MIAMI-DADE COUNTY

BUILDING CODE COMPLIANCE OFFICE (BCCO)
PRODUCT CONTROL DIVISION

MIAMI-DADE COUNTY, FLORIDA
METRO-DADE FLAGLER BUILDING
140 WEST FLAGLER STREET, SUITE 1603
MIAMI, FLORIDA 33130-1563
(305) 375-2901 FAX (305) 375-2908
www.miamidade.gov/buildingcode

NOTICE OF ACCEPTANCE (NOA)

Kawneer Company, Inc.
555 Guthridge Court
Norcross, Georgia 30092

SCOPE:

This NOA is being issued under the applicable rules and regulations governing the use of construction materials. The documentation submitted has been reviewed by Miami-Dade County Product Control Division and accepted by the Board of Rules and Appeals (BORA) to be used in Miami Dade County and other areas where allowed by the Authority Having Jurisdiction (AHJ).

This NOA shall not be valid after the expiration date stated below. The Miami-Dade County Product Control Division (In Miami Dade County) and/or the AHJ (in areas other than Miami Dade County) reserve the right to have this product or material tested for quality assurance purposes. If this product or material fails to perform in the accepted manner, the manufacturer will incur the expense of such testing and the AHJ may immediately revoke, modify, or suspend the use of such product or material within their jurisdiction. BORA reserves the right to revoke this acceptance, if it is determined by Miami-Dade County Product Control Division that this product or material fails to meet the requirements of the applicable building code.

This product is approved as described herein, and has been designed to comply with the Florida Building Code, including High Velocity Hurricane Zone of the Florida Building Code.

DESCRIPTION: Series "2000T" Inswing Aluminum Door-L. M. Impact

APPROVAL DOCUMENT: Drawing No. **06-KAW-0002,** titled "2000T Inswing Terrace Door", sheets 1 through 13 of 13, prepared by Engineering Express, Consulting Engineers, dated 07/17/06 and last revised on 03/16/2009, signed and sealed by Frank L. Bennardo, P.E., bearing the Miami-Dade County Product Control Revision stamp with the Notice of Acceptance number and expiration date by the Miami-Dade County Product Control Division.

MISSILE IMPACT RATING: Large and Small Missile Impact Resistant

LABELING: Each unit shall bear a permanent label with the manufacturer's name or logo, city, state and following statement: "Miami-Dade County Product Control Approved", unless otherwise noted herein.

RENEWAL of this NOA shall be considered after a renewal application has been filed and there has been no change in the applicable building code negatively affecting the performance of this product.

TERMINATION of this NOA will occur after the expiration date or if there has been a revision or change in the materials, use, and/or manufacture of the product or process. Misuse of this NOA as an endorsement =- f any product, for sales, advertising or any other purposes shall automatically terminate this NOA. Failure to comply with any section of this NOA shall be cause for termination and removal of NOA.

ADVERTISEMENT: The NOA number preceded by the words Miami-Dade County, Florida, and followed by the expiration date may be displayed in advertising literature. If any portion of the NOA is displayed, then it shall be done in its entirety.

INSPECTION: A copy of this entire NOA shall be provided to the user by the manufacturer or its distributors and shall be available for inspection at the job site at the request of the Building Official.

This NOA **revises** NOA # **06-0803.01** consists of this page 1 and evidence page E-1, as well as approval document mentioned above.

The submitted documentation was reviewed by **Ishaq I. Chanda, P.E.**

MIAMI-DADE COUNTY APPROVED

4/1/19

NOTICE OF ACCEPTANCE: EVIDENCE SUBMITTED

A. DRAWINGS (transferred from file # **06-0803.01**)

1. Manufacturer's die drawings and sections.
2. Drawing No. **06-KAW-0002,** titled "2000T Inswing Terrace Door", sheets 1 through 13 of 13, prepared by Engineering Express, Consulting Engineers, dated 07/17/06 and last revised on 03/16/2009, signed and sealed by Frank L. Bennardo, P.E.

B. TESTS (transferred from file # **06-0803.01**)

1. Test reports on 1) Air Infiltration Test, per FBC, TAS 202-94
   2) Uniform Static Air Pressure Test, Loading per FBC, TAS 202-94
   3) Water Resistance Test, per FBC, TAS 202-94
   4) Forced Entry Test, per FBC 2411 3.2.1 and TAS 202-94
   5) Large Missile impact Test per FBC, TAS 201-94
   6) Cyclic Wind Pressure Loading per FBC, TAS 203-94

Along with marked-up drawings and installation diagram of aluminum Inswing /out swing door, prepared by Hurricane Testing Laboratory Inc, Test Report No. **HTL-G0049-0905-04** dated 01/13/05, signed & sealed by Vinu J. Abraham, P.E.

C. CALCULATIONS (transferred from file # **06-0803.01**)

1. Anchor verification calculations complying w/ FBC-2007, dated March 15, 2007 and last revised on 03/25/2009, prepared, signed and sealed by Frank L. Bennardo, P.E.
2. Glazing complies with ASTME-1300-02and ASTME-1300-04

D. QUALITY ASSURANCE BY:

1. Miami-Dade Building Code Compliance Office (BCCO).

E. MATERIAL CERTIFICATIONS

1. Test report # 06520.02-106-18 issued by Architectural testing dated 12/1/06 for Ensinger Inc's "Insulbar" per ASTM G155 (xenon Arch) accelerated weathering, Tensile test per ASTMD-638, rate of burning per ASTM635, smoke density per ASTM D-2843 and self ignition per ASTM D1929, signed and sealed by Joseph Reed, P.E. (transferred from file # **06-0803.01)**
2. Notice of Acceptance No. **05-1208.02** issued to E.I. DuPont DeNemours, for "DuPont Butacite ® PVB", expiring on 12/11/2010
3. Notice of Acceptance No. **06-0216.06** issued to Solutia, for "Saflex IIIG clear & color interlayer", expiring on 05/21/2011

F. STATEMENTS

1. Statement letter complying w/ FBC-2007, dated 01-12-2009, prepared, signed and sealed by Frank L. Bennardo, P. E.

G.

2. Statement letters of conformance to FBC 2004 and "No financial interest", both dated January 12, 2006, signed and sealed by Frank L. Bennardo, P.E. (transferred from file # **06-0803.01)**
3. Statement of compliance, issued as part of the above referenced test report issued by Hurricane Testing Laboratory.

H. OTHER

1. This NOA **revises** NOA # **06-0803.01,** expired on April 26, 2012.
2. "Insulbar" by Ensinger compliance to plastic component requirements per FBC.
3. Test proposal approved by BCCO dated 01/16/2003.

Ishaq I. Chanda

Ishaq I. Chanda, P.E.
Product Control Examiner
NOA No 09-0121.08
Expiration Date: April 26, 2012
Approval Date: April 22, 2009

2000T INSWING TERRACE DOOR

LARGE MISSILE IMPACT

MIAMI-DADE COUNTY PRODUCT APPROVAL
KAWNEER 2000T TERRACE DOOR
INSWING DOOR, SINGLE OR PAIR
LARGE MISSILE IMPACT RESISTANT
9/16" H.S. LAMINATED GLASS (FOR GLASS TYPES, REFER TO GLAZING SCHEDULE ON THIS SHEET)

DESIGN PRESSURE = +100 / -100 PSF
(GLASS TYPES 1, 2 OR 3)

DESIGN PRESSURE = +65 / -65 PSF
(GLASS TYPES 4 OR 5)

GENERAL NOTES

1. THE SYSTEM DESCRIBED HEREIN HAS BEEN DESIGNED AND TESTED IN ACCORDANCE WITH THE 2007 FLORIDA BUILDING CODE, FOR USE WITHIN THE HIGH VELOCITY HURRICANE ZONE, PER TAS 201 / 202 / 203 & ASTM E1300-98 STANDARDS.
2. NO 33-1/3% INCREASE IN ALLOWABLE STRESS HAS BEEN USED IN THE DESIGN OF THIS SYSTEM. WIND LOAD DURATION FACTOR Cd=1.6 HAS BEEN USED FOR WOOD ANCHOR DESIGN.
3. POSITIVE AND NEGATIVE DESIGN PRESSURES CALCULATED FOR USE WITH THIS SYSTEM SHALL BE DETERMINED BY OTHERS ON A JOB-SPECIFIC BASIS IN ACCORDANCE WITH THE GOVERNING CODE.
4. THE SYSTEM DETAILED HEREIN IS GENERIC AND DOES NOT PROVIDE INFORMATION FOR A SPECIFIC SITE. FOR SITE CONDITIONS DIFFERENT FROM THE CONDITIONS DETAILED HEREIN, A LICENSED ENGINEER OR REGISTERED ARCHITECT SHALL PREPARE SITE SPECIFIC DOCUMENTS FOR USE IN CONJUNCTION WITH THIS DOCUMENT OUTSIDE THE HVHZ. WITHIN THE HVHZ, DEVIATION FROM THIS NOA REQUIRES A ONE TIME NOA FROM THE MIAMI-DADE BULDIN CODE COMPLIANCE OFFICE.
5. PERMIT HOLDER SHALL VERIFY THE ADEQUACY OF THE EXISTING STRUCTURE TO WITHSTAND SUPERIMPOSED LOADS. WOOD BUCKS (BY OTHERS) SHALL BE ANCHORED PROPERLY TO TRANSFER LOADS TO THE EXISTING STRUCTURE.
6. ALL EXTRUSIONS SHALL BE 6063-T6 ALUMINUM ALLOY, UNLESS NOTED OTHERWISE.
7. UNITS GLAZED WITH 9/16" LAMINATED GLASS ARE LARGE MISSILE IMPACT RESISTANT AND DO NOT REQUIRE IMPACT RESISTANT SHUTTERS.
8. ALLOWABLE CONFIGURATIONS: SINGLE INSWING DOOR OR DOUBLE INSWING DOOR.
9. EXTERIOR SEAM OF FRAME CORNERS SHALL BE SEALED WITH SILICONE.
10. ALL BOLTS & WASHERS SHALL BE ZINC COATED STEEL, GALVANIZED STEEL, OR STAINLESS STEEL WITH A MINIMUM TENSILE YIELD STRENGTH OF 60 KSI.
11. ALL STEEL IN CONTACT WITH ALUMINUM SHALL BE PAINTED OR PLATED AS PRESCRIBED IN THE ABOVE-NOTED BUILDING CODE.

GLAZING SCHEDULE

TYPE	NOMINAL THICKNESS	TYPICAL THICKNESS	DESCRIPTION
1	9/16"	.506"	1/4" HS OUTBOARD / 0.075" SOLUTIA VANCEVA PVB / 1/4" HS INBOARD
2	9/16"	.506"	1/4" HS OUTBOARD / 0.100" VIRACON-STORMGUARD / 1/4" HS INBOARD
3	9/16"	.506"	1/4" HS OUTBOARD / 0.100" DUPONT SGP INTERLAYER / 1/4" HS INBOARD
4	9/16"	.506"	1/4" HS OUTBOARD / 0.090" SOLUTIA SAFLEX PVB / 1/4" HS INBOARD
5	9/16"	.506"	1/4" HS OUTBOARD / 0.090" DUPONT BUTACITE PVB / 1/4" HS INBOARD

PRODUCT REVISED
as complying with the Florida Building Code
Acceptance No. 09-0121.08
Expiration Date APR 26, 2012
By Shang J. Chang
Miami Dade Product Control Division

FRANK L. BENNARDO, P.E.
PE0046549
03/16/2009

ENGINEERING EXPRESS®
160 SW 12th AVENUE, #106
DEERFIELD BEACH, FL 33442
PH: (954) 354-0660 FAX: (954) 354-0443
WWW.ENGEXP.COM
CERT OF AUTH #9885
A FRANK L. BENNARDO, P.E., INC.

KAWNEER
AN ALCOA COMPANY
555 GUTHRIDGE COURT
NORCROSS, GEORGIA 30092
PHONE (770) 449-5555
FAX (770) 734-1560

2000T INSWING TERRACE DOOR
LARGE MISSILE IMPACT
SINGLE DOOR OR PAIR OF DOORS

REMARKS	DRWN	CHKD	DATE
INIT ISSUE	CL	FLB	7/17/06
REVISION	JEM	CL	03/09/07
'07 FBC UPDATE	RKB	CL	12/17/08

06-KAW-0002
SCALE: -
PAGE DESCRIPTION:

03/16/2009 - 1:47pm rbartlett F:\01 Project Files\Kawneer (KAW)\2006 Jobs\06-KAW-0002 2000T Terrace Door (NOA) Large Missile, Inswing\06-KAW-0002_01b 2000T Terrace Door (NOA) Large Missile, Inswing.dwg

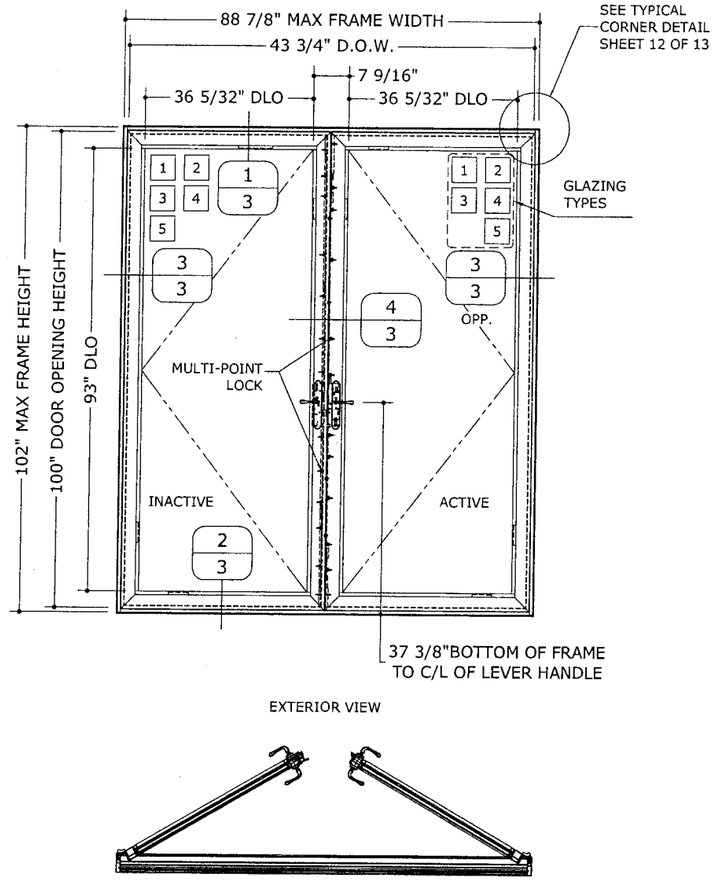

1/2 DOUBLE INSWING DOOR
N.T.S. ELEVATION

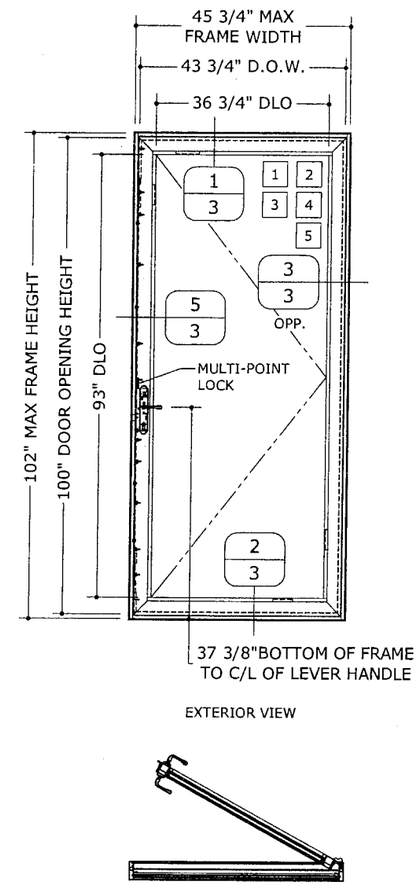

1/2 SINGLE INSWING DOOR
N.T.S. ELEVATION

PRODUCT REVISED
as complying with the Florida
Building Code
Acceptance No 09-0121.08
Expiration Date APRIL 26, 2012
By Ishaq I. Chanda
Miami Dade Product Control
Division

FRANK L. BENNARDO, P.E.
PE0046549
FL
03/16/2009

ENGINEERING EXPRESS®
160 SW 12th AVENUE, #106
DEERFIELD BEACH, FL 33442
PH: (954) 354-0660 FAX: (954) 354-0443
WWW.ENGEXP.COM
CERT OF AUTH #9885
A. FRANK L. BENNARDO, P.E., INC. INNOVATION

555 GUTHRIDGE COURT
NORCROSS, GEORGIA 30092
PHONE (770) 449-5555
FAX (770) 734-1560

KAWNEER
AN ALCOA COMPANY

2000T INSWING TERRACE DOOR
LARGE MISSILE IMPACT
SINGLE DOOR OR PAIR OF DOORS

REMARKS	DRWN	CHKD	DATE
INIT ISSUE	CL	FLB	7/17/06
REVISION	JEM	CL	03/09/07
'07 FBC UPDATE	RKB	CL	12/17/08
-	-	-	-
-	-	-	-

06-KAW-0002
SCALE: - 01
PAGE DESCRIPTION:
-
-

13
2

03/16/2009 - 1:47pm rbartlett F:\01 Project Files\Kawneer (KAW)\2006 Jobs\06-KAW-0002 2000T Terrace Door (NOA) Large Missile, Inswing\06-KAW-0002_01b 2000T Terrace Door (NOA) Large Missile, Inswing.dwg

INSWING DOOR SECTIONS

* SEE THERMAL BREAK DETAIL ON SHEET 12 OF 13
** 6" FROM EACH END AND 16" O.C. MAX.
*** 3" FROM EACH END AND 18" O.C. MAX.
**** 12" LONG AT BOTTOM OF EACH VERTICAL RAIL

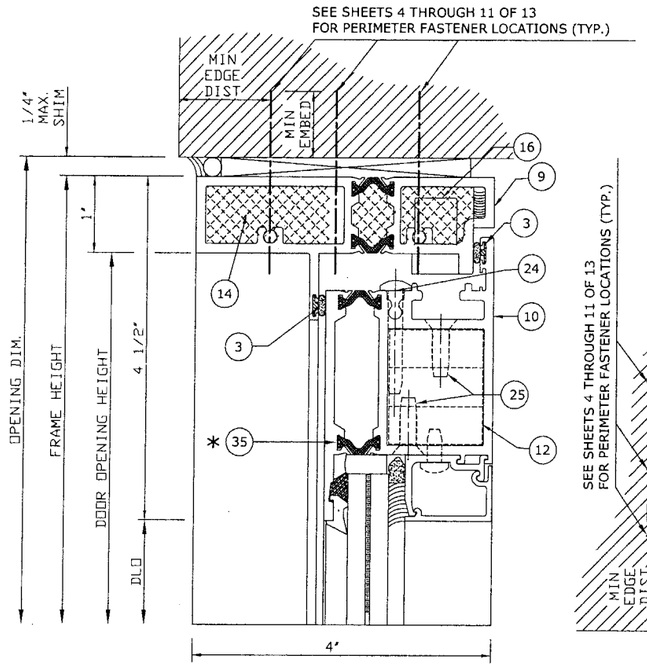

EXTERIOR

1/3

HEAD

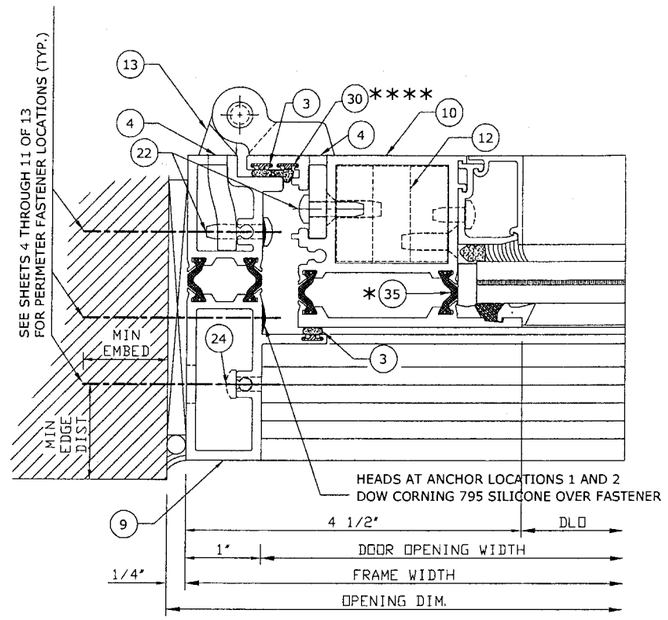

EXTERIOR

3/3

HINGE JAMB

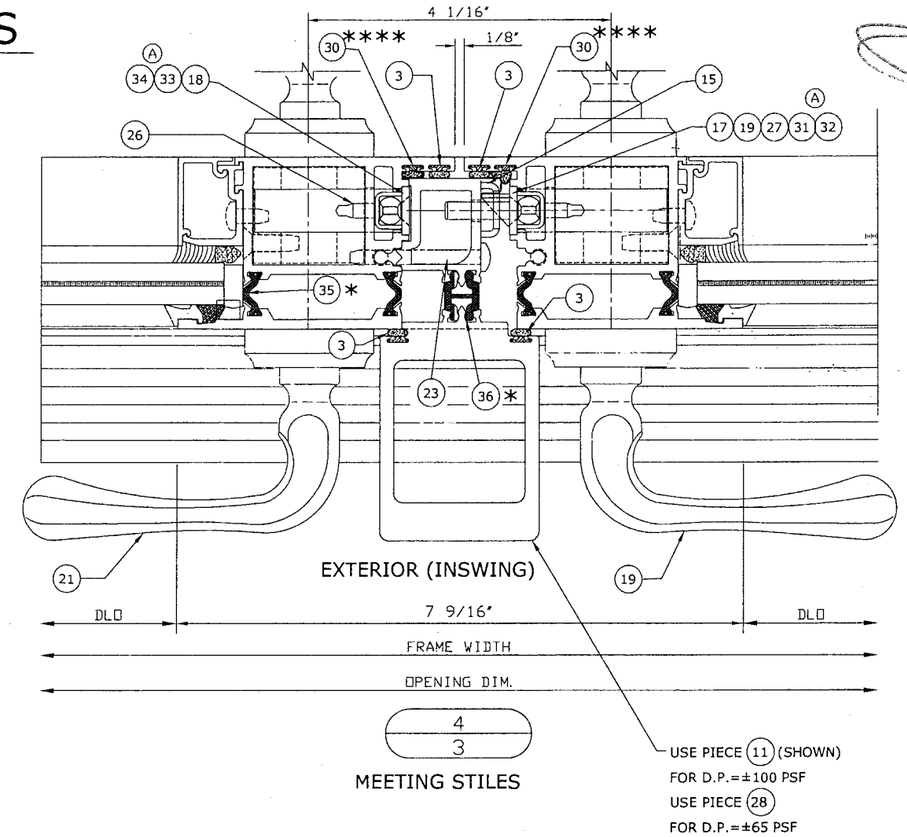

4/3

MEETING STILES

EXTERIOR

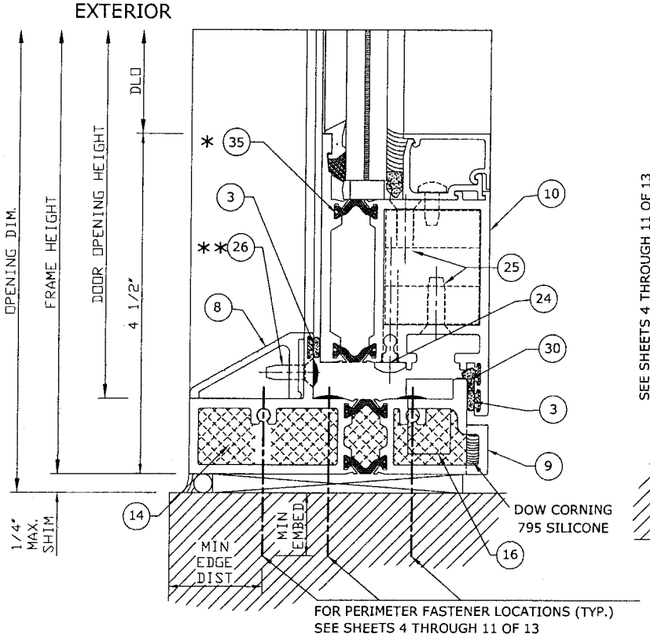

2/3

SILL

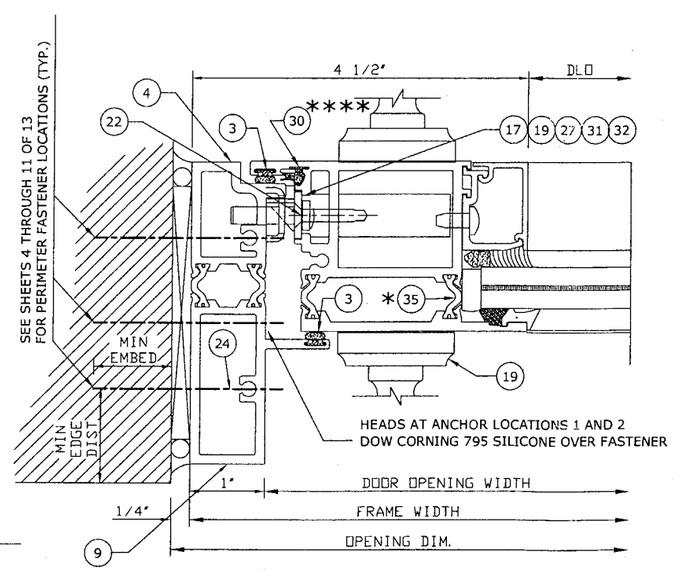

EXTERIOR

5/3

LOCK JAMB

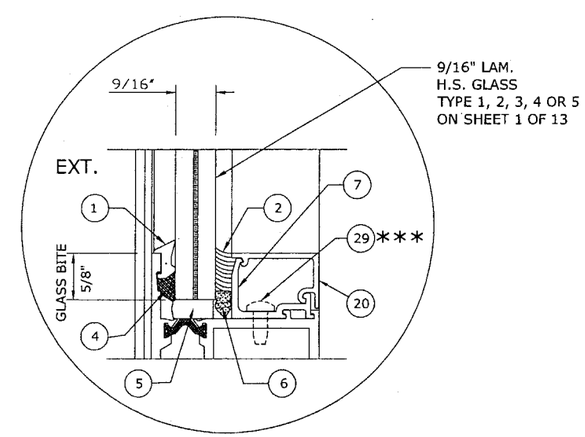

GLAZING DETAIL

9/16" LAMINATED H.S. GLASS

PRODUCT REVISED
as complying with the Florida Building Code
Acceptance No 09-0121.08
Expiration Date APRIL 26, 2012
By Ishaq I. Chanda
Miami Dade Product Control Division

FRANK L. BENNARDO, P.E.
PE0046549
03/16/2009

ENGINEERING EXPRESS®
160 SW 12th AVENUE, #106
DEERFIELD BEACH, FL 33442
PH: (954) 354-0660 FAX: (954) 354-0443
WWW.ENGEXP.COM
CERT OF AUTH #9885
A. FRANK L. BENNARDO, P.E., INC. INNOVATION

KAWNEER AN ALCOA COMPANY
555 GUTHRIDGE COURT
NORCROSS, GEORGIA 30092
PHONE (770) 449-5555
FAX (770) 734-1560

2000T INSWING TERRACE DOOR
LARGE MISSILE IMPACT
SINGLE DOOR OR PAIR OF DOORS

REMARKS	DRWN	CHKD	DATE
INIT ISSUE	CL	FLB	7/17/06
REVISION	JEM	CL	03/09/07
'07 FBC UPDATE	RKB	CL	12/17/08

06-KAW-0002

SCALE: - 01

PAGE DESCRIPTION:
-
-

03/16/2009 - 1:47pm rbartlett F:\01 Project Files\Kawneer (KAW)\2006 Jobs\06-KAW-0002 2000T Terrace Door (NOA) Large Missile, Inswing\06-KAW-0002_01b 2000T Terrace Door (NOA) Large Missile, Inswing.dwg

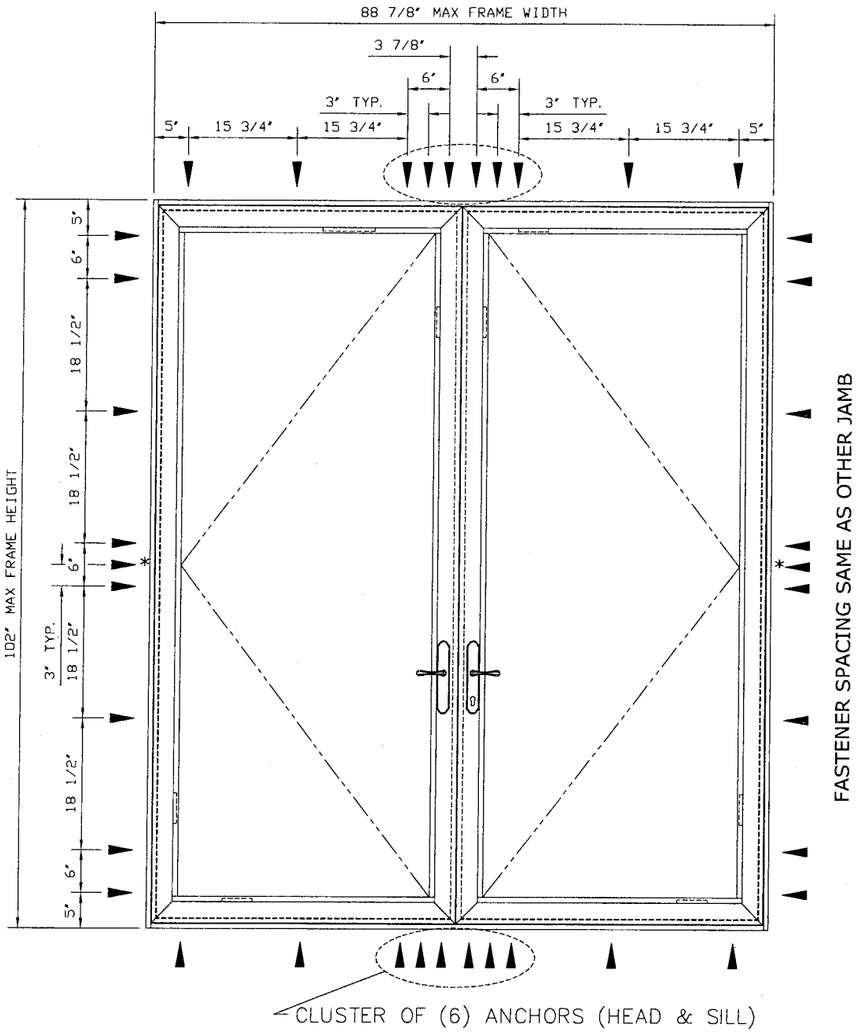

FASTENER SPACING SAME AS HEAD

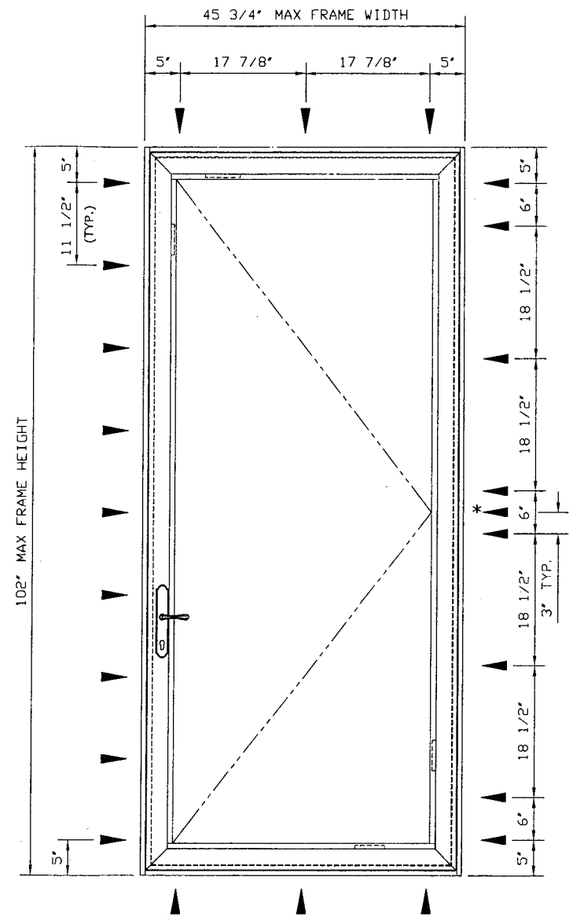

FASTENER SPACING SAME AS HEAD

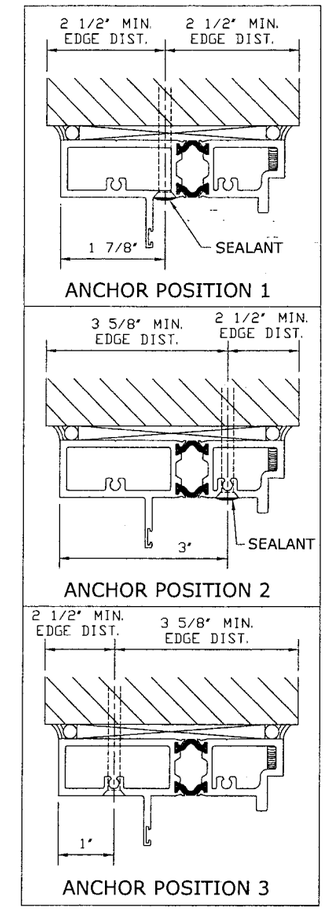

ANCHOR POSITIONS

REF FASTENER SCHEDULE BELOW

ANCHOR NOTES:

1. SEE EXTERIOR ELEVATION FOR ANCHOR LOCATIONS AND/OR SPACING.
2. ANCHORS SHALL BE INSTALLED IN ACCORDANCE WITH MANUFACTURERS' RECOMMENDATIONS.
3. TAPCONS SHALL BE MANUFACTURED BY ITW.
4. ENSURE MINIMUM 2-1/2" EDGE DISTANCE FOR ALL ANCHORS TO CONCRETE & TO HOLLOW BLOCK. ENSURE 1-1/4" MIN EMBEDMENT TO HOLLOW BLOCK OR 1-3/4" MIN EMBEDMENT TO CONCRETE.
5. MINIMUM EMBEDMENT AND EDGE DISTANCE EXCLUDES STUCCO, FOAM, BRICK, AND OTHER WALL FINISHES.

PERIMETER FASTENER LOCATIONS

CONCRETE (3320psi MIN) OR HOLLOW BLOCK SUBSTRATES (C-90)

DESIGN PRESSURE = ±65 PSF (GLAZING TYPE 4 OR 5)

CONCRETE/BLOCK ANCHOR SCHEDULE

▼ 1/4" ITW TAPCON

ANCHOR POSITIONS 1, 2, OR 3

* THESE PERIMETER FASTENERS TO GO THROUGH BUTT HINGE FOR ANCHOR POSITION 2

PRODUCT REVISED
as complying with the Florida Building Code
Acceptance No 09-0121.08
Expiration Date APRIL 26, 2012
By Ishaq I. Chand
Miami Dade Product Cont. Division

FRANK L. BENNARDO, P.E.
PE0046549
03/16/2009

ENGINEERING EXPRESS®
160 SW 12th AVENUE, #106
DEERFIELD BEACH, FL 33442
PH: (954) 354-0660 FAX: (954) 354-0443
WWW.ENGEXP.COM
CERT OF AUTH #9885
A FRANK L. BENNARDO, P.E., INC. INNOVATION

KAWNEER
AN ALCOA COMPANY
555 GUTHRIDGE COURT
NORCROSS, GEORGIA 30092
PHONE (770) 449-5555
FAX (770) 734-1560

2000T INSWING TERRACE DOOR
LARGE MISSILE IMPACT
SINGLE DOOR OR PAIR OF DOORS

REMARKS	DRWN	CHKD	DATE
INIT ISSUE	CL	FLB	7/17/06
REVISION	JEM	CL	03/09/07
'07 FBC UPDATE	RKB	CL	12/17/08

06-KAW-0002
SCALE: - 01
PAGE DESCRIPTION:

03/16/2009 - 1:47pm rbartlett F:\01 Project Files\Kawneer (KAW)\2006 Jobs\06-KAW-0002 2000T Terrace Door (NOA) Large Missile, Inswing\06-KAW-0002_01b 2000T Terrace Door (NOA) Large Missile, Inswing.dwg

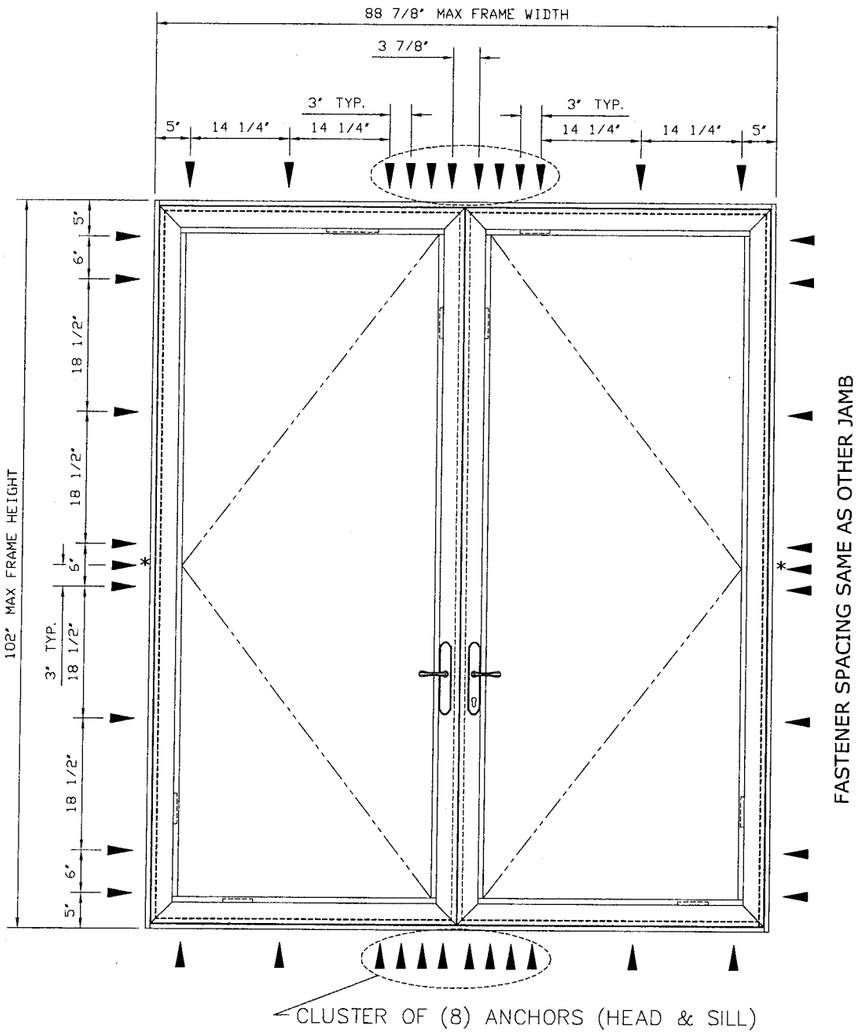

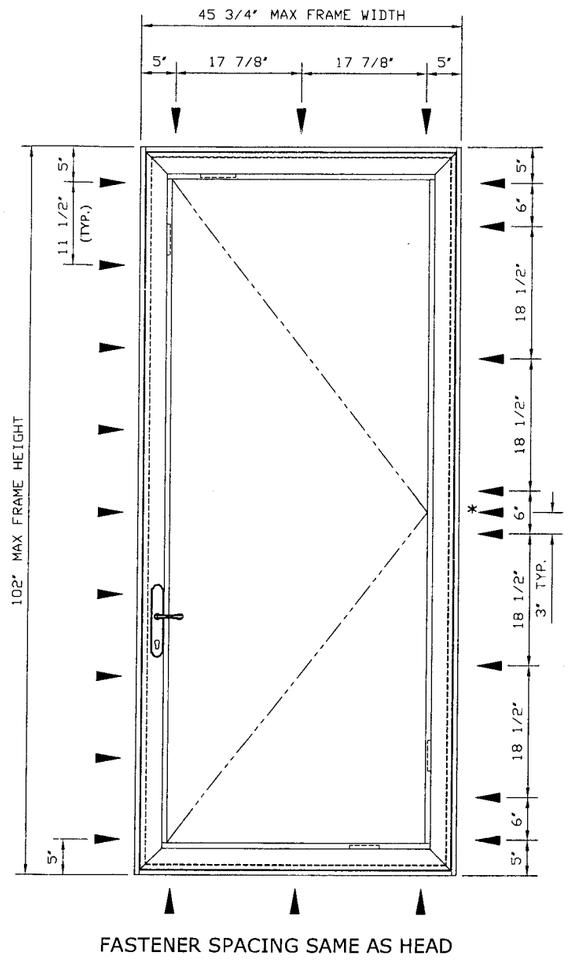

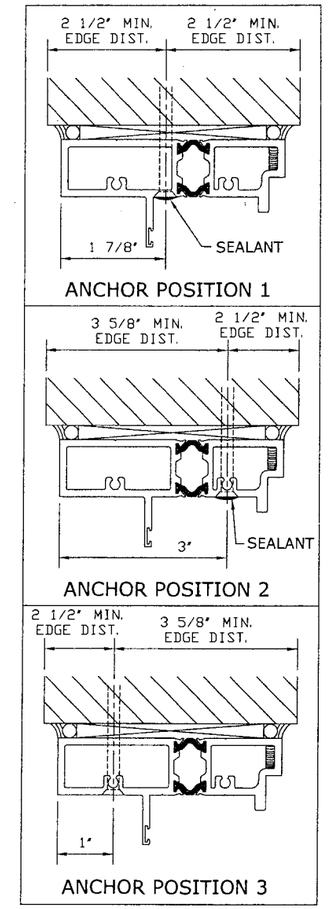

ANCHOR POSITIONS

REF FASTENER SCHEDULE BELOW

ANCHOR NOTES:

FASTENER SPACING SAME AS HEAD

1. SEE EXTERIOR ELEVATION FOR ANCHOR LOCATIONS AND/OR SPACING.
2. ANCHORS SHALL BE INSTALLED IN ACCORDANCE WITH MANUFACTURERS' RECOMMENDATIONS.
3. TAPCONS SHALL BE MANUFACTURED BY ITW.
4. ENSURE MINIMUM 2-1/2" EDGE DISTANCE FOR ALL ANCHORS TO CONCRETE & TO HOLLOW BLOCK. ENSURE 1-1/4" MIN EMBEDMENT TO HOLLOW BLOCK OR 1-3/4" MIN EMBEDMENT TO CONCRETE.
5. MINIMUM EMBEDMENT AND EDGE DISTANCE EXCLUDES STUCCO, FOAM, BRICK, AND OTHER WALL FINISHES.

PERIMETER FASTENER LOCATIONS

CONCRETE (3320psi MIN) OR HOLLOW BLOCK SUBSTRATES (C-90)

DESIGN PRESSURE = ±100 PSF (GLAZING TYPE 1, 2, OR 3)

CONCRETE/BLOCK ANCHOR SCHEDULE

▼ 1/4" ITW TAPCON

ANCHOR POSITIONS 1, 2, OR 3

* THESE PERIMETER FASTENERS TO GO THROUGH BUTT HINGE FOR ANCHOR POSITION 2

PRODUCT REVISED
as complying with the Florida Building Code
Acceptance No 09-0121.08
Expiration Date APRIL 26, 2012
By Ishaq I. Chaudhary
Miami Dade Product Control Division

FRANK L. BENNARDO, P.E.
PE0046549
03/16/2009

ENGINEERING EXPRESS®
160 SW 12th AVENUE, #106
DEERFIELD BEACH, FL 33442
Ph: (954) 354-0660 Fax: (954) 354-0443
WWW.ENGEXP.COM
CERT OF AUTH #9885
A FRANK L. BENNARDO, P.E., INC. INNOVATION

KAWNEER
AN ALCOA COMPANY
555 GUTHRIDGE COURT
NORCROSS, GEORGIA 30092
PHONE (770) 449-5555
FAX (770) 734-1560

2000T INSWING TERRACE DOOR
LARGE MISSILE IMPACT
SINGLE DOOR OR PAIR OF DOORS

REMARKS	DRWN	CHKD	DATE
INIT ISSUE	CL	FLB	7/17/06
REVISION	JEM	CL	03/09/07
'07 FBC UPDATE	RKB	CL	12/17/08
.	.	.	.
.	.	.	.

06-KAW-0002

SCALE: - 01

PAGE DESCRIPTION:
-
-

13

5

03/16/2009 - 1:47pm rbartlett F:\01 Project Files\Kawneer (KAW)\2006 Jobs\06-KAW-0002 2000T Terrace Door (NOA) Large Missile, Inswing\06-KAW-0002_01b 2000T Terrace Door (NOA) Large Missile, Inswing.dwg

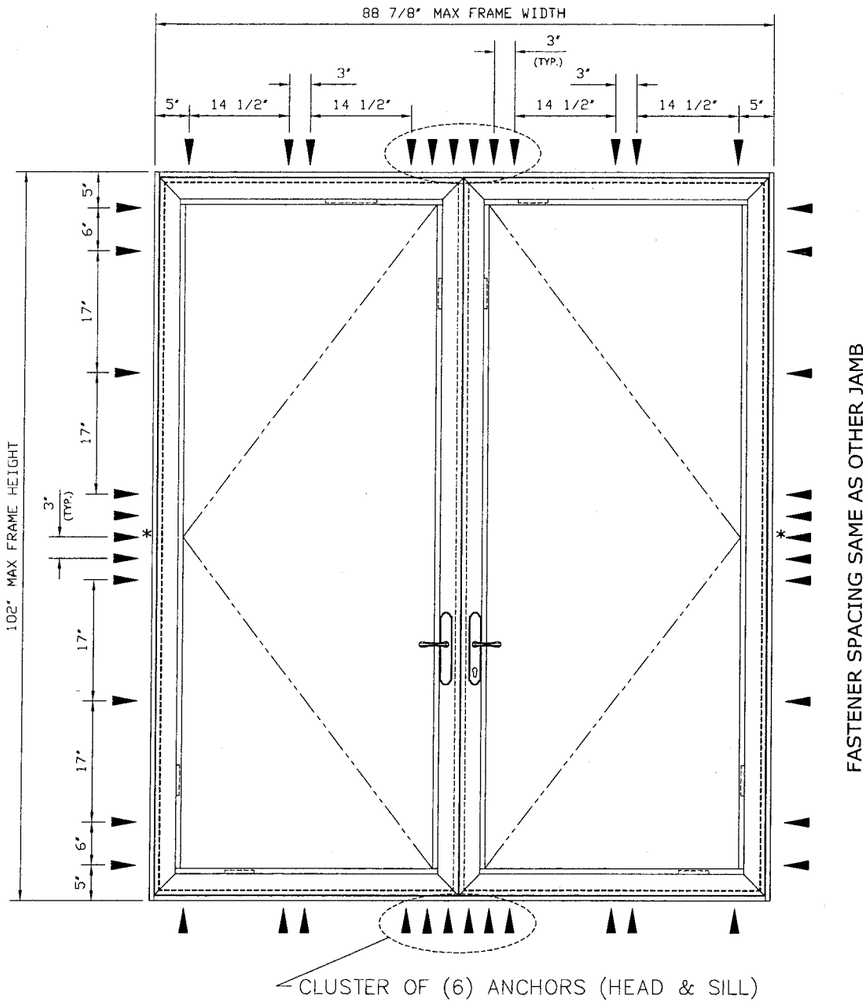

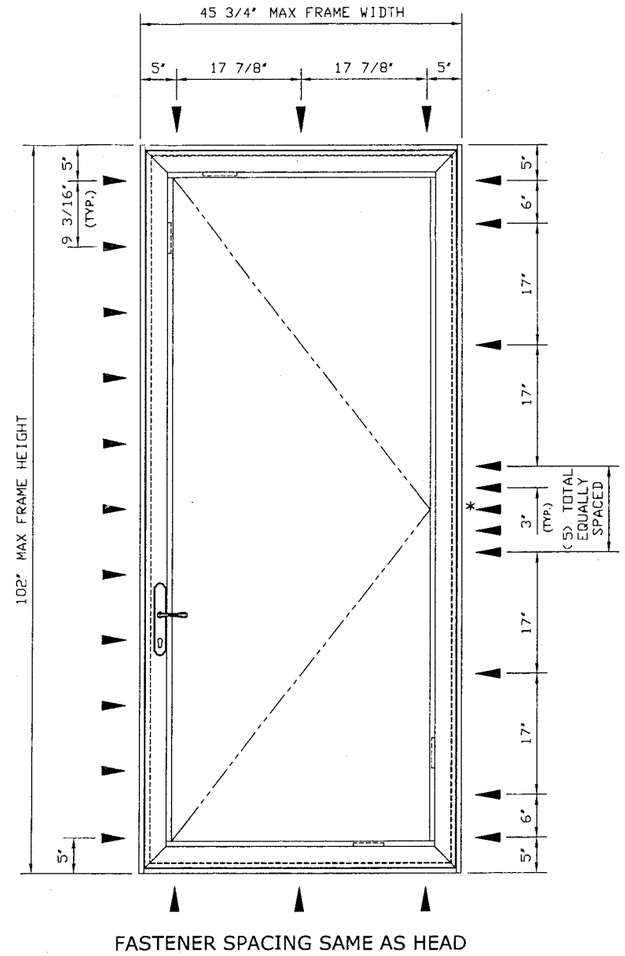

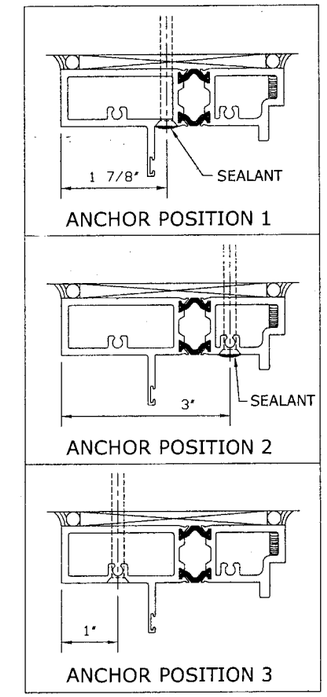

ANCHOR POSITIONS

REF FASTENER SCHEDULE BELOW

ANCHOR NOTES:

1. SEE EXTERIOR ELEVATION FOR ANCHOR LOCATIONS AND/OR SPACING.
2. ANCHORS SHALL BE INSTALLED IN ACCORDANCE WITH MANUFACTURERS' RECOMMENDATIONS.
3. TAPCONS SHALL BE MANUFACTURED BY ITW.
4. ENSURE MINIMUM OF 1" EDGE DISTANCE AND 1-1/2" EMBEDMENT FOR ALL WOOD ANCHORS.
5. MINIMUM EMBEDMENT AND EDGE DISTANCE EXCLUDES STUCCO, FOAM, BRICK, AND OTHER WALL FINISHES.
5. WOOD HOST STRUCTURE SHALL BE "SOUTHERN PINE" G=0.55 OR GREATER DENSITY.
6. WHERE EXISTING STRUCTURE IS WOOD FRAMING, EXISTING CONDITIONS MAY VARY. FIELD VERIFY THAT FASTENERS ARE INTO ADEQUATE WOOD FRAMING MEMBERS, NOT INTO PLYWOOD.

PERIMETER FASTENER LOCATIONS

WOOD SUBSTRATE (SOUTHERN PINE, G=0.55)

DESIGN PRESSURE = ±65 PSF (GLAZING TYPE 4 OR 5)

WOOD ANCHOR SCHEDULE

#14 GRADE 5 WOOD SCREW, #14 GRADE 5 LAG SCREW, OR 1/4" ITW TAPCON

ANCHOR POSITIONS 1, 2, OR 3

* THESE PERIMETER FASTENERS TO GO THROUGH BUTT HINGE FOR ANCHOR POSITION 2

PRODUCT REVISED
as complying with the Florida Building Code
Acceptance No 09-0121.08
Expiration Date APRIL 26, 2012
By Ishaq I. Chunda
Miami Dade Product Control Division

FRANK L. BENNARDO, P.E.
PE0046549
03/16/2009

ENGINEERING EXPRESS®
160 SW 12th AVENUE, #106
DEERFIELD BEACH, FL 33442
Ph: (954) 354-0660 FAX: (954) 354-0443
WWW.ENGEXP.COM
CERT OF AUTH #9885
A FRANK L. BENNARDO, P.E., INC. INNOVATION

KAWNEER
AN ALCOA COMPANY
555 GUTHRIDGE COURT
NORCROSS, GEORGIA 30092
PHONE (770) 449-5555
FAX (770) 734-1560

2000T INSWING TERRACE DOOR
LARGE MISSILE IMPACT
SINGLE DOOR OR PAIR OF DOORS

REMARKS	DRWN	CHKD	DATE
INIT ISSUE	CL	FLB	7/17/06
REVISION	JEM	CL	03/09/07
'07 FBC UPDATE	RKB	CL	12/17/08
-	-	-	-
-	-	-	-

06-KAW-0002
SCALE: - 01
PAGE DESCRIPTION:
-
-

13

6

03/16/2009 - 1:48pm rbartlett F:\01 Project Files\Kawneer (KAW)\2006 Jobs\06-KAW-0002 2000T Terrace Door (NOA) Large Missile, Inswing\06-KAW-0002_01b 2000T Terrace Door (NOA) Large Missile, Inswing.dwg

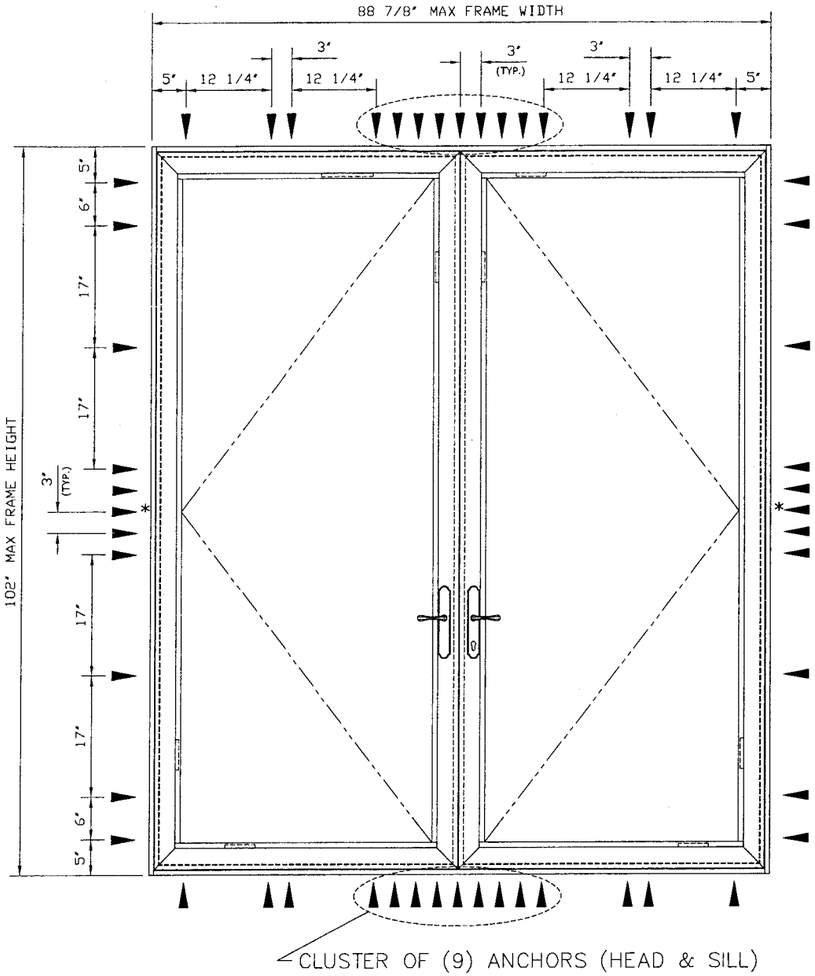

FASTENER SPACING SAME AS OTHER JAMB

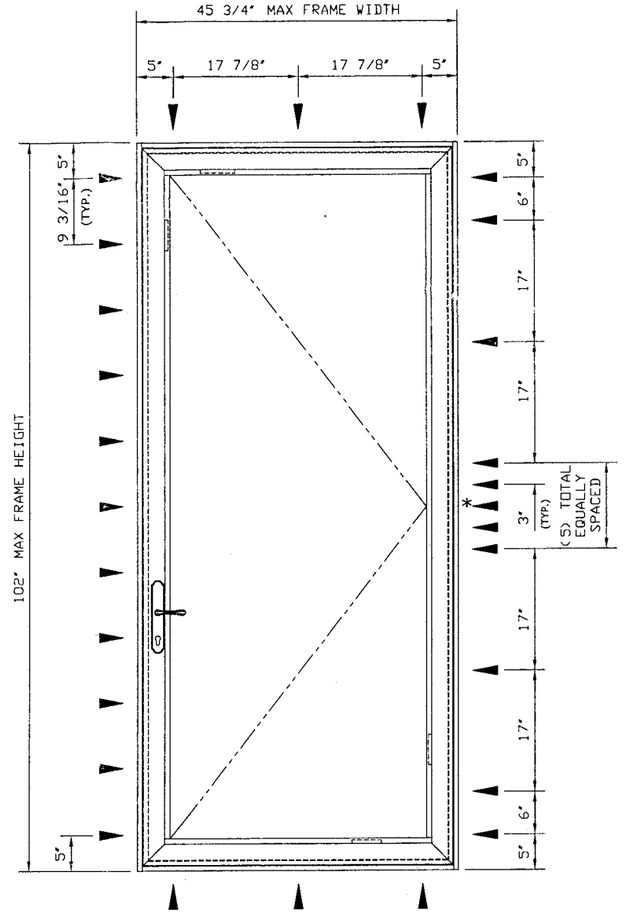

FASTENER SPACING SAME AS HEAD

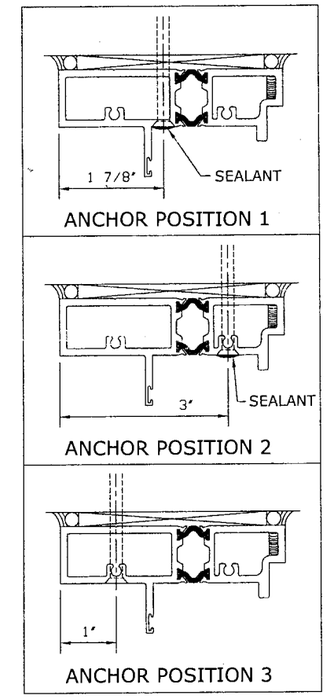

ANCHOR POSITIONS

REF FASTENER SCHEDULE BELOW

ANCHOR NOTES:

1. SEE EXTERIOR ELEVATION FOR ANCHOR LOCATIONS AND/OR SPACING.
2. ANCHORS SHALL BE INSTALLED IN ACCORDANCE WITH MANUFACTURERS' RECOMMENDATIONS.
3. TAPCONS SHALL BE MANUFACTURED BY ITW.
4. ENSURE MINIMUM OF 1" EDGE DISTANCE AND 1-1/2" EMBEDMENT FOR ALL WOOD ANCHORS.
5. MINIMUM EMBEDMENT AND EDGE DISTANCE EXCLUDES STUCCO, FOAM, BRICK, AND OTHER WALL FINISHES.
5. WOOD HOST STRUCTURE SHALL BE "SOUTHERN PINE" G=0.55 OR GREATER DENSITY.
6. WHERE EXISTING STRUCTURE IS WOOD FRAMING, EXISTING CONDITIONS MAY VARY. FIELD VERIFY THAT FASTENERS ARE INTO ADEQUATE WOOD FRAMING MEMBERS, NOT INTO PLYWOOD.

PERIMETER FASTENER LOCATIONS

WOOD SUBSTRATE (SOUTHERN PINE, G=0.55)

DESIGN PRESSURE = ±100 PSF (GLAZING TYPE 1, 2, OR 3)

WOOD ANCHOR SCHEDULE

#14 GRADE 5 WOOD SCREW, #14 GRADE 5 LAG SCREW, OR 1/4" ITW TAPCON

ANCHOR POSITIONS 1, 2, OR 3

* THESE PERIMETER FASTENERS TO GO THROUGH BUTT HINGE FOR ANCHOR POSITION 2

PRODUCT REVISED
as complying with the Florida Building Code
Acceptance No 09-0121.08
Expiration Date APRIL 26, 2012
By Shag L. Chandler
Miami Dade Product Control Division

FRANK L. BENNARDO, P.E.
PE0046549
03/16/2009

ENGINEERING EXPRESS®
160 SW 12th AVENUE, #106
DEERFIELD BEACH, FL 33442
PH: (954) 354-0660 FAX: (954) 354-0443
WWW.ENGEXP.COM
CERT OF AUTH #9885
A. FRANK L. BENNARDO, P.E., INC. INNOVATION

KAWNEER AN ALCOA COMPANY
555 GUTHRIDGE COURT
NORCROSS, GEORGIA 30092
PHONE (770) 449-5555
FAX (770) 734-1560

2000T INSWING TERRACE DOOR
LARGE MISSILE IMPACT
SINGLE DOOR OR PAIR OF DOORS

REMARKS	DRWN	CHKD	DATE
INIT ISSUE	CL	FLB	7/17/06
REVISION	JEM	CL	03/09/07
07 FBC UPDATE	RKB	CL	12/17/08
-	-	-	-
-	-	-	-

06-KAW-0002

SCALE: - 01

PAGE DESCRIPTION:
-
-

13

7

03/16/2009 - 1:48pm rbartlett F:\01 Project Files\Kawneer (KAW)\2006 Jobs\06-KAW-0002 2000T Terrace Door (NOA) Large Missile, Inswing\06-KAW-0002_01b 2000T Terrace Door (NOA) Large Missile, Inswing.dwg

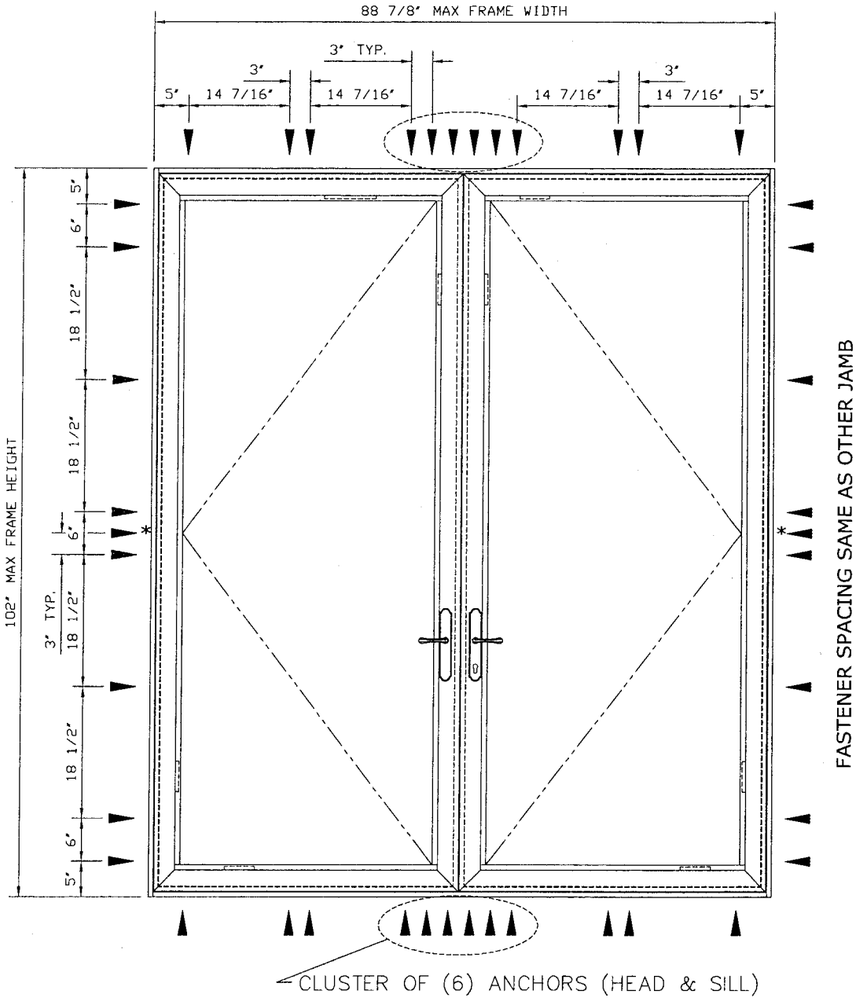

FASTENER SPACING SAME AS HEAD

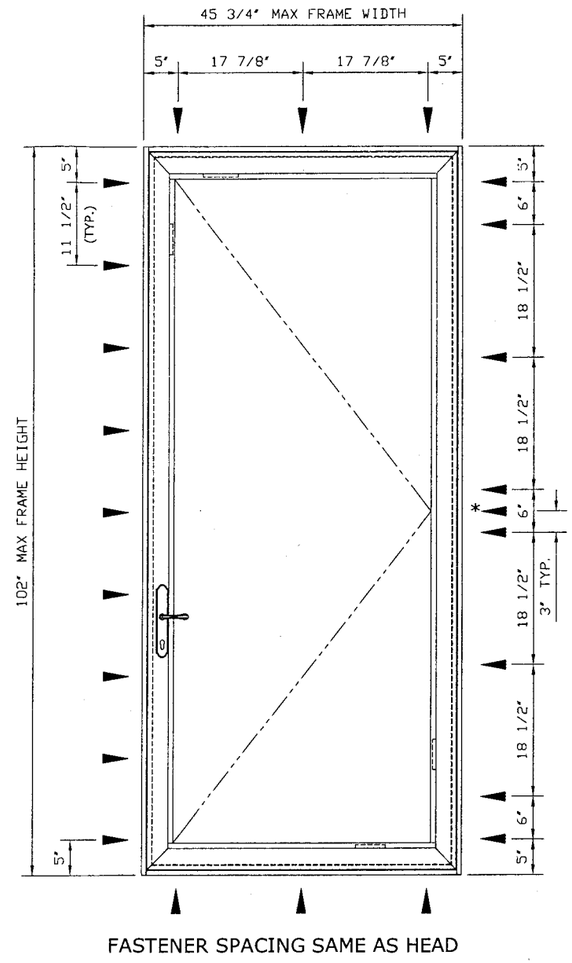

FASTENER SPACING SAME AS HEAD

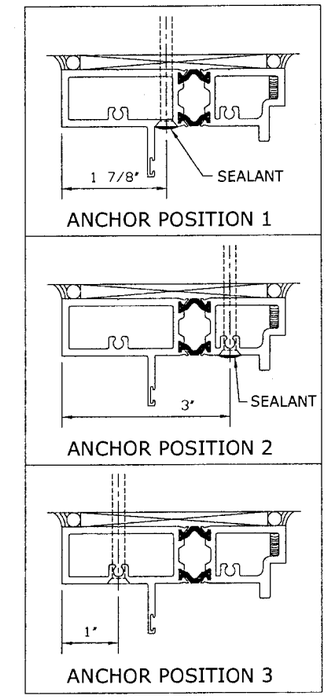

ANCHOR POSITIONS

REF FASTENER SCHEDULE BELOW

PERIMETER FASTENER LOCATIONS

ALUMINUM SUBSTRATE 6063-T6 (1/8" MIN THICKNESS)

DESIGN PRESSURE = ±65 PSF (GLAZING TYPE 4 OR 5)

* THESE PERIMETER FASTENERS TO GO THROUGH BUTT HINGE FOR ANCHOR POSITION 2

ANCHOR NOTES:

1. SEE EXTERIOR ELEVATION FOR ANCHOR LOCATIONS AND/OR SPACING.
2. ANCHORS SHALL BE INSTALLED IN ACCORDANCE WITH MANUFACTURERS' RECOMMENDATIONS.
3. ENSURE FULL THREAD ENGAGEMENT TO 1/8" MIN ALUMINUM SUBSTRATE. ENSURE MINIMUM OF 1/2" EDGE DISTANCE.
4. MINIMUM EMBEDMENT SHALL BE AS NOTED IN ANCHOR SCHEDULE. MINIMUM EMBEDMENT AND EDGE DISTANCE EXCLUDES STUCCO, FOAM, BRICK, AND OTHER WALL FINISHES.

ALUMINUM ANCHOR SCHEDULE

#14 GRADE 5 SHEET METAL SCREW

▼ ANCHOR POSITIONS 1, 2, OR 3

PRODUCT REVISED
as complying with the Florida Building Code
Acceptance No. 09-0121.08
Expiration Date APRIL 26, 2012
By Shaq I. Chanta
Miami-Dade Product Control Division

FRANK L. BENNARDO, P.E.
PE0046549
03/16/2009

ENGINEERING EXPRESS®
160 SW 12th AVENUE, #106
DEERFIELD BEACH, FL 33442
PH: (954) 354-0660 FAX: (954) 354-0443
WWW.ENGEXP.COM
CERT OF AUTH #9885
A. FRANK L. BENNARDO, P.E., INC. INNOVATION

KAWNEER AN ALCOA COMPANY
555 GUTHRIDGE COURT
NORCROSS, GEORGIA 30092
PHONE (770) 449-5555
FAX (770) 734-1560

2000T INSWING TERRACE DOOR
LARGE MISSILE IMPACT
SINGLE DOOR OR PAIR OF DOORS

REMARKS	DRWN	CHKD	DATE
INIT ISSUE	CL	FLB	7/17/06
REVISION	JEM	CL	03/09/07
07 FBC UPDATE	RKB	CL	12/17/08
-	-	-	-
-	-	-	-
-	-	-	-

06-KAW-0002

SCALE: - 01

PAGE DESCRIPTION:
-
-

13

8

03/16/2009 - 1:48pm rbartlett F:\01 Project Files\Kawneer (KAW)\2006 Jobs\06-KAW-0002 2000T Terrace Door (NOA) Large Missile, Inswing\06-KAW-0002_01b 2000T Terrace Door (NOA) Large Missile, Inswing.dwg

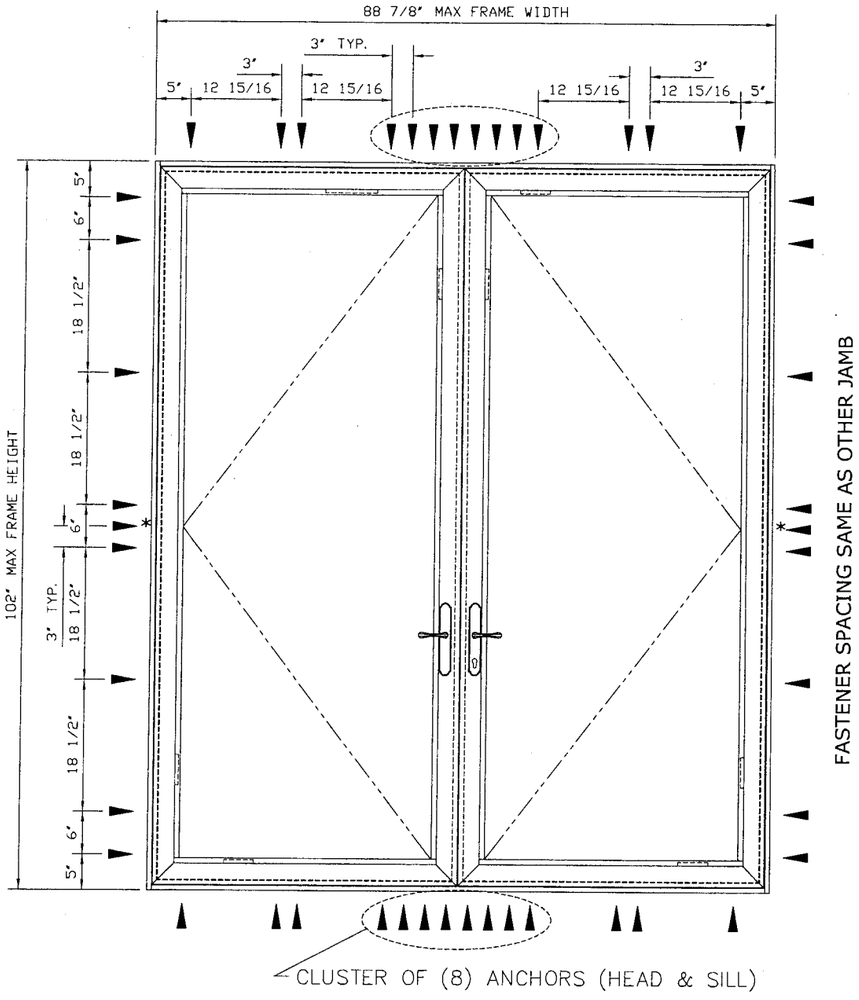

FASTENER SPACING SAME AS HEAD

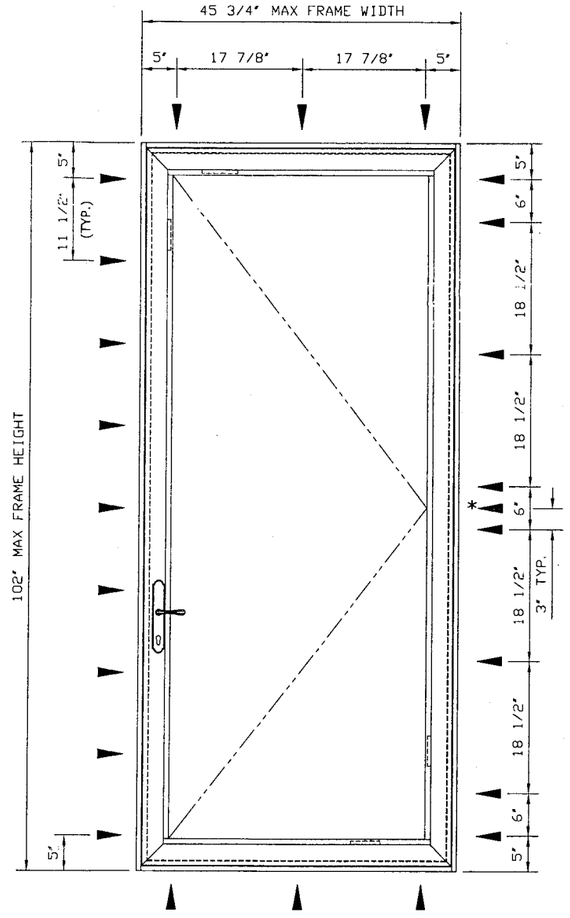

FASTENER SPACING SAME AS HEAD

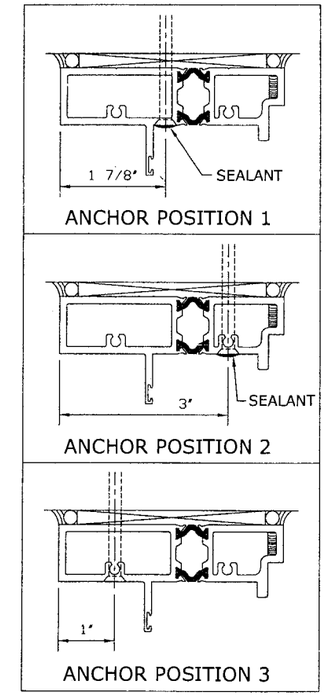

ANCHOR POSITIONS

REF FASTENER SCHEDULE BELOW

PERIMETER FASTENER LOCATIONS

ALUMINUM SUBSTRATE 6063-T6 (1/8" MIN THICKNESS)

DESIGN PRESSURE = ±100 PSF (GLAZING TYPE 1, 2, OR 3)

* THESE PERIMETER FASTENERS TO GO THROUGH BUTT HINGE FOR ANCHOR POSITION 2

ANCHOR NOTES:

1. SEE EXTERIOR ELEVATION FOR ANCHOR LOCATIONS AND/OR SPACING.
2. ANCHORS SHALL BE INSTALLED IN ACCORDANCE WITH MANUFACTURERS' RECOMMENDATIONS.
3. ENSURE FULL THREAD ENGAGEMENT TO 1/8" MIN ALUMINUM SUBSTRATE. ENSURE MINIMUM OF 1/2" EDGE DISTANCE.
4. MINIMUM EMBEDMENT SHALL BE AS NOTED IN ANCHOR SCHEDULE. MINIMUM EMBEDMENT AND EDGE DISTANCE EXCLUDES STUCCO, FOAM, BRICK, AND OTHER WALL FINISHES.

ALUMINUM ANCHOR SCHEDULE

#14 GRADE 5 SHEET METAL SCREW

▼ ANCHOR POSITIONS 1, 2, OR 3

PRODUCT REVISED
as complying with the Florida Building Code
Acceptance No. 09-0121.08
Expiration Date APRIL 26, 2012
By Ishaq I. Chaudhry
Miami Dade Product Control Division

FRANK L. BENNARDO, P.E.
PE0046549
03/16/2009

ENGINEERING EXPRESS®
160 SW 12th AVENUE, #106
DEERFIELD BEACH, FL 33442
PH: (954) 354-0660 FAX: (954) 354-0443
WWW.ENGEXP.COM
CERT OF AUTH #9885
A FRANK L. BENNARDO, P.E., INC. INNOVATION

KAWNEER
AN ALCOA COMPANY
555 GUTHRIDGE COURT
NORCROSS, GEORGIA 30092
PHONE (770) 449-5555
FAX (770) 734-1560

2000T INSWING TERRACE DOOR
LARGE MISSILE IMPACT
SINGLE DOOR OR PAIR OF DOORS

REMARKS	DRWN	CHKD	DATE
INIT ISSUE	CL	FLB	7/17/06
REVISION	JEM	CL	03/09/07
07 FBC UPDATE	RKB	CL	12/17/08

06-KAW-0002
SCALE: - 01
PAGE DESCRIPTION:

9 / 13

03/16/2009 - 1:48pm rbartlett F:\01 Project Files\Kawneer (KAW)\2006 Jobs\06-KAW-0002 2000T Terrace Door (NOA) Large Missile, Inswing\06-KAW-0002_01b 2000T Terrace Door (NOA) Large Missile, Inswing.dwg

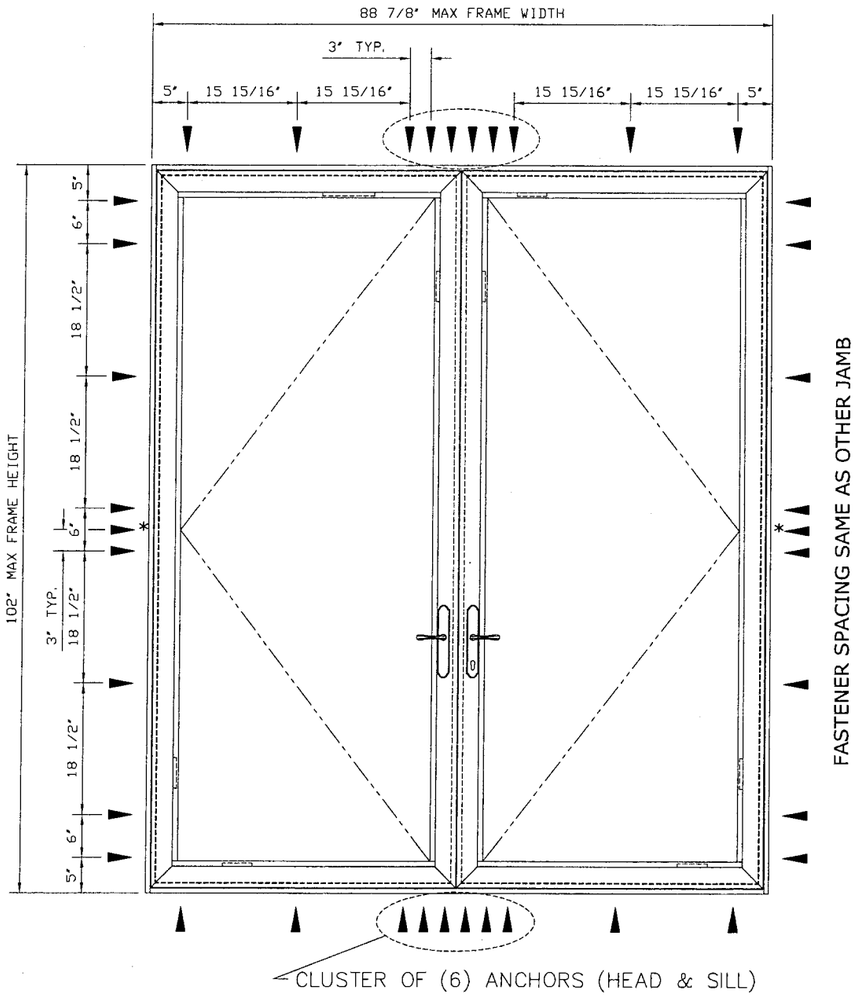

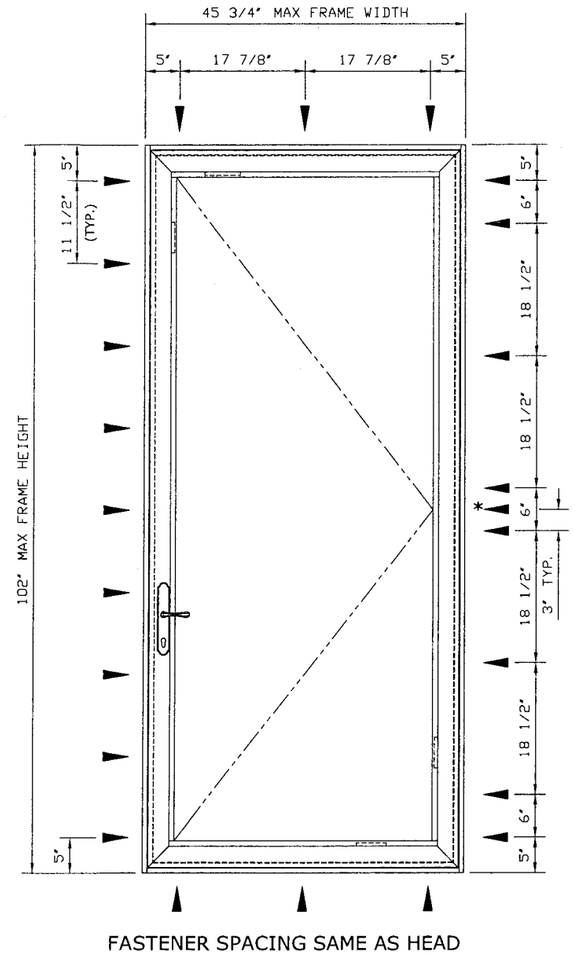

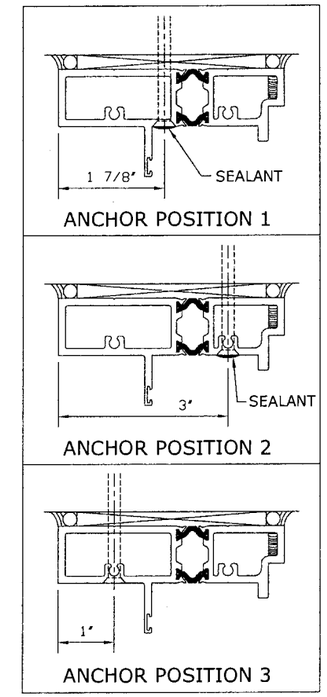

ANCHOR POSITIONS

REF FASTENER SCHEDULE BELOW

PERIMETER FASTENER LOCATIONS

A36 STEEL SUBSTRATE (1/8" MIN THICKNESS)

DESIGN PRESSURE = ±65 PSF (GLAZING TYPE 4 OR 5)

* THESE PERIMETER FASTENERS TO GO THROUGH BUTT HINGE FOR ANCHOR POSITION 2

ANCHOR NOTES:

1. SEE EXTERIOR ELEVATION FOR ANCHOR LOCATIONS AND/OR SPACING.
2. ANCHORS SHALL BE INSTALLED IN ACCORDANCE WITH MANUFACTURERS' RECOMMENDATIONS.
3. ENSURE FULL THREAD ENGAGEMENT TO 1/8" MIN STEEL SUBSTRATE. ENSURE MINIMUM OF 1" EDGE DISTANCE.
4. MINIMUM EMBEDMENT SHALL BE AS NOTED IN ANCHOR SCHEDULE. MINIMUM EMBEDMENT AND EDGE DISTANCE EXCLUDES STUCCO, FOAM, BRICK, AND OTHER WALL FINISHES.

STEEL ANCHOR SCHEDULE

#14 GRADE 5 SHEET METAL SCREW

▼ ANCHOR POSITIONS 1, 2, OR 3

PRODUCT REVISED
as complying with the Florida Building Code
Acceptance No. 09-0121.08
Expiration Date APRIL 26, 2012
By Ishaq I. Chanda
Miami Dade Product Control Division

FRANK L. BENNARDO, P.E.
PE0046549
03/16/2009

ENGINEERING EXPRESS®
160 SW 12th AVENUE, #106
DEERFIELD BEACH, FL 33442
PH: (954) 354-0660 FAX: (954) 354-0443
WWW.ENGEXP.COM
CERT OF AUTH #9885
A. FRANK L. BENNARDO, P.E., INC. INNOVATION

KAWNEER AN ALCOA COMPANY
555 GUTHRIDGE COURT
NORCROSS, GEORGIA 30092
PHONE (770) 449-5555
FAX (770) 734-1560

2000T INSWING TERRACE DOOR
LARGE MISSILE IMPACT
SINGLE DOOR OR PAIR OF DOORS

REMARKS	DRWN	CHKD	DATE
INIT ISSUE	CL	FLB	7/17/06
REVISION	JEM	CL	03/09/07
07 FBC UPDATE	RKB	CL	12/17/08
-	-	-	-
-	-	-	-

06-KAW-0002

SCALE: - 01

PAGE DESCRIPTION:
-
-

13

10

03/16/2009 - 1:48pm rbartlett F:\01 Project Files\Kawneer (KAW)\2006 Jobs\06-KAW-0002 2000T Terrace Door (NOA) Large Missile, Inswing\06-KAW-0002_01b 2000T Terrace Door (NOA) Large Missile, Inswing.dwg

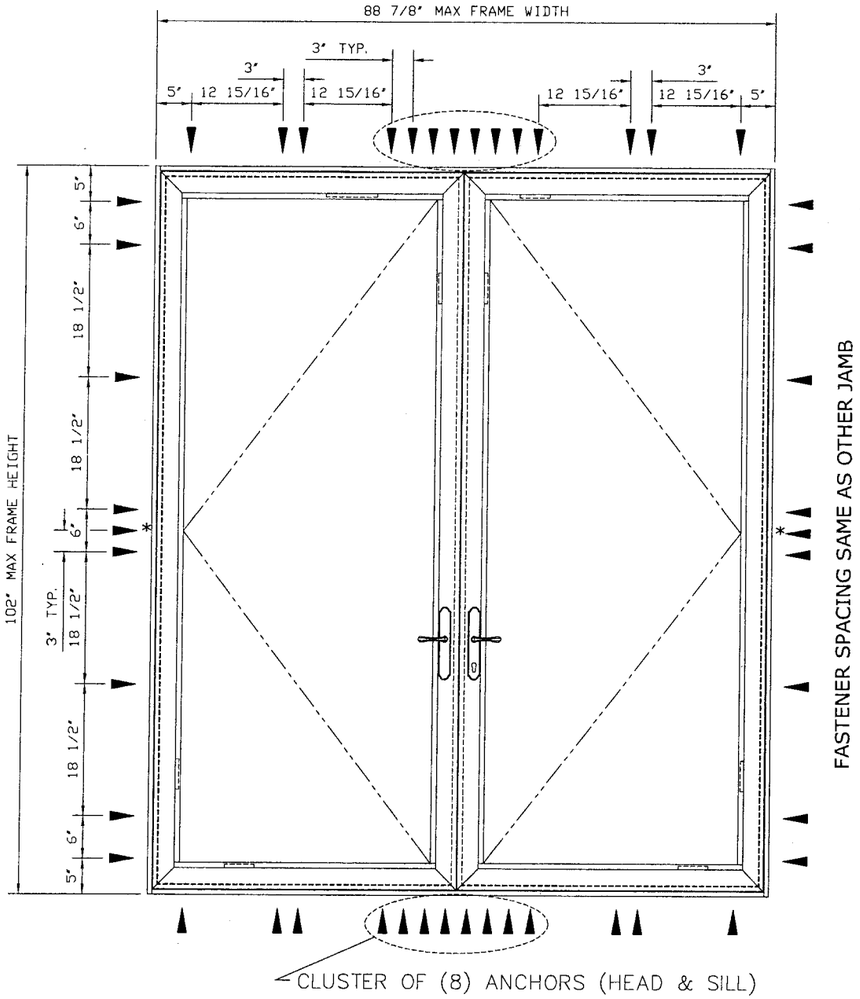

FASTENER SPACING SAME AS HEAD

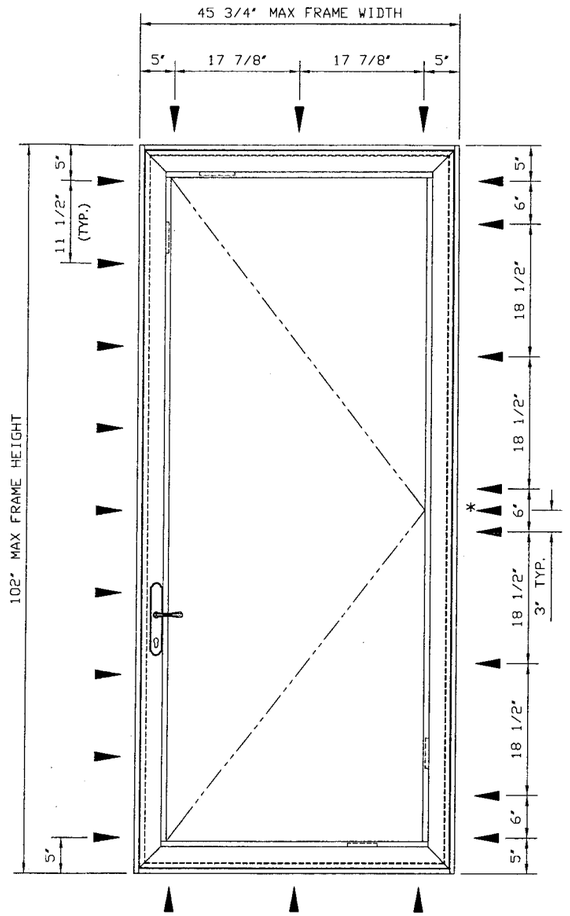

FASTENER SPACING SAME AS HEAD

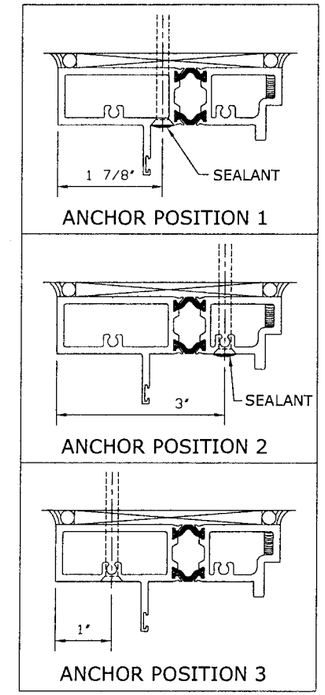

ANCHOR POSITIONS

REF FASTENER SCHEDULE BELOW

PERIMETER FASTENER LOCATIONS

A36 STEEL SUBSTRATE (1/8" MIN THICKNESS)

DESIGN PRESSURE = ±100 PSF (GLAZING TYPE 1, 2, OR 3)

* THESE PERIMETER FASTENERS TO GO THROUGH BUTT HINGE FOR ANCHOR POSITION 2

ANCHOR NOTES:

1. SEE EXTERIOR ELEVATION FOR ANCHOR LOCATIONS AND/OR SPACING.
2. ANCHORS SHALL BE INSTALLED IN ACCORDANCE WITH MANUFACTURERS' RECOMMENDATIONS.
3. ENSURE FULL THREAD ENGAGEMENT TO 1/8" MIN STEEL SUBSTRATE. ENSURE MINIMUM OF 1" EDGE DISTANCE.
4. MINIMUM EMBEDMENT SHALL BE AS NOTED IN ANCHOR SCHEDULE. MINIMUM EMBEDMENT AND EDGE DISTANCE EXCLUDES STUCCO, FOAM, BRICK, AND OTHER WALL FINISHES.

STEEL ANCHOR SCHEDULE

#14 GRADE 5 SHEET METAL SCREW

▼ ANCHOR POSITIONS 1, 2, OR 3

PRODUCT REVISED
as complying with the Florida Building Code
Acceptance No. 09-0121.08
Expiration Date APRIL 26, 2012
By Isaac I. Lauda
Miami Dade Product Control Division

FRANK L. BENNARDO, P.E.
PE0046549
03/16/2009

ENGINEERING EXPRESS®
160 SW 12th AVENUE, #106
DEERFIELD BEACH, FL 33442
PH: (954) 354-0660 FAX: (954) 354-0443
WWW.ENGEXP.COM
CERT OF AUTH #9885
A. FRANK L. BENNARDO, P.E., INC. INNOVATION

KAWNEER AN ALCOA COMPANY
555 GUTHRIDGE COURT
NORCROSS, GEORGIA 30092
PHONE (770) 449-5555
FAX (770) 734-1560

2000T INSWING TERRACE DOOR
LARGE MISSILE IMPACT
SINGLE DOOR OR PAIR OF DOORS

REMARKS	DRWN	CHK'D	DATE
INIT ISSUE	CL	FLB	7/17/06
REVISION	JEM	CL	03/09/07
'07 FBC UPDATE	RKB	CL	12/17/08
-	-	-	-
-	-	-	-

06-KAW-0002
SCALE: - 01
PAGE DESCRIPTION:
-
-

03/16/2009 - 1:48pm rbartlett F:\01 Project Files\kawneer (KAW)\2006 Jobs\06-KAW-0002 2000T Terrace Door (NOA) Large Missile, Inswing\06-KAW-0002_01b 2000T Terrace Door (NOA) Large Missile, Inswing.dwg

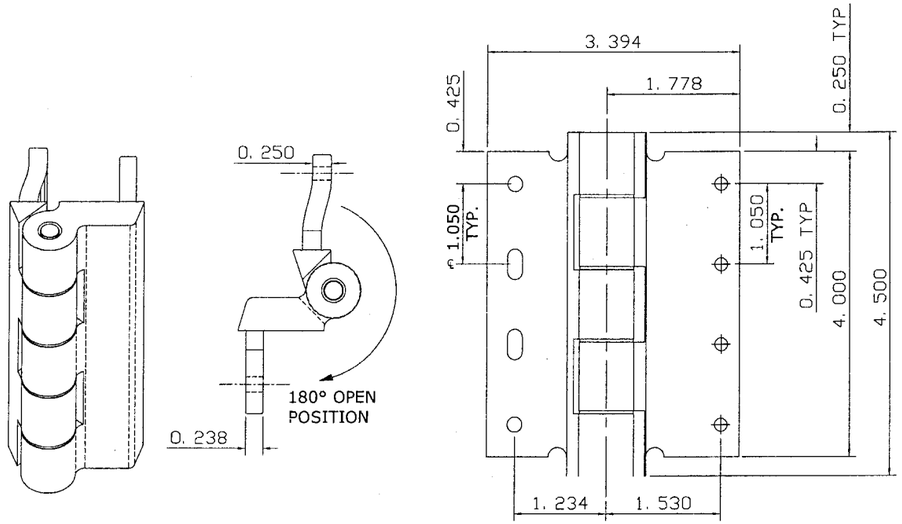

BUTT HINGE DETAILS

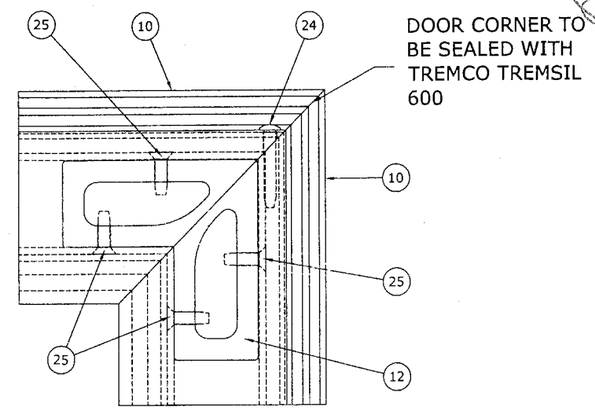

TYPICAL DOOR CORNER

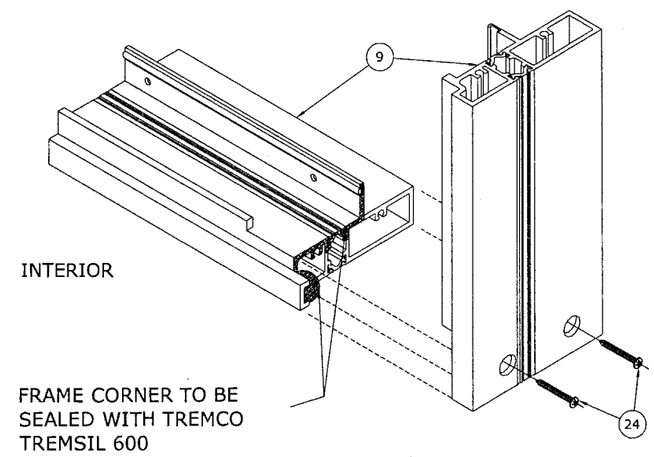

TYPICAL FRAME CORNER

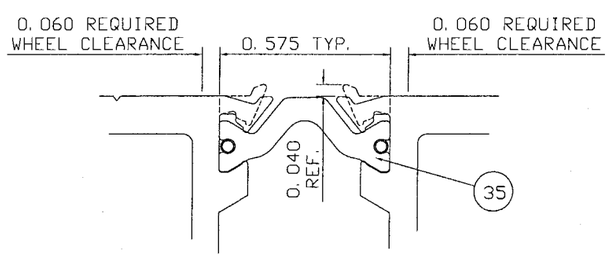

NOTE: ASSEMBLY MUST MEET 900 LBS. MINIMUM SHEAR

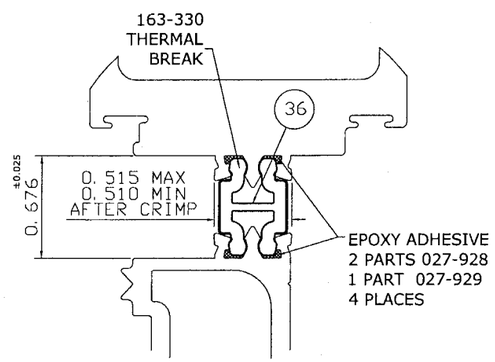

NOTE: ASSEMBLY MUST MEET 2500 LBS. MINIMUM SHEAR

THERMAL BREAK DETAILS

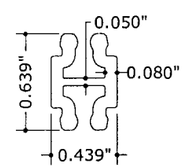

29 ½" THERMAL BREAK

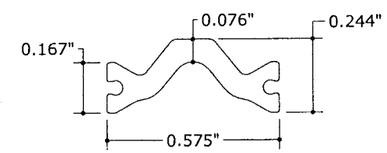

28 14.6 MM OFFSET INSULAR

PRODUCT REVISED
as complying with the Florida Building Code
Acceptance No. 09-0121.08
Expiration Date APRIL 26, 2012
By Ishwaj I. Chand
Miami Dade Product Control Division

FRANK L. BENNARDO, P.E.
PE0046549
03/16/2009

ENGINEERING EXPRESS®
160 SW 12th AVENUE, #106
DEERFIELD BEACH, FL 33442
PH: (954) 354-0660 FAX: (954) 354-0443
WWW.ENGEXP.COM
CERT OF AUTH #9885
A FRANK L. BENNARDO, P.E., INC. INNOVATION

KAWNEER
AN ALCOA COMPANY
555 GUTHRIDGE COURT
NORCROSS, GEORGIA 30092
PHONE (770) 449-5555
FAX (770) 734-1560

2000T INSWING TERRACE DOOR
LARGE MISSILE IMPACT
SINGLE DOOR OR PAIR OF DOORS

REMARKS	DRWN	CHKD	DATE
INIT ISSUE	CL	FLB	7/17/06
REVISION	JEM	CL	03/09/07
'07 FBC UPDATE	RKB	CL	12/17/08

06-KAW-0002
SCALE: - 01
PAGE DESCRIPTION:

13

12

03/16/2009 - 1:48pm rbartlett F:\01 Project Files\Kawneer (KAW)\2006 Jobs\06-KAW-0002 2000T Terrace Door (NOA) Large Missile, Inswing\06-KAW-0002_01b 2000T Terrace Door (NOA) Large Missile, Inswing.dwg

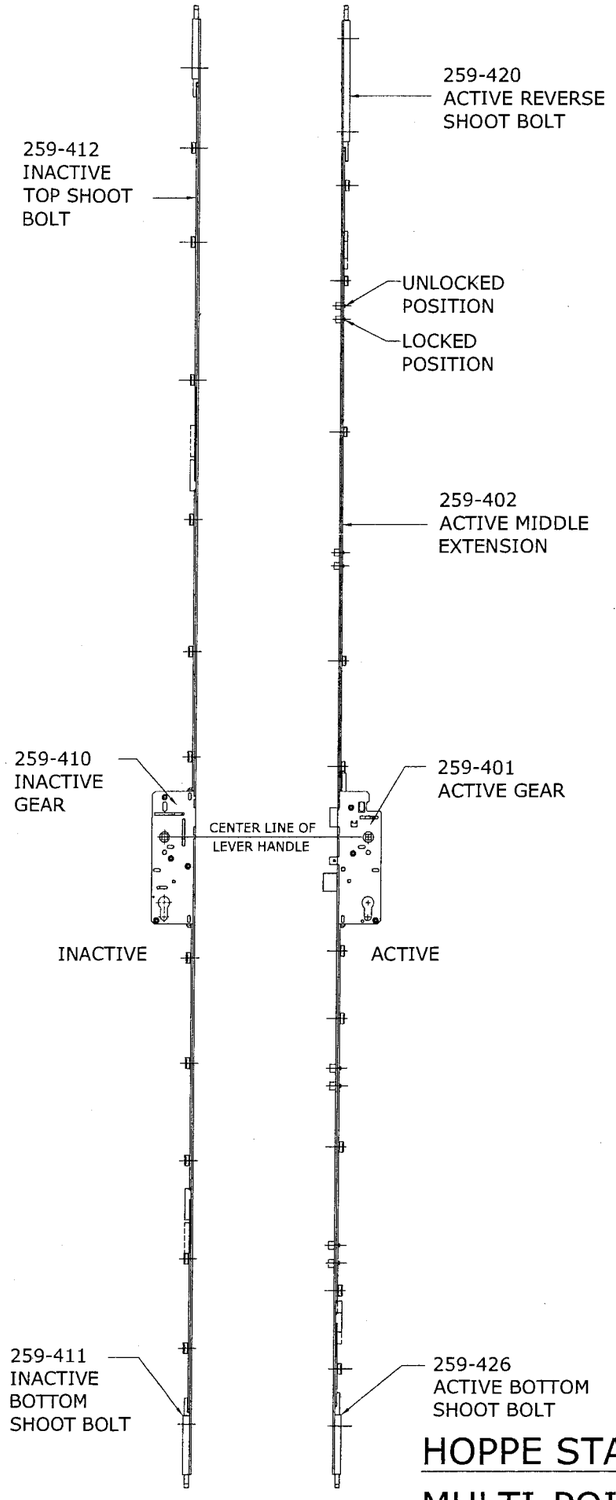

HOPPE STAINLESS STEEL MULTI-POINT LOCK

MATERIAL PARTS LIST

NO.	DESCRIPTION	PART NO.	MATERIAL
1	3/16" FIXED GASKET	027-922	EPDM
2	STRUCTURAL SILICONE	127-007	DOW CORNING 995
3	Q-LON WEATHERSEAL	127-043	POLYURETHANE FOAM
4	3/8" GLAZING ROD	127-050	BUTYL
5	SETTING BLOCK	127-045	EPDM
6	FIXED GASKET	127-038	EPDM
7	GLASS STOP	259-064	6063-T6 ALUMINUM
8	SMALL THRESHOLD	259-081	6063-T6 ALUMINUM
9	FRAME HEAD/SILL/JAMB	259-201	6063-T6 ALUMINUM
10	DOOR STILE/RAIL	259-202	6063-T6 ALUMINUM
11	INACTIVE STILE ADAPTER	259-247	6063-T6 ALUMINUM
12	DOOR CORNER CLIP	259-301	6063-T6 ALUMINUM
13	BUTT HINGE	259-353	6063-T6 ALUMINUM
14	FRAME SEALING PAD	127-055	PVC FOAM
15	ACTIVE LATCH & DEADBOLT KEEPER	259-373	300 STAINLESS STEEL
16	HEAD/SILL SHOOT BOLT KEEPER	259-375	TURNED BRASS
17	ACTIVE FOUR POINT GEAR	259-401	300 STAINLESS STEEL
18	INACTIVE GEAR	259-410	300 STAINLESS STEEL
19	ACTIVE HANDLE/TRIM KIT	259-559	NICKEL-BRASS
20	GLASS STOP COVER	259-065	6063-T6 ALUMINUM
21	INACTIVE HANDLE/TRIM KIT	259-560	NICKEL-BRASS
22	#10 x 3/4" TORX PAN HEAD TFS	128-507	300 STAINLESS STEEL
23	#10 x 1-3/4" TORX PAN HEAD TFS	128-535	300 STAINLESS STEEL
24	#12 x 1-1/2" TORX PAN HEAD TFS	128-536	300 STAINLESS STEEL
25	1/4-14 x 3/4" TORX FLAT HEAD TFS	128-537	300 STAINLESS STEEL
26	#8-18 x1" TORX FLAT HEAD SELF DRILLING SCREW	128-538	300 STAINLESS STEEL
27	ACTIVE MIDDLE EXTENSION	259-402	300 STAINLESS STEEL
28	INACTIVE STILE ADAPTER	259-246	6063-T6 ALUMINUM
29	#10 x 7/16" TORX PAN HEAD TFS	128-414	300 STAINLESS STEEL
30	WEATHERING	127-054	POLYURETHANE FOAM
31	ACTIVE TOP REV SHOOT BOLT	259-420	300 STAINLESS STEEL
32	ACTIVE BOTTOM SHOOT BOLT	259-426	300 STAINLESS STEEL
33	INACTIVE SILL SHOOT BOLT	259-411	300 STAINLESS STEEL
34	INACTIVE TOP SHOOT BOLT	259-412	300 STAINLESS STEEL
35	14.6 MM OFFSET INSULBAR BY ENSINGER	259-351	NYLON
36	1/2" THERMAL BREAK WITH ADHESIVE APOXY	163-330	NYLON

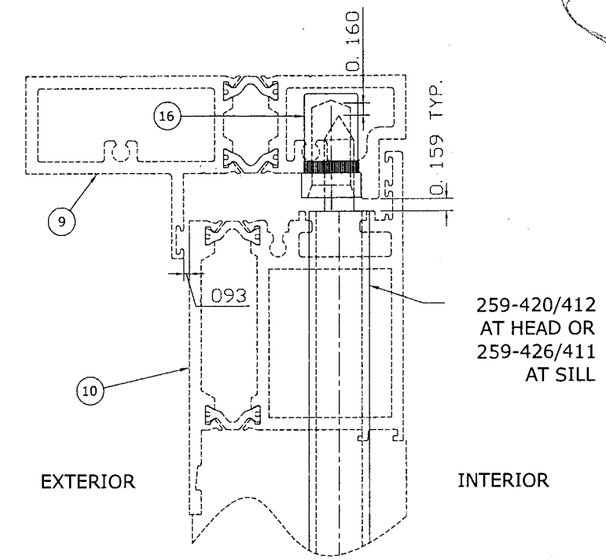

SHOOT BOLT KEEPER DETAIL

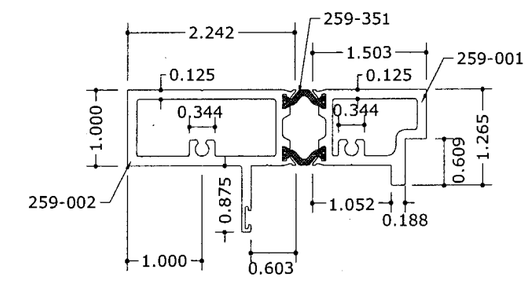

PRODUCT REVISED
as complying with the Florida Building Code
Acceptance No 09-0121.08
Expiration Date APRIL 26, 2012
By Shaq L. Chaunk
Miami Dade Product Control Division

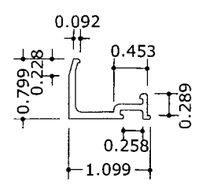

7 GLASS STOP

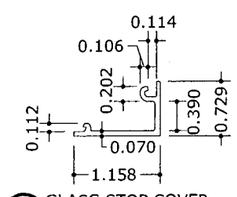

20 GLASS STOP COVER

9 FRAME HEAD/SILL/JAMB

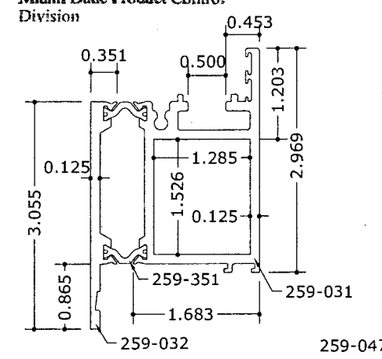

10 DOOR STILE RAIL

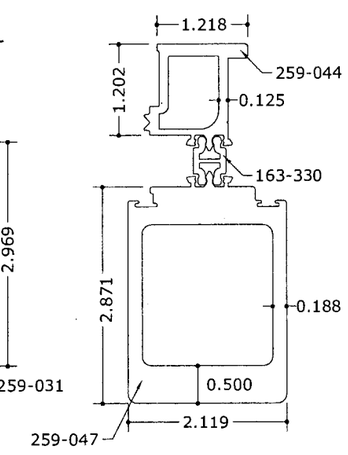

11 DOOR STILE RAIL

FRANK L. BENNARDO, P.E.
PE0046549
03/16/2009
ENGINEERING EXPRESS®
160 SW 12th AVENUE, #106
DEERFIELD BEACH, FL 33442
PH: (954) 354-0660 FAX: (954) 354-0443
WWW.ENGEXP.COM
CERT OF AUTH #9885
A FRANK L. BENNARDO, P.E., INC. INNOVATION
KAWNEER
AN ALCOA COMPANY
555 GUTHRIDGE COURT
NORCROSS, GEORGIA 30092
PHONE (770) 449-5555
FAX (770) 734-1560

2000T INSWING TERRACE DOOR
LARGE MISSILE IMPACT
SINGLE DOOR OR PAIR OF DOORS

REMARKS	DRWN	CHKD	DATE
INIT ISSUE	CL	FLB	7/17/06
REVISION	JEM	CL	03/09/07
'07 FBC UPDATE	RKB	CL	12/17/08
-	-	-	-
-	-	-	-

06-KAW-0002
SCALE: - 01
PAGE DESCRIPTION:
-
-

03/16/2009 - 1:48pm rbartlett F:\01 Project Files\Kawneer (KAW)\2006 Jobs\06-KAW-0002 2000T Terrace Door (NOA) Large Missile, Inswing\06-KAW-0002_01b 2000T Terrace Door (NOA) Large Missile, Inswing.dwg