MIAMI-DADE COUNTY

BUILDING CODE COMPLIANCE OFFICE (BCCO)
PRODUCT CONTROL DIVISION

MIAMI-DADE COUNTY, FLORIDA
METRO-DADE FLAGLER BUILDING
140 WEST FLAGLER STREET, SUITE 1603
MIAMI, FLORIDA 33130-1563
(305) 375-2901 FAX (305) 375-2908
www.miamidade.gov/buildingcode

# NOTICE OF ACCEPTANCE (NOA)

**Kawneer Company, Inc.**
**555 Guthridge Court**
**Norcross, Georgia 30092**

**SCOPE:**

This NOA is being issued under the applicable rules and regulations governing the use of construction materials. The documentation submitted has been reviewed by Miami-Dade County Product Control Division and accepted by the Board of Rules and Appeals (BORA) to be used in Miami Dade County and other areas where allowed by the Authority Having Jurisdiction (AHJ).

This NOA shall not be valid after the expiration date stated below. The Miami-Dade County Product Control Division (In Miami Dade County) and/or the AHJ (in areas other than Miami Dade County) reserve the right to have this product or material tested for quality assurance purposes. If this product or material fails to perform in the accepted manner, the manufacturer will incur the expense of such testing and the AHJ may immediately revoke, modify, or suspend the use of such product or material within their jurisdiction. BORA reserves the right to revoke this acceptance, if it is determined by Miami-Dade County Product Control Division that this product or material fails to meet the requirements of the applicable building code.

This product is approved as described herein, and has been designed to comply with the Florida Building Code, including High Velocity Hurricane Zone of the Florida Building Code.

**DESCRIPTION: Series "2000T" Outswing Aluminum Door-S. M. Impact**

**APPROVAL DOCUMENT:** Drawing No. **03-KAW-1401,** titled "2000T Outswing Terrace Door", sheets 1 through 09 of 09, prepared by Engineering Express, Consulting Engineers, dated 12/18/08 and last revised on 03/16/2009, signed and sealed by Frank L. Bennardo, P.E., bearing the Miami-Dade County Product Control Revision stamp with the Notice of Acceptance number and expiration date by the Miami-Dade County Product Control Division.

**MISSILE IMPACT RATING: Small Missile Impact Resistant**

**LABELING:** Each unit shall bear a permanent label with the manufacturer's name or logo, city, state and following statement: "Miami-Dade County Product Control Approved", unless otherwise noted herein.

**RENEWAL** of this NOA shall be considered after a renewal application has been filed and there has been no change in the applicable building code negatively affecting the performance of this product.

**TERMINATION** of this NOA will occur after the expiration date or if there has been a revision or change in the materials, use, and/or manufacture of the product or process. Misuse of this NOA as an endorsement =- f any product, for sales, advertising or any other purposes shall automatically terminate this NOA. Failure to comply with any section of this NOA shall be cause for termination and removal of NOA.

**ADVERTISEMENT:** The NOA number preceded by the words Miami-Dade County, Florida, and followed by the expiration date may be displayed in advertising literature. If any portion of the NOA is displayed, then it shall be done in its entirety.

**INSPECTION:** A copy of this entire NOA shall be provided to the user by the manufacturer or its distributors and shall be available for inspection at the job site at the request of the Building Official.

This NOA **revises** NOA # **07-0625.04** consists of this page 1 and evidence page E-1, as well as approval document mentioned above.

The submitted documentation was reviewed by **Ishaq I. Chanda, P.E.**



MIAMI-DADE COUNTY APPROVED

4/1/19

## NOTICE OF ACCEPTANCE: EVIDENCE SUBMITTED

**A. DRAWINGS** (transferred from file # **07-0625.04**)

1. Manufacturer's die drawings and sections.
2. Drawing No. **03-KAW-1401,** titled "2000T Outswing Terrace Door", sheets 1 through 09 of 09, prepared by Engineering Express, Consulting Engineers, dated 12/18/08 and last revised on 03/16/2009, signed and sealed by Frank L. Bennardo, P.E.

**B. TESTS** (transferred from file # **07-0625.04**)

1. Test reports on 1) Air Infiltration Test, per FBC, TAS 202-94
   2) Uniform Static Air Pressure Test, Loading per FBC, TAS 202-94
   3) Water Resistance Test, per FBC, TAS 202-94
   4) Forced Entry Test, per FBC 2411 3.2.1 and TAS 202-94
   5) Small Missile impact Test per FBC, TAS 201-94
   6) Cyclic Wind Pressure Loading per FBC, TAS 203-94

Along with marked-up drawings and installation diagram of aluminum outswing door, prepared by Hurricane Testing Laboratory Inc, Test Report No. **HTL-0049-0228-03, 0049-0418-03 and 0049-1002.03**, dated 05/27/03, 05/19/03 & 09/30/03 respectively, signed & sealed by Vinu J. Abraham, P.E. Note: This test report has been revised by addendum letters April 13, 2004, issued by Hurricane Testing Laboratory Inc, signed & sealed by Vinu J. Abraham, P.E.

**C. CALCULATIONS**

1. Anchor verification calculations complying w/ FBC-2007, dated March 15, 2007 and last revised on 03/25/2009, prepared, signed and sealed by Frank L. Bennardo, P.E.
2. Anchor verification calculations complying w/ FBC-2004, dated June 08, 2005, prepared, signed and sealed by Frank L. Bennardo, P.E. (transferred from file # **07-0625.04).**
3. Glazing complies w / ASTME-1300-02 &-04

**D. QUALITY ASSURANCE BY:**

1. Miami-Dade Building Code Compliance Office (BCCO).

**E. MATERIAL CERTIFICATIONS**

1. Test report # 06520.02-106-18 issued by Architectural testing dated 12/1/06 for Ensinger Inc's "Insulbar" per ASTM G155 (xenon Arch) accelerated weathering, Tensile test per ASTMD-638, rate of burning per ASTM635, smoke density per ASTM D-2843 and self ignition per ASTM D1929, signed and sealed by Joseph Reed, P.E. (transferred from file # **07-0625.04)**
2. Notice of Acceptance No. **05-1208.02** issued to E.I. DuPont DeNemours, for "DuPont Butacite ® PVB", expiring on 12/11/2010
3. Notice of Acceptance No. **06-0216.06** issued to Solutia, for "Saflex IIIG clear & color interlayer", expiring on 05/21/2011

**F. STATEMENTS** (transferred from file # **07-0625.04**)

1. Statement letter complying w/ FBC-2007, dated 01-12-2009, prepared, signed and sealed by Frank L. Bennardo, P. E.
2. Statement letters of conformance to FBC 2004 and "No financial interest", both dated July 01, 2005, signed and sealed by Frank L. Bennardo, P.E.
3. Statement of compliance, issued as part of the above referenced test report issued by Hurricane Testing Laboratory.

**G. OTHER**

1. This NOA **revises** NOA # **07-0625.04,** expired on November 25, 2010.
2. "Insulbar" by Ensinger compliance to plastic component requirements per FBC.
3. Test proposal approved by BCCO dated 01/16/2003.

Ishaq I. Chanda

**Ishaq I. Chanda, P.E.**
**Product Control Examiner**
**NOA No 09-0121.09**
**Expiration Date: November 25, 2010**
**Approval Date: April 22, 2009**

# 2000T OUTSWING TERRACE DOOR

SMALL MISSILE IMPACT

## GENERAL NOTES

1. THE SYSTEM DESCRIBED HEREIN HAS BEEN DESIGNED AND TESTED IN ACCORDANCE WITH THE 2007 FLORIDA BUILDING CODE, FOR USE WITHIN THE HIGH VELOCITY HURRICANE ZONE, PER TAS 201 / 202 / 203 & ASTM E1300-98 STANDARDS.
2. NO 33-1/3% INCREASE IN ALLOWABLE STRESS HAS BEEN USED IN THE DESIGN OF THIS SYSTEM. WIND LOAD DURATION FACTOR Cd=1.6 HAS BEEN USED FOR WOOD ANCHOR DESIGN.
3. POSITIVE AND NEGATIVE DESIGN PRESSURES CALCULATED FOR USE WITH THIS SYSTEM SHALL BE DETERMINED BY OTHERS ON A JOB-SPECIFIC BASIS IN ACCORDANCE WITH THE GOVERNING CODE.
4. THE SYSTEM DETAILED HEREIN IS GENERIC AND DOES NOT PROVIDE INFORMATION FOR A SPECIFIC SITE. FOR SITE CONDITIONS DIFFERENT FROM THE CONDITIONS DETAILED HEREIN, A LICENSED ENGINEER OR REGISTERED ARCHITECT SHALL PREPARE SITE SPECIFIC DOCUMENTS FOR USE IN CONJUNCTION WITH THIS DOCUMENT OUTSIDE THE HVHZ. WITHIN THE HVHZ, DEVIATION FROM THIS NOA REQUIRES A ONE TIME NOA FROM THE MIAMI-DADE BULDIN CODE COMPLIANCE OFFICE.
5. PERMIT HOLDER SHALL VERIFY THE ADEQUACY OF THE EXISTING STRUCTURE TO WITHSTAND SUPERIMPOSED LOADS. WOOD BUCKS (BY OTHERS) SHALL BE ANCHORED PROPERLY TO TRANSFER LOADS TO THE EXISTING STRUCTURE.
6. ALL EXTRUSIONS SHALL BE 6063-T6 ALUMINUM ALLOY, UNLESS NOTED OTHERWISE.
7. UNITS GLAZED WITH 9/16" LAMINATED GLASS ARE SMALL MISSILE IMPACT RESISTANT AND SHALL BE PROTECTED WITH MIAMI-DADE COUNTY IMPACT RESISTANT SHUTTERS FOR INSTALLATIONS UP TO 30 FEET ABOVE GRADE. NO PROTECTION REQUIRED FOR INSTALLATIONS ABOVE 30 FEET ABOVE GRADE.
8. ALLOWABLE CONFIGURATIONS: SINGLE OUTSWING DOOR OR DOUBLE OUTSWING DOOR.
9. EXTERIOR SEAM OF FRAME CORNERS SHALL BE SEALED WITH SILICONE.
10. ALL BOLTS & WASHERS SHALL BE ZINC COATED STEEL, GALVANIZED STEEL, OR STAINLESS STEEL WITH A MINIMUM TENSILE YIELD STRENGTH OF 60 KSI.
11. ALL STEEL IN CONTACT WITH ALUMINUM SHALL BE PAINTED OR PLATED AS PRESCRIBED IN THE ABOVE-NOTED BUILDING CODE.

MIAMI-DADE COUNTY PRODUCT APPROVAL
KAWNEER 2000T TERRACE DOOR
OUTSWING DOOR, SINGLE OR PAIR
SMALL MISSILE IMPACT RESISTANT
9/16" H.S. LAMINATED GLASS
W/0.060" PVB (SOLUTIA/DUPONT)

DESIGN PRESSURE = +100 / -100 PSF
(FOR INSTALLATION TO ALL SUBSTRATES EXCEPT ALUMINUM)

DESIGN PRESSURE = +100 / -90 PSF
(FOR INSTALLATION TO ALUMINUM SUBSTRATES)

## GLAZING SCHEDULE

| TYPE | NOMINAL THICKNESS | TYPICAL THICKNESS | DESCRIPTION (SEE SHEET 3 OF 8 FOR GLAZING DETAIL) |
|---|---|---|---|
| 1 | 9/16" | .560" | 1/4" HS OUTBOARD / 0.060" SOLUTIA SAFLEX PVB / 1/4" HS INBOARD (VIRACON LOGO #1729E) |
| 2 | 9/16" | .560" | 1/4" HS OUTBOARD / 0.060" DUPONT BUTACITE PVB / 1/4" HS INBOARD (VIRACON LOGO #1771D) |

GLASS SIZE = DLO + 1.25"

PRODUCT REVISED
as complying with the Florida Building Code
Acceptance No 09-0121.09
Expiration Date NOV. 25, 2010
By Ishwar V. Chand
Miami Dade Product Control Division


FRANK L. BENNARDO, P.E.
# PE0046549
03/16/2009

ENGINEERING EXPRESS®
160 SW 12th AVENUE, #106
DEERFIELD BEACH, FL 33442
PH: (954) 354-0660 FAX: (954) 354-0443
WWW.ENGEXP.COM
CERT OF AUTH #9885
A. FRANK L. BENNARDO, P.E., INC. INNOVATION

555 GUTHRIDGE COURT
NORCROSS, GEORGIA 30092
PHONE (770) 449-5555
FAX (770) 734-1560


KAWNEER
AN ALCOA COMPANY

2000T OUTSWING TERRACE DOOR
SMALL MISSILE IMPACT
SINGLE DOOR OR PAIR OF DOORS

| REMARKS | DRWN | CHKD | DATE |
|---|---|---|---|
| '07 FBC REVISION | RKB | CL | 12/18/06 |
| BCCO COMMENTS | RKB | CL | 03/16/09 |

03-KAW-1401
SCALE: -
02
PAGE DESCRIPTION:
-
-

1


03/16/2009 - 2:00pm rbartlett F:\01 Project Files\Kawneer (KAW)\2003 Jobs\03-1401-136 2000T Terrace Door, SMI (NOA)\03-KAW-1401_02b Kawneer 2000T Terrace Door.dwg

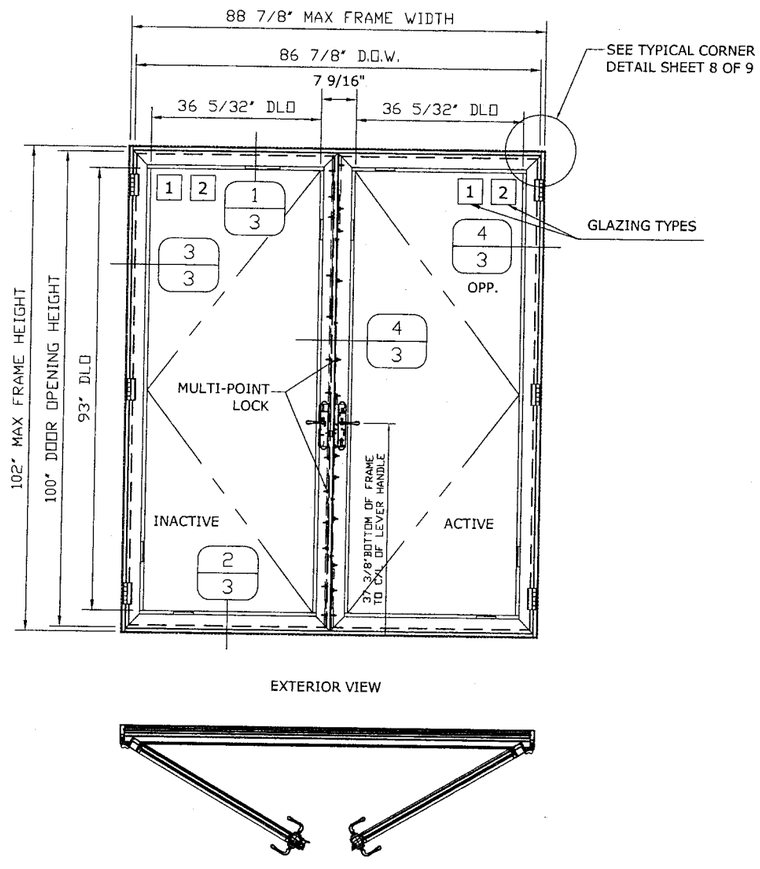


1/2 DOUBLE OUTSWING DOOR
N.T.S. ELEVATION

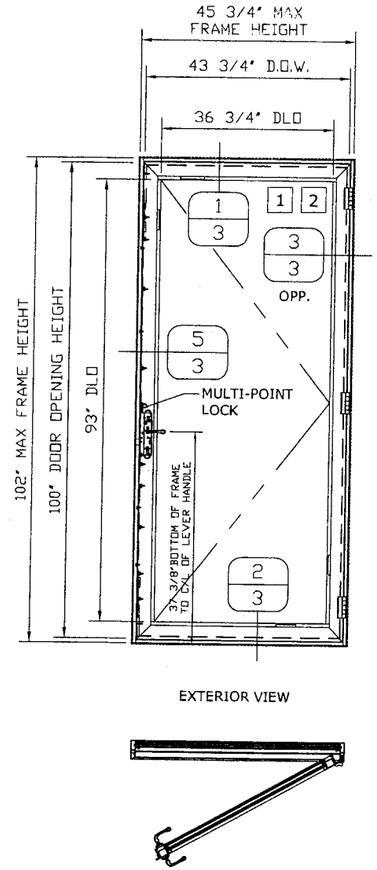


1/2 SINGLE OUTSWING DOOR
N.T.S. ELEVATION

PRODUCT REVISED
as complying with the Florida Building Code
Acceptance No 09-0121-09
Expiration Date NOV. 25, 2010
By Ishaq I. Chanda
Miami Dade Product Control Division

FRANK L. BENNARDO, P.E.
# PE0046549
03/16/2009

ENGINEERING EXPRESS®
160 SW 12th AVENUE, #106
DEERFIELD BEACH, FL 33442
Ph: (954) 354-0660 FAX: (954) 354-0443
WWW.ENGEXP.COM
CERT OF AUTH #9885
A FRANK L. BENNARDO, P.E., INC. INNOVATION

555 GUTHRIDGE COURT
NORCROSS, GEORGIA 30092
PHONE (770) 449-5555
FAX (770) 734-1560

KAWNEER AN ALCOA COMPANY

2000T OUTSWING TERRACE DOOR
SMALL MISSILE IMPACT
SINGLE DOOR OR PAIR OF DOORS

| REMARKS | DRWN | CHKD | DATE |
|---|---|---|---|
| 07 FBC REVISION | RKB | CL | 12/18/08 |
| BCCO COMMENTS | RKB | CL | 03/16/09 |

03-KAW-1401
SCALE: - 02
PAGE DESCRIPTION:

9

2

03/16/2009 - 2:00pm rbartlett F:\01 Project Files\Kawneer (KAW)\2003 Jobs\03-1401-136 2000T Terrace Door, SMI (NOA)\03-KAW-1401_02b Kawneer 2000T Terrace Door.dwg

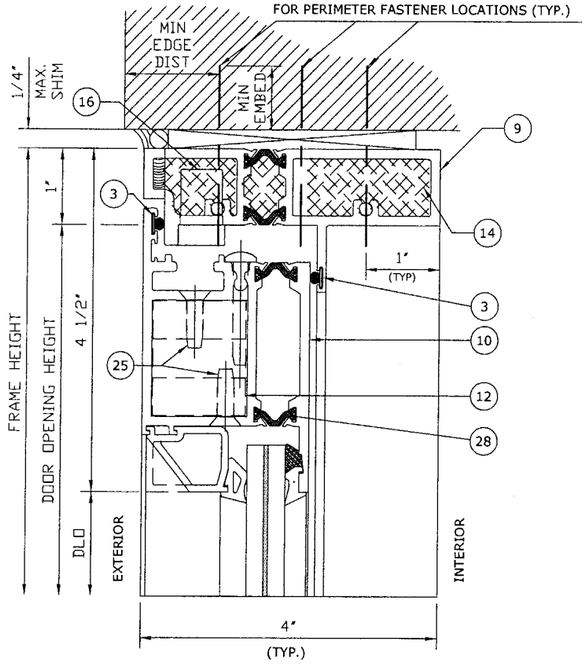


1/3

HEAD

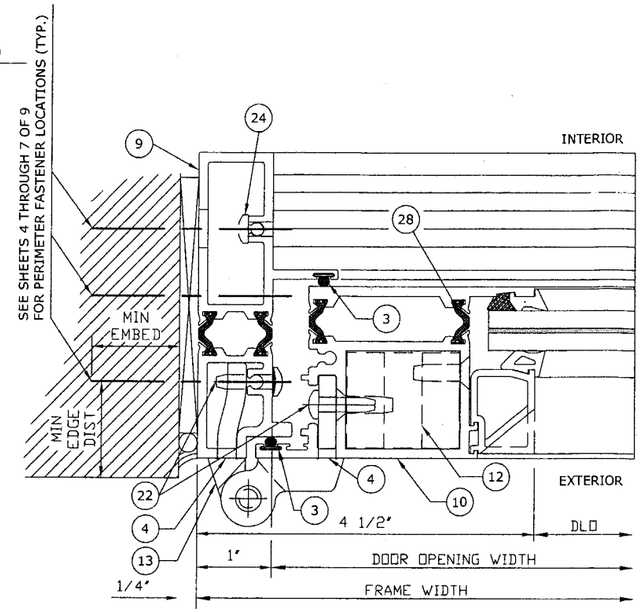


3/3

HINGE JAMB

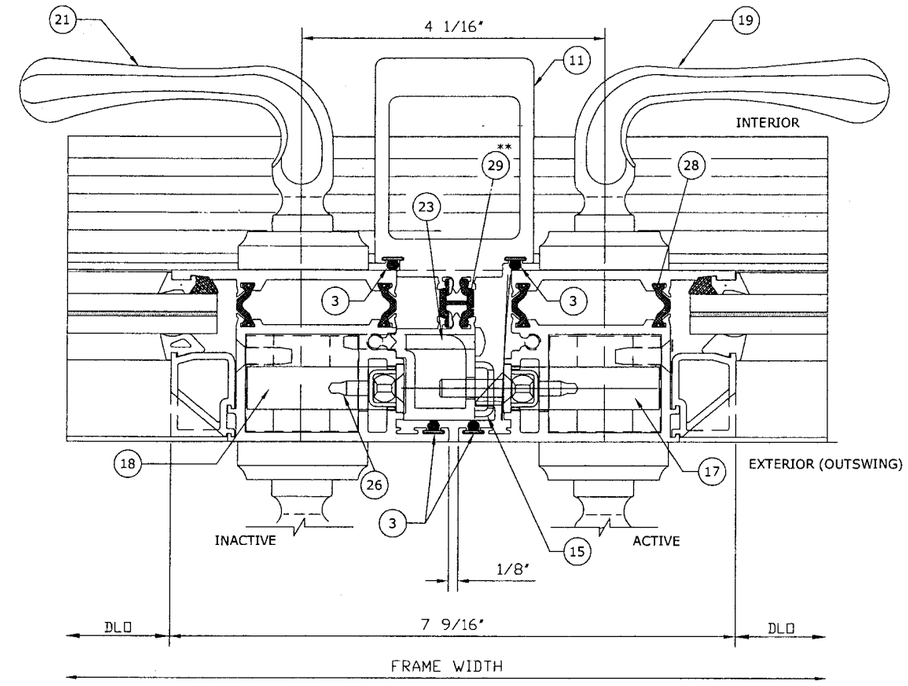


** SEE THERMAL BREAK DETAIL SHEET 8 OF 8

4/3

MEETING STILES

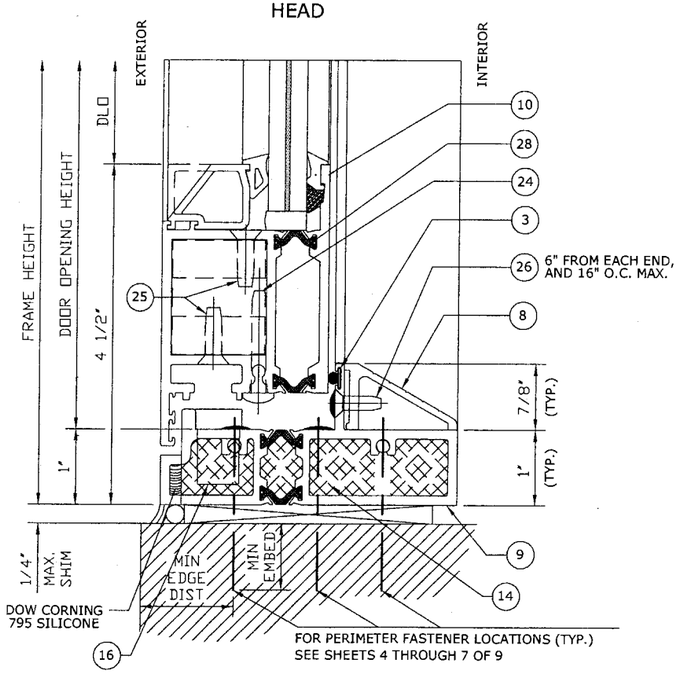


2/3

SILL

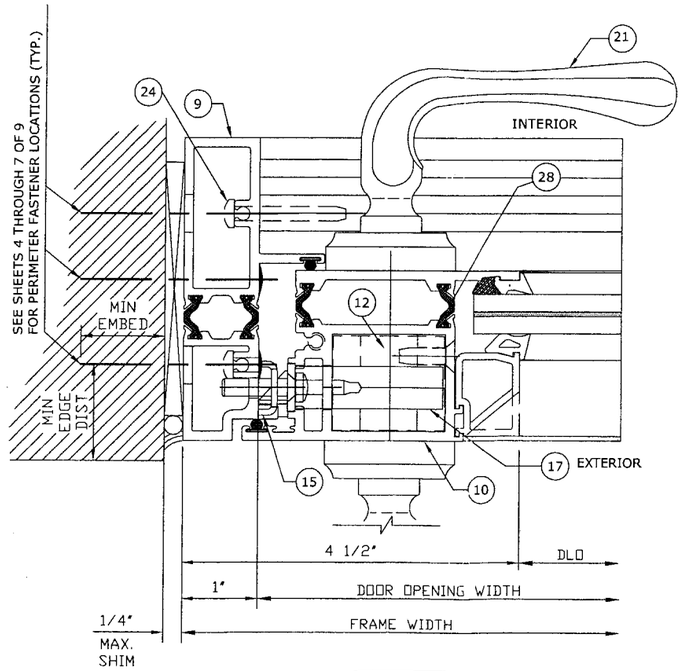


5/3

LOCK JAMB SINGLES

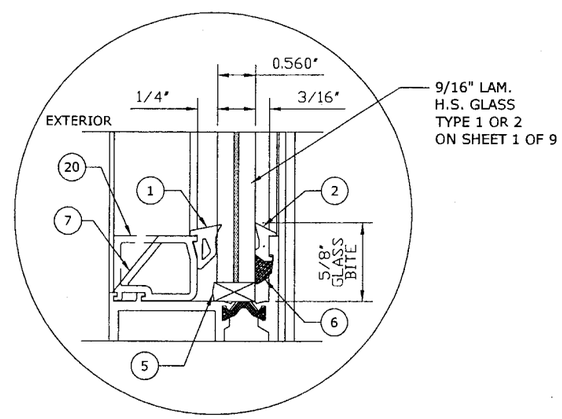


# GLAZING DETAIL

9/16" LAMINATED H.S. GLASS

PRODUCT REVISED
as complying with the Florida Building Code
Acceptance No 09-0121.09
Expiration Date NOV. 25, 2010
By Ishaq I. Khan
Miami Dade Product Control Division

FRANK L. BENNARDO, P.E.
# PE0046549
03/16/2009

ENGINEERING EXPRESS®
160 SW 12th AVENUE, #106
DEERFIELD BEACH, FL 33442
PH: (954) 354-0660 FAX: (954) 354-0443
WWW.ENGEXP.COM
CERT OF AUTH #9885
A FRANK L. BENNARDO, P.E., INC. INNOVATION

KAWNEER AN ALCOA COMPANY
555 GUTHRIDGE COURT
NORCROSS, GEORGIA 30092
PHONE (770) 449-5555
FAX (770) 734-1560

2000T OUTSWING TERRACE DOOR
SMALL MISSILE IMPACT
SINGLE DOOR OR PAIR OF DOORS

| REMARKS | DRWN | CHKD | DATE |
|---|---|---|---|
| '07 FBC REVISION | RKB | CL | 12/18/08 |
| BCCO COMMENTS | RKB | CL | 03/16/09 |

03-KAW-1401
SCALE: -
02
PAGE DESCRIPTION:
9
3

03/16/2009 - 2:00pm rbartlett F:\01 Project Files\Kawneer (KAW)\2003 Jobs\03-1401-136 2000T Terrace Door, SMI (NOA)\03-KAW-1401_02b Kawneer 2000T Terrace Door.dwg

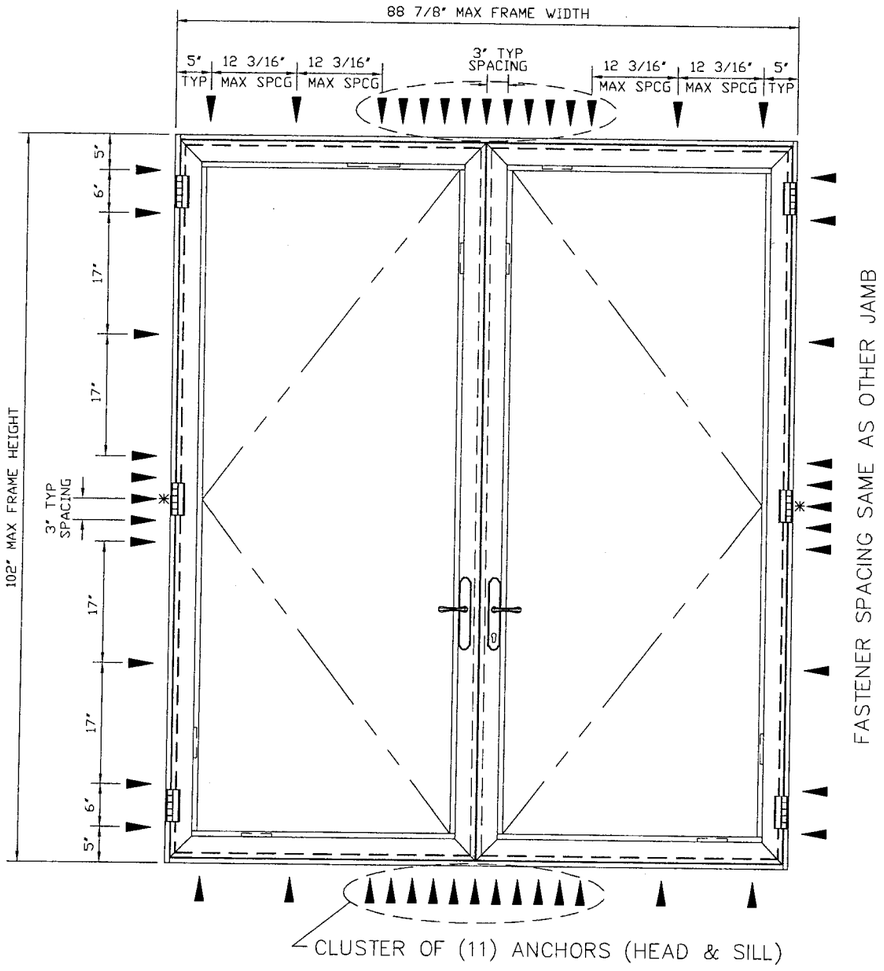


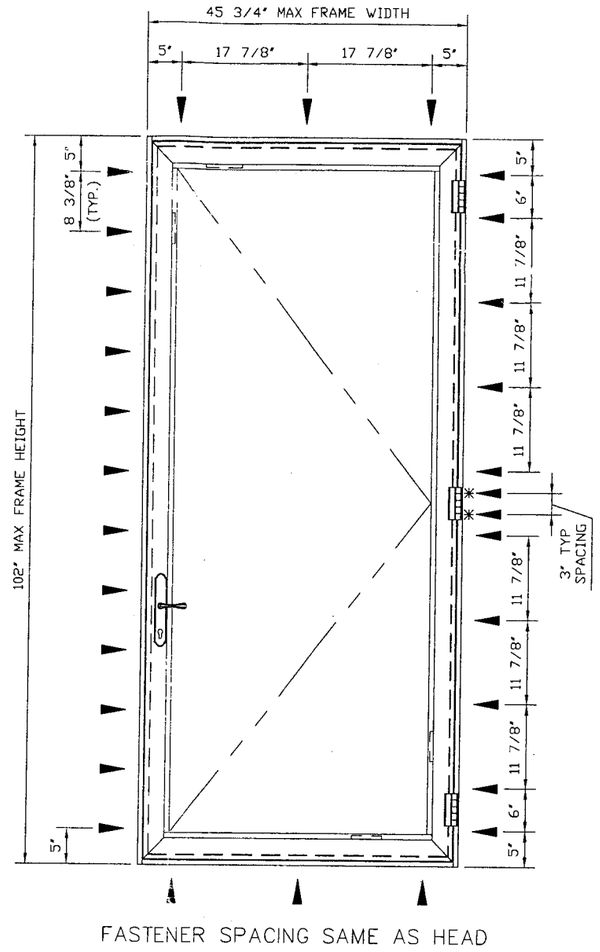


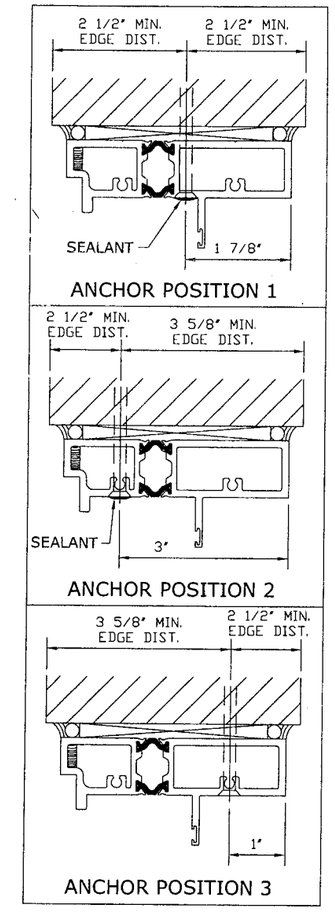


# ANCHOR POSITIONS

REF FASTENER SCHEDULE BELOW

* THESE PERIMETER FASTENERS TO GO THROUGH BUTT HINGE FOR ANCHOR POSITION 2

# PERIMETER FASTENER LOCATIONS

CONCRETE (3320psi MIN) OR HOLLOW BLOCK SUBSTRATES (C-90)

DESIGN PRESSURES: +/-100 PSF (GLAZING TYPES G1 OR G2)

## CONCRETE/BLOCK ANCHOR SCHEDULE

1/4" ITW TAPCON

▼ ANCHOR POSITIONS 1, 2, OR 3

## ANCHOR NOTES:

1. SEE EXTERIOR ELEVATION FOR ANCHOR LOCATIONS AND/OR SPACING.
2. ANCHORS SHALL BE INSTALLED IN ACCORDANCE WITH MANUFACTURERS' RECOMMENDATIONS.
3. TAPCONS SHALL BE MANUFACTURED BY ITW.
4. ENSURE MINIMUM 2-1/2" EDGE DISTANCE FOR ALL ANCHORS TO CONCRETE & TO HOLLOW BLOCK. ENSURE 1-1/4" MIN EMBEDMENT TO HOLLOW BLOCK OR 1-3/4" MIN EMBEDMENT TO CONCRETE.
5. MINIMUM EMBEDMENT AND EDGE DISTANCE EXCLUDES STUCCO, FOAM, BRICK, AND OTHER WALL FINISHES.

PRODUCT REVISED
as complying with the Florida Building Code
Acceptance No 09-0121.09
Expiration Date NOV. 25, 2010
By Miami Dade Product Control Division


FRANK L. BENNARDO, P.E.
# PE0046549
03/16/2009

ENGINEERING EXPRESS®
160 SW 12th AVENUE, #106
DEERFIELD BEACH, FL 33442
PH: (954) 354-0660 FAX: (954) 354-0443
WWW.ENGEXP.COM
CERT OF AUTH #9885
A. FRANK L. BENNARDO, P.E., INC. INNOVATION

KAWNEER
AN ALCOA COMPANY
555 GUTHRIDGE COURT
NORCROSS, GEORGIA 30092
PHONE (770) 449-5555
FAX (770) 734-1560


2000T OUTSWING TERRACE DOOR
SMALL MISSILE IMPACT
SINGLE DOOR OR PAIR OF DOORS

| REMARKS | DRWN | CHKD | DATE |
|---|---|---|---|
| '07 FBC REVISION | RKB | CL | 12/18/08 |
| BCCO COMMENTS | RKB | CL | 03/16/09 |

03-KAW-1401

SCALE: - 02

PAGE DESCRIPTION:

4


03/16/2009 - 2:00pm rbartlett F:\01 Project Files\Kawneer (KAW)\2003 Jobs\03-1401-136 2000T Terrace Door, SMI (NOA)\03-KAW-1401_02b Kawneer 2000T Terrace Door.dwg

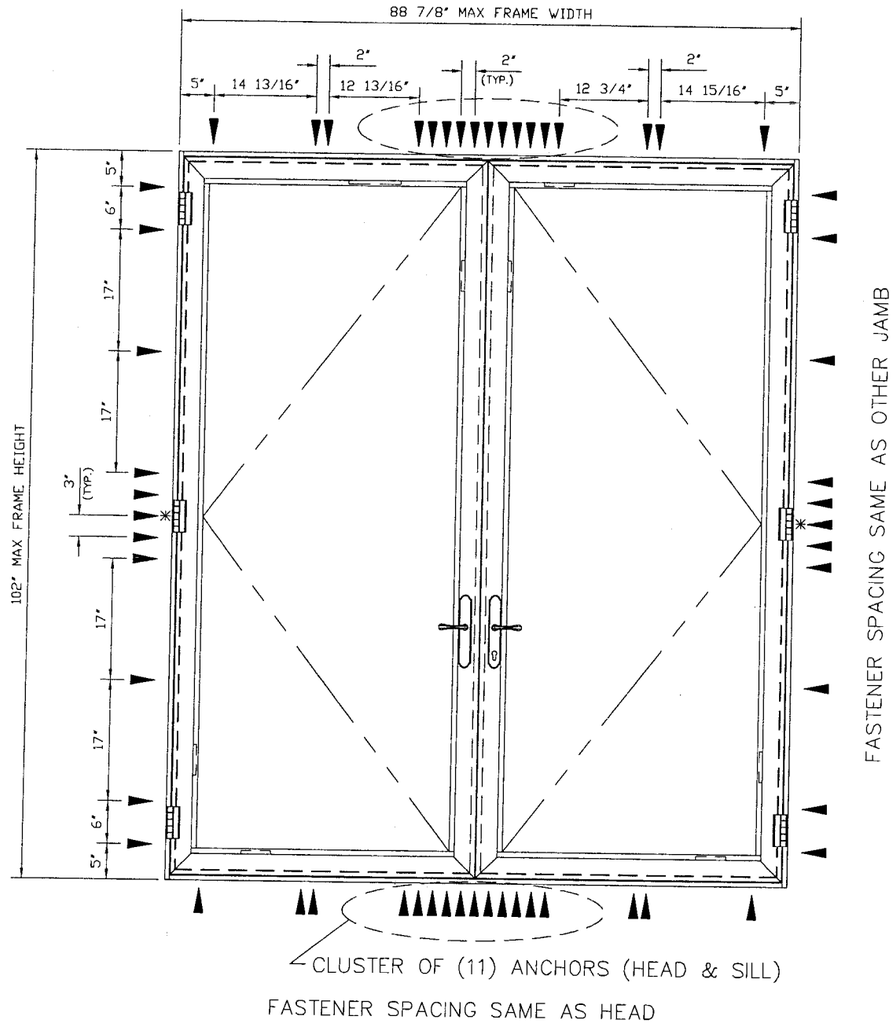


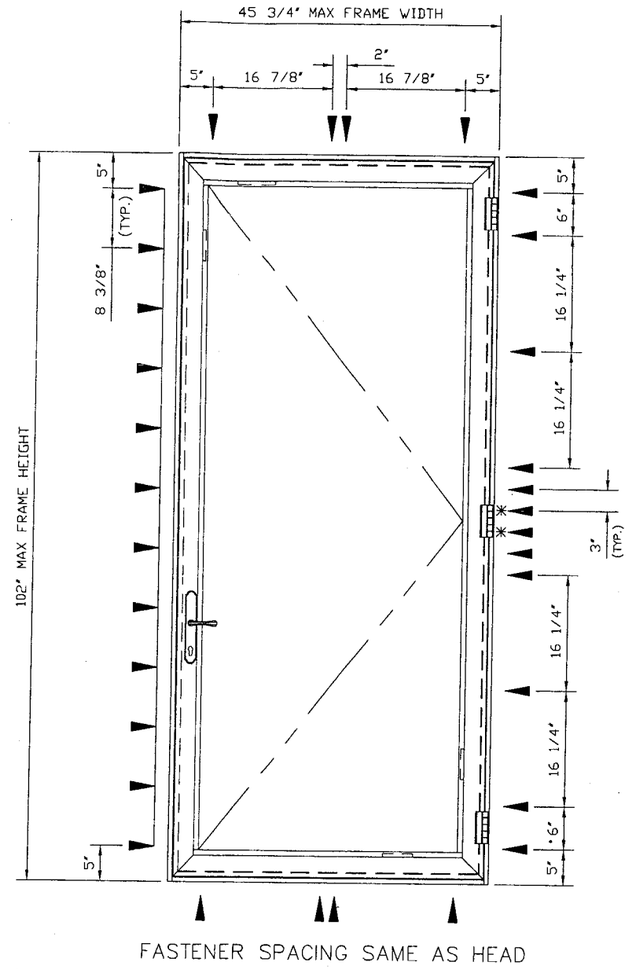


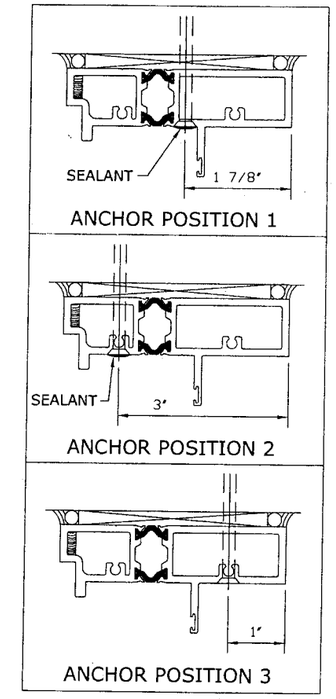


## ANCHOR POSITIONS

REF FASTENER SCHEDULE BELOW

## ANCHOR NOTES:

1. SEE EXTERIOR ELEVATION FOR ANCHOR LOCATIONS AND/OR SPACING.
2. ANCHORS SHALL BE INSTALLED IN ACCORDANCE WITH MANUFACTURERS' RECOMMENDATIONS.
3. TAPCONS SHALL BE MANUFACTURED BY ITW.
4. ENSURE MINIMUM OF 1" EDGE DISTANCE AND 1-1/2" EMBEDMENT FOR ALL WOOD ANCHORS.
5. MINIMUM EMBEDMENT AND EDGE DISTANCE EXCLUDES STUCCO, FOAM, BRICK, AND OTHER WALL FINISHES.
5. WOOD HOST STRUCTURE SHALL BE "SOUTHERN PINE" G=0.55 OR GREATER DENSITY.
6. WHERE EXISTING STRUCTURE IS WOOD FRAMING, EXISTING CONDITIONS MAY VARY. FIELD VERIFY THAT FASTENERS ARE INTO ADEQUATE WOOD FRAMING MEMBERS, NOT INTO PLYWOOD.

## PERIMETER FASTENER LOCATIONS

WOOD SUBSTRATE (SOUTHERN PINE, G=0.55)

DESIGN PRESSURES: +/-100 PSF (GLAZING TYPES G1 OR G2)

### WOOD ANCHOR SCHEDULE

#14 GRADE 5 WOOD SCREW, #14 GRADE 5 LAG SCREW, OR 1/4" ITW TAPCON

▼ ANCHOR POSITIONS 1, 2, OR 3

* THESE PERIMETER FASTENERS TO GO THROUGH BUTT HINGE FOR ANCHOR POSITION 2

PRODUCT REVISED
as complying with the Florida Building Code
Acceptance No 09-0121.09
Expiration Date NOV. 25, 2010
By Ishaq I. Chanda
Miami Dade Product Control Division


FRANK L. BENNARDO, P.E.
# PE0046549
03/16/2009

ENGINEERING EXPRESS®
160 SW 12th AVENUE, #106
DEERFIELD BEACH, FL 33442
PH: (954) 354-0660 FAX: (954) 354-0443
WWW.ENGEXP.COM
CERT OF AUTH #9885
A FRANK L. BENNARDO, P.E., INC. INNOVATION

KAWNEER
AN ALCOA COMPANY
555 GUTHRIDGE COURT
NORCROSS, GEORGIA 30092
PHONE (770) 449-5555
FAX (770) 734-1560


2000T OUTSWING TERRACE DOOR
SMALL MISSILE IMPACT
SINGLE DOOR OR PAIR OF DOORS

| REMARKS | DRWN | CHKD | DATE |
|---|---|---|---|
| 07 FBC REVISION | RKB | CL | 12/18/08 |
| BCCO COMMENTS | RKB | CL | 03/16/09 |

03-KAW-1401
SCALE: - 02
PAGE DESCRIPTION:
-
-

5


03/16/2009 - 2:00pm rbartlett F:\01 Project Files\Kawneer (KAW)\2003 Jobs\03-1401-136 2000T Terrace Door, SMI (NOA)\03-KAW-1401_02b Kawneer 2000T Terrace Door.dwg

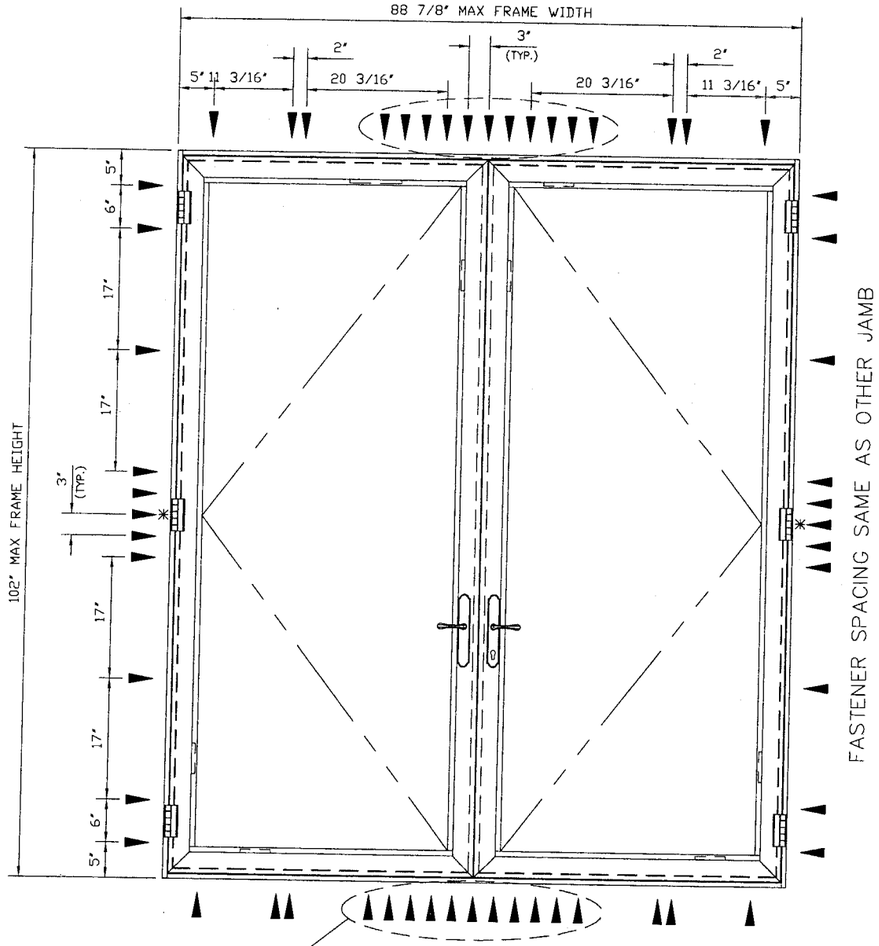


FASTENER SPACING SAME AS HEAD

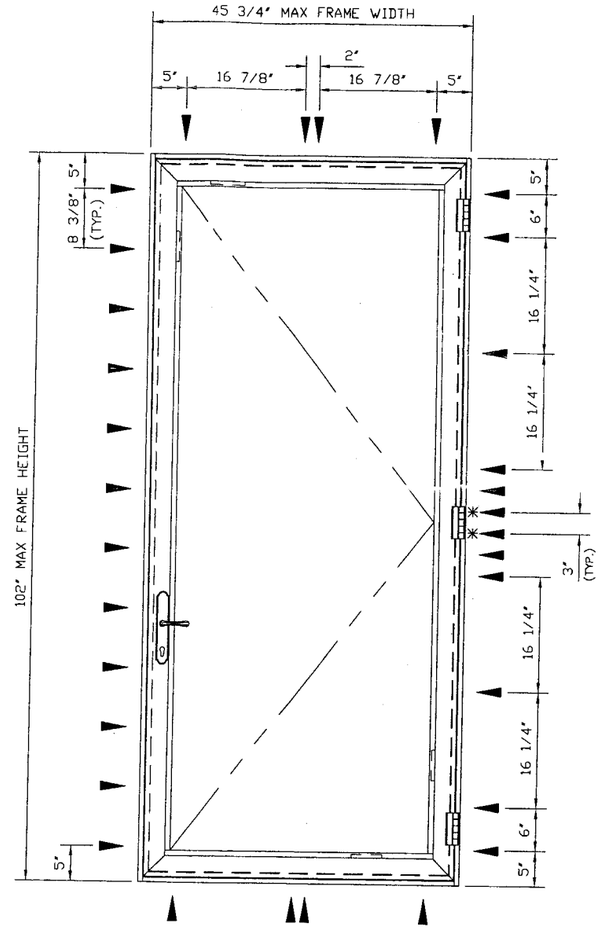


FASTENER SPACING SAME AS HEAD

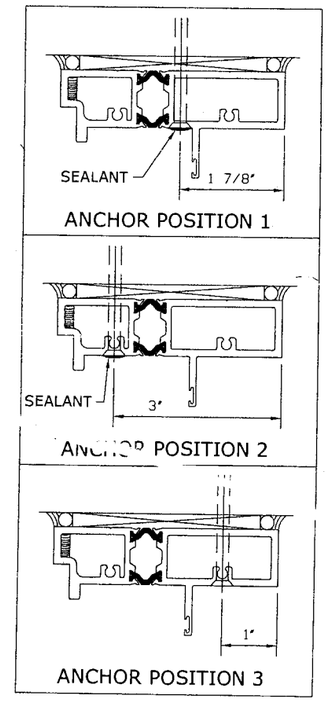


## ANCHOR POSITIONS

REF FASTENER SCHEDULE BELOW

## PERIMETER FASTENER LOCATIONS

ALUMINUM SUBSTRATE 6063-T6 (1/8" MIN THICKNESS)

DESIGN PRESSURES: +100 PSF / -90 PSF (GLAZING TYPES G1 OR G2)

* THESE PERIMETER FASTENERS TO GO THROUGH BUTT HINGE FOR ANCHOR POSITION 2

## ANCHOR NOTES:

1. SEE EXTERIOR ELEVATION FOR ANCHOR LOCATIONS AND/OR SPACING.
2. ANCHORS SHALL BE INSTALLED IN ACCORDANCE WITH MANUFACTURERS' RECOMMENDATIONS.
3. ENSURE FULL THREAD ENGAGEMENT TO 1/8" MIN 6063-T6 ALUMINUM SUBSTRATE. ENSURE MINIMUM OF 1/2" EDGE DISTANCE.
4. MINIMUM EMBEDMENT SHALL BE AS NOTED IN ANCHOR SCHEDULE. MINIMUM EMBEDMENT AND EDGE DISTANCE EXCLUDES STUCCO, FOAM, BRICK, AND OTHER WALL FINISHES.

### ALUMINUM ANCHOR SCHEDULE

#14 GRADE 5 SHEET METAL SCREW

▼ ANCHOR POSITIONS 1, 2, OR 3

PRODUCT REVISED
as complying with the Florida Building Code
Acceptance No. 09-0121.09
Expiration Date NOV. 25, 2010
By Ishaq I. Chanda
Miami Dade Product Control Division


FRANK L. BENNARDO, P.E.
# PE0046549
03/16/2009

ENGINEERING EXPRESS®
160 SW 12th AVENUE, #106
DEERFIELD BEACH, FL 33442
Ph: (954) 354-0660 Fax: (954) 354-0443
WWW.ENGEXP.COM
CERT OF AUTH #9985
A. FRANK L. BENNARDO, P.E., INC. INNOVATION

KAWNEER AN ALCOA COMPANY
555 GUTHRIDGE COURT
NORCROSS, GEORGIA 30092
PHONE (770) 449-5555
FAX (770) 734-1560


2000T OUTSWING TERRACE DOOR
SMALL MISSILE IMPAC
SINGLE DOOR OR PAIR OF DOORS

| REMARKS | DRWN | CHKD | DATE |
|---|---|---|---|
| '07 FBC REVISION | RKB | CL | 12/18/08 |
| BCCO COMMENTS | RKB | CL | 03/16/09 |

03-KAW-1401
SCALE: -
02
PAGE DESCRIPTION:



03/16/2009 - 2:00pm rbartlett F:\01 Project Files\Kawneer (KAW)\2003 Jobs\03-1401-136 2000T Terrace Door, SMI (NOA)\03-KAW-1401_02b Kawneer 2000T Terrace Door.dwg

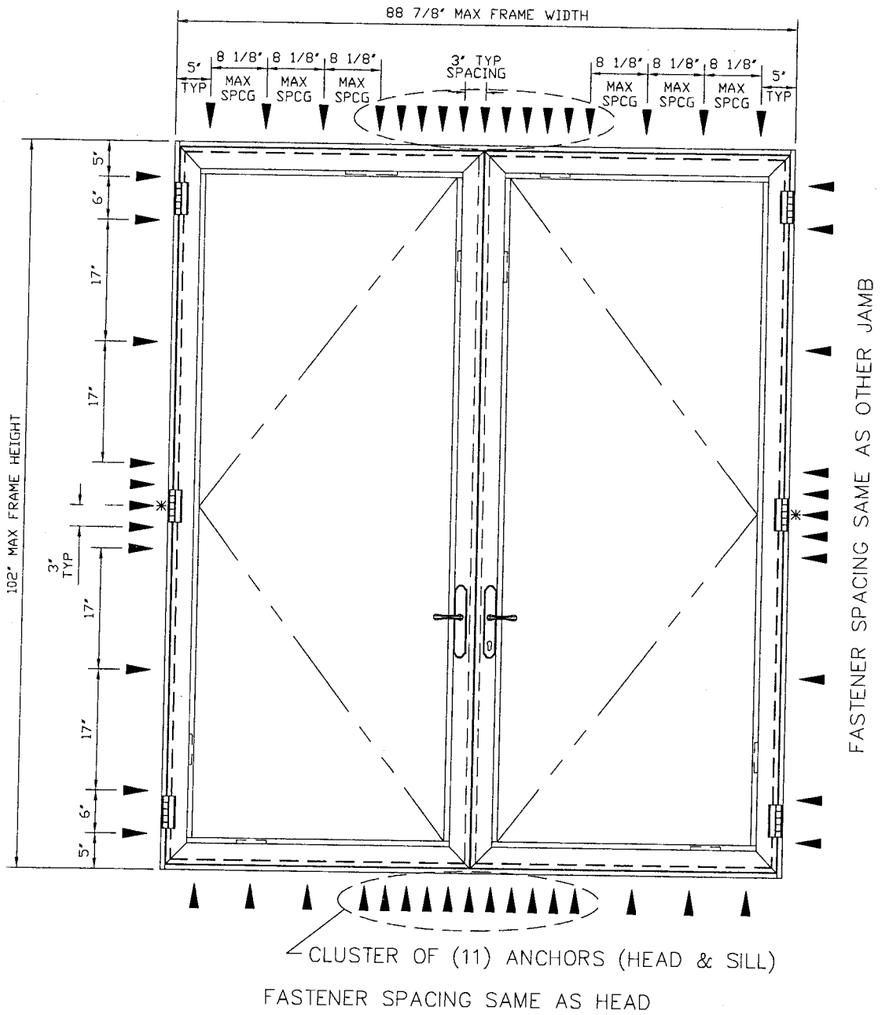


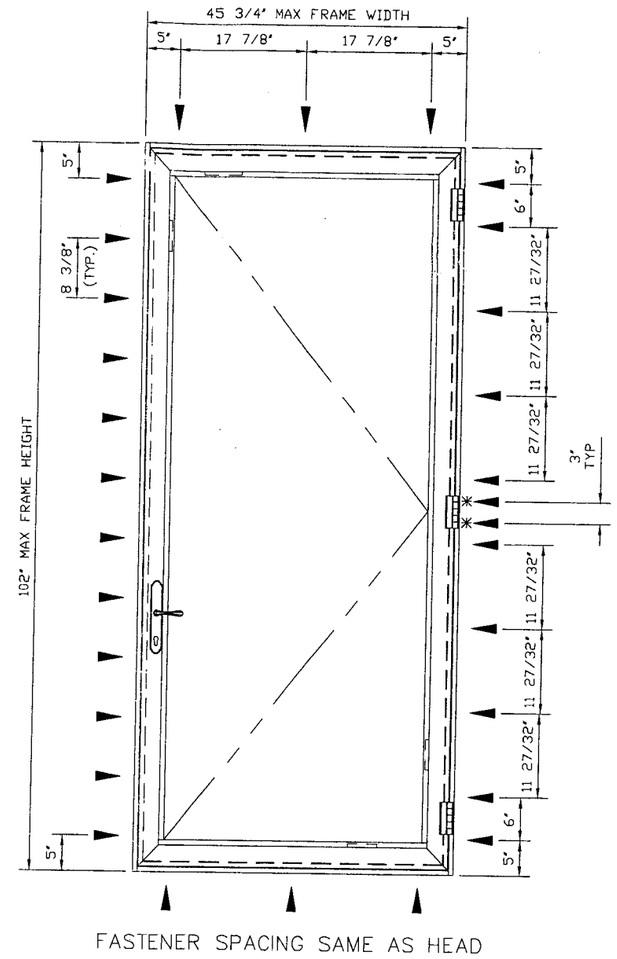


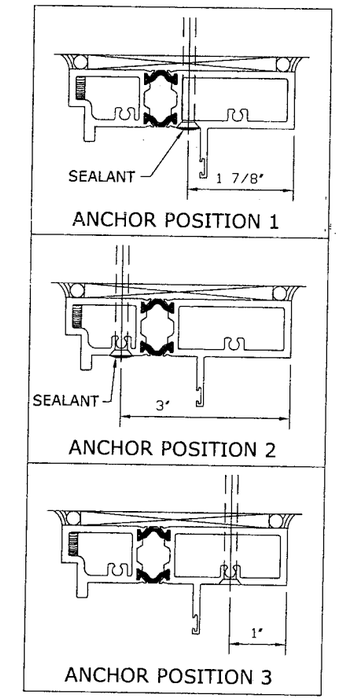


## ANCHOR POSITIONS

REF FASTENER SCHEDULE BELOW

## ANCHOR NOTES:

1. SEE EXTERIOR ELEVATION FOR ANCHOR LOCATIONS AND/OR SPACING.
2. ANCHORS SHALL BE INSTALLED IN ACCORDANCE WITH MANUFACTURERS' RECOMMENDATIONS.
3. ENSURE FULL THREAD ENGAGEMENT TO 1/8" MIN STEEL SUBSTRATE. ENSURE MINIMUM OF 1/2" EDGE DISTANCE.
4. MINIMUM EMBEDMENT SHALL BE AS NOTED IN ANCHOR SCHEDULE. MINIMUM EMBEDMENT AND EDGE DISTANCE EXCLUDES STUCCO, FOAM, BRICK, AND OTHER WALL FINISHES.

## PERIMETER FASTENER LOCATIONS

A36 STEEL SUBSTRATE (1/8" MIN THICKNESS)

DESIGN PRESSURES: +/-100 PSF (GLAZING TYPES G1 OR G2)

### STEEL ANCHOR SCHEDULE

#14 GRADE 5 SHEET METAL SCREW

▼ ANCHOR POSITIONS 1, 2, OR 3

* THESE PERIMETER FASTENERS TO GO THROUGH BUTT HINGE FOR ANCHOR POSITION 2

PRODUCT REVISED
as complying with the Florida Building Code
Acceptance No 09-0121.09
Expiration Date NOV. 23, 2010
By Ishaq I. Chanda
Miami Dade Product Control Division


FRANK L. BENNARDO, P.E.
# PE0046549
03/16/2009

ENGINEERING EXPRESS®
160 SW 12th AVENUE, #106
DEERFIELD BEACH, FL 33442
PH: (954) 354-0660 FAX: (954) 354-0443
WWW.ENGEXP.COM
CERT OF AUTH #9885
A FRANK L. BENNARDO, P.E., INC. INNOVATION

KAWNEER
AN ALCOA COMPANY
555 GUTHRIDGE COURT
NORCROSS, GEORGIA 30092
PHONE (770) 449-5555
FAX (770) 734-1560


2000T OUTSWING TERRACE DOOR
SMALL MISSILE IMPACT
SINGLE DOOR OR PAIR OF DOORS

| REMARKS | DRWN | CHKD | DATE |
|---|---|---|---|
| 07 FBC REVISION | RKB | CL | 12/18/08 |
| BCCO COMMENTS | RKB | CL | 03/16/09 |

03-KAW-1401

SCALE: - 02

PAGE DESCRIPTION:



03/16/2009 - 2:00pm rbartlett F:\01 Project Files\Kawneer (KAW)\2003 Jobs\03-1401-136 2000T Terrace Door, SMI (NOA)\03-KAW-1401_02b Kawneer 2000T Terrace Door.dwg

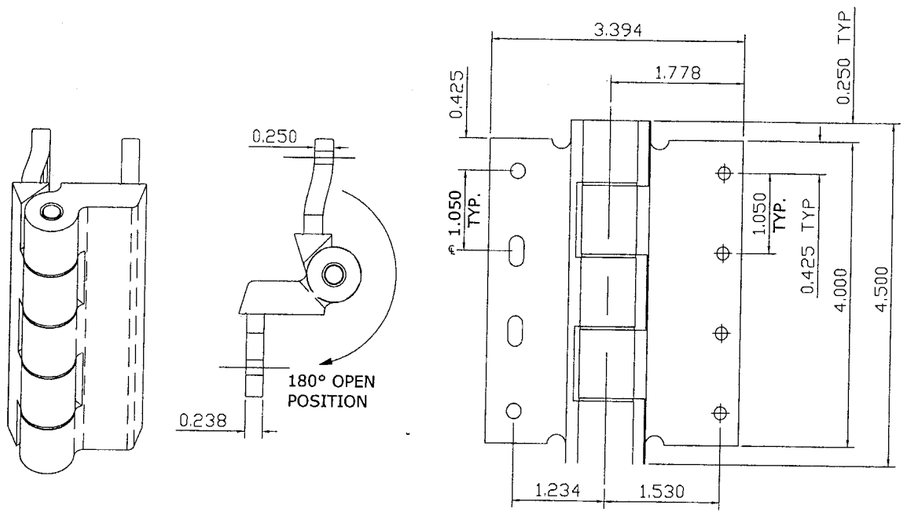


## BUTT HINGE DETAILS

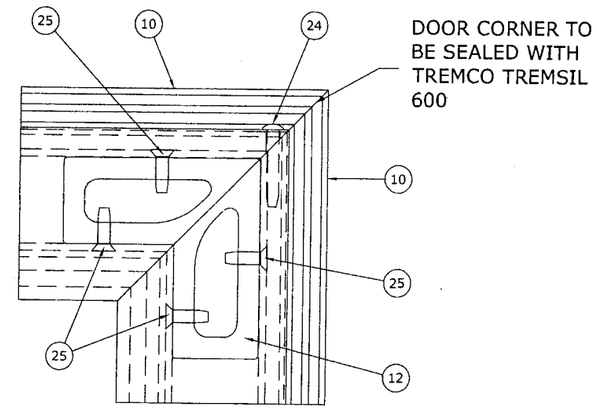


## TYPICAL DOOR CORNER

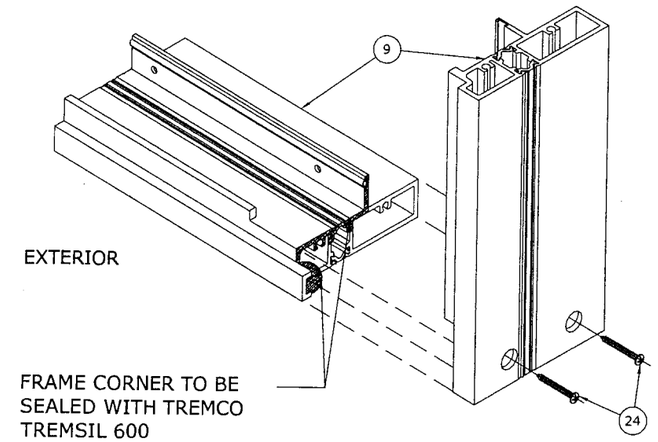


## TYPICAL FRAME CORNER

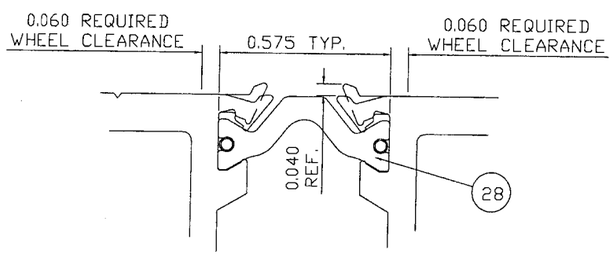


NOTE: ASSEMBLY MUST MEET 900 LBS. MINIMUM SHEAR

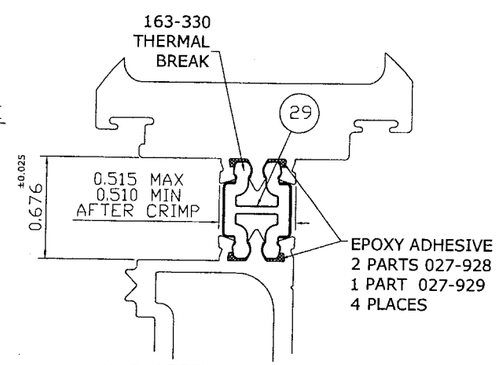


NOTE: ASSEMBLY MUST MEET 2500 LBS. MINIMUM SHEAR

## THERMAL BREAK DETAILS

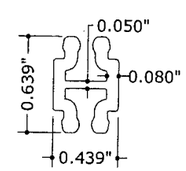


29 ½" THERMAL BREAK

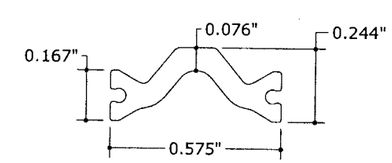


28 14.6 MM OFFSET INSULAR

PRODUCT REVISED
as complying with the Florida Building Code
Acceptance No 09-0121.09
Expiration Date NOV. 25, 2010
By Ishaq I. Chanda
Miami Dade Product Control Division

FRANK L. BENNARDO, P.E.
# PE0046549
03/16/2009

ENGINEERING EXPRESS®
160 SW 12th AVENUE, #106
DEERFIELD BEACH, FL 33442
Ph: (954) 354-0660 Fax: (954) 354-0443
WWW.ENGEXP.COM
CERT OF AUTH #9885
A. FRANK L. BENNARDO, P.E., INC. INNOVATION

KAWNEER AN ALCOA COMPANY
555 GUTHRIDGE COURT
NORCROSS, GEORGIA 30092
PHONE (770) 449-5555
FAX (770) 734-1560

2000T OUTSWING TERRACE DOOR
SMALL MISSILE IMPACT
SINGLE DOOR OR PAIR OF DOORS

| REMARKS | DRWN | CHKD | DATE |
|---|---|---|---|
| '07 FBC REVISION | RKB | CL | 12/18/08 |
| BCCO COMMENTS | RKB | CL | 03/16/09 |

03-KAW-1401
SCALE: - 02
PAGE DESCRIPTION:
-
-

8 9

03/16/2009 - 2:01pm rbartlett F:\01 Project Files\Kawneer (KAW)\2003 Jobs\03-1401-136 2000T Terrace Door, SMI (NOA)\03-KAW-1401_02b Kawneer 2000T Terrace Door.dwg

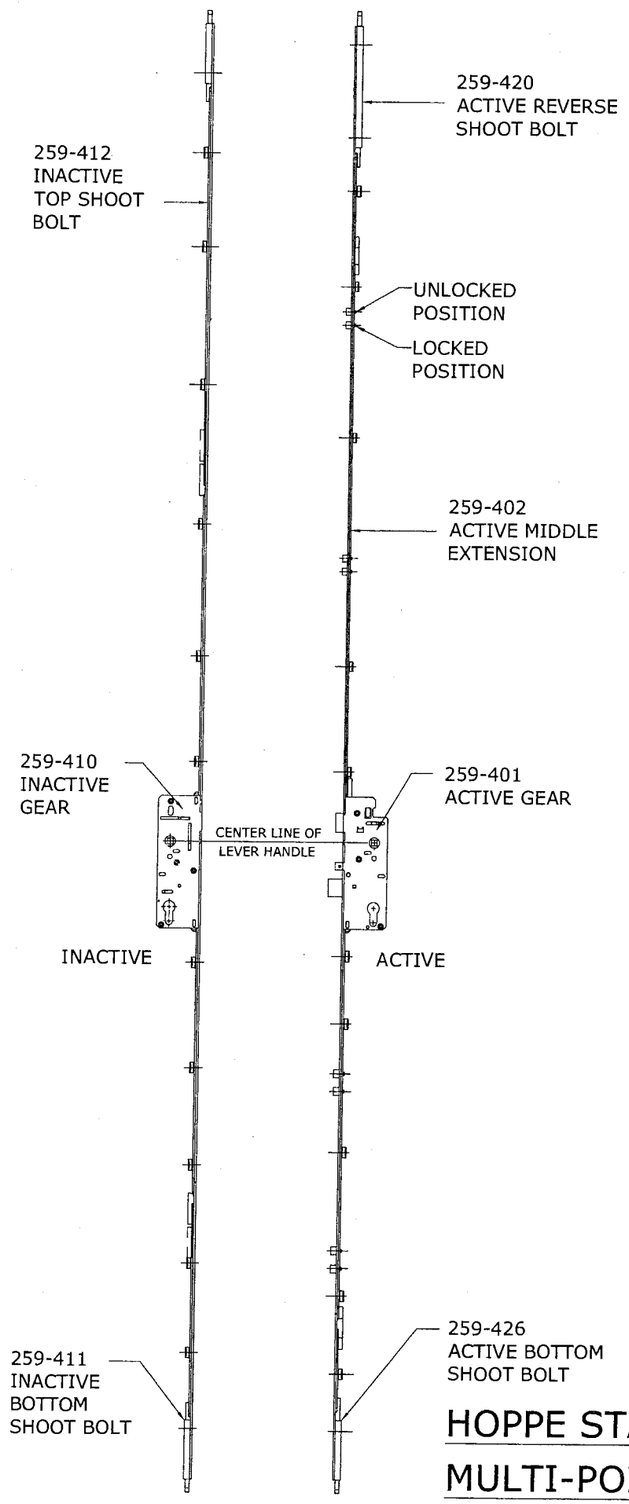


## HOPPE STAINLESS STEEL MULTI-POINT LOCK

# MATERIAL PARTS LIST

| | | | |
|---|---|---|---|
| 1 | 1/4" WEDGE GASKET | 27-901 | EPDM |
| 2 | 3/16" FIXED GASKET | 27-922 | EPDM |
| 3 | Q-LON WEATHERSEAL | 127-043 | POLYURETHANE FOAM |
| 4 | 1/8" GLAZING ROD | 127-049 | BUTYL |
| 5 | SETTING BLOCK | 127-045 | EPDM |
| 6 | 1/4" GLAZING ROD | 127-050 | BUTYL |
| 7 | BEVELED GLASS STOP | 259-056 | 6063-T6 ALUMINUM |
| 8 | SMALL THRESHOLD | 259-081 | 6063-T6 ALUMINUM |
| 9 | FRAME HEAD/SILL/JAMB (259-001/002/351) | 259-201 | 6063-T6 ALUMINUM |
| 10 | DOOR STILE/RAIL (259-031/032/351) | 259-202 | 6063-T6 ALUMINUM |
| 11 | STILE ADAPTER (259-044/047/163-330) | 259-247 | 6063-T6 ALUMINUM |
| 12 | DOOR CORNER CLIP | 259-071 | 6063-T6 ALUMINUM |
| 13 | BUTT HINGE | 259-353 | 6063-T6 ALUMINUM |
| 14 | FRAME SEALING PAD | 127-055 | PVC FOAM |
| 15 | ACTIVE LATCH & DEADBOLT KEEPER | 259-373 | 300 STAINLESS STEEL |
| 16 | HEAD/SILL SHOOT BOLT KEEPER | 259-375 | TURNED BRASS |
| 17 | ACTIVE FOUR POINT GEAR* | 259-401 | 300 STAINLESS STEEL |
| 18 | INACTIVE GEAR* | 259-410 | 300 STAINLESS STEEL |
| 19 | ACTIVE HANDLE/TRIM KIT | 259-559 | NICKEL-BRASS |
| 20 | SQUARE GLASS STOP | 259-054 | 6063-T6 ALUMINUM |
| 21 | INACTIVE HANDLE/TRIM KIT | 259-560 | NICKEL-BRASS |
| 22 | #10 x 3/4" TORX PAN HEAD TFS | 128-507 | 300 STAINLESS STEEL |
| 23 | #10 x 1-3/4" TORX PAN HEAD TFS | 128-535 | 300 STAINLESS STEEL |
| 24 | #12 x 1-1/2" TORX PAN HEAD TFS | 128-536 | 300 STAINLESS STEEL |
| 25 | 1/4-14 x 3/4" TORX FLAT HEAD TFS | 128-537 | 300 STAINLESS STEEL |
| 26 | #8-18 x1" TORX FLAT HEAD SELF DRILLING SCREW | 128-538 | 300 STAINLESS STEEL |
| 27 | ACTIVE MIDDLE EXTENSION | 259-402 | 300 STAINLESS STEEL |
| 28 | 14.6MM OFFSET INSULBAR BY ENSINGER | 259-351 | NYLON |
| 29 | 1/2" THERMAL BREAK W/ ADHESIVE EPOXY | 163-330 | NYLON |

* SEE HOPPE STAINLESS STEEL MULTI-POINT DIAGRAM FOR COMPLETE PARTS BREAK DOWN.

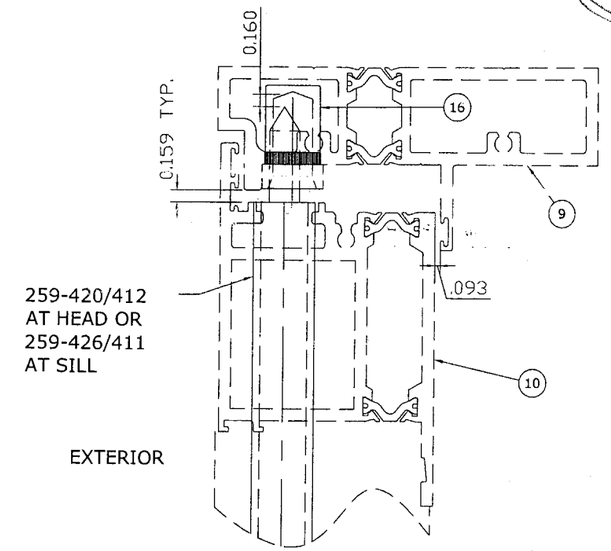


## SHOOT BOLT KEEPER DETAIL

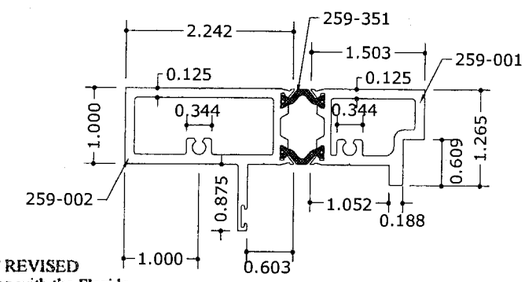


9 FRAME HEAD/SILL/JAMB

PRODUCT REVISED
as complying with the Florida
Building Code
Acceptance No 09-0121.09
Expiration Date NOV 25, 2010
By Shaq I. Chand
Miami Dade Product Control
Division

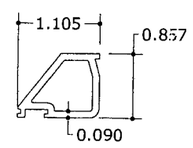


7 BEVELED GLASS STOP

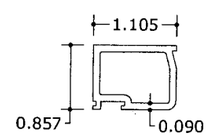


20 SQUARE GLASS STOP

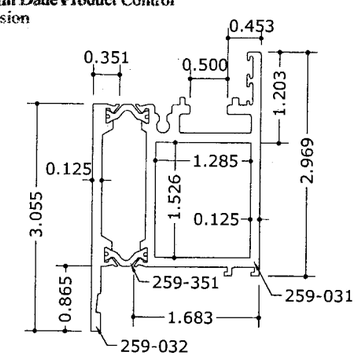


10 DOOR STILE RAIL

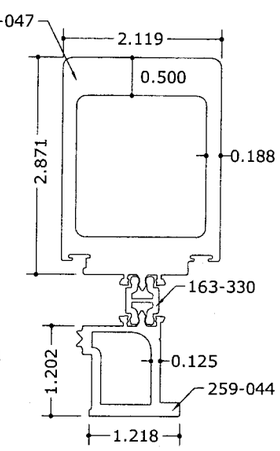


11 DOOR STILE RAIL

FRANK L. BENNARDO, P.E.
# PE0046549

03/16/2009

ENGINEERING EXPRESS®
160 SW 12th AVENUE, #106
DEERFIELD BEACH, FL 33442
Ph: (954) 354-0660 Fax: (954) 354-0443
WWW.ENGEXP.COM
CERT OF AUTH # 985
A. FRANK L. BENNARDO, P.E. INC. INNOVATION

KAWNEER AN ALCOA COMPANY
555 GUTHRIDGE COURT
NORCROSS, GEORGIA 30092
PHONE (770) 449-5555
FAX (770) 734-1560

2000T OUTSWING TERRACE DOOR
SMALL MISSILE IMPACT
SINGLE DOOR OR PAIR OF DOORS

| REMARKS | DRWN | CHKD | DATE |
|---|---|---|---|
| '07 FBC REVISION | RKB | CL | 12/18/08 |
| BCCO COMMENTS | RKB | CL | 03/16/09 |

03-KAW-1401

SCALE: - 02

PAGE DESCRIPTION:

9



F:\01 Project Files\Kawneer (KAW)\2003 Jobs\03-1401-136 2000T Terrace Door, SMI (NOA)\03-KAW-1401_02b Kawneer 2000T Terrace Door.dwg
03/16/2009 - 2:01pm rbartlett