MIAMI-DADE COUNTY
BUILDING CODE COMPLIANCE OFFICE (BCCO)
PRODUCT CONTROL DIVISION

MIAMI-DADE COUNTY, FLORIDA
METRO-DADE FLAGLER BUILDING
140 WEST FLAGLER STREET, SUITE 1603
MIAMI, FLORIDA 33130-1563
(305) 375-2901 FAX (305) 372-6339
www.maimidade.gov/buildingcode

NOTICE OF ACCEPTANCE (NOA)

Miami Wall Systems, Inc.
701 W,25th Street
Hialeah, FL 33010

SCOPE:

This NOA is being issued under the applicable rules and regulations governing the use of construction materials. The documentation submitted has been reviewed by Miami-Dade County Product Control Division and accepted by the Board of Rules and Appeals (BORA) to be used in Miami Dade County and other areas where allowed by the Authority Having Jurisdiction (AHJ).

This NOA shall not be valid after the expiration date stated below. The Miami-Dade County Product Control Division (In Miami Dade County) and/or the AHJ (in areas other than Miami Dade County) reserve the right to have this product or material tested for quality assurance purposes. If this product or material fails to perform in the accepted manner, the manufacturer will incur the expense of such testing and the AHJ may immediately revoke, modify, or suspend the use of such product or material within their jurisdiction. BORA reserves the right to revoke this acceptance, if it is determined by Miami-Dade County Product Control Division that this product or material fails to meet the requirements of the applicable building code. This product is approved as described herein, and has been designed to comply with the Florida Building Code, including the High Velocity Hurricane Zone.

DESCRIPTION: Series 2060 Outswing Aluminum Casement Window – L.M.I.

APPROVAL DOCUMENT: Drawing No. **2060-CW**, titled "Casement Window Series 2060 (L.M.I.), sheets 1 through 7 of 7, dated 1/19/09, prepared by manufacturer, signed and sealed by Jorge E. Valdes, P.E., bearing the Miami-Dade County Product Control Revision stamp with the Notice of Acceptance number and expiration date by the Miami-Dade County Product Control Division.

MISSILE IMPACT RATING: Large and Small Missile Impact Resistant

LABELING: Each unit shall bear a permanent label with the manufacturer's name or logo, city, state and following statement: "Miami-Dade County Product Control Approved", unless otherwise noted herein.

RENEWAL of this NOA shall be considered after a renewal application has been filed and there has been no change in the applicable building code negatively affecting the performance of this product.

TERMINATION of this NOA will occur after the expiration date or if there has been a revision or change in the materials, use, and/or manufacture of the product or process. Misuse of this NOA as an endorsement of any product, for sales, advertising or any other purposes shall automatically terminate this NOA. Failure to comply with any section of this NOA shall be cause for termination and removal of NOA.

ADVERTISEMENT: The NOA number preceded by the words Miami-Dade County, Florida, and followed by the expiration date may be displayed in advertising literature. If any portion of the NOA is displayed, then it shall be done in its entirety.

INSPECTION: A copy of this entire NOA shall be provided to the user by the manufacturer or its distributors and shall be available for inspection at the job site at the request of the Building Official.

This NOA **revises NOA # 08-0611.12** and consists of this page 1 and evidence pages E-1 and E-2, as well as approval document mentioned above.

The submitted documentation was reviewed by **Manuel Perez, P.E.**

MIAMI-DADE COUNTY APPROVED

Miami Walls Systems, Inc.

NOTICE OF ACCEPTANCE: EVIDENCE SUBMITTED

A. DRAWINGS

1. Manufacturer's die drawings and sections.
2. Drawing No **2060-CW**, Sheets 1 through 7 of 7, titled "Casement Window Series 2060 (L.M.I.)", dated 1/19/09, prepared by manufacturer, signed and sealed by Jorge E. Valdes, P.E.

B. TESTS

1. Test reports on: 1) Uniform Static Air Pressure Test, Loading per FBC TAS 202-94
   2) Large Missile Impact Test per FBC, TAS 201-94
   3) Cyclic Wind Pressure Loading per FBC, TAS 203-94

   along with marked-up drawings and installation diagram of aluminum casement windows mulled together, prepared by Fenestration Testing Laboratory, Inc., Test Report No. **FTL-5801**, dated 12/16/08, signed and sealed by Carlos S. Rionda, P.E.
2. Test reports on: 1) Air Infiltration Test, per FBC, TAS 202-94
   2) Uniform Static Air Pressure Test, Loading per FBC TAS 202-94
   3) Water Resistance Test, per FBC, TAS 202-94
   4) Large Missile Impact Test per FBC, TAS 201-94
   5) Cyclic Wind Pressure Loading per FBC, TAS 203-94
   6) Forced Entry Test, per FBC 2411 3.2.1, TAS 202-94

   along with marked-up drawings and installation diagram of aluminum fixed and casement windows mulled together, prepared by Fenestration Testing Laboratory, Inc., Test Report No. **FTL-5595**, dated 06/02/08, signed and sealed by Carlos S. Rionda, P.E.

   (Submitted under previous NOA #08-0611.12)

C. CALCULATIONS

1. Anchor verification calculations and structural analysis, complying with FBC-2004, prepared by, dated 1/21/09, signed and sealed by Jorge E. Valdes, P.E.
   Complies with ASTM E1300-02/03

D. QUALITY ASSURANCE

1. Miami Dade Building Code Compliance Office (BCCO).

E. MATERIAL CERTIFICATIONS

1. Notice of Acceptance No. **05-1208.02** issued to **E.I. DuPont DeNemours & Co.**, Inc. for their "**DuPont Butacite PVB Interlayer**" dated 01/05/06, expiring on 12/11/10.

Manuel Perez

Manuel Perez, P.E.
Product Control Examiner
NOA No. 09-0122.09
Expiration Date: August 7, 2013
Approval Date: March 4, 2009

NOTICE OF ACCEPTANCE: EVIDENCE SUBMITTED

F. STATEMENTS

1. Statement letter of conformance, dated January 12, 2009, signed and sealed by Jorge E. Valdes, P.E.
2. Statement letter of no financial interest, dated January 12, 2009, signed and sealed by Jorge E. Valdes, P.E.

G. OTHER

1. Notice of Acceptance No. **08-0611.12**, issued to Miami Wall Systems, for their Series 2060 Aluminum Casement Window – Large Missile, approved on 08/07/08 and expiring on 08/07/13.

Manuel Perez, P.E.
Product Control Examiner
NOA No. 09-0122.09
Expiration Date: August 7, 2013
Approval Date: March 4, 2009

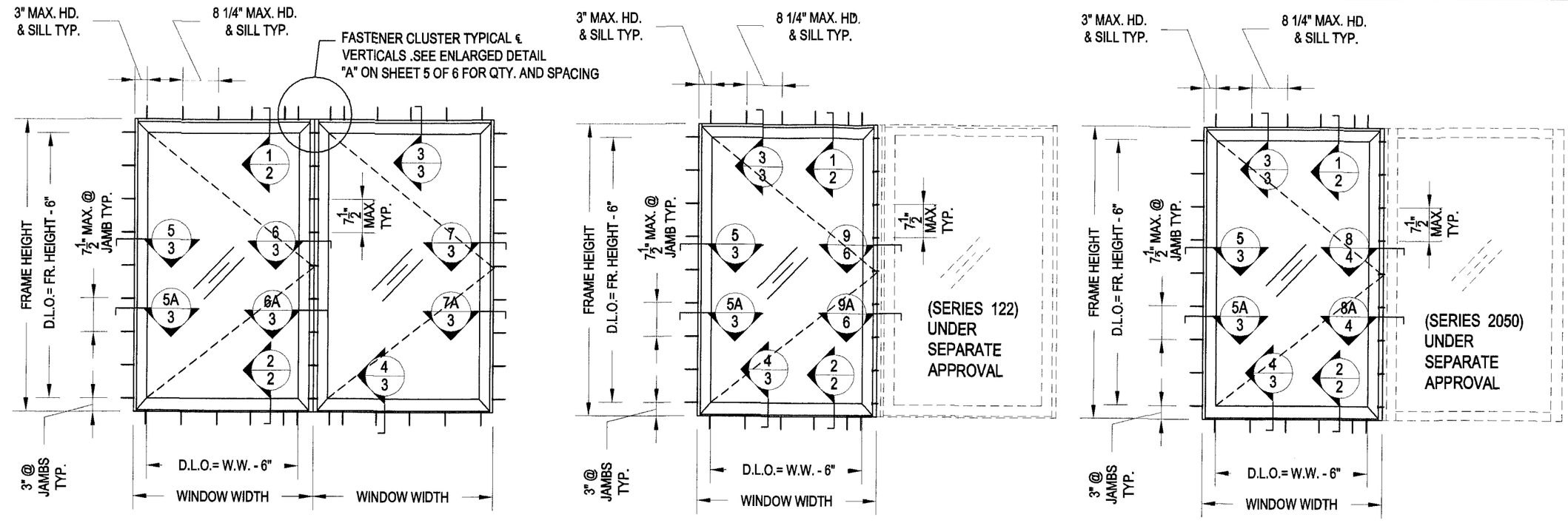

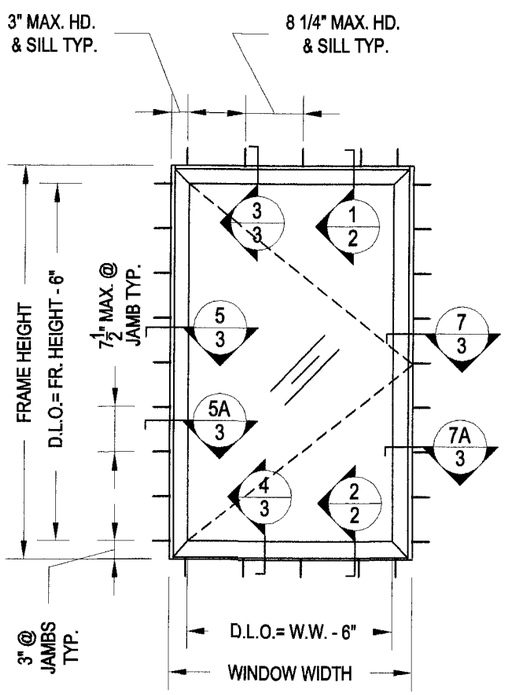

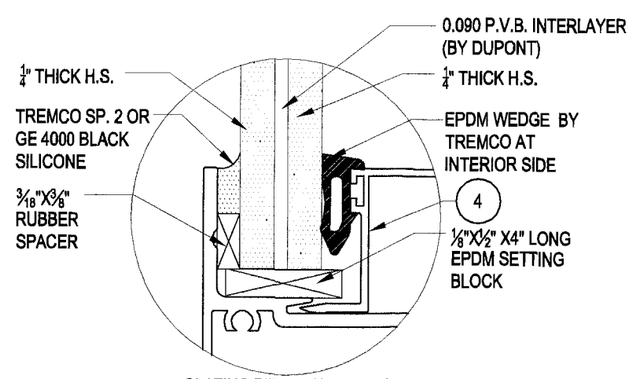

GLAZING DETAIL (OPTION 1)
(9/16" LAMINATED GLASS)

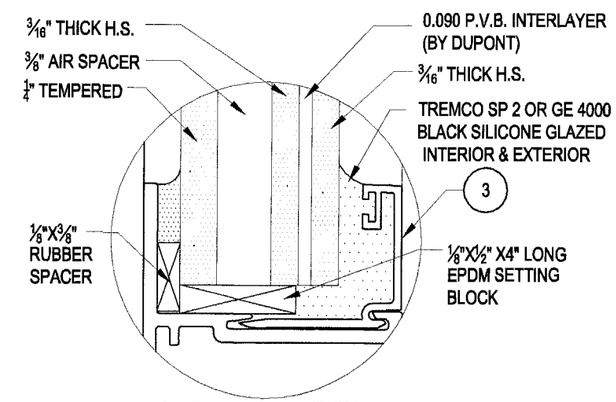

GLAZING DETAIL (OPTION 2)
(1 3/32" INSULATED LAMINATED GLASS)

GENERAL NOTES:

1. THIS PRODUCT HAS BEEN DESIGNED & TESTED IN ACCORDANCE WITH THE 2007 FLORIDA BUILDING CODE (HIGH VELOCITY HURRICANE ZONE)
2. FRAME HEAD AND SILL USE SAME FASTENER SPACING
3. FRAME JAMBS USE SAME FASTENER SPACING
4. THIS PRODUCT IS LARGE MISSILE IMPACT RATED (L.M.I). ITS INSTALLATION IS MANDATORY IN STRUCTURES AT H.V.H.Z. WHERE OPENING HAS NOT IMPACT SHUTTERS & IS LOCATED UP TO 30 FT. ABOVE GRADE.
5. SHUTTERS ARE NOT REQUIRED.
6. WOOD BUCKS NOT BY M.W.S. MUST SUSTAIN LOADS IMPOSED BY GLAZING SYSTEM & TRANSFER THEM TO THE BUILDING STRUCTURE.
7. SEE CHARTS ON SHEETS 2, 4 & 5 FOR LOAD CAPACITIES, MULLION (IF REQUIRED) AND ANCHOR REQUIREMENTS. THE LOWEST VALUE FROM THESE CHARTS SHALL BE THE ALLOWABLE LOAD FOR THE SYSTEM.

PRODUCT REVISED as complying with the Florida Building Code
Acceptance No. 09-0122.09
Expiration Date AUG. 7, 2013
By Manuel Perez
Miami Dade Product Control Division

Jorge E. Valdes
Fla. PE# 67398
1/21/09

Miami Wall Systems, Inc.
701 West 25th Street
Hialeah, Florida. 33010
Phone:(305) 888-2300 Fax:(305) 888-3058

CASEMENT WINDOW SERIES 2060 (L.M.I)

WINDOW ELEVATIONS
GENERAL NOTES

NO.	DATE	REVISION

DATE: 1/19/2009
SCALE: AS NOTED
DWG. BY: L.R.A.
CHK. BY: JV
DWG NO.: 2060-CW
SHEET 1 OF 7

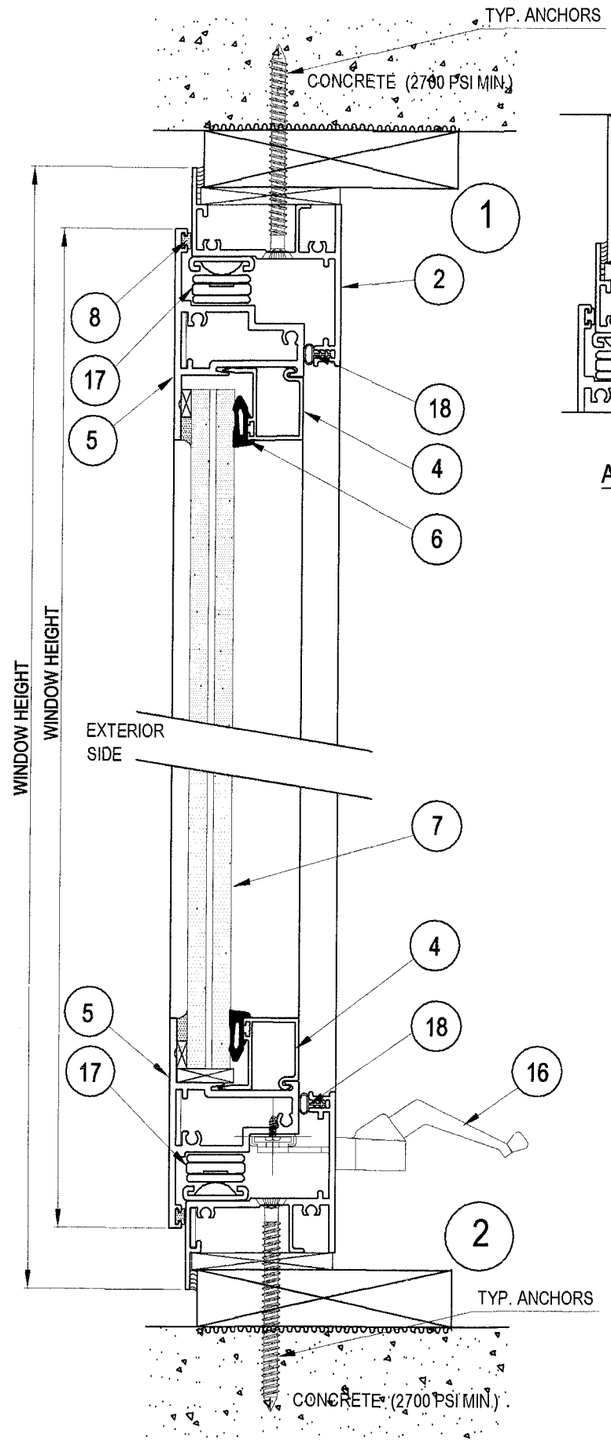

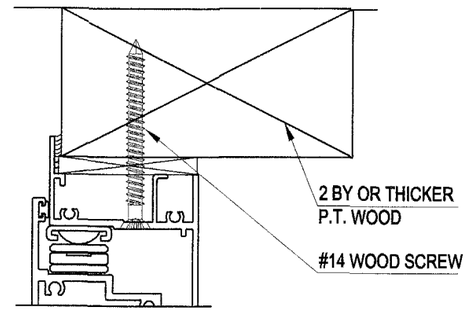

ANCHORAGE OPTION INTO WOOD

FRAME DIMENSIONS (INCHES)		FRAME ALLOWABLE DESIGN PRESSURE	
WIDTH	HEIGHT	POSITIVE	NEGATIVE
28	40	+ 130.0 p.s.f.	-130.0 p.s.f.
32		+ 130.0 p.s.f.	-130.0 p.s.f.
36		+ 130.0 p.s.f.	-130.0 p.s.f.
40		+ 130.0 p.s.f.	-130.0 p.s.f.
44		+ 130.0 p.s.f.	-130.0 p.s.f.
48		+ 130.0 p.s.f.	-130.0 p.s.f.
52		+ 130.0 p.s.f.	-130.0 p.s.f.
56		+ 130.0 p.s.f.	-130.0 p.s.f.
28	48	+ 130.0 p.s.f.	-130.0 p.s.f.
32		+ 130.0 p.s.f.	-130.0 p.s.f.
36		+ 130.0 p.s.f.	-130.0 p.s.f.
40		+ 130.0 p.s.f.	-130.0 p.s.f.
44		+ 130.0 p.s.f.	-130.0 p.s.f.
48		+ 130.0 p.s.f.	-130.0 p.s.f.
52		+ 130.0 p.s.f.	-130.0 p.s.f.
56		+ 110.0 p.s.f.	- 110.0 p.s.f.
28	52	+ 130.0 p.s.f.	-130.0 p.s.f.
32		+ 130.0 p.s.f.	-130.0 p.s.f.
36		+ 130.0 p.s.f.	-130.0 p.s.f.
40		+ 130.0 p.s.f.	-130.0 p.s.f.
44		+ 130.0 p.s.f.	-130.0 p.s.f.
48		+ 130.0 p.s.f.	-130.0 p.s.f.
52		+ 110.0 p.s.f.	- 110.0 p.s.f.
56		+ 110.0 p.s.f.	- 110.0 p.s.f.
28	56	+ 130.0 p.s.f.	-130.0 p.s.f.
32		+ 130.0 p.s.f.	-130.0 p.s.f.
36		+ 130.0 p.s.f.	-130.0 p.s.f.
40		+ 130.0 p.s.f.	-130.0 p.s.f.
44		+ 130.0 p.s.f.	-130.0 p.s.f.
48		+ 110.0 p.s.f.	- 110.0 p.s.f.
52		+ 110.0 p.s.f.	- 110.0 p.s.f.

FRAME DIMENSIONS (INCHES)		FRAME ALLOWABLE DESIGN PRESSURE	
WIDTH	HEIGHT	POSITIVE	NEGATIVE
28	60	+ 130.0 p.s.f.	-130.0 p.s.f.
32		+ 130.0 p.s.f.	-130.0 p.s.f.
36		+ 130.0 p.s.f.	-130.0 p.s.f.
40		+ 130.0 p.s.f.	-130.0 p.s.f.
44		+ 110.0 p.s.f.	- 110.0 p.s.f.
48		+ 110.0 p.s.f.	- 110.0 p.s.f.
28	64	+ 130.0 p.s.f.	-130.0 p.s.f.
32		+ 130.0 p.s.f.	-130.0 p.s.f.
36		+ 130.0 p.s.f.	-130.0 p.s.f.
40		+ 130.0 p.s.f.	-130.0 p.s.f.
44		+ 110.0 p.s.f.	- 110.0 p.s.f.
46		+ 110.0 p.s.f.	- 110.0 p.s.f.
28	68	+ 130.0 p.s.f.	- 130.0 p.s.f.
32		+ 110.0 p.s.f.	- 110.0 p.s.f.
36		+ 110.0 p.s.f.	- 110.0 p.s.f.
40		+ 110.0 p.s.f.	- 110.0 p.s.f.
44		+ 110.0 p.s.f.	- 110.0 p.s.f.
28	72	+ 130.0 p.s.f.	- 130.0 p.s.f.
32		+ 110.0 p.s.f.	- 110.0 p.s.f.
36		+ 110.0 p.s.f.	- 110.0 p.s.f.
40		+ 110.0 p.s.f.	- 110.0 p.s.f.
42		+ 110.0 p.s.f.	- 110.0 p.s.f.
28	76	+ 130.0 p.s.f.	- 130.0 p.s.f.
32		+ 110.0 p.s.f.	- 110.0 p.s.f.
36		+ 110.0 p.s.f.	- 110.0 p.s.f.
40		+ 110.0 p.s.f.	- 110.0 p.s.f.
28	80	+ 130.0 p.s.f.	- 130.0 p.s.f.
32		+ 110.0 p.s.f.	- 110.0 p.s.f.
34		+ 110.0 p.s.f.	- 110.0 p.s.f.

TYPICAL ANCHORS (SEE SHEET 1 FOR SPACING)

(A) $\frac{1}{4}$" TAPCON BY ELCO INTO CONCRETE WITH 1 $\frac{1}{4}$" MIN. EMBEDMENT & 2" MIN. EDGE DIST.

(B) #14-20 KWIK FLEX SCREW BY HILTI INTO METAL STUCTURES WITH $\frac{1}{8}$" THICKNESS (A36 STEEL OR ALUM. ALLOY 6030-T5 MIN.) & 1" MIN. EDGE DIST.

(C) #14 WOOD SCREW INTO WOOD STUCTURES WITH 1 $\frac{1}{4}$" MIN. EMBEDMENT & 1 $\frac{1}{2}$" MIN. EDGE DIST.

(D) $\frac{1}{4}$" TAPCON BY ELCO INTO CONCRETE THROUGH 1" BY PRE-TREATED WOOD WITH 1 $\frac{1}{4}$" MIN. EMBEDMENT INTO CONCRETE & 2" MIN. EDGE DIST.

PRODUCT REVIEW
Accepted with the Florida Building Code
Acceptance No. 09-0122.09
Expiration Date AUG. 7, 2013
By
Miami-Dade Product Control Division

Jorge E. Valdes
Fla. PE# 67398
1/21/09

Miami Wall Systems, Inc.
701 West 25th Street
Hialeah, Florida. 33010
Phone:(305) 888-2300 Fax:(305) 888-3058

CASEMENT WINDOW SERIES 2060 (L.M.I)

SECTIONS & PRESSURE CHART

NO.	DATE	REVISION

DATE: 1/19/2009
SCALE: AS NOTED
DWG. BY: L.R.A.
CHK. BY: JV
DWG NO.: 2060-CW
SHEET 2 OF 7

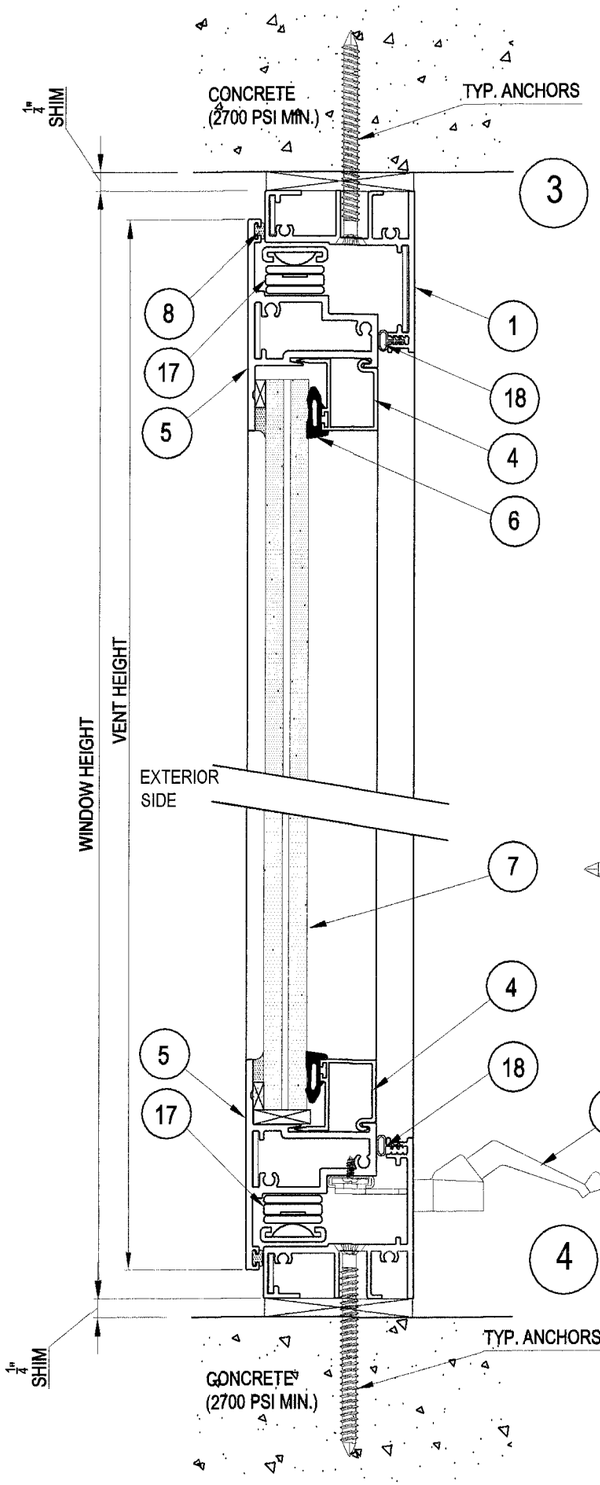

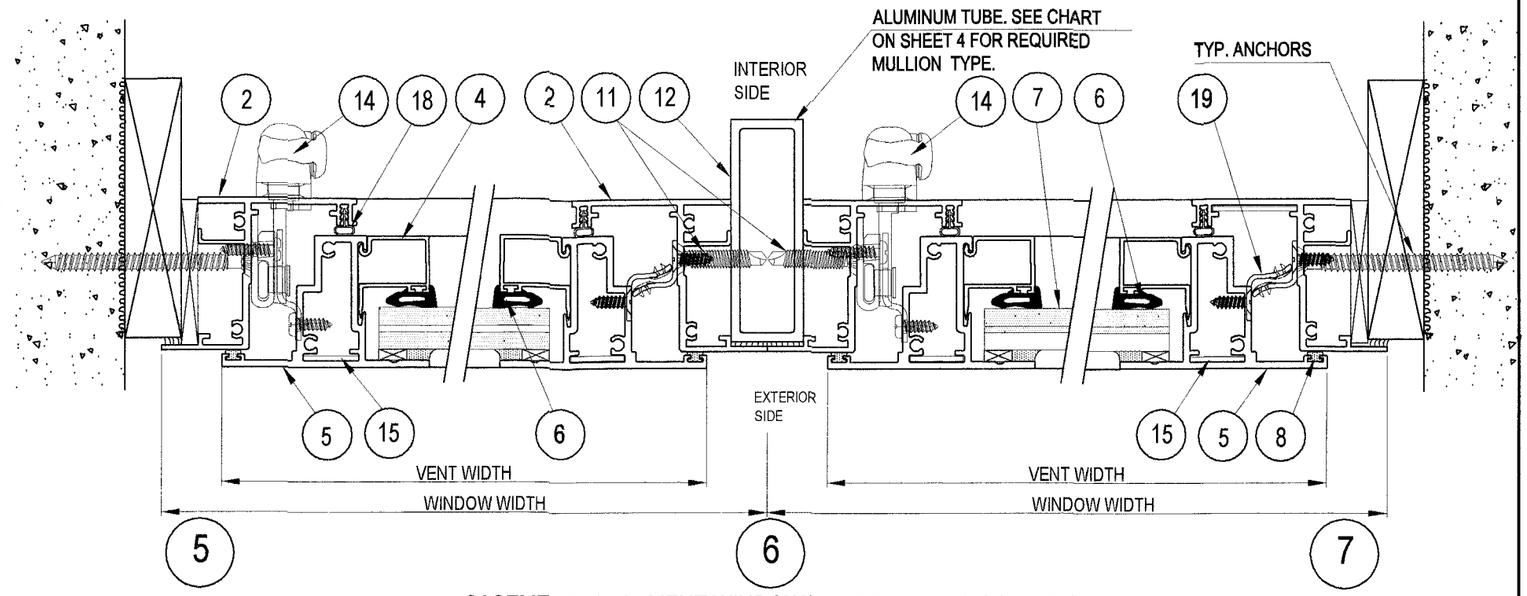

CASEMENT- CASEMENT WINDOWS UNEQUAL LEG CONDITION

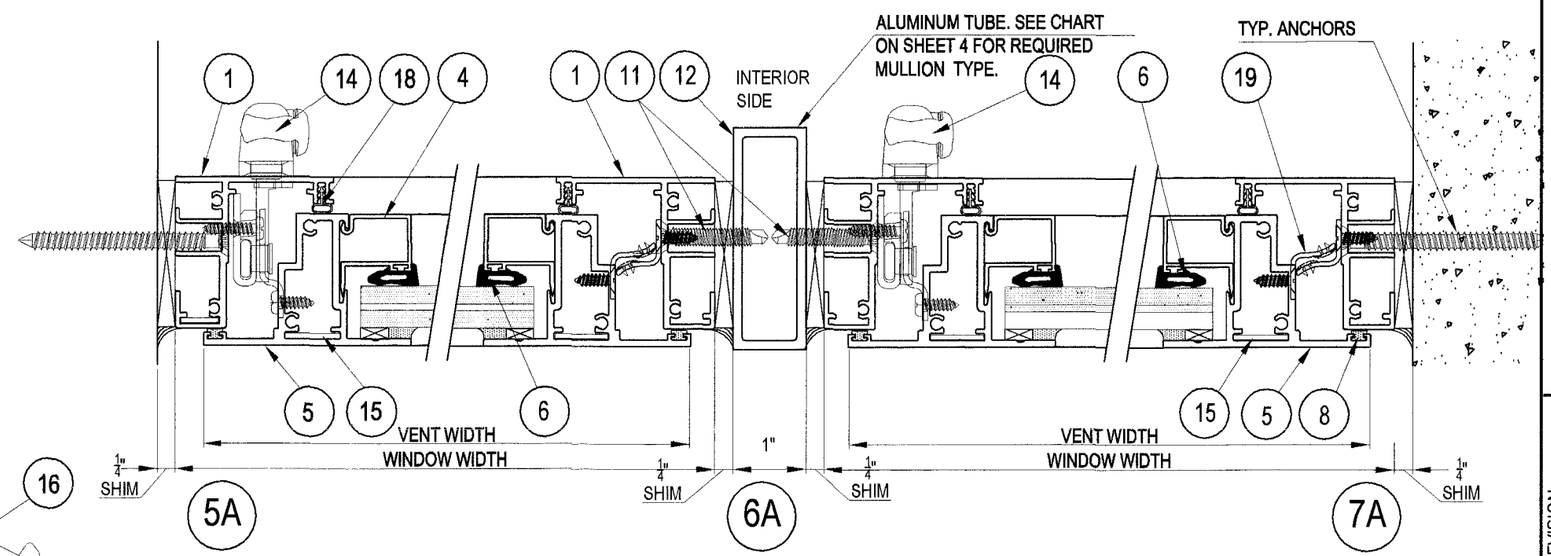

CASEMENT- CASEMENT WINDOWS EQUAL LEG CONDITION

PRODUCT REVIEWED
09-0122.09
AUG. 7, 2013
By Manuel Perez

Jorge E. Valdes
Fla. PE# 67398
1/21/09

Miami Wall Systems, Inc.
701 West 25th Street
Hialeah, Florida. 33010
Phone:(305) 888-2300 Fax:(305) 888-3058

CASEMENT WINDOW SERIES 2060 (L.M.I)

SECTIONS

NO.	DATE	REVISION

DATE: 1/19/2009
SCALE: AS NOTED
DWG. BY: L.R.A.
CHK. BY: JV
DWG NO.: 2060-CW
SHEET 3 OF 7

NOMINAL DIMENSIONS (INCHES)		MULLION ALLOWABLE DESIGN PRESSURE (p.s.f.) POSITIVE/NEGATIVE		
WIDTH (W)	HEIGHT (H)	MULLION TYPE 1	MULLION TYPE 2	MULLION TYPE 3
32	40	+ - 130.0	+ - 130.0	+ - 130.0
36		+ - 130.0	+ - 130.0	+ - 130.0
40		+ - 130.0	+ - 130.0	+ - 130.0
44		+ - 130.0	+ - 130.0	+ - 130.0
48		+ - 130.0	+ - 130.0	+ - 130.0
52		+ - 130.0	+ - 130.0	+ - 130.0
56		+ - 130.0	+ - 130.0	+ - 130.0
60		+ - 130.0	+ - 130.0	+ - 130.0
64		+ - 130.0	+ - 130.0	+ - 130.0
32	46	+ - 130.0	+ - 130.0	+ - 130.0
36		+ - 130.0	+ - 130.0	+ - 130.0
40		+ - 130.0	+ - 130.0	+ - 130.0
44		+ - 130.0	+ - 130.0	+ - 130.0
48		+ - 130.0	+ - 130.0	+ - 130.0
52		+ - 130.0	+ - 130.0	+ - 130.0
56		+ - 130.0	+ - 130.0	+ - 130.0
60		+ - 130.0	+ - 130.0	+ - 130.0
32	52	+ - 130.0	+ - 130.0	+ - 130.0
36		+ - 130.0	+ - 130.0	+ - 130.0
40		+ - 130.0	+ - 130.0	+ - 130.0
44		+ - 130.0	+ - 130.0	+ - 130.0
48		+ - 130.0	+ - 130.0	+ - 130.0
52		+ - 130.0	+ - 130.0	+ - 130.0
56		+ - 130.0	+ - 130.0	+ - 130.0

NOMINAL DIMENSIONS (INCHES)		MULLION ALLOWABLE DESIGN PRESSURE (p.s.f.) POSITIVE/NEGATIVE		
WIDTH (W)	HEIGHT (H)	MULLION TYPE 1	MULLION TYPE 2	MULLION TYPE 3
32	58	+ - 130.0	+ - 130.0	+ - 130.0
36		+ - 130.0	+ - 130.0	+ - 130.0
40		+ - 130.0	+ - 130.0	+ - 130.0
44		+ - 130.0	+ - 130.0	+ - 130.0
48		+ - 130.0	+ - 130.0	+ - 130.0
50		+ - 130.0	+ - 130.0	+ - 130.0
32	64	+ - 130.0	+ - 130.0	+ - 130.0
36		+ - 130.0	+ - 130.0	+ - 130.0
40		+ - 130.0	+ - 130.0	+ - 130.0
44		+ - 130.0	+ - 130.0	+ - 130.0
46		+ - 130.0	+ - 130.0	+ - 130.0
32	70	-	+ -110.0	+ -110.0
36		-	+ -110.0	+ -110.0
40		-	+ -110.0	+ -110.0
32	76	-	-	+ -110.0
36		-	-	+ -110.0
38		-	-	+ -110.0
32	80	-	-	+ -110.0
34		-	-	+ -110.0

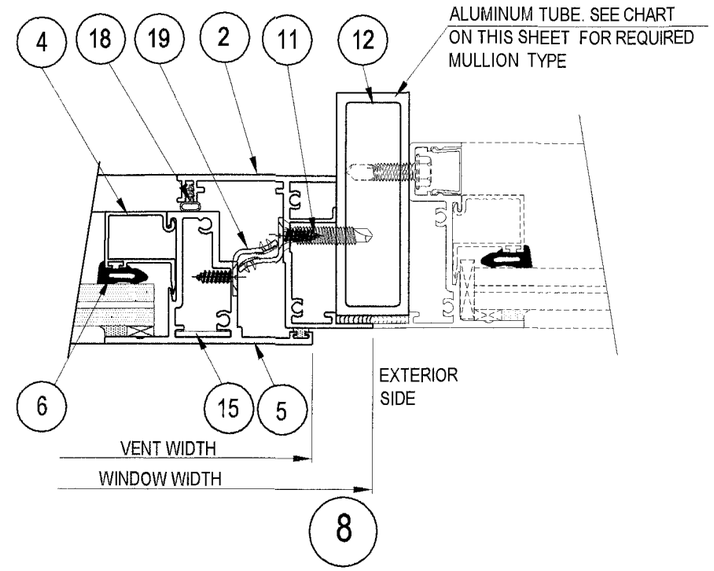

CASEMENT- FIXED WINDOWS UNEQUAL LEG CONDITION

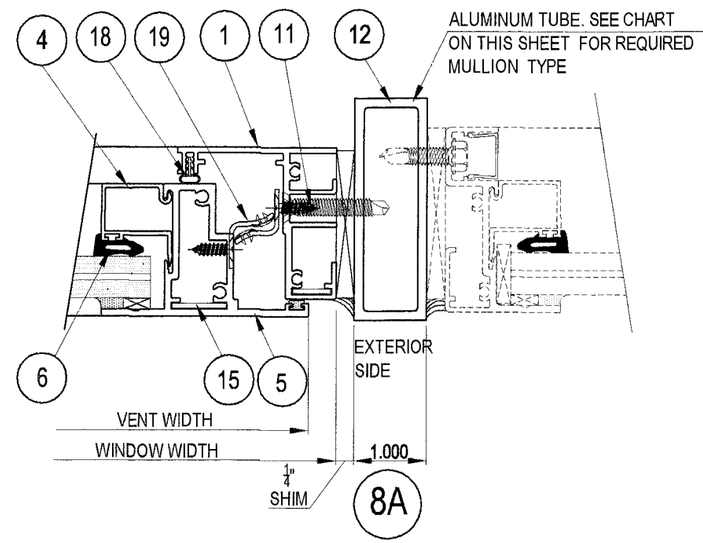

CASEMENT- FIXED WINDOWS EQUAL LEG CONDITION

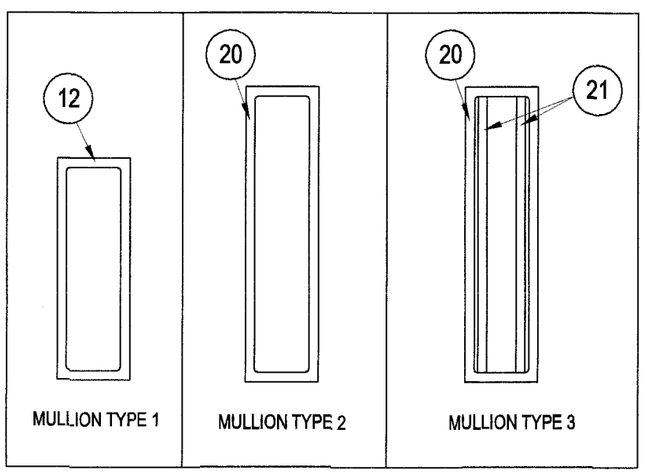

TYP. MULLION DETAILS

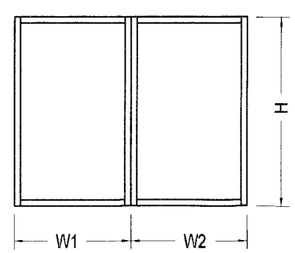

$$\text{WIDTH (W)} = \frac{W1 + W2}{2}$$

PRODUCT APPROVED
AS CONFORMING TO FLORIDA
DATE: 09-0122.09
EXPIRATION DATE: AUG 7, 2013
BY: Manuel Serra

Jorge E. Valdes
Fla. PE# 67398
1/21/09

Miami Wall Systems, Inc.
701 West 25th Street
Hialeah, Florida. 33010
Phone:(305) 888-2300 Fax:(305) 888-3058

CASEMENT WINDOW SERIES 2060 (L.M.I.)

SECTIONS & MULLION CHART

NO.	DATE	REVISION

DATE: 1/19/2009
SCALE: AS NOTED
DWG. BY: L.R.A.
CHK. BY: JV
DWG NO.: 2060-CW
SHEET 4 OF 7

NOMINAL DIMENSIONS (INCHES)		ANCHOR DESIGN LOAD CAPACITY (p.s.f.) POSITIVE/NEGATIVE					
WIDTH	HEIGHT	TYPE A2	TYPE B2	TYPE C2	TYPE D2	TYPE C3	TYPE D3
32	40	+-130.0	+-130.0	+-130.0	+-130.0	+-130.0	+-130.0
36		+-130.0	+-130.0	+-130.0	+-130.0	+-130.0	+-130.0
40		+-130.0	+-130.0	+-130.0	+-130.0	+-130.0	+-130.0
44		+-130.0	+-130.0	+-130.0	+-130.0	+-130.0	+-130.0
48		+-130.0	+-130.0	+-130.0	+-130.0	+-130.0	+-130.0
52		+-130.0	+-130.0	+-130.0	+-130.0	+-130.0	+-130.0
56		+-130.0	+-130.0	+-130.0	+-130.0	+-130.0	+-130.0
60		+-130.0	+-130.0	+-130.0	+-130.0	+-130.0	+-130.0
64		+-130.0	+-130.0	+-130.0	+-130.0	+-130.0	+-130.0
32	46	+-130.0	+-130.0	+-130.0	+-130.0	+-130.0	+-130.0
36		+-130.0	+-130.0	+-130.0	+-130.0	+-130.0	+-130.0
40		+-130.0	+-130.0	+-130.0	+-130.0	+-130.0	+-130.0
44		+-130.0	+-130.0	+-130.0	+-130.0	+-130.0	+-130.0
48		+-130.0	+-130.0	+-130.0	+-130.0	+-130.0	+-130.0
52		+-130.0	+-130.0	+-130.0	+-130.0	+-130.0	+-130.0
56		+-130.0	+-130.0	+-130.0	+-130.0	+-130.0	+-130.0
60		+-130.0	+-130.0	+-130.0	+-130.0	+-130.0	+-130.0
32	52	+-130.0	+-130.0	+-130.0	+-130.0	+-130.0	+-130.0
36		+-130.0	+-130.0	+-130.0	+-130.0	+-130.0	+-130.0
40		+-130.0	+-130.0	+-130.0	+-130.0	+-130.0	+-130.0
44		+-130.0	+-130.0	+-130.0	+-130.0	+-130.0	+-130.0
48		+-130.0	+-130.0	+-130.0	+-130.0	+-130.0	+-130.0
52		+-130.0	+-130.0	+-130.0	+-130.0	+-130.0	+-130.0
56		+-130.0	+-130.0	+-130.0	+-130.0	+-130.0	+-130.0
32	58	+-130.0	+-130.0	+-130.0	+-130.0	+-130.0	+-130.0
36		+-130.0	+-130.0	+-130.0	+-130.0	+-130.0	+-130.0
40		+-130.0	+-130.0	+-130.0	+-130.0	+-130.0	+-130.0
44		+-130.0	+-130.0	+-130.0	+-130.0	+-130.0	+-130.0
48		+-130.0	+-130.0	+-130.0	+-130.0	+-130.0	+-130.0
50		+-130.0	+-130.0	+-130.0	+-130.0	+-130.0	+-130.0
32	64	+-130.0	+-130.0	+-130.0	+-130.0	+-130.0	+-130.0
36		+-130.0	+-130.0	+-130.0	+-130.0	+-130.0	+-130.0
40		+-130.0	+-130.0	+-123.7	+-125.0	+-130.0	+-130.0
44		+-130.0	+-130.0	+-117.8	+-119.1	+-130.0	+-130.0
46		+-130.0	+-130.0	+-115.4	+-116.7	+-130.0	+-130.0
32	70	+-130.0	+-130.0	+-126.0	+-127.3	+-130.0	+-130.0
36		+-130.0	+-130.0	+-116.3	+-117.5	+-130.0	+-130.0
40		+-130.0	+-130.0	+-108.9	+-110.0	+-130.0	+-130.0
32	76	+-130.0	+-130.0	+-113.4	+-114.6	+-130.0	+-130.0
36		+-130.0	+-130.0	+-104.3	+-105.4	+-130.0	+-130.0
38		+-130.0	+-130.0	+-100.5	+-101.6	+-130.0	+-130.0
32	80	+-130.0	+-130.0	+-106.3	+-107.4	+-130.0	+-130.0
34		+-130.0	+-130.0	+-101.6	+-102.7	+-130.0	+-130.0

ANCHORS TYPES (SEE SHEET 2 FOR DESCRIPTION)

A2 → (2) ANCHORS TYPE 'A' AT EACH SIDE OF MULLION
B2 → (2) ANCHORS TYPE 'B' AT EACH SIDE OF MULLION
C2 → (2) ANCHORS TYPE 'C' AT EACH SIDE OF MULLION
D2 → (2) ANCHORS TYPE 'D' AT EACH SIDE OF MULLION
C3 → (3) ANCHORS TYPE 'C' AT EACH SIDE OF MULLION
D3 → (3) ANCHORS TYPE 'D' AT EACH SIDE OF MULLION

BALANCE OF ANCHORS TO BE SPACED AS SHOWN ON SHEET 1

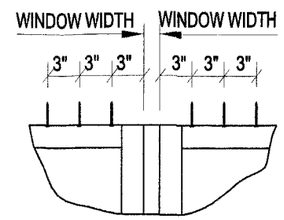

(3) ANCHORS AT EACH SIDE OF MULLION TYP. TOP & BOTTOM

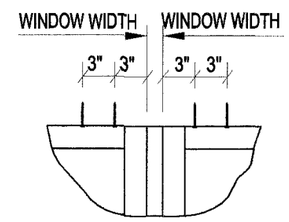

(2) ANCHORS AT EACH SIDE OF MULLION TYP. TOP & BOTTOM

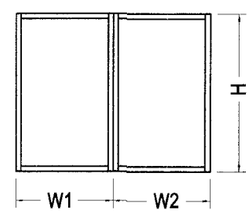

$$\text{WIDTH (W)} = \frac{W1 + W2}{2}$$

PRODUCT REVIEWED
in compliance with the Florida
09.0122.09
AUG. 7, 2013

Jorge E. Valdes
Fla. PE# 67398
1/21/09

Miami Wall Systems, Inc.
701 West 25th Street
Hialeah, Florida. 33010
Phone:(305) 888-2300 Fax:(305) 888-3058

CASEMENT WINDOW SERIES 2060 (L.M.I.)

ANCHOR LOAD CAPACITY CHART

NO.	DATE	REVISION

DATE: 1/19/2009
SCALE: AS NOTED
DWG. BY: L.R.A.
CHK. BY: JV
DWG NO.: 2060-CW
SHEET 5 OF 7

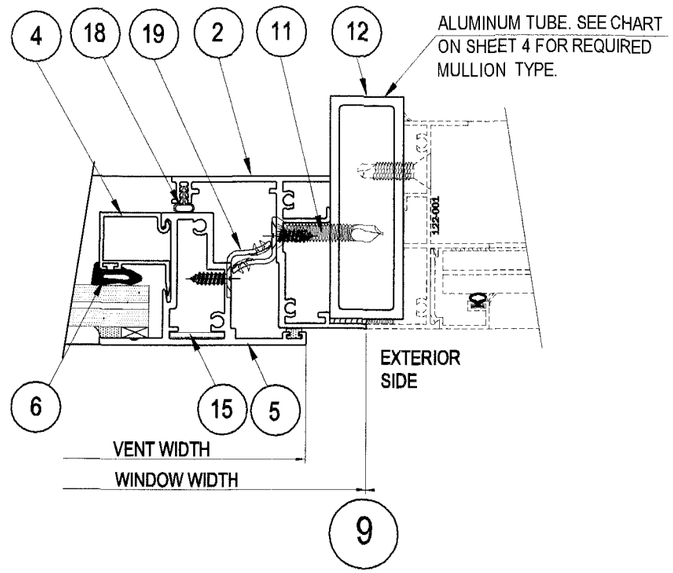

CASEMENT- FIXED WINDOWS UNEQUAL LEG CONDITION

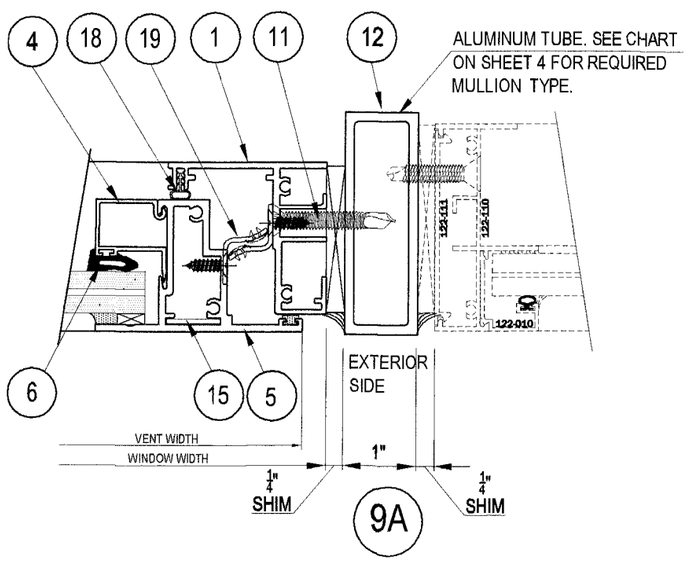

CASEMENT- FIXED WINDOWS EQUAL LEG CONDITION

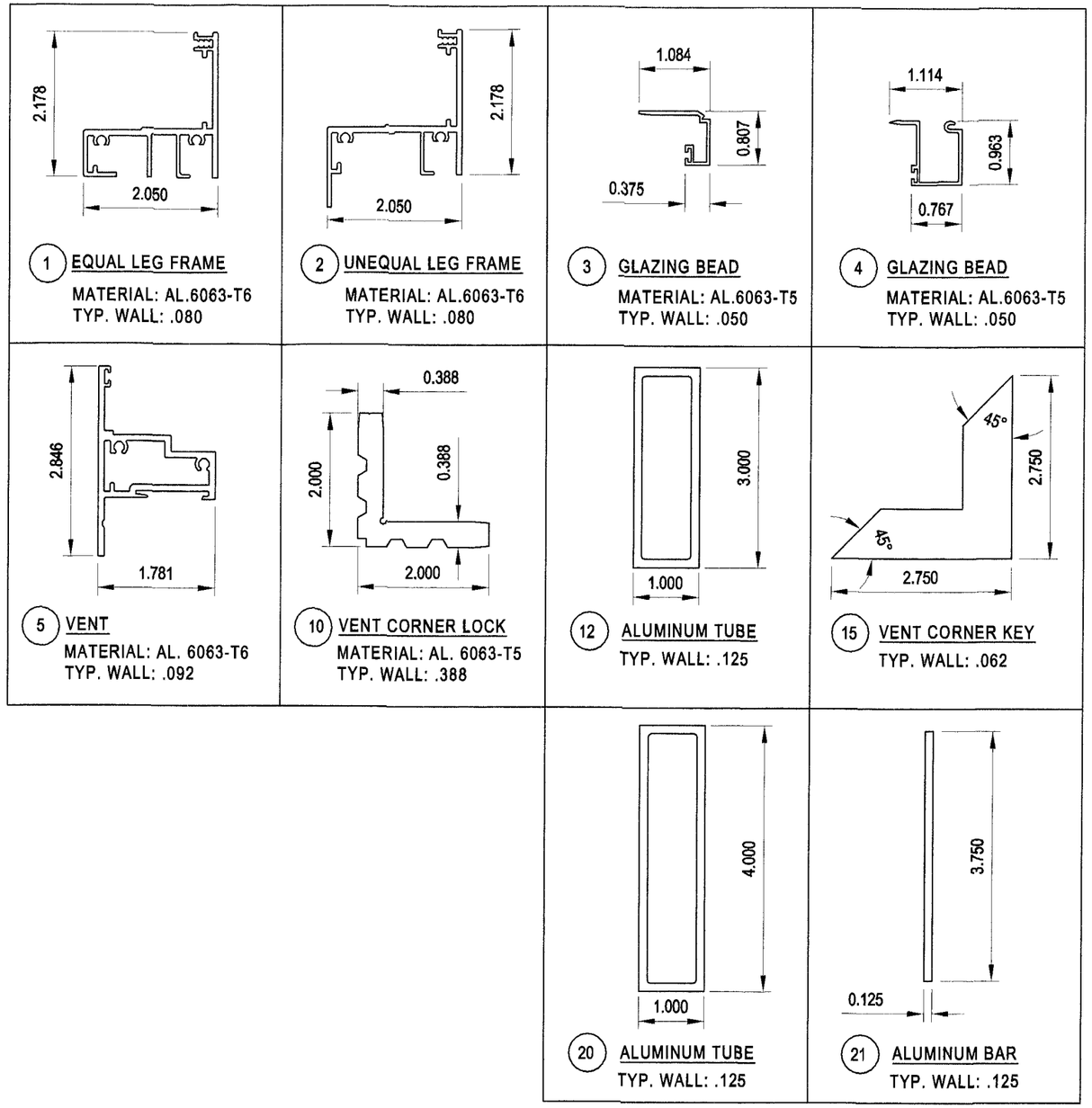

PRODUCT REVIEWED
as complying with the Florida
Building Code
Application No. 09-0122.09
Expiration Date AUG. 7, 2013
By Manuel Perez
Miami-Dade Product Control
Division

Jorge E. Valdes
Fla. PE# 67398

1/21/09

Miami Wall Systems, Inc.
701 West 25th Street
Hialeah, Florida. 33010
Phone:(305) 888-2300 Fax:(305) 888-3058

CASEMENT WINDOW SERIES 2060 (L.M.I.)

SECTIONS & EXTRUSION DETAILS

NO.	DATE	REVISION

DATE: 1/19/2009
SCALE: AS NOTED
DWG. BY: L.R.A.
CHK. BY: JV
DWG NO.: 2060-CW
SHEET 6 OF 7

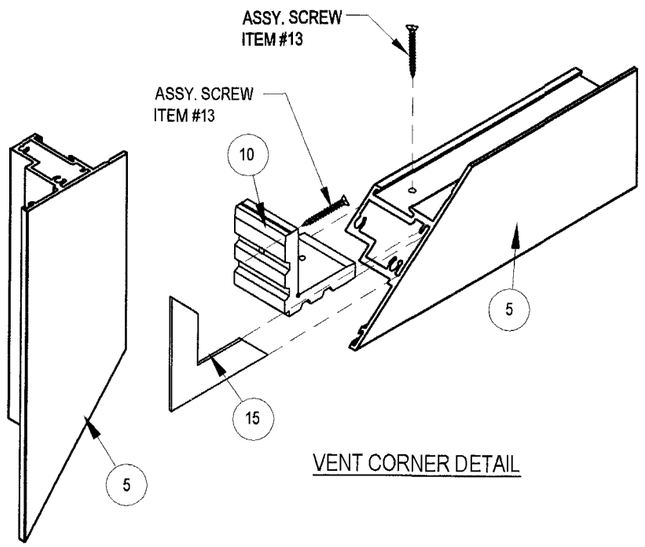

VENT CORNER DETAIL

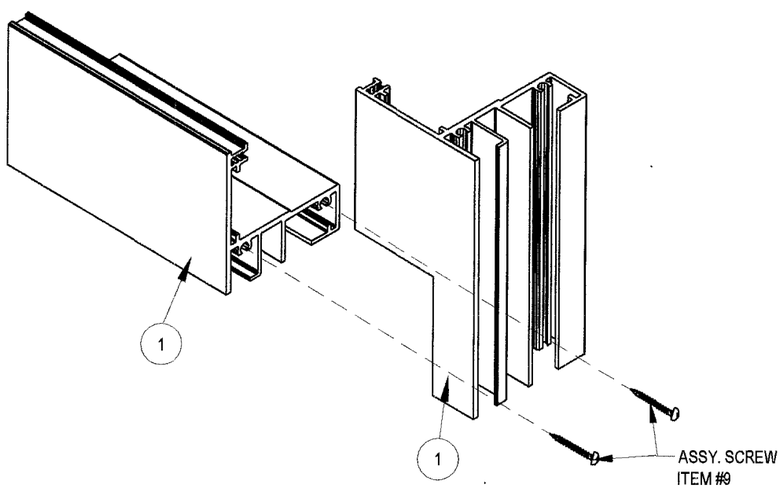

EQUAL LEG FRAME CORNER DETAIL

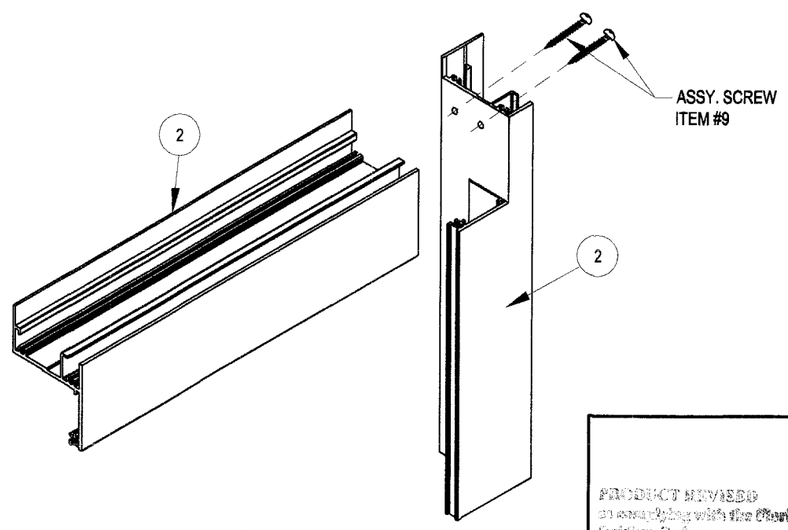

UNEQUAL LEG FRAME CORNER DETAIL

BILL OF MATERIALS

ITEM No.	PART No.	REQ'D	PART NAME	REMARKS
1	2060-001	4 PER WINDOW	EQUAL LEG FRAME	AT SILL, HEAD & JAMBS
2	2060-002	4 PER WINDOW	UNEQUAL LEG FRAME	AT SILL, HEAD & JAMBS
3	2060-004	4 PER WINDOW	GLAZING BEAD	FOR 1 $\frac{3}{32}$" INSULATED LAMINATED GLASS
4	2060-005	4 PER WINDOW	GLAZING BEAD	FOR $\frac{9}{16}$" LAMINATED GLASS
5	2060-003	4 PER WINDOW	VENT	
6		AS REQUIRED	EPDM WEDGE	AT INTERIOR SIDE OF GLASS
7		1 PER WINDOW	$\frac{9}{16}$" LAMINATED GLASS	SEE DETAILS ON SHEET #1
8	Q250T190	1 PER VENT	WEATHERSTRIPPING	AT VENT
9		2 PER CORNER	#8X1½" PH. PAN HEAD, S/S, S.M.S.	FRAME ASSEMBLY SCREWS
10	2060-006	1 PER CORNER	VENT CORNER LOCK	AT VENT
11		AS REQUIRED	#14 FLAT HEAD TEK SCREW	SEE NOTE ON SHEET 2
12		1 PER MULLION	1" X 3" X ⅛" THK. X 64" LONG ALUMINUM TUBE	SEE CHART ON SHEET 4
13		2 PER CORNER	#8 X½" FLAT HEAD, S/S, S.M.S.	VENT ASSEMBLY SCREWS
14	24.30.XX.004	1 PER VENT	MAXIM MULTI POINT LOCK ASSEMBLY	AT VENT/FRAME
15		1 PER CORNER	VENT CORNER KEY	
16	23.03.01.001	1 PER VENT	ROTO OPERATOR	AT SILL FRAME
17		1 PER VENT	(4) BARS S/S HINGE	AT VENT/FRAME
18	AP-425	AS REQUIRED	BULB VYNIL	AT FRAME
19	10390T	1 PER VENT	SNUBBER	AT MID SPAN OF VENT FRAME
20		1 PER MULLION	1" X 4" X ⅛" THK. X 64" LONG ALUMINUM TUBE	SEE CHART ON SHEET 4
21		2 PER MULLION	⅛" X 3 $\frac{3}{4}$" ALUMINUM REINFORCEMENT BARS	SEE CHART ON SHEET 4

PRODUCT REVIEWED
in accordance with the Florida
Building Code
Application No. 09-0122.09
Expiration Date AUG. 7, 2013
By Manuel Perez
Product Control
Division

Jorge E. Valdes
Fla. PE# 67398
1/21/09

Miami Wall Systems, Inc.
701 West 25th Street
Hialeah, Florida. 33010
Phone:(305) 888-2300 Fax:(305) 888-3058

CASEMENT WINDOW SERIES 2060 (L.M.I)

BILL OF MATERIALS &
CORNER DETAILS

NO.	DATE	REVISION

DATE: 1/19/2009
SCALE: AS NOTED
DWG. BY: L.R.A.
CHK. BY: JV
DWG NO.: 2060-CW
SHEET 7 OF 7