MIAMI-DADE

BUILDING CODE COMPLIANCE OFFICE (BCCO)
PRODUCT CONTROL DIVISION

MIAMI-DADE COUNTY, FLORIDA
METRO-DADE FLAGLER BUILDING
140 WEST FLAGLER STREET, SUITE 1603
MIAMI, FLORIDA 33130-1563
(305) 375-2901 FAX (305) 375-2908

NOTICE OF ACCEPTANCE (NOA)

Cornell Iron Works Inc.
100 Elmwood Avenue
Mountaintop, PA 18707

SCOPE: This NOA is being issued under the applicable rules and regulations governing the use of construction materials. The documentation submitted has been reviewed by Miami-Dade County Product Control Division and accepted by the Board of Rules and Appeals (BORA) to be used in Miami Dade County and other areas where allowed by the Authority Having Jurisdiction (AHJ).

This NOA shall not be valid after the expiration date stated below. The Miami-Dade County Product Control Division (In Miami Dade County) and/or the AHJ (in areas other than Miami Dade County) reserve the right to have this product or material tested for quality assurance purposes. If this product or material fails to perform in the accepted manner, the manufacturer will incur the expense of such testing and the AHJ may immediately revoke, modify, or suspend the use of such product or material within their jurisdiction. BORA reserves the right to revoke this acceptance, if it is determined by Miami-Dade County Product Control Division that this product or material fails to meet the requirements of the applicable building code.

This product is approved as described herein, and has been designed to comply with the High Velocity Hurricane Zone of the Florida Building Code.

DESCRIPTION: Insulated Rolling Steel Door

APPROVAL DOCUMENT: Drawing No. ES 16-29-01 titled Dade County Approved 25' 5" Insulated Rolling Steel Door, sheet 1 & 2, dated 05/23/07, with revision dated 12/03/08, prepared by Cornell Iron Works, signed and sealed on 01/20/09 by Joseph J. Dixon Jr., P.E., bearing the Miami-Dade County Product Control Approval stamp with the Notice of Acceptance number and expiration date by the Miami-Dade County Product Control Division.

MISSILE IMPACT RATING: Large and Small Missile Impact

LABELING: Each unit shall bear a permanent label with the manufacturer's name or logo, city, state and following statement: "Miami-Dade County Product Control Approved or MDCPCA", unless otherwise noted herein.

RENEWAL of this NOA shall be considered after a renewal application has been filed and there has been no change in the applicable building code negatively affecting the performance of this product.

TERMINATION of this NOA will occur after the expiration date or if there has been a revision or change in the materials, use, and/or manufacture of the product or process. Misuse of this NOA as an endorsement of any product, for sales, advertising or any other purposes shall automatically terminate this NOA. Failure to comply with any section of this NOA shall be cause for termination and removal of NOA.

ADVERTISEMENT: The NOA number preceded by the words Miami-Dade County, Florida, and followed by the expiration date may be displayed in advertising literature. If any portion of the NOA is displayed, then it shall be done in its entirety.

INSPECTION: A copy of this entire NOA shall be provided to the user by the manufacturer or its distributors and shall be available for inspection at the job site at the request of the Building Official.

This NOA revises **NOA # 07-0108.02** and consists of this page, evidence page E 1 as well as approval document mentioned above.

The submitted documentation was reviewed by **Mohammed Iqbal Shaikh, P.E.**

MIAMI-DADE COUNTY APPROVED 02/19/09

Cornell Iron Works Inc.

NOTICE OF ACCEPTANCE: EVIDENCE SUBMITTED

A. DRAWINGS

Drawing No. ES 16-28-01 titled Dade County Approved 25' 5" Insulated Rolling Steel Door, sheet 1 & 2, dated 05/23/07, with revision dated 12/03/08 prepared by Cornell Iron Work, signed and sealed on 05/27/07 by Joseph J. Dixon Jr., P.E.

B. TESTS.

1. Certified Testing Laboratories Report No. CTLA-1600W-1 pages 1 thru 7 of 7, dated 11/28/06 , signed and sealed on 12/08/06 by Ramesh Patel, P.E. for Testing Standards TAS 201, TAS 202 and TAS 203.
2. Certified Testing Laboratories Report No. CTLA-1600W and 1600W-1 for Galvanized Steel, dated 12/04/06, signed and sealed on 12/08/06 for Tensile test per ASTM E8 by Ramesh Patel, P.E.
3. Test Reports # ETC-07-1071-18738.0- Ignition Temperature per ASTM D1929 and Flame Spread/ Smoke generation per ASTM E84 Performed by ETC Lab. on 03/26/07.

C. CALCULATIONS

1. Structural calculations prepared by Joseph H. Dixon, Jr. PE, dated 01/12/09, 18 pages, signed and sealed on 01/20/09 by Joseph H. Dixon Jr, PE. .

D. MATERIAL CERTIFICATIONS

None

E. STATEMENTS

1. Code Compliance letter and no financial interest letters dated 01/20/09, signed by Joseph. H. Dixon Jr, PE.

F. QUALITY ASSURANCE

1. Miami Dade Building Code Compliance Office (BCCO).

G OTHER

1. **NOA # 07-0108.02**

Mohammed Iqbal Shaikh, P.E.
Sr. Building Code Compliance Specialist
NOA No. 09-0127.06
Expiration Date July 05, 2012
Approval Date: March 11, 2009

LTR	REVISION	DATE	BY	E.C.O.
*	ORIGINAL ISSUE	05/23/2007	R.M.	*
A	REVISED NOTES FOR 2007 BUILDING CODE	12/03/2008	R.M.	*

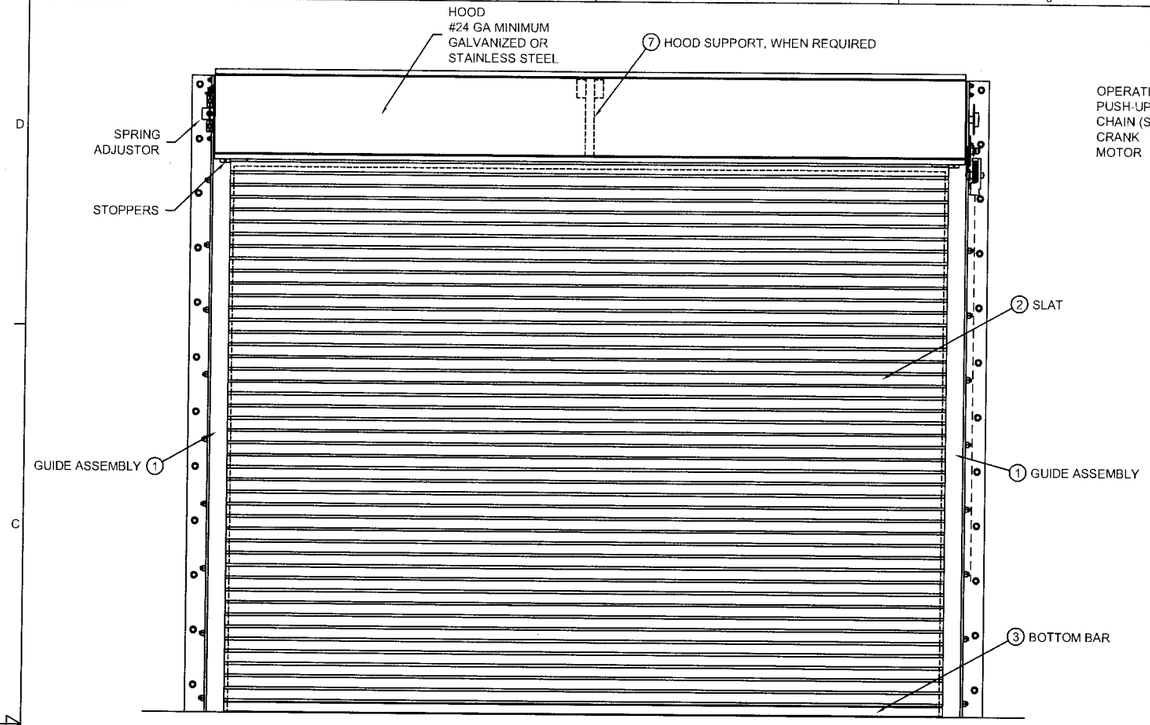

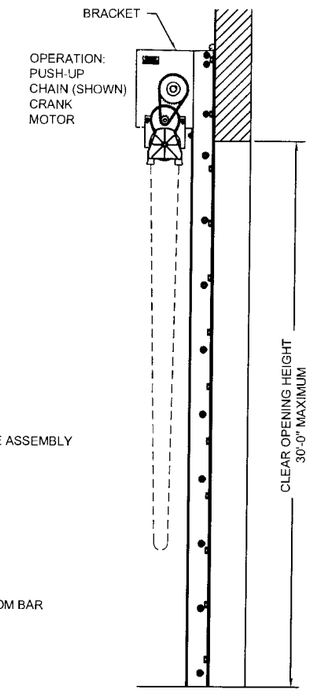

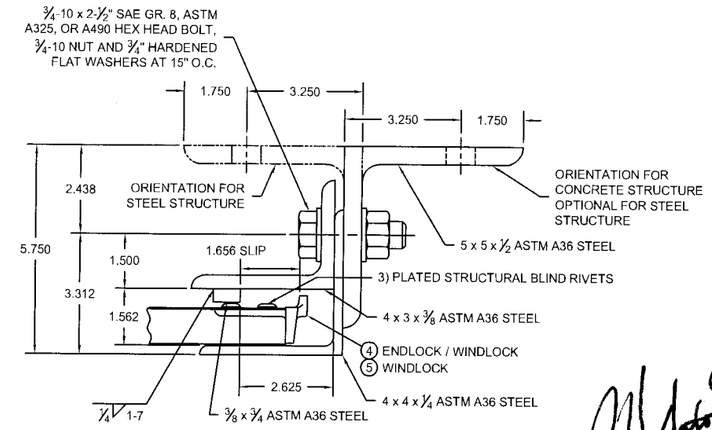

1 GUIDE ASSEMBLY DETAIL
1/2 SCALE

1/20/09
FL 7768

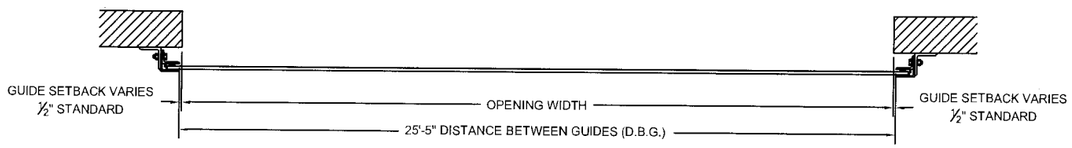

09-0127.06
07/05/12
By
Miami Dade Product Control
Division

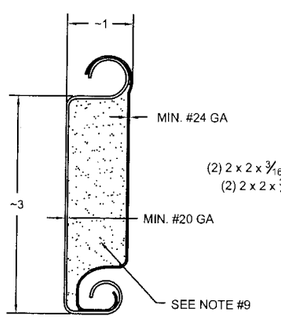

2 SLAT DETAIL
TYPICAL SECTION
ASTM A653 HSLAS TYPE B GRADE 40 G60 OR
ASTM A653 HSLAS TYPE A GRADE 40 G60 OR
ASTM A653 STRUCTURAL STEEL GRADE 40 G60
OR TYPE 304 STAINLESS STEEL (MIN. YIELD 40,000 psi)
OR TYPE 430 STAINLESS STEEL (MIN. YIELD 40,000 psi)
OR TYPE 201 STAINLESS STEEL (MIN. YIELD 40,000 psi)
FULL SCALE

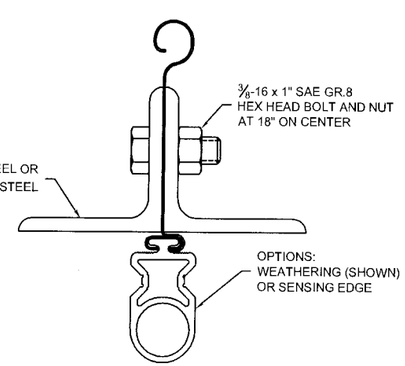

3 BOTTOM BAR DETAIL
TYPICAL SECTION
FULL SCALE

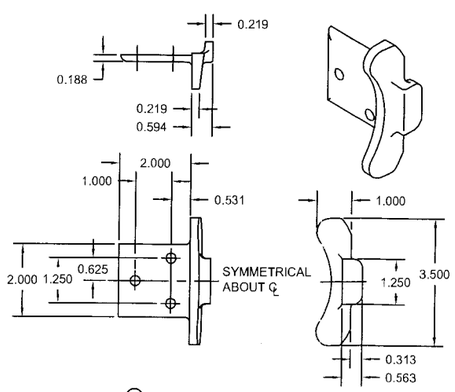

4 ENDLOCK / WINDLOCK DETAIL
CAST MALLEABLE IRON ASTM A47, GRADE 32510, OR
DUCTILE IRON PER ASTM A536 GRADE 65-45-12, GALVANIZED IN
ACCORDANCE WITH ASTM A123, GRADE 85 ZINC-COATING
1/2 SCALE

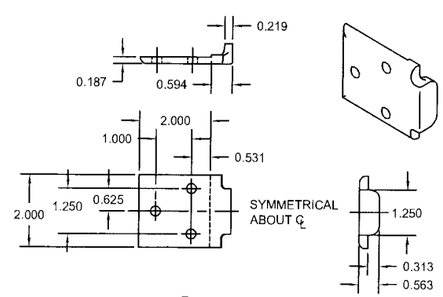

5 ENDLOCK DETAIL
CAST MALLEABLE IRON ASTM A47, GRADE 32510, OR
DUCTILE IRON PER ASTM A536 GRADE 65-45-12, GALVANIZED IN
ACCORDANCE WITH ASTM A123, GRADE 85 ZINC-COATING
1/2 SCALE

NOTES:
1. THIS ROLL-UP DOOR SYSTEM IS DESIGNED IN ACCORDANCE WITH THE FLORIDA BUILDING CODE, LATEST EDITION, AS A LARGE MISSILE IMPACT RESISTANT SYSTEM.

2. POSITIVE AND NEGATIVE DESIGN PRESSURE CALCULATIONS SHALL BE PERFORMED FOR SPECIFIC JOBS IN ACCORDANCE WITH ASCE 7 *MINIMUM DESIGN LOADS FOR BUILDINGS AND OTHER STRUCTURES*. WIND LOADS DETERMINED FOR OPENINGS SHALL BE LESS THAN OR EQUAL TO DOOR DESIGN PRESSURES NOTED BELOW.

3. THE DETAILS AND SPECIFICATIONS SHOWN HEREIN REPRESENT THE PRODUCTS TESTED FOR UNIFORM STATIC AIR PRESSURE IN CONFORMANCE WITH DADE COUNTY PROTOCOLS TAS 201, 202 AND 203.
POSITIVE DESIGN LOAD = 60 PSF
NEGATIVE DESIGN LOAD = 60 PSF

4. TESTING PERFORMED BY CERTIFIED TESTING LABORATORIES (ORLANDO, FL.) TEST REPORT No. CTLA 1600W-1.

5. SUPERIMPOSED LOADS ON THE JAMBS FROM THIS DOOR ARE DESIGNATED AS F1, F2, AND F3 HEREIN. CONTRACTORS SHALL HAVE FLORIDA REGISTERED PROFESSIONAL ENGINEER VERIFY ADEQUACY OF BUILDING STRUCTURE TO RESIST SUPERIMPOSED LOADS F1, F2, AND F3.

6. ALL WELDING SHALL BE PERFORMED BY QUALIFIED WELDERS IN ACCORDANCE WITH AWS SPECIFICATIONS, LATEST EDITION. ALL WELDING ELECTRODES SHALL CONFORM TO AWS A5.1, GRADE E-70. MINIMUM WELDING PROCESS SHALL BE ARC WELDING AWS E7014 OR MIG WELDING AWS ER70S-6.

7. ANCHOR NOTES:
A. EMBEDMENT DEPTH DOES NOT INCLUDE STUCCO FINISH.
B. ANCHORS SHALL BE INSTALLED IN ACCORDANCE WITH MANUFACTURERS SPECIFICATIONS.

8. FOAMED IN PLACE INSULATION, TESTED IN ACCORDANCE WITH ASTM E-84 AND D1929
OR
MINERAL WOOL INSULATION

9. DOOR MAY BE INSTALLED ON THE INSIDE OR OUTSIDE OF A WALL.

10. A 33% INCREASE IN ALLOWABLE STRESS HAS NOT BEEN USED IN THE DESIGN OF THIS PRODUCT.

CORNELL
100 ELMWOOD AVENUE
CRESTWOOD INDUSTRIAL PARK
MOUNTAINTOP, PA 18707

TITLE
DADE COUNTY APPROVED
25'-5" WIDE 60 PSF INSULATED
ROLLING STEEL DOOR

SIZE	DRAWN	DWG NO	REV
D	R. MAGGIO	ES16-29-01	A
SCALE 1:16 & AS NOTED		SHEET 1 OF 2	

LTR	REVISION	DATE	BY	E.C.O.
*	ORIGINAL ISSUE	05/23/2007	R.M.	****
A	REVISED FOR 2007 FLORIDA BUILDING CODE	12/03/2008	R.M.	****

CONCRETE FASTENER SPACING		
CONCRETE STRENGTH (psi)	MAXIMUM FASTENER SPACING (in.)	
	HILTI	SIMPSON
3000	7 1/2	8
4000	11	9 1/2

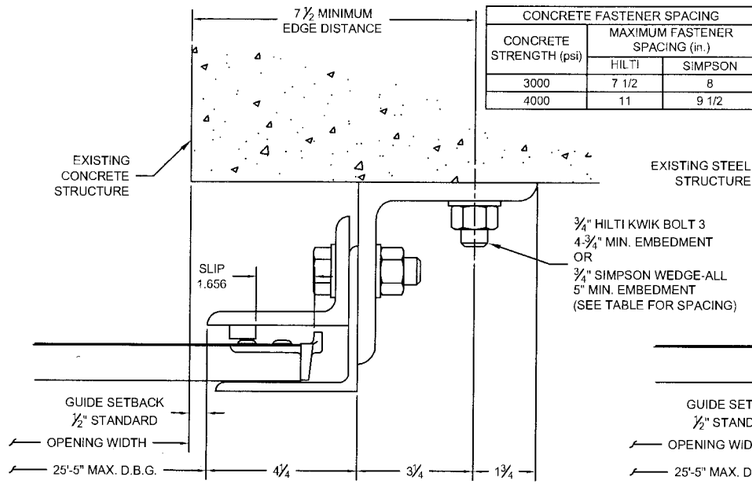

GUIDE ASSEMBLY
CONCRETE STRUCTURE

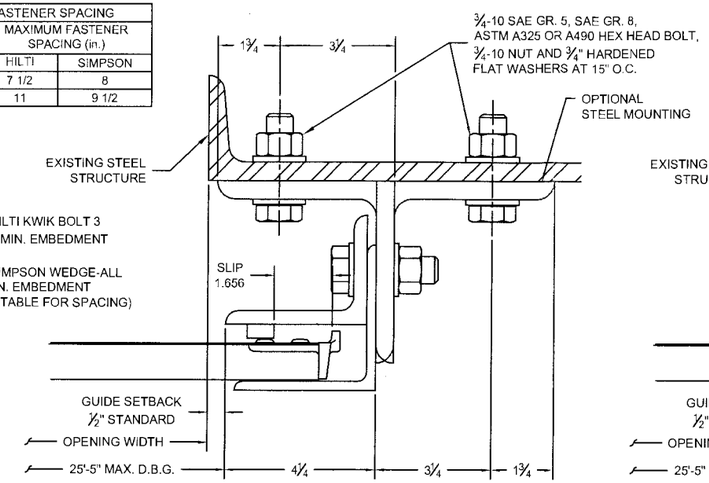

GUIDE ASSEMBLY
STEEL STRUCTURE

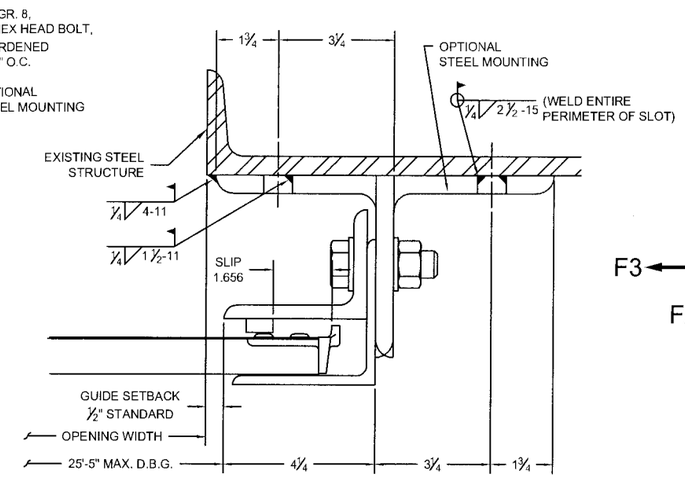

GUIDE ASSEMBLY
STEEL STRUCTURE

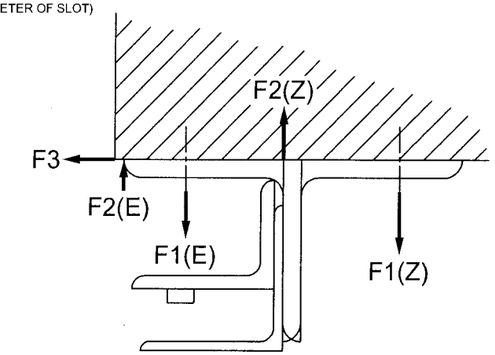

UNREDUCED WIND FORCES ON BUILDING STRUCTURE

BUILDING DESIGNER NOTE:
STRUCTURE MUST BE DESIGNED TO SUPPORT F1, F2, AND F3 FORCES (LBS./FT. OF OPENING HEIGHT) AT EACH JAMB.

FORCES ON STRUCTURE (LBS / FOOT OF HEIGHT)											
Z-GUIDE						E-GUIDE					
POSITIVE			NEGATIVE			POSITIVE			NEGATIVE		
F1	F2	F3	F1	F2	F3	F1	F2	F3	F1	F2	F3
2294	1532	2524	4199	4962	2524	6222	5459	2524	5838	6601	2524

PRODUCT REVISED
as complying with the Florida
Building Code
Acceptance No 09-0127.06
Expiration Date 07/05/12
By
Miami Dade Product Control
Division

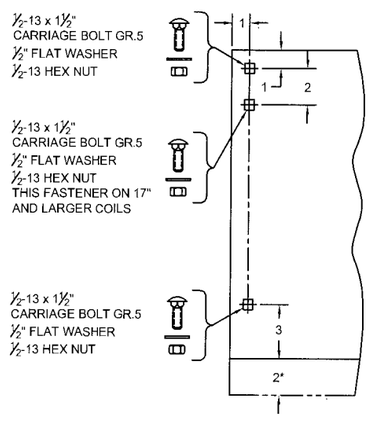

6 BRACKET MOUNTING DETAIL
0.172 MIN. THICKNESS
* 2" EXTENSION WHEN 8" AND LARGER SHAFT ASSEMBLY IS SUPPLIED
SCALE: FULL

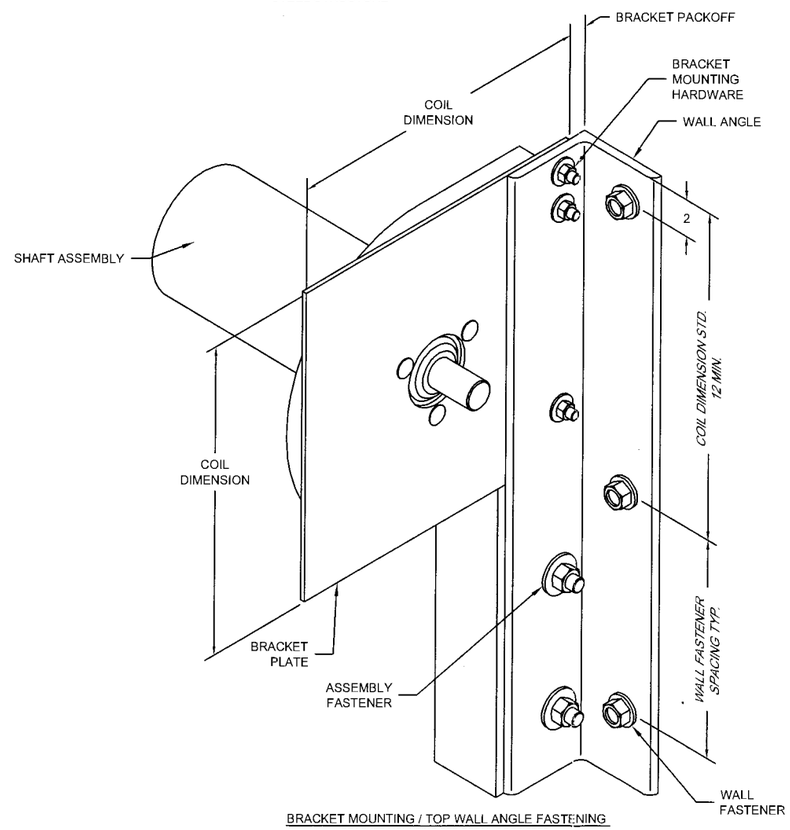

BRACKET MOUNTING / TOP WALL ANGLE FASTENING
BRACKET MOUNTING PER DETAIL 6 DEPICTED.
OTHER BRACKET MOUNTINGS ARE AVAILABLE
SCALE: NTS

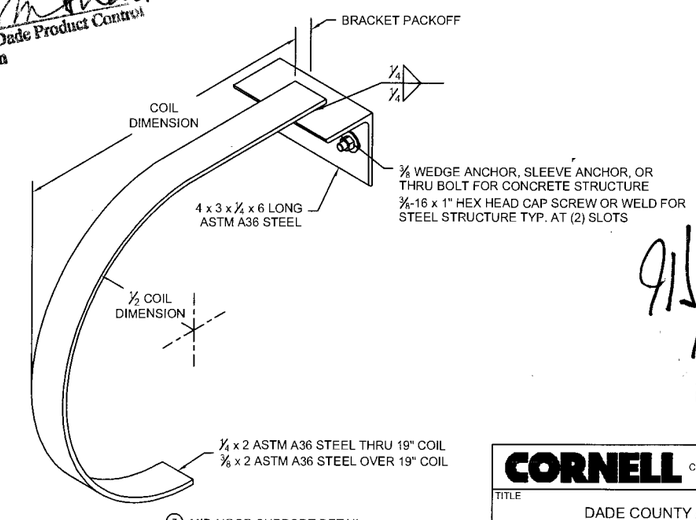

7 MID-HOOD SUPPORT DETAIL
(WHEN REQUIRED)
SCALE: NTS

1/20/09
FL 7768

CORNELL
100 ELMWOOD AVENUE
CRESTWOOD INDUSTRIAL PARK
MOUNTAINTOP, PA 18707

TITLE
DADE COUNTY APPROVED
25'-5" WIDE 60 PSF INSULATED
ROLLING STEEL DOOR

SIZE	DRAWN	DWG NO	REV
D	R. MAGGIO	ES16-29-02	A

SCALE 1:2 & AS NOTED
SHEET 2 OF 2