MIAMI-DADE COUNTY
BUILDING CODE COMPLIANCE OFFICE (BCCO)
PRODUCT CONTROL DIVISION

MIAMI-DADE COUNTY, FLORIDA
METRO-DADE FLAGLER BUILDING
140 WEST FLAGLER STREET, SUITE 1603
MIAMI, FLORIDA 33130-1563
(305) 375-2901 FAX (305) 372-6339
www.miamidade.gov/buildingcode

NOTICE OF ACCEPTANCE (NOA)

CGI Windows & Doors
10100 NW 25 St.
Miami, FL 33172

SCOPE:
This NOA is being issued under the applicable rules and regulations governing the use of construction materials. The documentation submitted has been reviewed by Miami-Dade County Product Control Division and accepted by the Board of Rules and Appeals (BORA) to be used in Miami Dade County and other areas where allowed by the Authority Having Jurisdiction (AHJ).
This NOA shall not be valid after the expiration date stated below. The Miami-Dade County Product Control Division (In Miami Dade County) and/or the AHJ (in areas other than Miami Dade County) reserve the right to have this product or material tested for quality assurance purposes. If this product or material fails to perform in the accepted manner, the manufacturer will incur the expense of such testing and the AHJ may immediately revoke, modify, or suspend the use of such product or material within their jurisdiction. BORA reserves the right to revoke this acceptance, if it is determined by Miami-Dade County Product Control Division that this product or material fails to meet the requirements of the applicable building code. This product is approved as described herein, and has been designed to comply with the Florida Building Code, including the High Velocity Hurricane Zone.

DESCRIPTION: Series "410" Aluminum Fixed Window – S.M.I.

APPROVAL DOCUMENT: Drawing No. **W09-04**, titled "Series 410 Fixed Window (S.M.I.)", sheets 1 through 8 of 8, dated 01/14/09with revision A dated 04/06/09, prepared by Al-Farooq Corporation, signed and sealed by Arshad Viqar, P.E., bearing the Miami-Dade County Product Control Approval stamp with the Notice of Acceptance number and approval date by the Miami-Dade County Product Control Division.

MISSILE IMPACT RATING: Small Missile Impact Resistant

LABELING: Each unit shall bear a permanent label with the manufacturer's name or logo, city, state and following statement: "Miami-Dade County Product Control Approved", unless otherwise noted herein.

RENEWAL of this NOA shall be considered after a renewal application has been filed and there has been no change in the applicable building code negatively affecting the performance of this product.

TERMINATION of this NOA will occur after the expiration date or if there has been a revision or change in the materials, use, and/or manufacture of the product or process. Misuse of this NOA as an endorsement of any product, for sales, advertising or any other purposes shall automatically terminate this NOA. Failure to comply with any section of this NOA shall be cause for termination and removal of NOA.

ADVERTISEMENT: The NOA number preceded by the words Miami-Dade County, Florida, and followed by the expiration date may be displayed in advertising literature. If any portion of the NOA is displayed, then it shall be done in its entirety.

INSPECTION: A copy of this entire NOA shall be provided to the user by the manufacturer or its distributors and shall be available for inspection at the job site at the request of the Building Official.
This NOA consists of this page 1 and evidence pages E-1 and E-2, as well as approval document mentioned above.
The submitted documentation was reviewed by **Manuel Perez, P.E.**

MIAMI-DADE COUNTY APPROVED

NOTICE OF ACCEPTANCE: EVIDENCE SUBMITTED

A. DRAWINGS

1. Manufacturer's die drawings and sections.
2. Drawing No **W09-04**, Sheets 1 through 8 of 8, titled "Series 410 Fixed Window (S.M.I.)", dated 01/14/09 with revision A dated 04/06/09, prepared by Al-Farooq Corporation, signed and sealed by Arshad Viqar, P.E.

B. TESTS

1. Test reports on: 1) Air Infiltration Test, per FBC, TAS 202-94
   2) Uniform Static Air Pressure Test, Loading per FBC TAS 202-94
   3) Water Resistance Test, per FBC, TAS 202-94
   4) Large Missile Impact Test per FBC, TAS 201-94
   5) Small Missile Impact Test per FBC, TAS 201-94
   6) Cyclic Wind Pressure Loading per FBC, TAS 203-94

   along with marked-up drawings and installation diagram of a series 410 aluminum fixed window, prepared by Hurricane Test Laboratory, LLC, Test Report No. **HTL-0080-0504-08**, dated 11/13/08, signed and sealed by Vinu J. Abraham, P.E.

C. CALCULATIONS

1. Anchor verification calculations and structural analysis, complying with FBC-2007, prepared by Al-Farooq Corporation, dated 01/15/09, signed and sealed by Humayoun Farooq, P.E.
   Complies with ASTM E1300-02/04

D. QUALITY ASSURANCE

1. Miami Dade Building Code Compliance Office (BCCO).

E. MATERIAL CERTIFICATIONS

1. Notice of Acceptance No. **05-1208.02** issued to **E.I. DuPont DeNemours & Co.**, Inc. for their "**DuPont Butacite PVB Interlayer**" dated 01/05/06, expiring on 12/11/10.
2. Notice of Acceptance No. **06-0216.06** issued to **Solutia, Inc.** for their "**Saflex IIIG Clear or colored Interlayer**" dated 05/04/06, expiring on 05/21/11.

Manuel Perez, P.E.
Product Control Examiner
NOA No. 09-0127.16
Expiration Date: June 3, 2014
Approval Date: June 3, 2009

NOTICE OF ACCEPTANCE: EVIDENCE SUBMITTED

F. STATEMENTS

1. Statement letter of conformance, dated January 15, 2009, signed and sealed by Humayoun Farooq, P.E.
2. Statement letter of no financial interest, dated January 15, 2009, signed and sealed by Humayoun Farooq, P.E.
3. Testing Proposal # **07-3069 (Revised)** dated 01/18/09 issued by Miami-Dade BCCO, Product Control Division, signed by Manuel Perez, P.E.
4. Laboratory compliance letter for Test Report No. **HTL- 0080-0504-08**, issued by Hurricane Test Laboratory, Inc., dated 11/13/08, signed and sealed by Vinu J. Abraham, P.E.
5. Laboratory compliance letter for Test Report No. **HTL- 0080-0504-08** (Specimen 15), issued by Hurricane Test Laboratory, Inc., dated 12/18/08, signed and sealed by Vinu J. Abraham, P.E.

G. OTHER

1. None.

Manuel Perez, P.E.
Product Control Examiner
NOA No. 09-0127.16
Expiration Date: June 3, 2014
Approval Date: June 3, 2009

AVAILABLE FRAME TYPES

Same frame used on all four sides

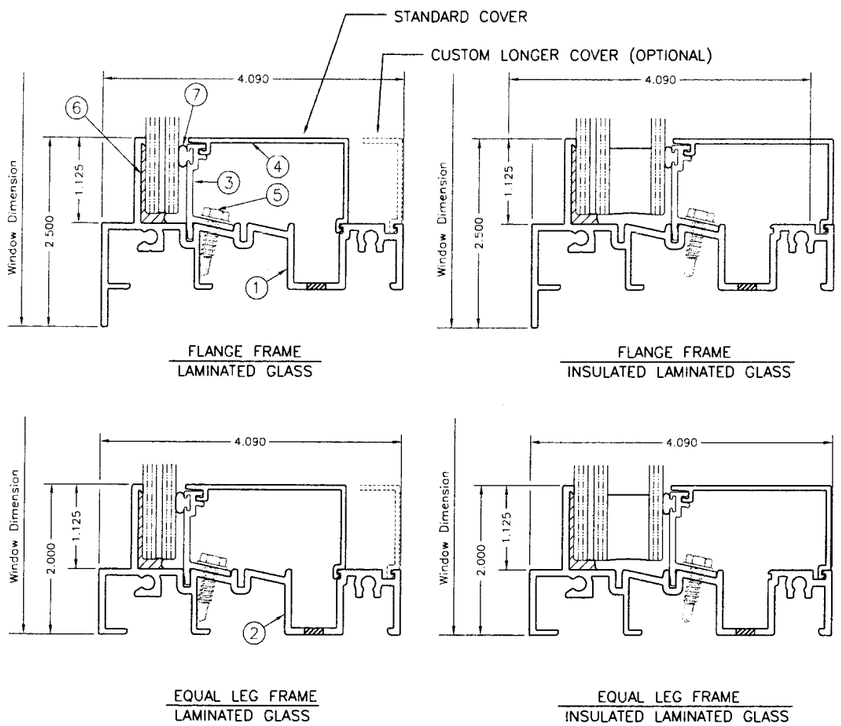

FLANGE FRAME / LAMINATED GLASS

FLANGE FRAME / INSULATED LAMINATED GLASS

EQUAL LEG FRAME / LAMINATED GLASS

EQUAL LEG FRAME / INSULATED LAMINATED GLASS

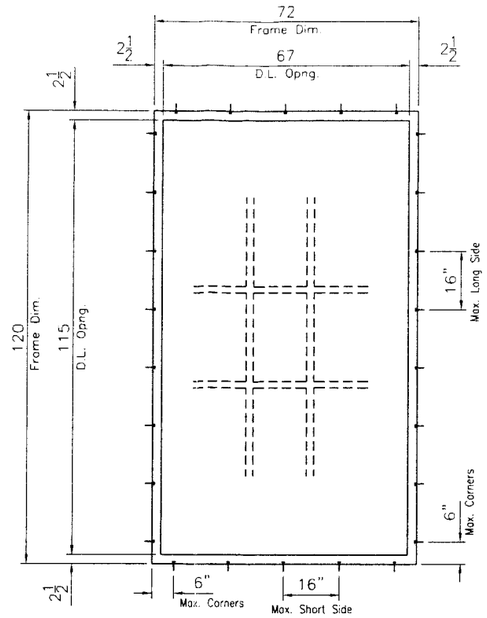

TYPICAL ELEVATION / FLANGE FRAME

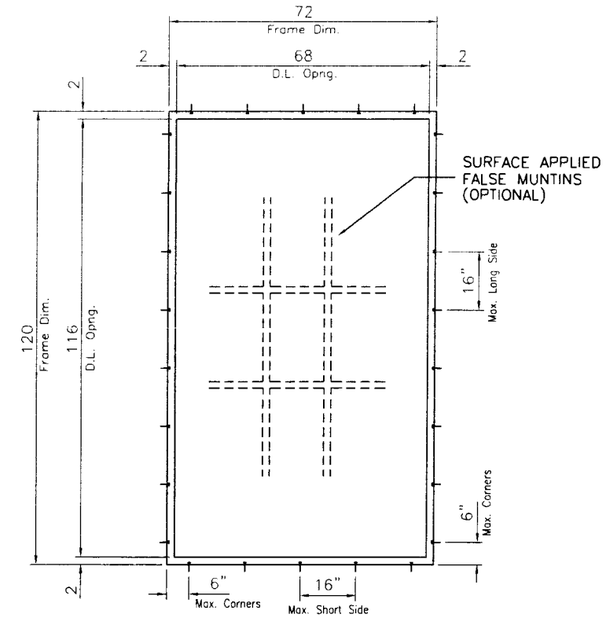

TYPICAL ELEVATION / EQUAL LEG FRAME

SERIES 410 FIXED WINDOWS

APPROVAL APPLIES TO SINGLE UNITS OR SIDE BY SIDE COMBINATIONS OF FIX./FIX. OR FIXED WITH OTHER MIAMI-DADE COUNTY APPROVED WINDOWS USING MIAMI-DADE COUNTY APPROVED MULLIONS IN BETWEEN.
LOWER DESIGN PRESSURE FROM WINDOWS OR MULLION APPROVAL WILL APPLY TO ENTIRE SYSTEM.

THIS PRODUCT HAS BEEN DESIGNED AND TESTED TO COMPLY WITH THE REQUIREMENTS OF THE FLORIDA BUILDING CODE 2004/2007 EDITION INCLUDING HIGH VELOCITY HURRICANE ZONE (HVHZ).

WOOD BUCKS BY OTHERS, MUST BE ANCHORED PROPERLY TO TRANSFER LOADS TO THE STRUCTURE.

ANCHORS SHALL BE AS LISTED, SPACED AS SHOWN ON DETAILS, ANCHORS EMBEDMENT TO BASE MATERIAL SHALL BE BEYOND WALL DRESSING OR STUCCO.

ANCHORING OR LOADING CONDITIONS NOT SHOWN IN THESE DETAILS ARE NOT PART OF THIS APPROVAL.

A LOAD DURATION INCREASE IS USED IN DESIGN OF ANCHORS INTO WOOD ONLY.

MATERIALS INCLUDING BUT NOT LIMITED TO STEEL/METAL SCREWS, THAT COME INTO CONTACT WITH OTHER DISSIMILAR MATERIALS SHALL MEET THE REQUIREMENTS OF 2004/2007 FLORIDA BLDG. CODE SECTION 2003.8.4.

INSTRUCTIONS FOR USING CAPACITY CHARTS:

STEP 1 DETERMINE THE REQUIRED DESIGN PRESSURES FOR A GIVEN WINDOW OPENING.

STEP 2 DETERMINE THE CAPACITY OF THE WINDOW SIZE/CONFIGURATION/GLASS TYPE FROM CHARTS ON SHEETS 2.
FOR INSTALLATION ANCHOR TYPES SEE SHEET 3.

STEP 3 IF ALUMINUM BUCKS ARE USED, VERIFY THE BUCK INSTALLATION CAPACITY FROM SHEET 7.

STEP 4 FOR UNCLIPPED MULLED WINDOWS DETERMINE MULLION CAPACITY FOR 1X4 AND 1X6 TUBES FROM CHARTS ON SHEETS 4 & 6.

STEP 5 FOR MULLION ANCHOR CAPACITY SEE CHART ON SHEET 5.

THE LOWEST SELECTED VALUE APPLY TO THE INSTALLATION AND MUST EQUAL OR EXCEED THE REQUIRED DESIGN PRESSURES OBTAINED FROM STEP 1.

THESE WINDOWS ARE RATED FOR SMALL MISSILE IMPACT.
MIAMI-DADE COUNTY APPROVED IMPACT RESISTANT SHUTTERS REQUIRED FOR INSTALLATIONS UP TO 30 FT. OF GRADE.
SHUTTERS NOT REQD. FOR INSTALLATIONS ABOVE 30 FT. OF GRADE.

Engr: ARSHAD VIQAR
CIVIL
FLA. PE # 38863
C.A.N. 3538

APR 24 2009

Approved as complying with the Florida Building Code
Date JUNE 3, 2009
NOA# 09-0127.16
Miami Dade Product Control Division
By Marine Perez

AL-FAROOQ CORPORATION
ENGINEERS & PRODUCT DEVELOPMENT
1235 S.W. 87 AVE
MIAMI, FLORIDA 33174
TEL. (305) 264-8100 FAX. (305) 262-6978
COMP-ANL\W09-04CGI

SERIES 410 FIXED WINDOW (S.M.I.)

CGI WINDOWS & DOORS
10100 N.W. 25TH STREET
MIAMI, FL. 33172
TEL. (305) 593-6590 FAX. (305) 593-6592

revisions:

no	date	by	description
A	04.06.09		NO CHANGE THIS SHEET

date: 01-14-09
scale: -
dr. by: -
chk. by:

drawing no. W09-04

DESIGN LOAD CAPACITY - PSF

DIM. 1 INCHES	DIM. 2 INCHES	GLASS TYPE 1 ANCHOR OPTION 1 EXT.(+)	GLASS TYPE 1 ANCHOR OPTION 1 INT.(-)	GLASS TYPE 1 ANCHOR OPTION 2 EXT.(+)	GLASS TYPE 1 ANCHOR OPTION 2 INT.(-)	GLASS TYPE 1A ANCHOR OPTION 1 EXT.(+)	GLASS TYPE 1A ANCHOR OPTION 1 INT.(-)	GLASS TYPE 1A ANCHOR OPTION 2 EXT.(+)	GLASS TYPE 1A ANCHOR OPTION 2 INT.(-)
30		133.0	210.0	133.0	210.0	133.0	210.0	133.0	210.0
36		133.0	210.0	133.0	210.0	133.0	210.0	133.0	210.0
42		133.0	203.8	133.0	210.0	133.0	203.8	133.0	210.0
48		133.0	208.0	133.0	210.0	133.0	208.0	133.0	210.0
51		133.0	184.9	133.0	200.7	133.0	184.9	133.0	200.7
54	48	133.0	166.4	133.0	191.3	133.0	166.4	133.0	191.3
57		133.0	151.3	133.0	183.5	133.0	151.3	133.0	183.5
60		133.0	138.7	133.0	177.1	133.0	138.7	133.0	177.1
63		133.0	160.0	133.0	171.6	133.0	160.0	133.0	171.6
66		130.6	148.6	130.6	167.0	130.6	148.6	130.6	167.0
69		127.5	138.7	127.5	162.9	127.5	138.7	127.5	162.9
72		124.7	130.0	124.7	159.4	124.7	130.0	124.7	159.4
30		133.0	204.8	133.0	210.0	133.0	204.8	133.0	210.0
36		133.0	184.9	133.0	210.0	133.0	184.9	133.0	210.0
42		133.0	172.9	133.0	198.7	133.0	172.9	133.0	198.7
48		133.0	166.4	133.0	191.3	133.0	166.4	133.0	191.3
51		133.0	164.9	133.0	189.5	133.0	164.9	133.0	189.5
54	54	133.0	164.3	133.0	188.9	133.0	164.3	133.0	188.9
57		133.0	147.9	133.0	179.4	133.0	147.9	133.0	179.4
60		133.0	134.5	133.0	171.7	133.0	134.5	133.0	171.7
63		129.3	154.1	129.3	165.3	129.3	154.1	129.3	165.3
66		125.0	142.2	125.0	159.8	125.0	142.2	125.0	159.8
69		118.9	118.9	118.9	118.9	118.9	118.9	118.9	118.9
72		118.9	118.9	118.9	118.9	118.9	118.9	118.9	118.9
30		133.0	177.5	133.0	210.0	133.0	177.5	133.0	210.0
36		133.0	158.5	133.0	202.4	133.0	158.5	133.0	202.4
42		133.0	146.3	133.0	186.8	133.0	146.3	133.0	186.8
48		133.0	138.7	133.0	177.1	133.0	138.7	133.0	177.1
51		133.0	136.2	133.0	173.9	133.0	136.2	133.0	173.9
54	60	133.0	134.5	133.0	171.7	133.0	134.5	133.0	171.7
57		133.0	133.5	133.0	170.4	133.0	133.5	133.0	170.4
60		133.0	133.1	133.0	170.0	133.0	133.1	133.0	170.0
63		107.0	107.0	107.0	107.0	107.0	107.0	107.0	107.0
66		107.0	107.0	107.0	107.0	107.0	107.0	107.0	107.0
69		107.0	107.0	107.0	107.0	107.0	107.0	107.0	107.0
72		107.0	107.0	107.0	107.0	107.0	107.0	107.0	107.0
30		133.0	195.8	133.0	210.0	133.0	195.8	133.0	210.0
36		133.0	173.3	133.0	194.8	133.0	173.3	133.0	194.8
42		133.0	158.5	133.0	178.1	133.0	158.5	133.0	178.1
48		130.6	148.6	130.6	167.0	130.6	148.6	130.6	167.0
51		127.5	145.0	127.5	163.0	127.5	145.0	127.5	163.0
54	66	125.0	142.2	125.0	159.8	125.0	142.2	125.0	159.8
57		112.6	112.6	112.6	112.6	112.6	112.6	112.6	112.6
60		107.0	107.0	107.0	107.0	107.0	107.0	107.0	107.0
63		101.9	101.9	101.9	101.9	101.9	101.9	101.9	101.9
66		97.3	97.3	97.3	97.3	97.3	97.3	97.3	97.3
69		97.3	97.3	97.3	97.3	97.3	97.3	97.3	97.3
72		97.3	97.3	97.3	97.3	97.3	97.3	97.3	97.3
30		133.0	175.2	133.0	210.0	133.0	175.2	133.0	210.0
36		133.0	154.1	133.0	188.9	133.0	154.1	133.0	188.9
42		133.0	139.8	133.0	171.4	133.0	139.8	133.0	171.4
48		124.7	130.0	124.7	159.4	124.7	130.0	124.7	159.4
51		120.0	125.9	120.0	125.9	120.0	125.9	120.0	125.9
54	72	118.9	118.9	118.9	118.9	118.9	118.9	118.9	118.9
57		112.6	112.6	112.6	112.6	112.6	112.6	112.6	112.6
60		107.0	107.0	107.0	107.0	107.0	107.0	107.0	107.0
63		101.9	101.9	101.9	101.9	101.9	101.9	101.9	101.9
66		97.3	97.3	97.3	97.3	97.3	97.3	97.3	97.3
69		93.0	93.0	93.0	93.0	93.0	93.0	93.0	93.0
72		89.2	89.2	89.2	89.2	89.2	89.2	89.2	89.2

DESIGN LOAD CAPACITY - PSF

DIM. 1 INCHES	DIM. 2 INCHES	GLASS TYPE 1 ANCHOR OPTION 1 EXT.(+)	GLASS TYPE 1 ANCHOR OPTION 1 INT.(-)	GLASS TYPE 1 ANCHOR OPTION 2 EXT.(+)	GLASS TYPE 1 ANCHOR OPTION 2 INT.(-)	GLASS TYPE 1A ANCHOR OPTION 1 EXT.(+)	GLASS TYPE 1A ANCHOR OPTION 1 INT.(-)	GLASS TYPE 1A ANCHOR OPTION 2 EXT.(+)	GLASS TYPE 1A ANCHOR OPTION 2 INT.(-)
30		133.0	190.2	133.0	210.0	133.0	190.2	133.0	210.0
36		133.0	166.4	133.0	184.2	133.0	166.4	133.0	184.2
42		130.0	150.1	130.0	166.2	130.0	150.1	130.0	166.2
48		120.0	132.8	120.0	132.8	120.0	132.8	120.0	132.8
51		120.0	125.9	120.0	125.9	120.0	125.9	120.0	125.9
54	78	118.9	118.9	118.9	118.9	118.9	118.9	118.9	118.9
57		112.6	112.6	112.6	112.6	112.6	112.6	112.6	112.6
60		107.0	107.0	107.0	107.0	107.0	107.0	107.0	107.0
63		101.9	101.9	101.9	101.9	101.9	101.9	101.9	101.9
66		97.3	97.3	97.3	97.3	97.3	97.3	97.3	97.3
69		93.0	93.0	93.0	93.0	93.0	93.0	93.0	93.0
72		89.2	89.2	89.2	89.2	89.2	89.2	89.2	89.2
30		133.0	173.6	133.0	207.0	133.0	173.6	133.0	207.0
36		133.0	151.3	133.0	180.3	133.0	151.3	133.0	180.3
42		126.7	135.8	126.7	161.9	126.7	135.8	126.7	161.9
48		120.0	124.8	120.0	128.7	120.0	124.8	120.0	128.7
51		120.0	120.5	120.0	124.3	120.0	120.5	120.0	124.3
54	84	116.8	116.8	118.9	118.9	116.8	116.8	118.9	118.9
57		112.6	112.6	112.6	112.6	112.6	112.6	112.6	112.6
60		107.0	107.0	107.0	107.0	107.0	107.0	107.0	107.0
63		101.9	101.9	101.9	101.9	101.9	101.9	101.9	101.9
66		97.3	97.3	97.3	97.3	97.3	97.3	97.3	97.3
69		78.3	78.3	78.3	78.3	78.3	78.3	78.3	78.3
72		75.0	75.0	75.0	75.0	75.0	75.0	75.0	75.0
30		133.0	159.7	133.0	204.0	133.0	159.7	133.0	204.0
36		133.0	138.7	133.0	177.1	133.0	138.7	133.0	177.1
42		120.0	124.0	120.0	137.1	120.0	124.0	120.0	137.1
48		113.5	113.5	120.0	125.4	113.5	113.5	120.0	125.4
51		109.3	109.3	120.0	120.8	109.3	109.3	120.0	120.8
54	90	105.7	105.7	116.8	116.8	105.7	105.7	116.8	116.8
57		102.5	102.5	112.6	112.6	102.5	102.5	112.6	112.6
60		99.8	99.8	107.0	107.0	99.8	99.8	107.0	107.0
63		97.5	97.5	101.9	101.9	97.5	97.5	101.9	101.9
66		81.8	81.8	81.8	81.8	81.8	81.8	81.8	81.8
69		78.3	78.3	78.3	78.3	78.3	78.3	78.3	78.3
72		75.0	75.0	75.0	75.0	75.0	75.0	75.0	75.0
30		133.0	172.6	133.0	201.5	133.0	172.6	133.0	201.5
36		133.0	149.3	133.0	174.4	133.0	149.3	133.0	174.4
42		120.0	133.1	120.0	134.5	120.0	133.1	120.0	134.5
48		120.0	121.3	120.0	122.6	120.0	121.3	120.0	122.6
51		116.6	116.6	117.8	117.8	116.6	116.6	117.8	117.8
54	96	112.5	112.5	113.7	113.7	112.5	112.5	113.7	113.7
57		109.0	109.0	110.1	110.1	109.0	109.0	110.1	110.1
60		105.9	105.9	107.0	107.0	105.9	105.9	107.0	107.0
63		85.7	85.7	85.7	85.7	85.7	85.7	85.7	85.7
66		81.8	81.8	81.8	81.8	81.8	81.8	81.8	81.8
69		78.3	78.3	78.3	78.3	78.3	78.3	78.3	78.3
72		75.0	75.0	75.0	75.0	75.0	75.0	75.0	75.0
30		133.0	160.7	133.0	199.3	133.0	160.7	133.0	199.3
36		120.0	138.7	120.0	148.9	120.0	138.7	120.0	148.9
42		120.0	123.3	120.0	132.3	120.0	123.3	120.0	132.3
48		112.0	112.0	120.0	120.2	112.0	112.0	120.0	120.2
51		107.5	107.5	115.4	115.4	107.5	107.5	115.4	115.4
54	102	103.5	103.5	111.2	111.2	103.5	103.5	111.2	111.2
57		92.0	92.0	92.0	92.0	92.0	92.0	92.0	92.0
60		89.3	89.3	89.3	89.3	89.3	89.3	89.3	89.3
63		85.7	85.7	85.7	85.7	85.7	85.7	85.7	85.7
66		81.8	81.8	81.8	81.8	81.8	81.8	81.8	81.8
69		78.3	78.3	78.3	78.3	78.3	78.3	78.3	78.3
72		75.0	75.0	75.0	75.0	75.0	75.0	75.0	75.0

DESIGN LOAD CAPACITY - PSF

DIM. 1 INCHES	DIM. 2 INCHES	GLASS TYPE 1 ANCHOR OPTION 1 EXT.(+)	GLASS TYPE 1 ANCHOR OPTION 1 INT.(-)	GLASS TYPE 1 ANCHOR OPTION 2 EXT.(+)	GLASS TYPE 1 ANCHOR OPTION 2 INT.(-)	GLASS TYPE 1A ANCHOR OPTION 1 EXT.(+)	GLASS TYPE 1A ANCHOR OPTION 1 INT.(-)	GLASS TYPE 1A ANCHOR OPTION 2 EXT.(+)	GLASS TYPE 1A ANCHOR OPTION 2 INT.(-)
30		133.0	150.3	133.0	197.4	133.0	150.3	133.0	197.4
36		120.0	129.4	120.0	147.1	120.0	129.4	120.0	147.1
42		114.8	114.8	120.0	130.5	114.8	114.8	120.0	130.5
48		104.0	104.0	118.2	118.2	104.0	104.0	118.2	118.2
51		99.7	99.7	113.3	113.3	99.7	99.7	113.3	113.3
54	108	93.3	93.3	93.3	93.3	93.3	93.3	93.3	93.3
57		90.1	90.1	90.1	90.1	90.1	90.1	90.1	90.1
60		87.2	87.2	87.2	87.2	87.2	87.2	87.2	87.2
63		84.7	84.7	84.7	84.7	84.7	84.7	84.7	84.7
66		81.8	81.8	81.8	81.8	81.8	81.8	81.8	81.8
69		78.3	78.3	78.3	78.3	78.3	78.3	78.3	78.3
72		75.0	75.0	75.0	75.0	75.0	75.0	75.0	75.0
30		133.0	161.4	133.0	195.8	133.0	161.4	133.0	195.8
36		120.0	138.7	120.0	145.6	120.0	138.7	120.0	145.6
42		120.0	122.7	120.0	128.8	120.0	122.7	120.0	128.8
48		110.9	110.9	116.5	116.5	110.9	110.9	116.5	116.5
51		95.5	95.5	95.5	95.5	95.5	85.5	95.5	95.5
54	114	91.7	91.7	91.7	91.7	91.7	91.7	91.7	91.7
57		88.4	88.4	88.4	88.4	88.4	88.4	88.4	88.4
60		85.5	85.5	85.5	85.5	85.5	85.5	85.5	85.5
63		82.9	82.9	82.9	82.9	82.9	82.9	82.9	82.9
66		80.6	80.6	80.6	80.6	80.6	80.6	80.6	80.6
69		78.3	78.3	78.3	78.3	78.3	78.3	78.3	78.3
72		75.0	75.0	75.0	75.0	75.0	75.0	75.0	75.0
30		133.0	152.1	133.0	194.3	133.0	152.1	133.0	194.3
36		120.0	130.5	120.0	144.2	120.0	130.5	120.0	144.2
42		115.3	115.3	120.0	127.4	115.3	115.3	120.0	127.4
48		104.0	104.0	114.9	114.9	104.0	104.0	114.9	114.9
51		94.1	94.1	94.1	94.1	94.1	94.1	94.1	94.1
54	120	90.3	90.3	90.3	90.3	90.3	90.3	90.3	90.3
57		87.0	87.0	87.0	87.0	87.0	87.0	87.0	87.0
60		84.0	84.0	84.0	84.0	84.0	84.0	84.0	84.0
63		81.4	81.4	81.4	81.4	81.4	81.4	81.4	81.4
66		79.0	79.0	79.0	79.0	79.0	79.0	79.0	79.0
69		76.9	76.9	76.9	76.9	76.9	76.9	76.9	76.9
72		75.0	75.0	75.0	75.0	75.0	75.0	75.0	75.0

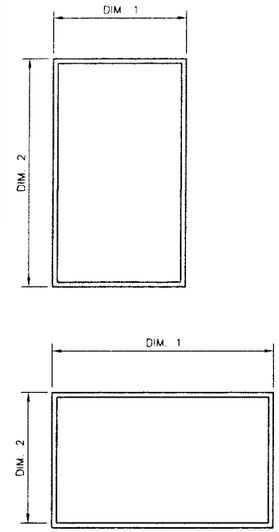

NOTE
LONG AND SHORT DIMENSIONS CAN BE ORIENTED VERICALLY OR HORIZONTALLY AS SHOWN.

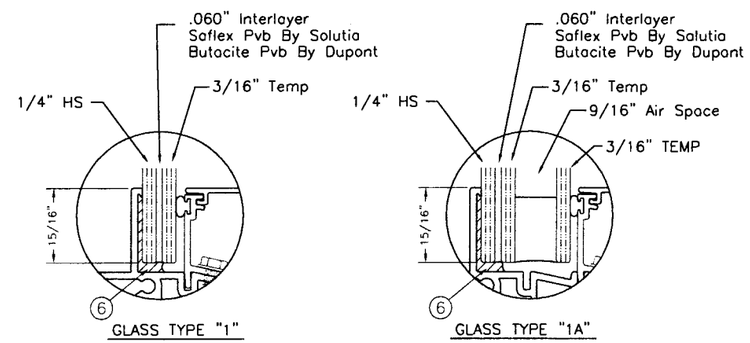

GLASS TYPES AVAILABLE

Engr: ARSHAD VIQAR
CIVIL
FLA. PE # 38863
C.A.N. 3538

APR 24 2009

Approved as complying with the Florida Building Code
Date JUNE 3, 2009
NOA# 09-0127.16
Miami Dade Product Control Division
By

FOR ANCHOR OPTIONS SEE SHEET 3

AL-FAROOQ CORPORATION
ENGINEERS & PRODUCT DEVELOPMENT
1235 S.W. 87 AVE
MIAMI, FLORIDA 33174
TEL. (305) 264-8100 FAX. (305) 262-6978

COMP-ANL\W09-04CGI

SERIES 410 FIXED WINDOW (S.M.I.)

CGI WINDOWS & DOORS
10100 N.W. 25TH STREET
MIAMI, FL. 33172
TEL. (305) 593-6590 FAX. (305) 593-6592

revisions:

no	date	by	description
A	04.06.09		NO CHANGE THIS SHEET

date: 01-14-09
scale: -
dr. by: -
chk. by:

drawing no. W09-04

TYPICAL INSTALLATION DETAILS

THESE DETAILS ARE TYPICAL ON ALL FOUR SIDES OF WINDOW

INSTALLATION DETAILS THRU 1X WOOD BUCKS INTO CONCRETE

FLANGE

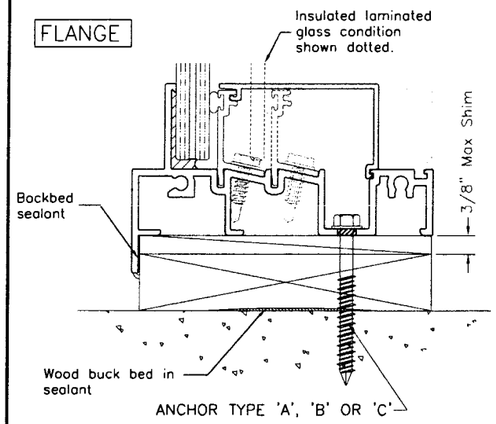

EQUAL LEG

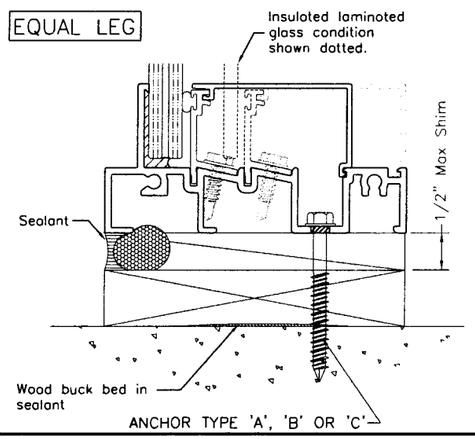

INSTALLATION DETAILS INTO 2X WOOD BUCKS OR INTO WOOD STRUCTURES

FLANGE

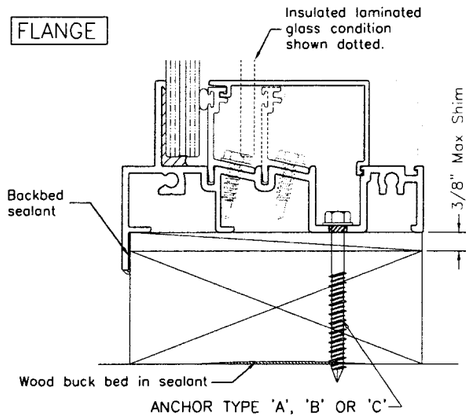

EQUAL LEG

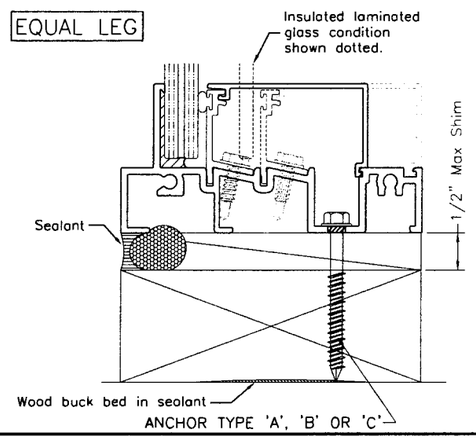

INSTALLATION DETAILS DIRECTLY INTO CONCRETE

FLANGE

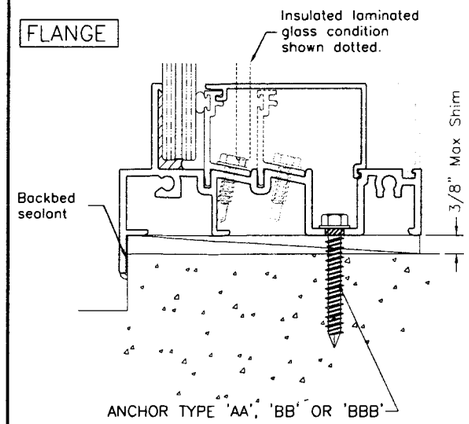

EQUAL LEG

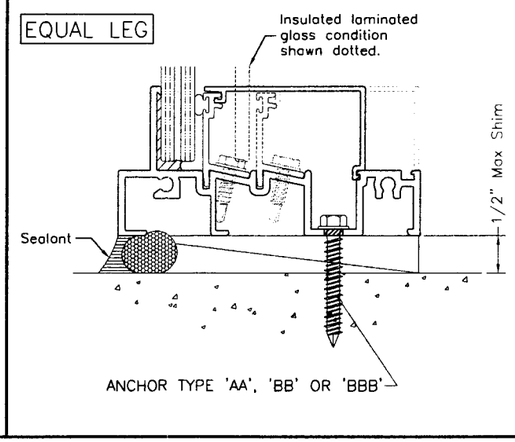

INSTALLATION DETAILS INTO METAL STRUCTURES OR INTO APPROVED MULLIONS

FLANGE

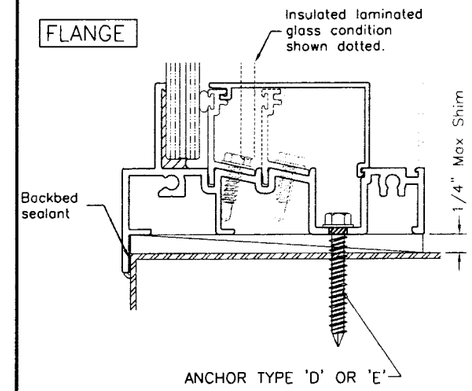

EQUAL LEG

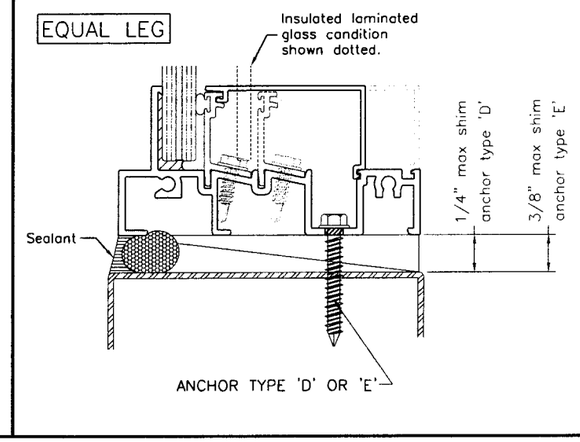

TYPICAL ANCHORS: SEE ELEV. FOR SPACING

TYPE 'A'

1/4" DIA. HILTI KWIK-CON II (Fu=163 KSI, Fy=157 KSI)

INTO 2BY WOOD BUCKS OR WOOD STRUCTURES
1-1/2" MIN. PENETRATION INTO WOOD

THRU 1BY BUCKS INTO CONC. OR MASONRY
1-1/4" MIN. EMBED INTO CONC. OR MASONRY

TYPE 'AA'

1/4" DIA. HILTI KWIK-CON II (Fu=163 KSI, Fy=157 KSI)

DIRECTLY INTO CONCRETE
1-3/8" MIN. EMBED INTO CONCRETE

TYPE 'B'

1/4" DIA. ULTRACON BY 'ELCO' (Fu=177 KSI, Fy=155 KSI)

INTO 2BY WOOD BUCKS OR WOOD STRUCTURES
1-1/2" MIN. PENETRATION INTO WOOD

THRU 1BY BUCKS INTO CONC. OR MASONRY
1-1/4" MIN. EMBED INTO CONC. OR MASONRY

TYPE 'BB'

1/4" DIA. ULTRACON BY 'ELCO' (Fu=177 KSI, Fy=155 KSI)

DIRECTLY INTO CONC. OR MASONRY
1-1/4" MIN. EMBED INTO CONC. OR MASONRY

TYPE 'BBB'

1/4" DIA. ULTRACON BY 'ELCO' (Fu=177 KSI, Fy=155 KSI)

DIRECTLY INTO MASONRY BLOCK
1-1/4" MIN. EMBED INTO MASONRY

TYPE 'C'

5/16" DIA. ULTRACON BY 'ELCO' (Fu=177 KSI, Fy=155 KSI)

INTO 2BY WOOD BUCKS OR WOOD STRUCTURES
1-1/2" MIN. PENETRATION INTO WOOD

THRU 1BY BUCKS INTO CONC. OR MASONRY
1-1/4" MIN. EMBED INTO CONC. OR MASONRY

TYPE 'D'

#14 SMS (GRADE 2 CRS)

INTO METAL STRUCTURES
STEEL : 12 GA. MIN. (Fy = 36 KSI MIN.)
ALUMINUM : 1/8" THK. MIN. (6063-T5 MIN.)

TYPE 'E'

1/4" DRIL-FLEX SELF DRILLING SCREWS (GRADE 2 CRS)

INTO METAL STRUCTURES
STEEL : 12 GA. MIN. (Fy = 36 KSI MIN.)
ALUMINUM : 1/8" THK. MIN. (6063-T5 MIN.)

(STEEL IN CONTACT WITH ALUMINUM TO BE PLATED OR PAINTED)
INTO MIAMI-DADE COUNTY APPROVED MULLIONS (MIN. THK. = .090")

ANCHOR OPTION I:

ALL ANCHORS AS SHOWN ABOVE.

ANCHOR OPTION II:

ANCHOR TYPES 'A', 'AA' & 'C' WITH 1/2" SHIM SPACE
ANCHOR TYPES 'B', 'BB', 'BBB', 'D' & 'E' WITH 1/4" SHIM SPACE

TYPICAL EDGE DISTANCE

INTO CONCRETE AND MASONRY = 2-1/2" MIN.
INTO WOOD STRUCTURE = 1" MIN.
INTO METAL STRUCTURE = 3/4" MIN.

CONCRETE f'c = 3000 PSI MIN.
MASONRY f'm = 1924 PSI MIN.

Engr: ARSHAD VIQAR
CIVIL
FLA. PE # 38863
C.A.N. 3538

APR 24 2009

Approved as complying with the Florida Building Code
Date JUNE 3, 2009
NOA# 09-0137.10
Miami Dade Product Control Division
By

AL-FAROOQ CORPORATION
ENGINEERS & PRODUCT DEVELOPMENT
1235 S.W. 87 AVE
MIAMI, FLORIDA 33174
TEL. (305) 264-8100 FAX. (305) 262-6978
COMP-ANL\W09-04CGI

SERIES 410 FIXED WINDOW (S.M.I.)

CGI WINDOWS & DOORS
10100 N.W. 25TH STREET
MIAMI, FL. 33172
TEL. (305) 593-6590 FAX. (305) 593-6592

revisions:

no	date	by	description
A	04.06.09		NO CHANGE THIS SHEET

date: 01-14-09
scale: -
dr. by: -
chk. by:

drawing no. W09-04

DESIGN LOAD CAPACITY – PSF (MULLION)			
WINDOW DIMS.		1 X 4 X 1/8" ALUM TUBE	2 X 6 X 1/8" ALUM TUBE
WIDTH	LENGTH	EXT.(+) & INT.(–)	EXT.(+) & INT.(–)
36"	72"	177.8	210.0
42"		152.4	210.0
48"		150.0	187.5
54"		148.1	166.7
60"		133.3	150.0
66"		121.2	136.4
72"		111.1	125.0
36"	84"	162.0	210.0
42"		142.1	183.7
48"		127.9	160.7
54"		117.6	142.9
60"		110.0	128.6
66"		103.9	116.9
72"		–	107.1
36"	96"	116.8	187.5
42"		102.3	160.7
48"		91.8	140.6
54"		83.9	125.0
60"		78.1	112.5
66"		–	102.3
72"		–	93.8
36"	102"	–	175.4
42"		–	151.3
48"		–	132.4
54"		–	117.6
60"		–	105.9
66"		–	96.3
72"		–	88.2
36"	108"	–	154.8
42"		–	134.5
48"		–	119.6
54"		–	108.3
60"		–	99.6
66"		–	90.9
72"		–	83.3
36"	114"	–	137.5
42"		–	119.3
48"		–	105.9
54"		–	95.7
60"		–	87.8
66"		–	81.5
72"		–	76.6
36"	120"	–	122.3
42"		–	106.2
48"		–	94.4
54"		–	85.2
60"		–	78.0
66"		–	72.2
72"		–	67.7

ANY SIZE OR DESIGN LOAD LESS THAN CHART IS ALLOWED.

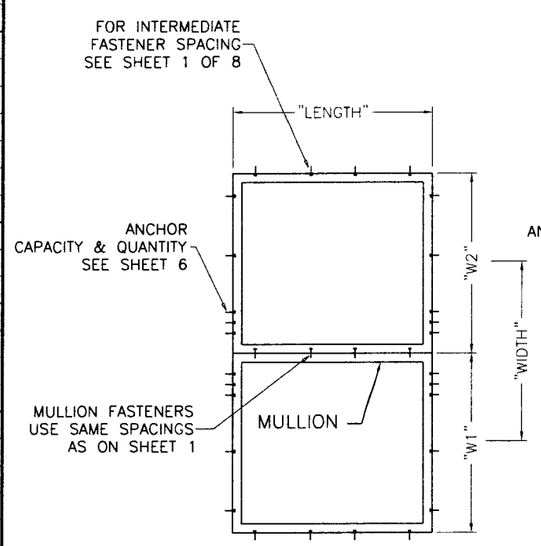

TYPICAL ELEVATION

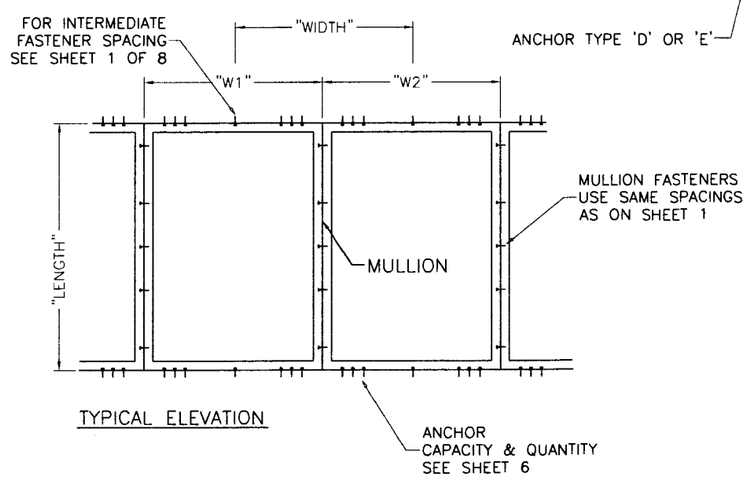

TYPICAL ELEVATION

$$\text{Width} = \frac{W1 + W2}{2}$$

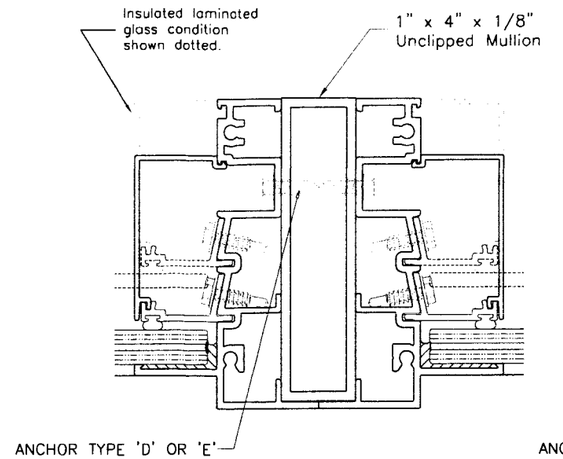

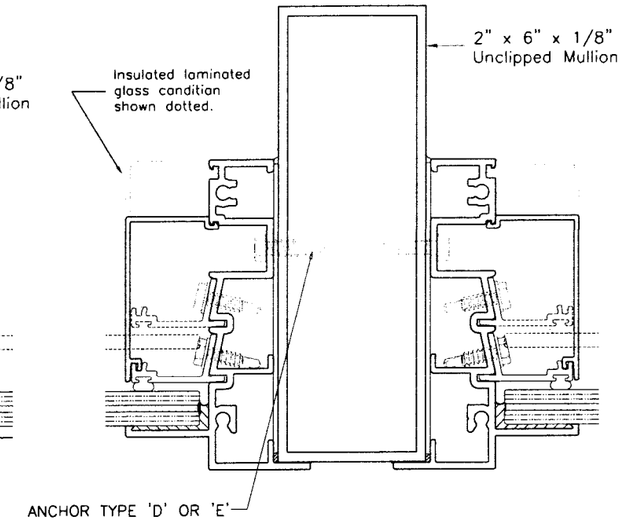

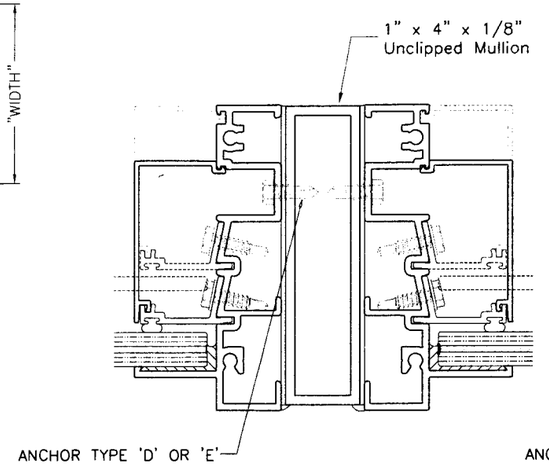

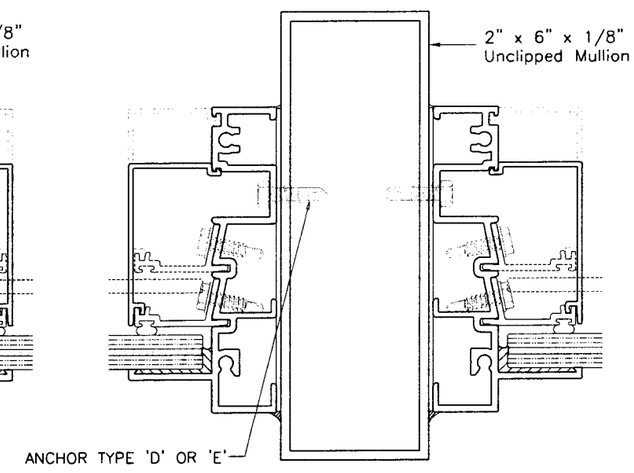

Engr: ARSHAD VIQAR
CIVIL
FLA. PE # 38663
C.A.N. 3538

APR 24 2009

Approved as complying with the Florida Building Code
Date JUNE 3, 2009
NOA# 09-0127.16
Miami Dade Product Control Division
By

AL-FAROOQ CORPORATION
ENGINEERS & PROJECT DEVELOPMENT
1235 S.W. 87 AVE
MIAMI, FLORIDA 33174
TEL. (305) 264-8100 FAX. (305) 262-6978

COMP-ANL\W09-04CGI

SERIES 410 FIXED WINDOW (S.M.I.)

CGI WINDOWS & DOORS
10100 N.W. 25TH STREET
MIAMI, FL. 33172
TEL. (305) 593-6590 FAX. (305) 593-6592

revisions:

no	date	by	description
A	04.06.09		REV. PER BCCO COMMENTS

date: 01-14-09
scale: –
dr. by: –
chk. by:

drawing no. W09-04

DESIGN LOAD CAPACITY – PSF (ANCHORS AT EACH SIDE OF MULLION)

WINDOW DIMS.		ANCHOR TYPE 'A'			ANCHOR TYPE 'AA'						ANCHOR TYPE 'B'					
		2/ SIDE	3/ SIDE	4/ SIDE	(2) ANCHORS ON EACH SIDE		(3) ANCHORS ON EACH SIDE		(4) ANCHORS ON EACH SIDE		(2) ANCHORS ON EACH SIDE		(3) ANCHORS ON EACH SIDE		(4) ANCHORS ON EACH SIDE	
WIDTH	LENGTH	1/2" SHIM	1/2" SHIM	1/2" SHIM	3/8" SHIM	1/2" SHIM	3/8" SHIM	1/2" SHIM	3/8" SHIM	1/2" SHIM	3/8" SHIM	1/2" SHIM	3/8" SHIM	1/2" SHIM	3/8" SHIM	1/2" SHIM
36"	72"	209.2	210.0	210.0	210.0	210.0	210.0	210.0	210.0	210.0	174.2	144.6	210.0	210.0	210.0	210.0
42"		189.8	210.0	210.0	210.0	203.8	210.0	210.0	210.0	210.0	158.1	131.2	210.0	196.8	210.0	210.0
48"		176.5	210.0	210.0	210.0	189.5	210.0	210.0	210.0	210.0	147.0	122.0	210.0	183.0	210.0	210.0
54"		167.3	210.0	210.0	210.0	179.7	210.0	210.0	210.0	210.0	139.4	115.7	209.1	173.5	210.0	210.0
60"		161.4	210.0	210.0	210.0	173.3	210.0	210.0	210.0	210.0	134.4	111.5	201.6	167.3	210.0	210.0
66"		158.0	210.0	210.0	207.7	169.6	210.0	210.0	210.0	210.0	131.6	109.2	197.4	163.8	210.0	210.0
72"		156.9	210.0	210.0	206.2	168.4	210.0	210.0	210.0	210.0	130.7	108.4	196.0	162.7	210.0	210.0
36"	84"	171.2	210.0	210.0	210.0	183.8	210.0	210.0	210.0	210.0	142.5	118.3	210.0	177.5	210.0	210.0
42"		153.7	210.0	210.0	202.0	165.0	210.0	210.0	210.0	210.0	128.0	106.2	192.0	159.3	210.0	210.0
48"		141.2	210.0	210.0	185.6	151.6	210.0	210.0	210.0	210.0	117.6	97.6	176.4	146.4	210.0	195.2
54"		132.1	198.2	210.0	173.7	141.8	210.0	210.0	210.0	210.0	110.0	91.3	165.1	137.0	210.0	182.6
60"		125.5	188.3	210.0	165.0	134.8	210.0	202.1	210.0	210.0	104.5	86.8	156.8	130.1	209.1	173.5
66"		120.8	181.2	210.0	158.8	129.7	210.0	194.6	210.0	210.0	100.6	83.5	150.9	125.3	201.2	167.0
72"		117.7	176.5	210.0	154.7	126.3	210.0	189.5	210.0	210.0	98.0	81.3	147.0	122.0	196.0	162.7
36"	96"	144.8	210.0	210.0	190.4	155.5	210.0	210.0	210.0	210.0	120.6	100.1	180.9	150.2	210.0	200.2
42"		129.1	193.6	210.0	169.7	138.6	210.0	207.9	210.0	210.0	107.5	89.2	161.3	133.9	210.0	178.5
48"		117.7	176.5	210.0	154.7	126.3	210.0	189.5	210.0	210.0	98.0	81.3	147.0	122.0	196.0	162.7
54"		109.1	163.7	210.0	143.5	117.2	210.0	175.8	210.0	210.0	90.9	75.4	136.3	113.2	181.8	150.9
60"		102.7	154.0	205.4	135.0	110.3	202.5	165.4	210.0	210.0	85.5	71.0	128.3	106.5	171.1	142.0
66"		97.8	146.7	195.6	128.6	105.0	192.8	157.5	210.0	210.0	81.5	67.6	122.2	101.4	162.9	135.2
72"		94.1	141.2	188.3	123.7	101.1	185.6	151.6	210.0	202.1	78.4	65.1	117.6	97.6	156.8	130.1
36"	102"	134.5	201.7	210.0	176.8	144.4	210.0	210.0	210.0	210.0	112.0	93.0	168.0	139.4	210.0	185.9
42"		119.5	179.3	210.0	157.1	128.3	210.0	192.5	210.0	210.0	99.6	82.6	149.3	123.9	199.1	165.2
48"		108.6	162.9	210.0	142.8	116.6	210.0	174.9	210.0	210.0	90.5	75.1	135.7	112.6	180.9	150.2
54"		100.4	150.6	200.8	132.0	107.8	198.0	161.7	210.0	210.0	83.6	69.4	125.4	104.1	167.3	138.8
60"		94.1	141.2	188.3	123.7	101.1	185.6	151.6	210.0	202.1	78.4	65.1	117.6	97.6	156.8	130.1
66"		89.3	133.9	178.6	117.4	95.9	176.1	143.8	210.0	191.7	74.4	61.7	111.6	92.6	148.7	123.4
72"		85.6	128.4	171.2	112.5	91.9	168.7	137.8	210.0	183.8	71.3	59.2	106.9	88.7	142.5	118.3
36"	108"	125.5	188.3	210.0	165.0	134.8	210.0	202.1	210.0	210.0	104.5	86.8	156.8	130.1	209.1	173.5
42"		111.3	166.9	210.0	146.3	119.5	210.0	179.2	210.0	210.0	92.7	76.9	139.0	115.4	185.4	153.9
48"		100.9	151.3	201.7	132.6	108.3	198.9	162.4	210.0	210.0	84.0	69.7	126.0	104.6	168.0	139.4
54"		93.0	139.5	185.9	122.2	99.8	183.3	149.7	210.0	199.6	77.4	64.3	116.1	96.4	154.9	128.5
60"		86.9	130.3	173.8	114.2	93.3	171.3	139.9	210.0	186.6	72.4	60.1	108.6	90.1	144.7	120.1
66"		82.2	123.2	164.3	108.0	88.2	162.0	132.3	210.0	176.4	68.4	56.8	102.6	85.2	136.8	113.6
72"		78.4	117.7	156.9	103.1	84.2	154.7	126.3	206.2	168.4	65.3	54.2	98.0	81.3	130.7	108.4
36"	114"	117.7	176.5	210.0	154.7	126.3	210.0	189.5	210.0	210.0	98.0	81.3	147.0	122.0	196.0	162.7
42"		104.1	156.2	208.2	136.8	111.8	205.3	167.7	210.0	210.0	86.7	72.0	130.1	107.9	173.4	143.9
48"		94.1	141.2	188.3	123.7	101.1	185.6	151.6	210.0	202.1	78.4	65.1	117.6	97.6	156.8	130.1
54"		86.6	129.8	173.1	113.8	92.9	170.7	139.4	210.0	185.9	72.1	59.8	108.1	89.7	144.2	119.7
60"		80.7	121.0	161.4	106.1	86.6	159.1	129.9	210.0	173.3	67.2	55.8	100.8	83.7	134.4	111.5
66"		76.1	114.1	152.1	100.0	81.7	150.0	122.5	200.0	163.3	63.4	52.6	95.0	78.9	126.7	105.2
72"		72.4	108.6	144.8	95.2	77.7	142.8	116.6	190.4	155.5	60.3	50.1	90.5	75.1	120.6	100.1
36"	120"	110.7	166.1	210.0	145.6	118.9	210.0	178.4	210.0	210.0	92.2	76.5	138.4	114.8	184.5	153.1
42"		97.8	146.7	195.6	128.6	105.0	192.8	157.5	210.0	210.0	81.5	67.6	122.2	101.4	162.9	135.2
48"		88.3	132.4	176.5	116.0	94.8	174.0	142.1	210.0	189.5	73.5	61.0	110.3	91.5	147.0	122.0
54"		81.0	121.5	161.9	106.4	86.9	159.7	130.4	210.0	173.9	67.4	56.0	101.2	84.0	134.9	111.9
60"		75.3	113.0	150.6	99.0	80.9	148.5	121.3	198.0	161.7	62.7	52.1	94.1	78.1	125.4	104.1
66"		70.8	106.2	141.6	93.1	76.0	139.6	114.1	186.2	152.1	59.0	49.0	88.5	73.4	118.0	97.9
72"		67.2	100.9	134.5	88.4	72.2	132.6	108.3	176.8	144.4	56.0	46.5	84.0	69.7	112.0	93.0

WINDOW DIMS.		ANCHOR TYPE 'BB'									ANCHOR TYPE 'C'			ANCHOR TYPE 'D'		
		(2) ANCHORS ON EACH SIDE			(3) ANCHORS ON EACH SIDE			(4) ANCHORS ON EACH SIDE			2/ SIDE	3/ SIDE	4/ SIDE	2/ SIDE	3/ SIDE	4/ SIDE
WIDTH	LENGTH	1/4" SHIM	3/8" SHIM	1/2" SHIM	1/4" SHIM	3/8" SHIM	1/2" SHIM	1/4" SHIM	3/8" SHIM	1/2" SHIM	1/2" SHIM	1/2" SHIM	1/2" SHIM	1/4" SHIM	1/4" SHIM	1/4" SHIM
36"	72"	210.0	179.6	144.6	210.0	210.0	210.0	210.0	210.0	210.0	210.0	210.0	210.0	210.0	210.0	210.0
42"		200.1	163.0	131.2	210.0	210.0	196.8	210.0	210.0	210.0	194.2	210.0	210.0	210.0	210.0	210.0
48"		186.0	151.5	122.0	210.0	210.0	183.0	210.0	210.0	210.0	180.5	210.0	210.0	210.0	210.0	210.0
54"		176.4	143.6	115.7	210.0	210.0	173.5	210.0	210.0	210.0	171.1	210.0	210.0	210.0	210.0	210.0
60"		170.1	138.5	111.5	210.0	207.8	167.3	210.0	210.0	210.0	165.0	210.0	210.0	210.0	210.0	210.0
66"		166.5	135.6	109.2	210.0	203.4	163.8	210.0	210.0	210.0	161.6	210.0	210.0	210.0	210.0	210.0
72"		165.3	134.7	108.4	210.0	202.0	162.7	210.0	210.0	210.0	160.4	210.0	210.0	210.0	210.0	210.0
36"	84"	180.4	146.9	118.3	210.0	210.0	177.5	210.0	210.0	210.0	175.0	210.0	210.0	210.0	210.0	210.0
42"		162.0	131.9	106.2	210.0	197.9	159.3	210.0	210.0	210.0	157.2	210.0	210.0	208.5	210.0	210.0
48"		148.8	121.2	97.6	210.0	181.8	146.4	210.0	210.0	195.2	144.4	210.0	210.0	191.6	210.0	210.0
54"		139.2	113.4	91.3	208.8	170.1	137.0	210.0	210.0	182.6	135.1	202.7	210.0	179.3	210.0	210.0
60"		132.3	107.7	86.8	198.4	161.6	130.1	210.0	210.0	173.5	128.4	192.5	210.0	170.3	210.0	210.0
66"		127.3	103.7	83.5	191.0	155.6	125.3	210.0	207.4	167.0	123.6	185.3	210.0	163.9	210.0	210.0
72"		124.0	101.0	81.3	186.0	151.5	122.0	210.0	202.0	162.7	120.3	180.5	210.0	159.7	210.0	210.0
36"	96"	152.6	124.3	100.1	210.0	186.5	150.2	210.0	210.0	200.2	148.1	210.0	210.0	196.5	210.0	210.0
42"		136.0	110.8	89.2	204.1	166.2	133.9	210.0	210.0	178.5	132.0	198.0	210.0	175.2	210.0	210.0
48"		124.0	101.0	81.3	186.0	151.5	122.0	210.0	202.0	162.7	120.3	180.5	210.0	159.7	210.0	210.0
54"		115.0	93.7	75.4	172.5	140.5	113.2	210.0	187.4	150.9	111.6	167.4	210.0	148.1	210.0	210.0
60"		108.2	88.1	71.0	162.3	132.2	106.5	210.0	176.3	142.0	105.0	157.5	210.0	139.3	209.0	210.0
66"		103.1	83.9	67.6	154.6	125.9	101.4	206.1	167.9	135.2	100.0	150.0	200.0	132.7	199.1	210.0
72"		99.2	80.8	65.1	148.8	121.2	97.6	198.4	161.6	130.1	96.3	144.4	192.5	127.7	191.6	210.0
36"	102"	141.7	115.4	93.0	210.0	173.1	139.4	210.0	210.0	185.9	137.5	206.3	210.0	182.5	210.0	210.0
42"		126.0	102.6	82.6	189.0	153.9	123.9	210.0	205.2	165.2	122.2	183.4	210.0	162.2	210.0	210.0
48"		114.5	93.2	75.1	171.7	139.8	112.6	210.0	186.5	150.2	111.1	166.6	210.0	147.4	210.0	210.0
54"		105.8	86.2	69.4	158.7	129.3	104.1	210.0	172.4	138.8	102.7	154.0	205.4	136.2	204.4	210.0
60"		99.2	80.8	65.1	148.8	121.2	97.6	198.4	161.6	130.1	96.3	144.4	192.5	127.7	191.6	210.0
66"		94.1	76.6	61.7	141.2	115.0	92.6	188.2	153.3	123.4	91.3	137.0	182.6	121.2	181.8	210.0
72"		90.2	73.5	59.2	135.3	110.2	88.7	180.4	146.9	118.3	87.5	131.3	175.0	116.1	174.2	210.0
36"	108"	132.3	107.7	86.8	198.4	161.6	130.1	210.0	210.0	173.5	128.4	192.5	210.0	170.3	210.0	210.0
42"		117.3	95.5	76.9	175.9	143.3	115.4	210.0	191.1	153.9	113.8	170.7	210.0	151.0	210.0	210.0
48"		106.3	86.6	69.7	159.4	129.9	104.6	210.0	173.1	139.4	103.1	154.7	206.3	136.9	205.3	210.0
54"		98.0	79.8	64.3	147.0	119.7	96.4	196.0	159.6	128.5	95.1	142.6	190.2	126.2	189.2	210.0
60"		91.6	74.6	60.1	137.4	111.9	90.1	183.1	149.2	120.1	88.9	133.3	177.7	117.9	176.9	210.0
66"		86.6	70.5	56.8	129.9	105.8	85.2	173.1	141.0	113.6	84.0	126.0	168.0	111.5	167.2	210.0
72"		82.7	67.3	54.2	124.0	101.0	81.3	165.3	134.7	108.4	80.2	120.3	160.4	106.4	159.7	210.0
36"	114"	124.0	101.0	81.3	186.0	151.5	122.0	210.0	202.0	162.7	120.3	180.5	210.0	159.7	210.0	210.0
42"		109.7	89.4	72.0	164.6	134.0	107.9	210.0	178.7	143.9	106.5	159.7	210.0	141.3	210.0	210.0
48"		99.2	80.8	65.1	148.8	121.2	97.6	198.4	161.6	130.1	96.3	144.4	192.5	127.7	191.6	210.0
54"		91.2	74.3	59.8	136.8	111.4	89.7	182.4	148.6	119.7	88.5	132.8	177.0	117.5	176.2	210.0
60"		85.0	69.3	55.8	127.5	103.9	83.7	170.1	138.5	111.5	82.5	123.8	165.0	109.5	164.2	210.0
66"		80.2	65.3	52.6	120.2	97.9	78.9	160.3	130.6	105.2	77.8	116.7	155.6	103.2	154.8	206.4
72"		76.3	62.2	50.1	114.5	93.2	75.1	152.6	124.3	100.1	74.1	111.1	148.1	98.3	147.4	196.5
36"	120"	116.7	95.1	76.5	175.1	142.6	114.8	210.0	190.1	153.1	113.3	169.9	210.0	150.3	210.0	210.0
42"		103.1	83.9	67.6	154.6	125.9	101.4	206.1	167.9	135.2	100.0	150.0	200.0	132.7	199.1	210.0
48"		93.0	75.8	61.0	139.5	113.6	91.5	186.0	151.5	122.0	90.3	135.4	180.5	119.8	179.6	210.0
54"		85.3	69.5	56.0	128.0	104.3	84.0	170.7	139.0	111.9	82.8	124.2	165.6	109.9	164.8	210.0
60"		78.1	64.6	52.1	119.0	97.0	78.1	158.7	129.3	104.1	77.0	115.5	154.0	102.2	153.3	204.4
66"		73.4	60.8	49.0	111.9	91.2	73.4	149.3	121.6	97.9	72.4	108.6	144.9	96.1	144.2	192.2
72"		69.7	57.7	46.5	106.3	86.6	69.7	141.7	115.4	93.0	68.8	103.1	137.5	91.2	136.9	182.5

WINDOW DIMS.		ANCHOR TYPE 'E'								
		(2) ANCHORS ON EACH SIDE			(3) ANCHORS ON EACH SIDE			(4) ANCHORS ON EACH SIDE		
WIDTH	LENGTH	1/4" SHIM	3/8" SHIM	1/2" SHIM	1/4" SHIM	3/8" SHIM	1/2" SHIM	1/4" SHIM	3/8" SHIM	1/2" SHIM
36"	72"	210.0	151.1	123.3	210.0	210.0	184.9	210.0	210.0	210.0
42"		210.0	137.1	111.9	210.0	205.7	167.8	210.0	210.0	210.0
48"		197.5	127.5	104.0	210.0	191.3	156.0	210.0	210.0	208.0
54"		187.3	120.9	98.6	210.0	181.3	147.9	210.0	210.0	197.2
60"		180.6	116.6	95.1	210.0	174.9	142.6	210.0	210.0	190.2
66"		176.8	114.1	93.1	210.0	171.2	139.6	210.0	210.0	186.2
72"		175.6	113.3	92.4	210.0	170.0	138.7	210.0	210.0	184.9
36"	84"	191.5	123.6	100.8	210.0	185.5	151.3	210.0	210.0	201.7
42"		172.0	111.0	90.6	210.0	166.5	135.8	210.0	210.0	181.1
48"		158.0	102.0	83.2	210.0	153.0	124.8	210.0	204.0	166.4
54"		147.8	95.4	77.8	210.0	143.2	116.8	210.0	190.9	155.7
60"		140.4	90.7	74.0	210.0	136.0	110.9	210.0	181.3	147.9
66"		135.2	87.3	71.2	202.8	130.9	106.8	210.0	174.5	142.4
72"		131.7	85.0	69.3	197.5	127.5	104.0	210.0	170.0	138.7
36"	96"	162.1	104.6	85.3	210.0	156.9	128.0	210.0	209.2	170.7
42"		144.5	93.3	76.1	210.0	139.9	114.1	210.0	186.5	152.1
48"		131.7	85.0	69.3	197.5	127.5	104.0	210.0	170.0	138.7
54"		122.1	78.8	64.3	183.2	118.3	96.5	210.0	157.7	128.6
60"		114.9	74.2	60.5	172.4	111.3	90.8	210.0	148.4	121.0
66"		109.4	70.6	57.6	164.2	106.0	86.4	210.0	141.3	115.3
72"		105.3	68.0	55.5	158.0	102.0	83.2	210.0	136.0	110.9
36"	102"	150.5	97.1	79.2	210.0	145.7	118.9	210.0	194.3	158.5
42"		133.8	86.3	70.4	200.6	129.5	105.7	210.0	172.7	140.9
48"		121.5	78.5	64.0	182.3	117.7	96.0	210.0	156.9	128.0
54"		112.4	72.5	59.2	168.5	108.8	88.7	210.0	145.1	118.3
60"		105.3	68.0	55.5	158.0	102.0	83.2	210.0	136.0	110.9
66"		99.9	64.5	52.6	149.9	96.8	78.9	199.8	129.0	105.2
72"		95.8	61.8	50.4	143.6	92.7	75.6	191.5	123.6	100.8
36"	108"	140.4	90.7	74.0	210.0	136.0	110.9	210.0	181.3	147.9
42"		124.5	80.4	65.6	186.8	120.6	98.4	210.0	160.8	131.2
48"		112.9	72.9	59.4	169.3	109.3	89.1	210.0	145.7	118.9
54"		104.0	67.2	54.8	156.0	100.7	82.2	208.1	134.3	109.6
60"		97.2	62.8	51.2	145.8	94.2	76.8	194.5	125.5	102.4
66"		91.9	59.3	48.4	137.9	89.0	72.6	183.9	118.7	96.8
72"		87.8	56.7	46.2	131.7	85.0	69.3	175.6	113.3	92.4
36"	114"	131.7	85.0	69.3	197.5	127.5	104.0	210.0	170.0	138.7
42"		116.5	75.2	61.3	174.7	112.8	92.0	210.0	150.4	122.7
48"		105.3	68.0	55.5	158.0	102.0	83.2	210.0	136.0	110.9
54"		96.9	62.5	51.0	145.3	93.8	76.5	193.7	125.1	102.0
60"		90.3	58.3	47.5	135.4	87.4	71.3	180.6	116.6	95.1
66"		85.1	54.9	44.8	127.7	82.4	67.2	170.2	109.9	89.6
72"		81.0	52.3	42.7	121.5	78.5	64.0	162.1	104.6	85.3
36"	120"	123.9	80.0	65.3	185.9	120.0	97.9	210.0	160.0	130.5
42"		109.4	70.6	57.6	164.2	106.0	86.4	210.0	141.3	115.3
48"		98.8	63.8	52.0	148.1	95.6	78.0	197.5	127.5	104.0
54"		90.6	58.5	47.7	135.9	87.7	71.6	181.2	117.0	95.4
60"		84.3	54.4	44.4	126.4	81.6	66.6	168.5	108.8	88.7
66"		79.2	51.2	41.7	118.9	76.7	62.6	158.5	102.3	83.5
72"		75.2	48.6	39.6	112.9	72.9	59.4	150.5	97.1	79.2

INTERPOLATION FROM THESE CHARTS IS ALLOWED.

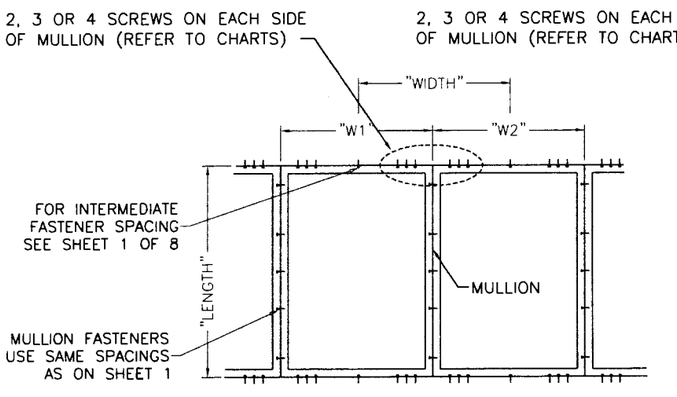

TYPICAL ELEVATION

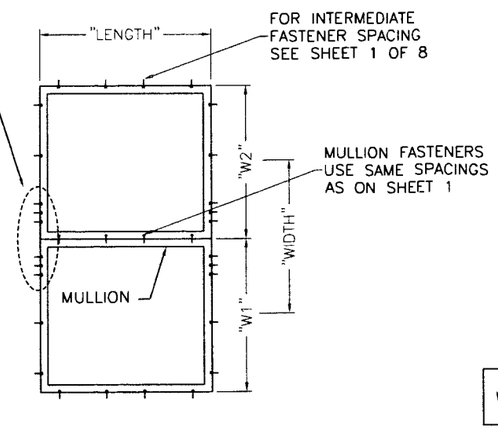

TYPICAL ELEVATION

$$\text{Width} = \frac{W1 + W2}{2}$$

Engr: ARSHAD VIQAR
CIVIL
FLA. PE # 38863
C.A.N. 3538

APR 24 2009

Approved as complying with the Florida Building Code
Date June 3, 2009
NOA# 09-0137.16
Miami Dade Product Control Division
By

AL-FAROOQ CORPORATION
ENGINEERS & PRODUCT DEVELOPMENT
1235 S.W. 87 AVE
MIAMI, FLORIDA 33174
TEL. (305) 264-8100 FAX. (305) 262-6978
COMP-ANL\W09-04CGI

SERIES 410 FIXED WINDOW (S.M.I.)

CGI WINDOWS & DOORS
10100 N.W. 25TH STREET
MIAMI, FL. 33172
TEL. (305) 593-6590 FAX. (305) 593-6592

revisions:

no	date	by	description
A	04.06.09		REV. PER BCCO COMMENTS

date: 01-14-09
scale: -
dr. by: -
chk. by:

drawing no. W09-04

DESIGN LOAD CAPACITY – PSF (MULLION) 2 X 4 X 1/8" ALUM TUBE			
WINDOW DIMS.		LAMINATED GLASS	INSUL. LAM. GLASS
WIDTH	LENGTH	EXT.(+) & INT.(–)	EXT.(+) & INT.(–)
72"	72"	100.0	80.0
36"	84"	100.0	100.0
48"		90.0	57.0
68"		59.0	37.0

ANY SIZE OR DESIGN LOAD LESS THAN CHART IS ALLOWED.

DESIGN LOAD CAPACITY – PSF (MULLION) 2 X 6 X 1/8" ALUM TUBE			
WINDOW DIMS.		LAMINATED GLASS	INSUL. LAM. GLASS
WIDTH	LENGTH	EXT.(+) & INT.(–)	EXT.(+) & INT.(–)
84"	72"	100.0	100.0
60"	96"	100.0	100.0
84"		75.0	75.0
60"	108"	75.0	72.0
72"		68.0	58.0
48"	120"	75.0	68.0
60"		60.0	51.0
72"		49.0	36.0

ANY SIZE OR DESIGN LOAD LESS THAN CHART IS ALLOWED.

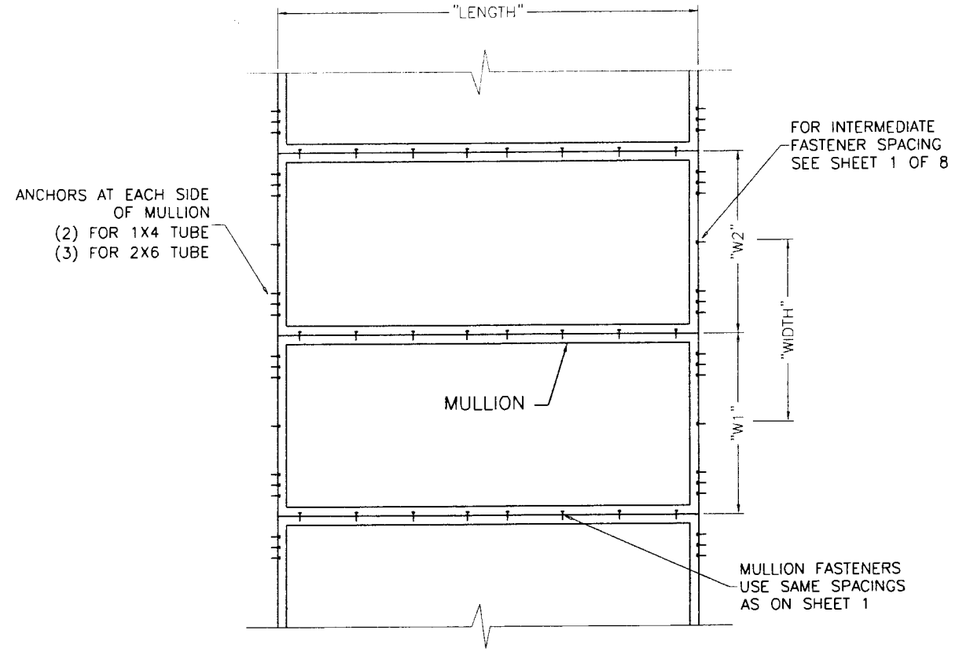

TYPICAL ELEVATION

$$\text{Width} = \frac{W1 + W2}{2}$$

$$W2 \leq W1$$

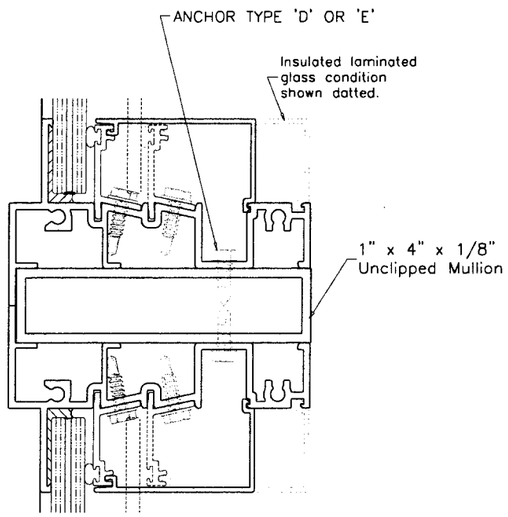

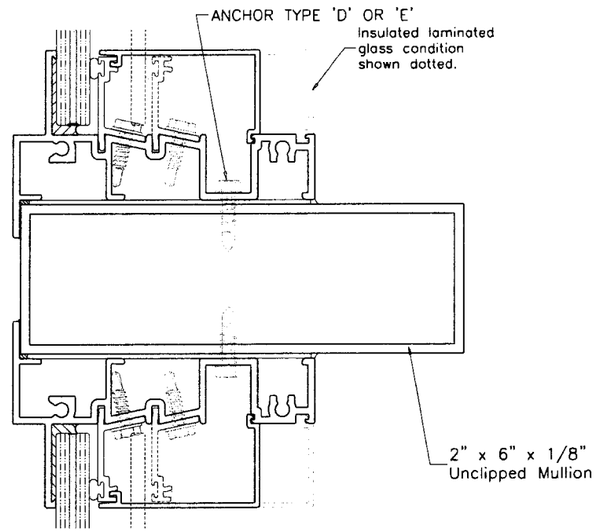

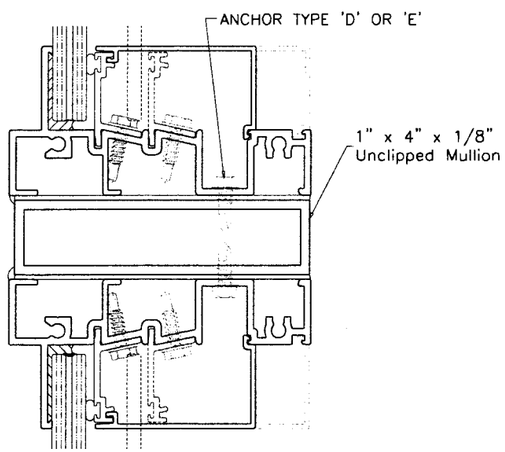

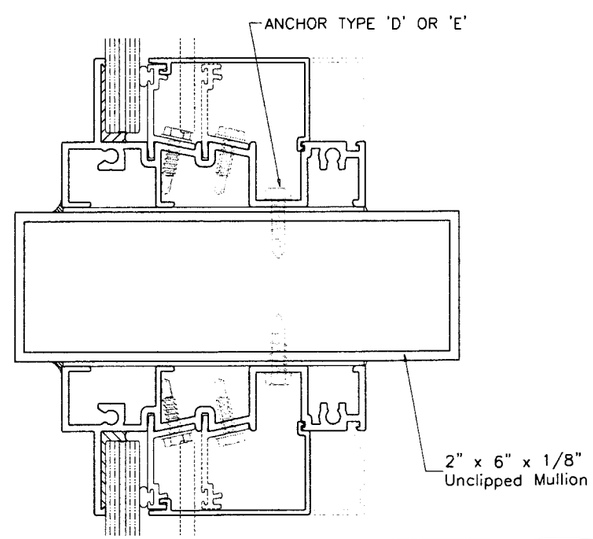

Engr: ARSHAD VIQAR
CIVIL
FLA PE # 38863
C.A.N. 3538

APR 24 2009

Approved as complying with the Florida Building Code
Date JUNE 3, 2009
NOA# 09-0127.16
Miami Dade Product Control Division
By

AL-FAROOQ CORPORATION
ENGINEERS & PRODUCT DEVELOPMENT
1235 S.W. 87 AVE
MIAMI, FLORIDA 33174
TEL. (305) 264-8100 FAX. (305) 262-6978

COMP-ANL\W09-04CGI

SERIES 410 FIXED WINDOW (S.M.I.)

CGI WINDOWS & DOORS
10100 N.W. 25TH STREET
MIAMI, FL. 33172
TEL. (305) 593-6590 FAX. (305) 593-6592

revisions:

no	date	by	description
A	04.06.09		REV. PER BCCO COMMENTS

date: 01-14-09
scale: –
dr. by: –
chk. by:

drawing no. W09-04

DESIGN LOAD CAPACITY - PSF			
WINDOW DIMS.		ANCHORS TYPE	
DIM. 1	DIM. 2	'A', 'B' 'AA', 'BB'	'BBB'
30"	48"	210.0	193.2
36"		210.0	177.1
42"		210.0	168.6
48"		208.0	166.0
51"		184.9	147.6
57"		151.3	120.7
60"		138.7	110.7
63"		160.0	127.7
66"		148.6	118.6
69"		138.7	110.7
72"		130.0	103.8
30"	54"	204.8	163.4
36"		184.9	147.6
42"		172.9	138.0
48"		166.4	132.8
51"		164.9	131.6
57"		147.9	118.0
60"		134.5	107.3
63"		154.1	123.0
66"		142.2	113.5
69"		132.1	105.4
72"		123.3	98.4
30"	60"	177.5	141.7
36"		158.5	126.5
42"		146.3	116.7
48"		138.7	110.7
51"		136.2	108.7
57"		133.5	106.5
60"		133.1	106.2
63"		151.3	120.7
66"		138.7	110.7
69"		128.0	102.2
72"		118.9	94.9
30"	66"	195.8	156.2
36"		173.3	138.3
42"		158.5	126.5
48"		148.6	118.6
51"		145.0	115.7
57"		140.1	111.8
60"		138.7	110.7
63"		137.8	110.0
66"		137.5	109.8
69"		126.1	100.6
72"		116.4	92.9
30"	72"	175.2	139.8
36"		154.1	123.0
42"		139.8	111.6
48"		130.0	103.8
51"		126.3	100.8
57"		120.8	96.4
60"		118.9	94.9
63"		117.4	93.7
66"		116.4	92.9
69"		115.8	92.4
72"		115.6	92.2

DESIGN LOAD CAPACITY - PSF			
WINDOW DIMS.		ANCHORS TYPE	
DIM. 1	DIM. 2	'A', 'B' 'AA', 'BB'	'BBB'
30"	78"	190.2	151.8
36"		166.4	132.8
42"		150.1	119.8
48"		138.7	110.7
51"		134.2	107.1
57"		127.4	101.7
60"		124.8	99.6
63"		122.7	97.9
66"		121.0	96.6
69"		119.7	95.6
72"		118.9	94.9
30"	84"	173.6	138.6
36"		151.3	120.7
42"		135.8	108.4
48"		124.8	99.6
51"		120.5	96.1
57"		113.6	90.7
60"		110.9	88.5
63"		108.7	86.7
66"		106.8	85.2
69"		105.2	84.0
72"		104.0	83.0
30"	90"	159.7	127.5
36"		138.7	110.7
42"		124.0	99.0
48"		113.5	90.5
51"		109.3	87.2
57"		102.5	81.8
60"		99.8	79.7
63"		97.5	77.8
66"		95.5	76.2
69"		93.9	74.9
72"		92.4	73.8
30"	96"	172.6	137.7
36"		149.3	119.2
42"		133.1	106.2
48"		121.3	96.8
51"		116.6	93.1
57"		109.0	87.0
60"		105.9	84.5
63"		103.2	82.4
66"		100.8	80.5
69"		98.8	78.9
72"		97.1	77.5
30"	102"	160.7	128.2
36"		138.7	110.7
42"		123.3	98.4
48"		112.0	89.4
51"		107.5	85.8
57"		100.1	79.9
60"		97.1	77.5
63"		94.4	75.3
66"		92.1	73.5
69"		90.0	71.9
72"		88.2	70.4

DESIGN LOAD CAPACITY - PSF			
WINDOW DIMS.		ANCHORS TYPE	
DIM. 1	DIM. 2	'A', 'B' 'AA', 'BB'	'BBB'
30"	108"	150.3	119.9
36"		129.4	103.3
42"		114.8	91.6
48"		104.0	83.0
51"		99.7	79.5
57"		92.5	73.9
60"		89.6	71.5
63"		87.0	69.4
66"		84.7	67.6
69"		82.7	66.0
72"		80.9	64.6
30"	114"	161.4	128.8
36"		138.7	110.7
42"		122.7	97.9
48"		110.9	88.5
51"		106.2	84.7
57"		98.3	78.5
60"		95.1	75.9
63"		92.2	73.6
66"		89.6	71.5
69"		87.4	69.7
72"		85.3	68.1
30"	120"	152.1	121.4
36"		130.5	104.2
42"		115.3	92.0
48"		104.0	83.0
51"		99.4	79.4
57"		91.9	73.3
60"		88.7	70.8
63"		86.0	68.6
66"		83.5	66.6
69"		81.2	64.8
72"		79.2	63.2

INTERPOLATION FROM THESE CHARTS IS ALLOWED

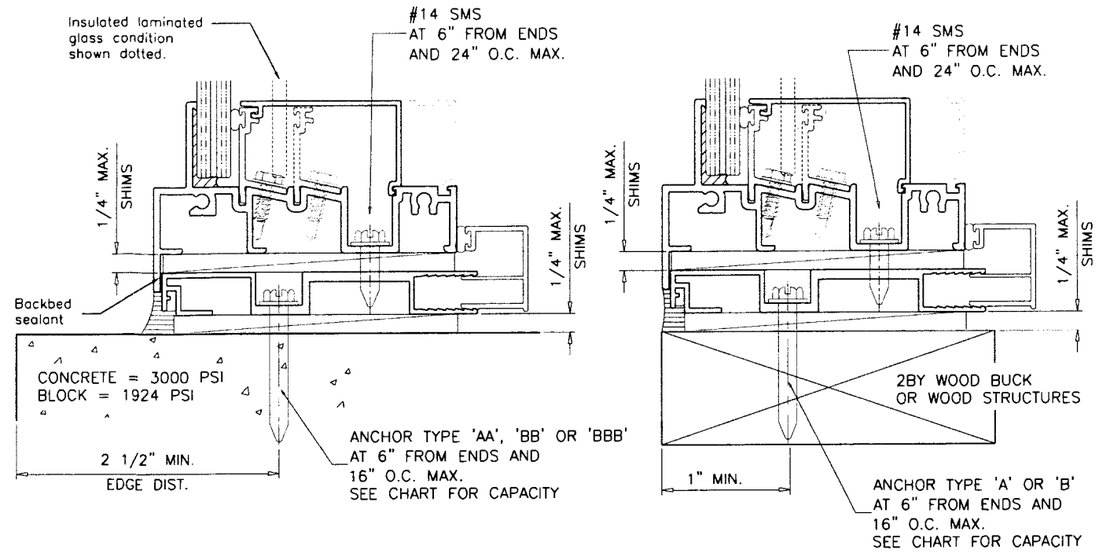

TYPICAL INSTALLATION DETAIL
ON ALL FOUR SIDES

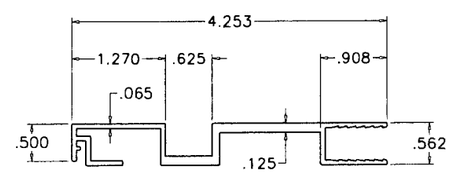

ALUMINUM BUCK
6063-T6

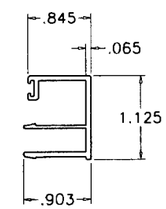

OPTIONAL COVER
6063-T6

ALUMINUM BUCK FRAMING DETAILS

Engr: ARSHAD VIQAR
CIVIL
FLA. PE # 38863
C.A.N. 3538

APR 24 2009

Approved as complying with the Florida Building Code
Date JUNE 3, 2009
NOA# 09-0127.16
Miami Dade Product Control Division
By Manuel Diaz

AL-FAROOQ CORPORATION
ENGINEERS & PRODUCT DEVELOPMENT
1235 S.W. 87 AVE
MIAMI, FLORIDA 33174
TEL. (305) 264-8100 FAX. (305) 262-6978
COMP-ANL\W09-04CGI

SERIES 410 FIXED WINDOW (S.M.I.)

CGI WINDOWS & DOORS
10100 N.W. 25TH STREET
MIAMI, FL. 33172
TEL. (305) 593-6590 FAX. (305) 593-6592

revisions:

no	date	by	description
A	04.06.09		NO CHANGE THIS SHEET

date: 01-14-09
scale: -
dr. by: -
chk. by:

drawing no.
W09-04

sheet 7 of 8

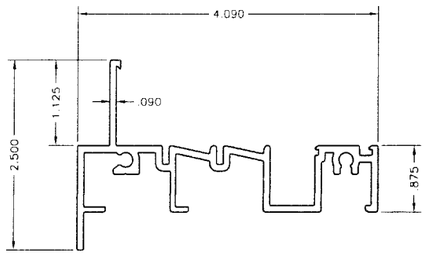

① Flange Frame

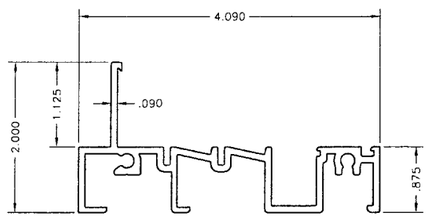

② Equal Leg Frame

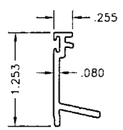

③ Glass Stop

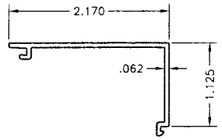

④ Standard Cover

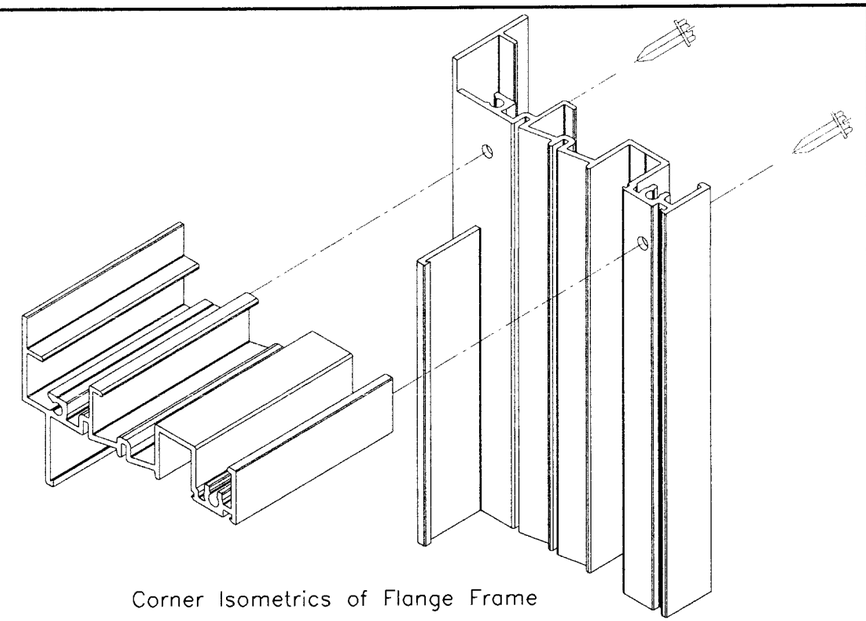

Corner Isometrics of Flange Frame

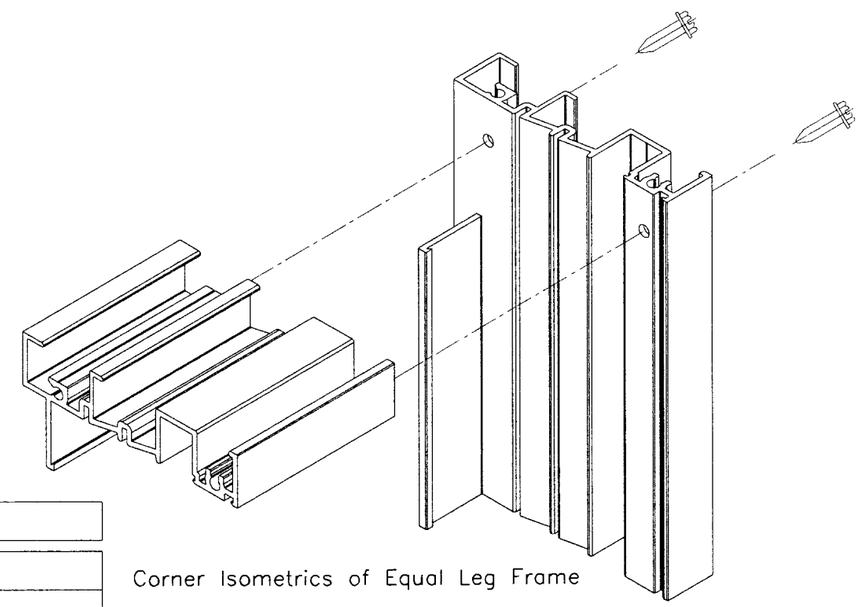

Corner Isometrics of Equal Leg Frame

Bill of Materials

Item	Part No. or Name	Qty.	Description	Material	Manufacturer / Supplier	Remarks
①	CGI-700	Varies	Main Frame (Flange)	Aluminum 6063-T6	Custom Extruded for CGI	Continuous on 4 sides
②	CGI-703	Varies	Main Frame (Equal Leg)	Aluminum 6063-T6	Custom Extruded for CGI	Continuous on 4 sides
③	CGI-701	Varies	Glass Stop	Aluminum 6063-T6	Custom Extruded for CGI	Continuous on 4 sides
④	CGI-702	Varies	Standard Cover	Aluminum 6063-T5	Custom Extruded for CGI	Continuous on 4 sides
⑤	Glass Stop Screw	Varies	#10 x 3/4" Hex Hd Self Drilling	Steel	Varies	at 6" from ends and 12" on center
⑥	Varies	Varies	GE-1200 or GE-2000 or DOW-995	Silicone	General Electric or Dow Corning	Structural Silicone
⑦	CGI-382V	Varies	Glass Stop Bulb	Vinyl	Custom Extruded	
⑧	Frame Screw	8	#12 x 1 1/4" Hex Hd SMS	S/S	Varies	2 per carner

Engr: ARSHAD VIQAR
CIVIL
FLA. PE # 38863
C.A.N. 3538

APR 24 2009

Approved as complying with the Florida Building Code
Date JUNE 3, 2009
NOA# 09-0127.16
Miami Dade Product Control Division
By

AL-FAROOQ CORPORATION
ENGINEERS & PRODUCT DEVELOPMENT
1235 S.W. 87 AVE
MIAMI, FLORIDA 33174
TEL. (305) 264-8100 FAX. (305) 262-6978

COMP-ANL\W09-04CGI

SERIES 410 FIXED WINDOW (S.M.I.)

CGI WINDOWS & DOORS
10100 N.W. 25TH STREET
MIAMI, FL. 33172
TEL. (305) 593-6590 FAX. (305) 593-6592

revisions:

no	date	by	description
A	04.06.09		NO CHANGE THIS SHEET

date: 01-14-09
scale: -
dr. by: -
chk. by:

drawing no. W09-04