MIAMI-DADE COUNTY
BUILDING CODE COMPLIANCE OFFICE (BCCO)
PRODUCT CONTROL DIVISION

MIAMI-DADE COUNTY, FLORIDA
METRO-DADE FLAGLER BUILDING
140 WEST FLAGLER STREET, SUITE 1603
MIAMI, FLORIDA 33130-1563
(305) 375-2901 FAX (305) 375-2908
www.buildingcodeonline.com

NOTICE OF ACCEPTANCE (NOA)

Alumiglass, Inc.
901 NW 35th Street, Suite 100
Boca Raton, FL 33431

SCOPE:

This NOA is being issued under the applicable rules and regulations governing the use of construction materials. The documentation submitted has been reviewed by Miami-Dade County Product Control Division and accepted by the Board of Rules and Appeals (BORA) to be used in Miami Dade County and other areas where allowed by the Authority Having Jurisdiction (AHJ).

This NOA shall not be valid after the expiration date stated below. The Miami-Dade County Product Control Division (In Miami Dade County) and/or the AHJ (in areas other than Miami Dade County) reserve the right to have this product or material tested for quality assurance purposes. If this product or material fails to perform in the accepted manner, the manufacturer will incur the expense of such testing and the AHJ may immediately revoke, modify, or suspend the use of such product or material within their jurisdiction. BORA reserves the right to revoke this acceptance, if it is determined by Miami-Dade County Product Control Division that this product or material fails to meet the requirements of the applicable building code.

This product is approved as described herein, and has been designed to comply with the Florida Building Code, including High Velocity Hurricane Zone of the Florida Building Code.

DESCRIPTION: Aluminum Structural Glazed Curtain Wall System -SMI

APPROVAL DOCUMENT: Drawing No. **05-ALU-0058** titled "Alumiwall Impact System (SMI)", sheets 1 through 8 of 8 dated 08/30/02 and last revised on 1/22/09, prepared by Engineering Express, signed and sealed by Frank L. Bennardo, P.E., bearing the Miami-Dade County Product Control Revision stamp with the Notice of Acceptance number and expiration date by the Miami-Dade County Product Control Division.

MISSILE IMPACT RATING: Large and Small Missile Impact Resistant

LABELING: Each unit shall bear a permanent label with the manufacturer's name or logo, city, state and following statement: "Miami-Dade County Product Control Approved", unless otherwise noted herein.

RENEWAL of this NOA shall be considered after a renewal application has been filed and there has been no change in the applicable building code negatively affecting the performance of this product.

TERMINATION of this NOA will occur after the expiration date or if there has been a revision or change in the materials, use, and/or manufacture of the product or process. Misuse of this NOA as an endorsement of any product, for sales, advertising or any other purposes shall automatically terminate this NOA. Failure to comply with any section of this NOA shall be cause for termination and removal of NOA.

ADVERTISEMENT: The NOA number preceded by the words Miami-Dade County, Florida, and followed by the expiration date may be displayed in advertising literature. If any portion of the NOA is displayed, then it shall be done in its entirety.

INSPECTION: A copy of this entire NOA shall be provided to the user by the manufacturer or its distributors and shall be available for inspection at the job site at the request of the Building Official.

This NOA **revises** NOA **# 07-0625.13** and consists of this page 1and evidence sheet E1, as well as approval document mentioned above.

The submitted documentation was reviewed by **Fitz A. Harris, P. E.**

Fitz A. Harris
2/4/09

MIAMI-DADE COUNTY APPROVED

NOA No 09-0128.10
Expiration Date: September 19, 2012
Approval Date: March 04, 2009

NOTICE OF ACCEPTANCE: EVIDENCE SUBMITTED

A. DRAWINGS (transferred from file # **02-0308.02)**

1. Manufacturer's die drawings and sections.
2. Drawing No. **05-ALU-0058** titled "Alumiwall Impact System (SMI)", sheets 1 through 8 of 8 dated 08/30/02 and last revised on 1/22/09, prepared by Engineering Express, signed and sealed by Frank L. Bennardo, P. E.

B. TESTS (Test reports transferred from file # **02-0308.02) original test report conducted per SFBC, PA 201, 202 & 203-94, now termed as FBC, TAS 201, 202 & 203-94.**

1. Test report on
   1) Air Infiltration Test, per PA 202-94
   2) Uniform Static Air Pressure Test, Loading per PA 202-94
   3) Water Resistance Test, per PA 202-94
   4) Large Missile Impact Test, SFBC PA 201-94
   5) Small Missile Impact Test, SFBC PA 201-94
   6) Cyclic Loading Test, per SFBC PA 203-94

along with installation diagram of an aluminum curtain wall system prepared by Hurricane Test Laboratory, Inc. Test Report No(s) : **HTL-0237-0708-00** dated 08/01/00, **HTL-0046-0702-00** dated 2/16-19/01, **HTL-0237-0312-01**, dated 3/09/01 and **HTL-0237-0704-01**, dated 7/5-9/01, all signed and sealed by Vinu J. Abraham, P.E.

C. CALCULATIONS

1. Anchor Calculations & structural analysis, dated 10/16/07 and last revised on 01-16-08, prepared by Engineering Express, signed & sealed by Frank L. Bennardo, P. E.
2. Glazing complies w/ ASTME-1300-02

D. QUALITY ASSURANCE

1. Miami Dade Building Code Compliance Office (BCCO).

E. MATERIAL CERTIFICATIONS

1. Notice of Acceptance No. **06-0216.06** issued to Solutia Inc. for their "**Saflex IIIG Clear or colored interlayer**"expiring on 05/21/2011.

F. **STATEMENTS**

1. Statement letter of conformance and "No financial interest", dated Sep. 14, 2005, issued by Frank L. Bennardo, P.E. consulting Engineers, signed & sealed by Frank L. Bennardo, P.E.
2. Statement letter of compliance by the Hurricane Testing labs, part of above referenced test reports.

F. OTHER

None

Fitz A. Harris, P. E.
Product Control Examiner
NOA No 09-0128.10
Expiration Date: September 19, 2012
Approval Date: March 04, 2009

METRO DADE COUNTY PRODUCT CONTROL CERTIFICATION DRAWINGS FOR

ALUMIWALL SMALL MISSILE IMPACT SYSTEM

GENERAL NOTES:

ARCHITECTURAL ALUMINUM: 6063–T5 ALLOY, U.O.N.

ALUMINUM FRAMING DETAILS ARE DESIGNED IN ACCORDANCE WITH THE 2007 FLORIDA BUILDING CODE.

CURTAINWALL FRAMING: ALUMIWALL 2 1/2" X 6" STRUCTURAL GLAZED SYSTEM
WITH 9/16" GLAZING AS MANUFACTURED BY ALUMIGLASS

SAFLEX BY SOLUTIA, INC.

GLASS : 9/16 TOTAL THICKNESS
9/16" HEAT STRENGTHENED LAMINATED:
1/4" HEAT STRENGTENED GLASS +
0.060 SOLUTIA SAFLEX PVB INTERLAYER +
1/4" HEAT STRENGTENED GLASS

NO 33–1/3% INCREASE IN ALLOWABLE STRESS HAS BEEN USED IN THE DESIGN OF THIS SYSTEM. WIND LOAD DURATION FACTOR Cd=1.6 HAS BEEN USED FOR WOOD ANCHOR DESIGN.

FRAMING TESTED IN ACCORDANCE WITH CURRENT ASTM STANDARDS AND CURRENT METRO DADE COUNTY PROTOCOLS: TAS201, TAS202, TAS203 & ASTM SPECIFICATIONS

ALUMINUM IN CONTACT WITH DISSIMILAR MATERIALS SHALL BE PROTECTED PER CODE.

FASTENERS TO BE CORROSIVE RESISTANT AS DETAILED HEREIN AND CONFORM TO SFBC DADE COUNTY.

STRUCTURAL SILICONE TO BE DOW CORNING 983.

PRODUCT REVISED
as complying with the Florida Building Code
Acceptance No 09-0128.10
Expiration Date 9-19-2012
By Fitz Harris
Miami Dade Product Control Division

FRANK L. BENNARDO, P.E.
PE0046549
01/22/2009

ENGINEERING EXPRESS®
160 SW 12th AVENUE, #106
DEERFIELD BEACH, FL 33442
PH: (954) 354-0660 FAX: (954) 354-0443
WWW.ENGEXP.COM
CERT OF AUTH #9885
A FRANK L. BENNARDO, P.E., INC. INNOVATION

LUMIGLASS, INC.
901 N.W. 35th Street, Suite 100 • Boca Raton, FL 33431
(561) 750-2300 • Fax: (561) 750-8711

ALUMIWALL IMPACT SYSTEM (SMI)

REMARKS	DRWN	CHKD	DATE
4 - 2004 FBC	AML	FLB	09/15/05
5 - BCCO COMMENTS	MEH	CL	09/13/07
6 - BCCO COMMENTS	KL	CL	12/14/07
7 - 2007 FBC	AML	CL	12/19/08
-	-	-	-

THIS DOCUMENT IS THE PROPERTY OF ENGINEERING EXPRESS AND SHALL NOT BE REPRODUCED IN WHOLE OR PART WITHOUT WRITTEN CONSENT OF THE CERTIFYING ENGINEER. ALTERATIONS, ADDITIONS, HIGHLIGHTING, OR OTHER MARKINGS TO THIS DOCUMENT ARE NOT PERMITTED AND INVALIDATE OUR CERTIFICATION.

COPYRIGHT ENGINEERING EXPRESS

05-ALU-0058
SCALE: 05
PAGE DESCRIPTION:
1 OF 9

01/22/2009 - 9:39am rbartlett F:\01 Project Files\Alumiglass (ALU)\2005 Jobs\05-ALU-0058 AlumiWall 6000, SMI (NOA)\05-ALU-0058_04a AlumiWall 6000, SMI (NOA).dwg

EXTRUSIONS

ALL EXTRUSIONS ALUMINUM ALLOY 6063-T5, U.O.N.

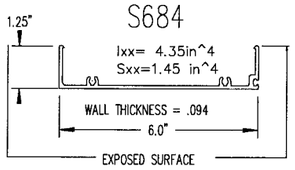

MALE INTERMED MULL

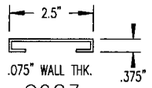

S683
CAP

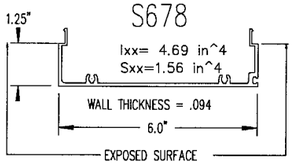

FEMALE INTERMED MULL

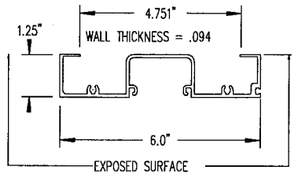

S1213
HEAD / SILL / JAMB

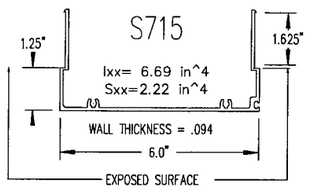

HORIZONTAL EXPANSION MULL

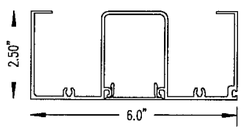

HEAD / SILL / JAMB
ALTERNATE FOR TX6116

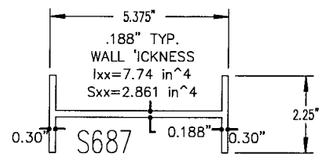

S687
MULL REINF. (6061-T6 ALUM.)

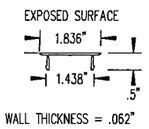

S1214
FILL FOR HEAD/SILL

ALUMINUM ALLOY 6063-T5

(2) #12 X 1" SMS TO JAMB SPLINE GROOVE, (4) TO HORIZ. MULL SPLINE GROOVE

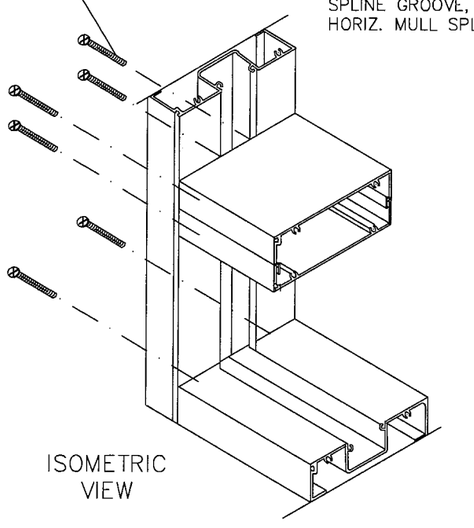

ISOMETRIC VIEW

ELEVATION

EXTERIOR VIEW, SCALE 1/4" = 1'

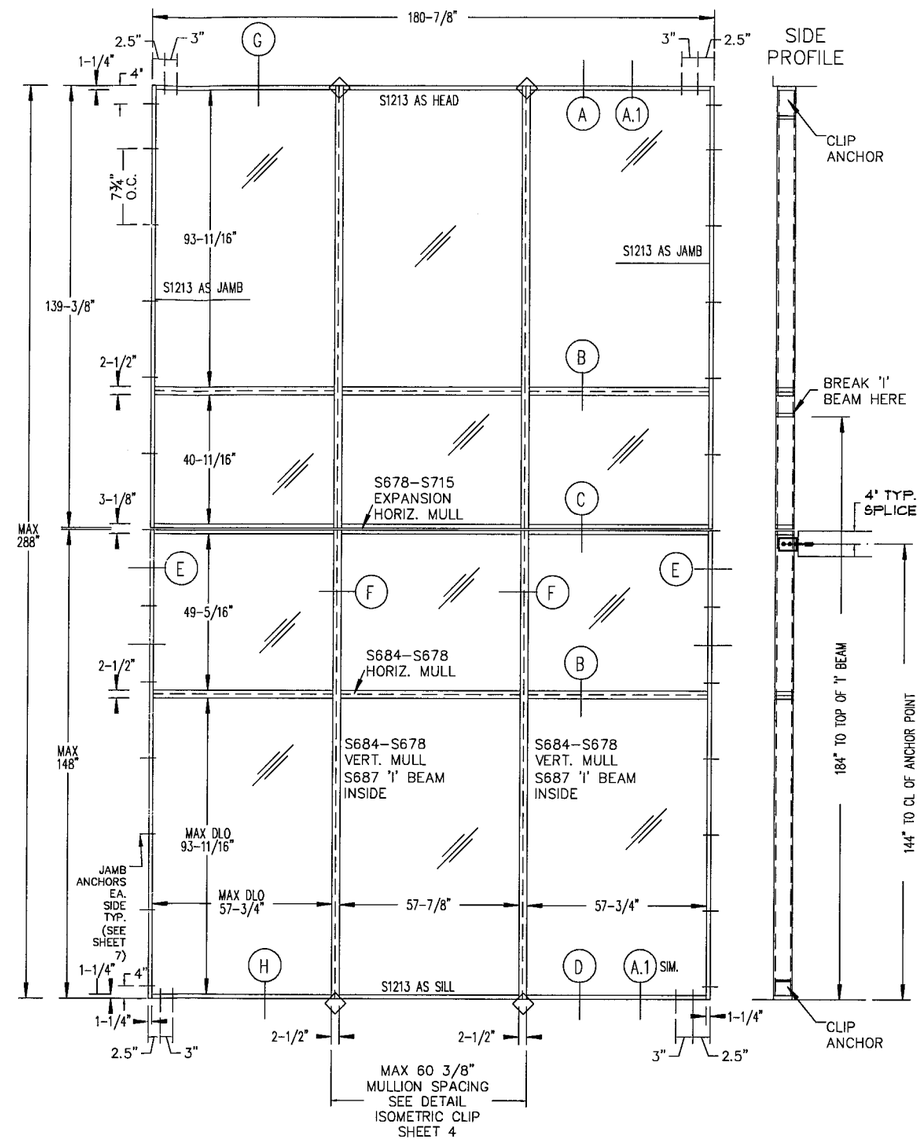

SMALL MISSILE GLAZING:
(ABOVE 30')
9/16" LAMINATED:
¼" HEAT STRENGTHENED
0.060" SOLUTIA SAFLEX PVB
¼" HEAT STRENGTHENED

FOR LARGE MISSILE IMPACT SEE SEPARATE NOA

DESIGN PRESSURE RATING
+90PSF, -90PSF

PRODUCT REVISED
as complying with the Florida Building Code
Acceptance No 09-0128-10
Expiration Date 9-19-2012
By Dirk Harris
Miami Dade Product Control Division

FRANK L. BENNARDO, P.E.
PE0046549
01/22/2009

ENGINEERING EXPRESS®
160 SW 12th AVENUE, #106
DEERFIELD BEACH, FL 33442
Ph: (954) 354-0660 Fax: (954) 354-0443
WWW.ENGEXP.COM
CERT OF AUTH #9885
A FRANK L. BENNARDO, P.E., INC. INNOVATION

LUMIGLASS, INC.
901 N.W. 35th Street, Suite 100 * Boca Raton, FL 33431
(561) 750-2300* Fax: (561) 750-8711

ALUMIWALL IMPACT SYSTEM (SMI)

REMARKS	DRWN	CHKD	DATE
4 - 2004 FBC	AML	FLB	09/15/05
5 - BCCO COMMENTS	MEH	CL	09/13/07
6 - BCCO COMMENTS	KL	CL	12/14/07
7 - 2007 FBC	AML	CL	12/19/08
	-	-	-

THIS DOCUMENT IS THE PROPERTY OF ENGINEERING EXPRESS AND SHALL NOT BE REPRODUCED IN WHOLE OR PART WITHOUT WRITTEN CONSENT OF THE ENGINEER. ENGINEER, ALTERATIONS, ADDITIONS, HIGHLIGHTING, OR OTHER MARKINGS TO THIS DOCUMENT ARE NOT PERMITTED AND INVALIDATE OUR CERTIFICATION.

COPYRIGHT ENGINEERING EXPRESS

05-ALU-0058

SCALE: 05

PAGE DESCRIPTION:

2 OF 9

01/22/2009 - 9:39am rbartlett F:\01 Project Files\Alumiglass (ALU)\2005 Jobs\05-ALU-0058 AlumiWall 6000, SMI (NOA)\05-ALU-0058_04a AlumiWall 6000, SMI (NOA).dwg

VERTICAL SECTIONS

1/2 SCALE

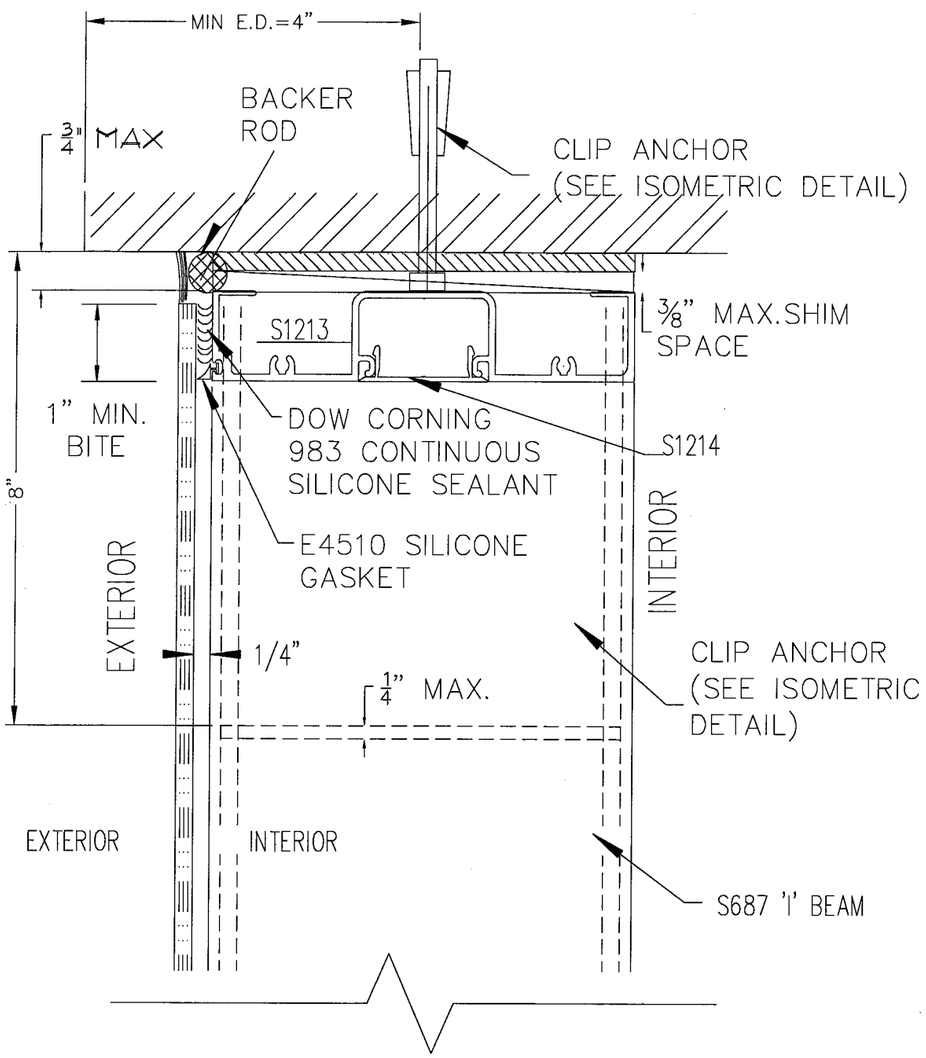

A

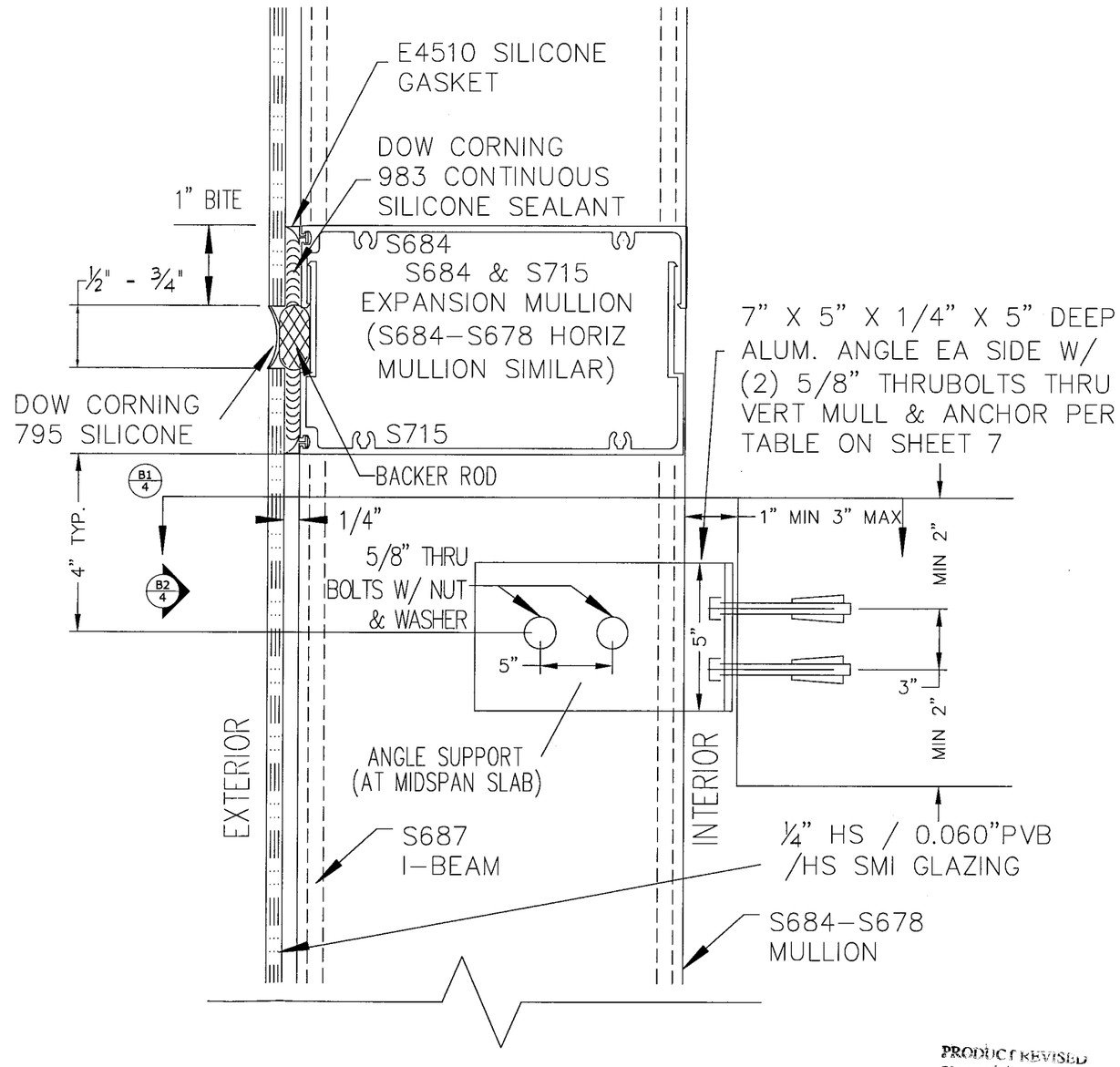

B C

PRODUCT REVISED
as complying with the Florida Building Code
Acceptance No 09-0128.10
Expiration Date 9-19-2012
By Judy Harris
Miami Dade Product Control Division

FRANK L. BENNARDO, P.E.
PE0046549
01/22/2009

ENGINEERING EXPRESS®
160 SW 12th AVENUE, #106
DEERFIELD BEACH, FL 33442
Ph: (954) 354-0660 Fax: (954) 354-0443
WWW.ENGEXP.COM
CERT OF AUTH #9885
A FRANK L. BENNARDO, P.E., INC. INNOVATION

LUMIGLASS, INC.
901 N.W. 35th Street, Suite 100 * Boca Raton, FL 33431
(561) 750-2300* Fax: (561) 750-8711

ALUMIWALL IMPACT SYSTEM (SMI)

REMARKS	DRWN	CHKD	DATE
4 - 2004 FBC	AML	FLB	09/15/05
5 - BCCO COMMENTS	MEH	CL	09/13/07
6 - BCCO COMMENTS	KL	CL	12/14/07
7 - 2007 FBC	AML	CL	12/19/08
-	-	-	-

THIS DOCUMENT IS THE PROPERTY OF ENGINEERING EXPRESS AND SHALL NOT BE REPRODUCED IN WHOLE OR PART WITHOUT WRITTEN CONSENT OF THE CERTIFYING ENGINEER. ATTACHED, ATTACHING, ATTACHED, OR OTHER MARKING TO THIS DOCUMENT, ARE NOT PERMITTED, NOR AFFIXED TO ANY OTHER DOCUMENT.

COPYRIGHT ENGINEERING EXPRESS

05-ALU-0058

SCALE: 05

PAGE DESCRIPTION:

3 OF 9

01/22/2009 - 9:39am rbartlett F:\01 Project Files\Alumiglass (ALU)\2005 Jobs\05-ALU-0058 AlumiWall 6000, SMI (NOA)\05-ALU-0058_04a AlumiWall 6000, SMI (NOA).dwg

HORIZONTAL SECTIONS @INTERMED MULLION CONNECTIONS

1/2 SCALE

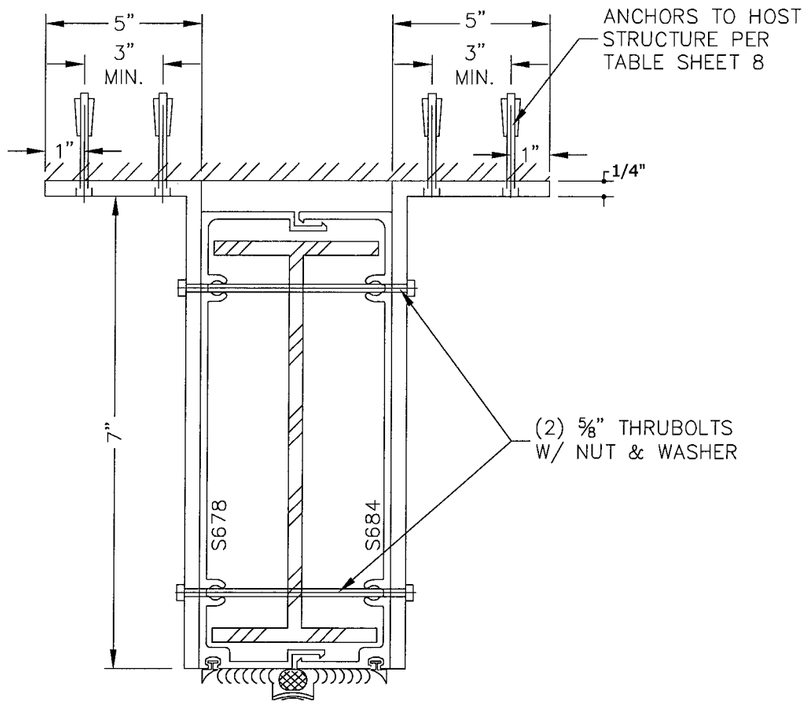

B1 HORIZONTAL SECTION
N.T.S.

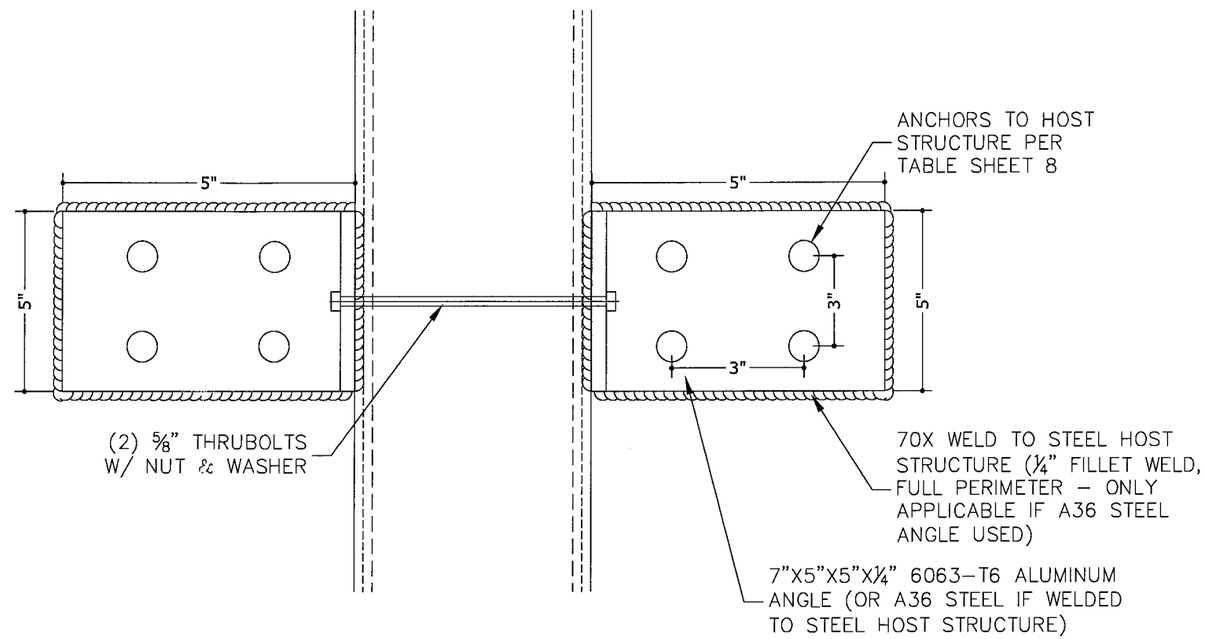

B2 EXTERIOR ELEVATION
N.T.S.

PRODUCT REVISED
as complying with the Florida Building Code
Acceptance No 09-0128.10
Expiration Date 9-19-2012
By [signature]
Miami Dade Product Control Division

FRANK L. BENNARDO, P.E.
PE0046549
01/22/2009

ENGINEERING EXPRESS®
160 SW 12th AVENUE, #106
DEERFIELD BEACH, FL 33442
PH: (954) 354-0660 FAX: (954) 354-0443
WWW.ENGEXP.COM
CERT OF AUTH #9885
A FRANK L. BENNARDO, P.E., INC. INNOVATION

LUMIGLASS, INC.
901 N.W. 35th Street, Suite 100 * Boca Raton, FL 33431
(561) 750-2300* Fax: (561) 750-8711

ALUMIWALL IMPACT SYSTEM (SMI)

REMARKS	DRWN	CHKD	DATE
4 - 2004 FBC	AML	FLB	09/15/05
5 - BCCO COMMENTS	MEH	CL	09/13/07
6 - BCCO COMMENTS	KL	CL	12/14/07
7 - 2007 FBC	AML	CL	12/19/08
-	-	-	-

THIS DOCUMENT IS THE PROPERTY OF ENGINEERING EXPRESS AND SHALL NOT BE REPRODUCED IN WHOLE OR PART WITHOUT WRITTEN CONSENT OF THE CERTIFYING ENGINEER. ALTERATIONS, ADDITIONS, HIGHLIGHTING, OR OTHER MARKINGS TO THIS DOCUMENT ARE NOT PERMITTED AND INVALIDATE OUR CERTIFICATION.

COPYRIGHT ENGINEERING EXPRESS

05-ALU-0058

SCALE: 05

PAGE DESCRIPTION:

4 OF 9

01/22/2009 - 9:39am rbartlett F:\01 Project Files\Alumiglass (ALU)\2005 Jobs\05-ALU-0058 AlumiWall 6000, SMI (NOA)\05-ALU-0058_04a AlumiWall 6000, SMI (NOA).dwg

HORIZONTAL SECTIONS

1/2 SCALE

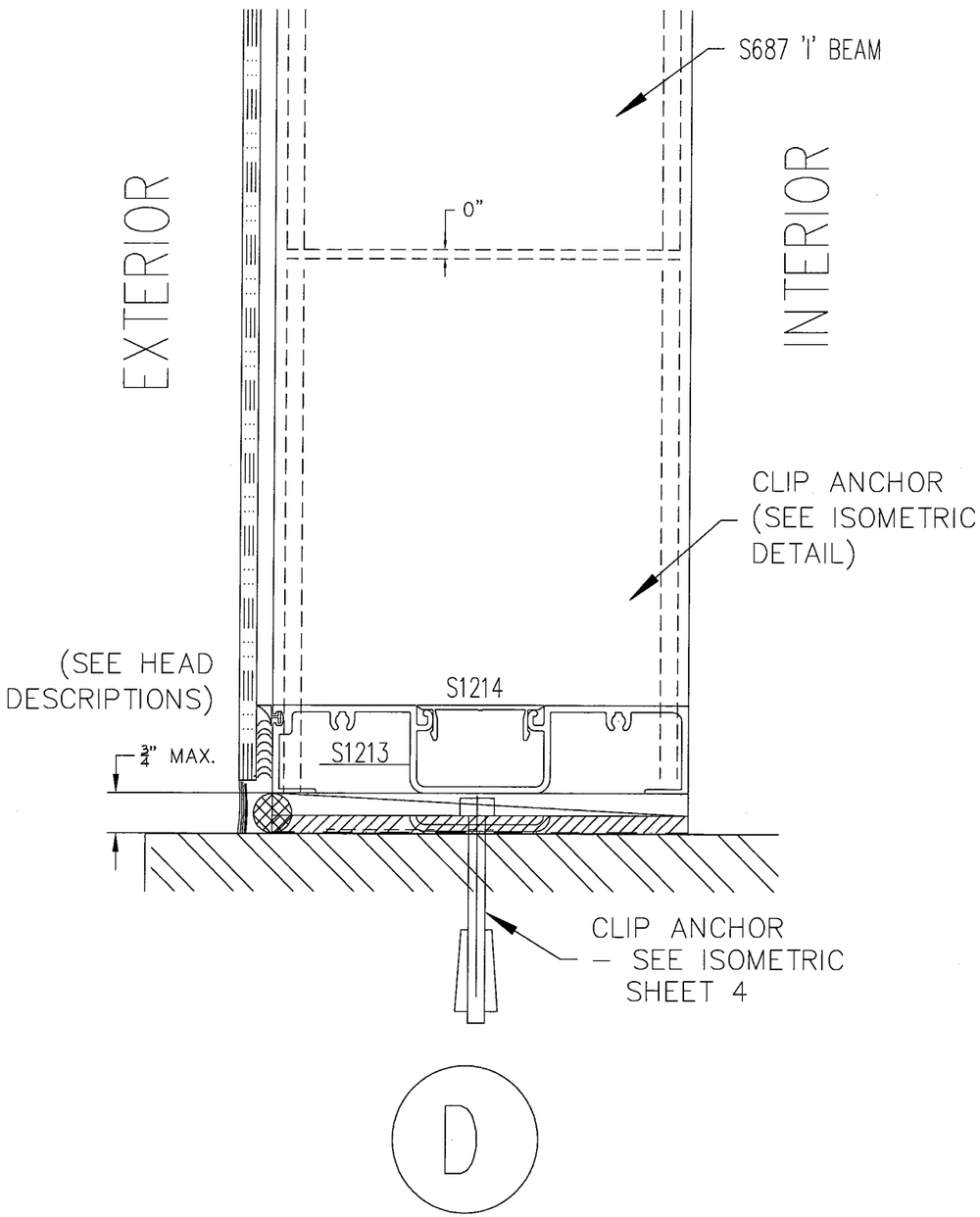

D

CLIP ANCHOR ISOMETRIC ◇

N.T.S. (AT HEAD & SILL TYP)

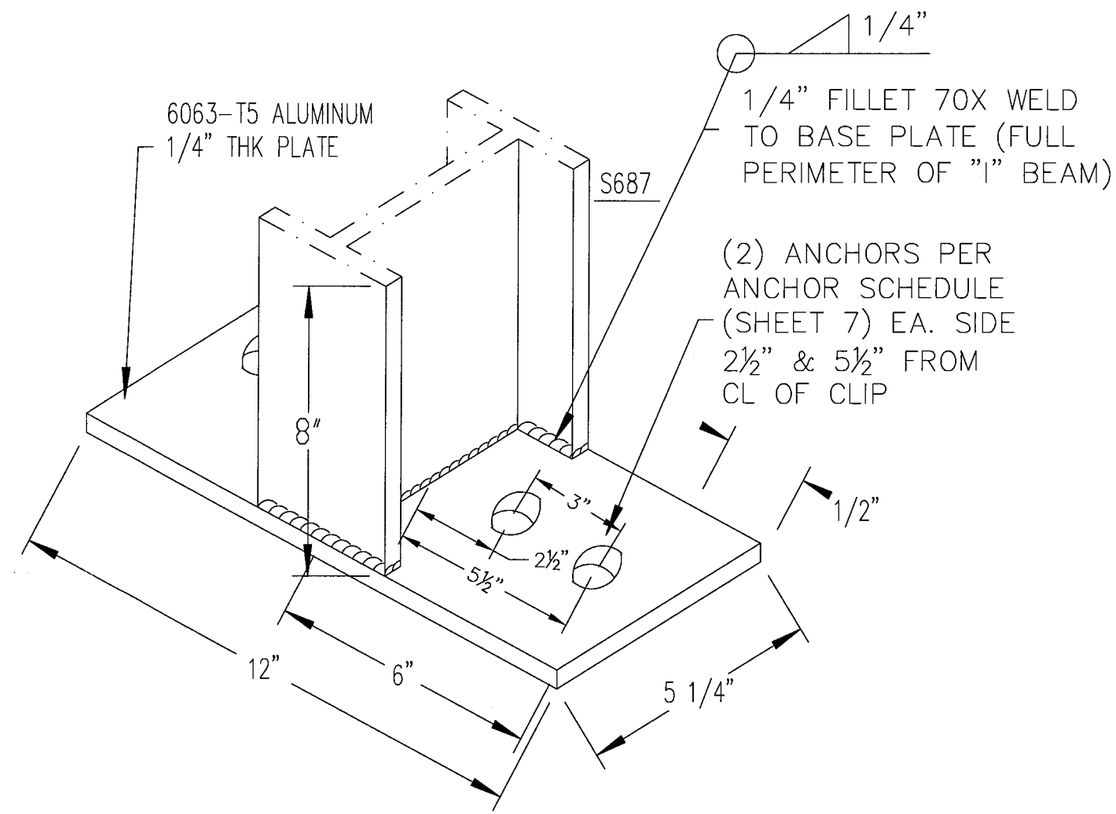

PRODUCT REVISED
as complying with the
Building Code
Acceptance No 09-0128.10
Expiration Date 9-19-2012
By Dirk Harris
Miami Dade Product Control
Division

FRANK L. BENNARDO, P.E.
PE0046549

01/22/2009

ENGINEERING EXPRESS®
160 SW 12th AVENUE, #106
DEERFIELD BEACH, FL 33442
PH: (954) 354-0660 FAX: (954) 354-0443
WWW.ENGEXP.COM
CERT OF AUTH #9885
A FRANK L. BENNARDO, P.E., INC. INNOVATION

LUMIGLASS, INC.
901 N.W. 35th Street, Suite 100 * Boca Raton, FL 33431
(561) 750-2300* Fax: (561) 750-8711

ALUMIWALL IMPACT SYSTEM (SMI)

REMARKS	DRWN	CHKD	DATE
4 - 2004 FBC	AML	FLB	09/15/05
5 - BCCO COMMENTS	MEH	CL	09/13/07
6 - BCCO COMMENTS	KL	CL	12/14/07
7 - 2007 FBC	AML	CL	12/19/08
-	-	-	-

THIS DOCUMENT IS THE PROPERTY OF ENGINEERING EXPRESS AND SHALL NOT BE REPRODUCED IN WHOLE OR PART WITHOUT WRITTEN CONSENT OF THE CERTIFYING ORGANIZATION. ALTERATIONS, ADDITIONS, HIGHLIGHTING, OR OTHER MARKINGS TO THIS DOC. ALTER ITS MEANING AND MAY BE ILLEGAL TO DO SO.
COPYRIGHT ENGINEERING EXPRESS

05-ALU-0058

SCALE: 05

PAGE DESCRIPTION:

5 OF 9

01/22/2009 - 9:39am rbartlett F:\01 Project Files\Alumiglass (ALU)\2005 Jobs\05-ALU-0058 AlumiWall 6000, SMI (NOA)\05-ALU-0058_04a AlumiWall 6000, SMI (NOA).dwg

TYPICAL HORIZONTAL SECTION

1/2 SCALE

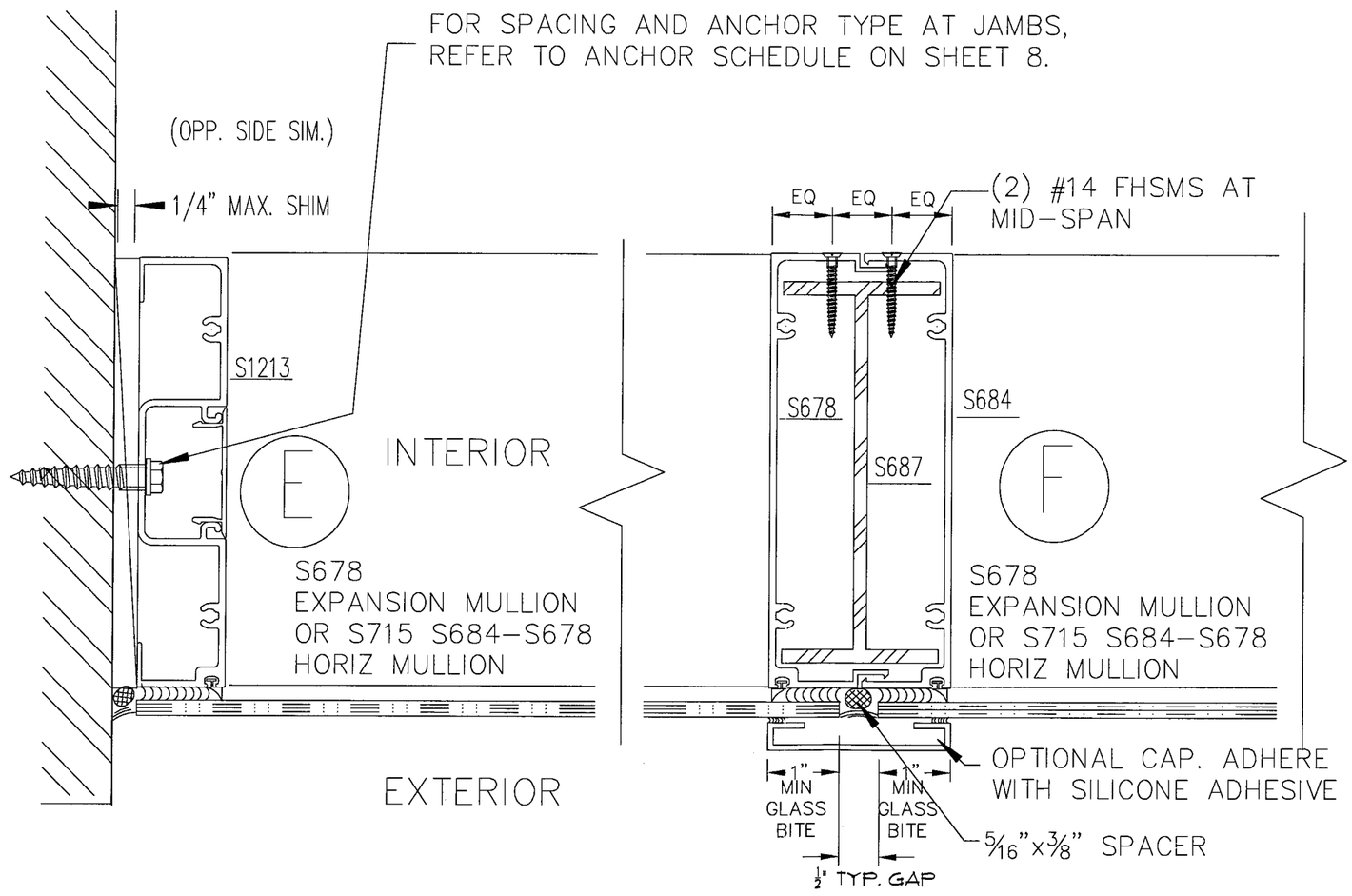

PRODUCT REVISED
as complying with the Florida Building Code
Acceptance No 09-0128-10
Expiration Date 9-19-2012
By [signature]
Miami Dade Product Control Division

FRANK L. BENNARDO, P.E.
PE0046549
01/22/2009

ENGINEERING EXPRESS®
160 SW 12th AVENUE, #106
DEERFIELD BEACH, FL 33442
PH: (954) 354-0660 FAX: (954) 354-0443
WWW.ENGEXP.COM
CERT OF AUTH #9885
A FRANK L. BENNARDO, P.E., INC. INNOVATION

LUMIGLASS, INC.
901 N.W. 35th Street, Suite 100 * Boca Raton, FL 33431
(561) 750-2300* Fax: (561) 750-8711

ALUMIWALL IMPACT SYSTEM (SMI)

REMARKS	DRWN	CHKD	DATE
4 - 2004 FBC	AML	FLB	09/15/05
5 - BCCO COMMENTS	MEH	CL	09/13/07
6 - BCCO COMMENTS	KL	CL	12/14/07
7 - 2007 FBC	AML	CL	12/19/08
-	-	-	-

THIS DOCUMENT IS THE PROPERTY OF ENGINEERING EXPRESS AND SHALL NOT BE REPRODUCED IN WHOLE OR PART WITHOUT WRITTEN CONSENT OF THE CERTIFYING ENGINEER. ALTERATIONS, ADDITIONS, HIGHLIGHTING, OR OTHER MARKINGS TO THIS DOCUMENT ARE NOT PERMITTED AND INVALIDATE OUR CERTIFICATION.

COPYRIGHT ENGINEERING EXPRESS

05-ALU-0058

SCALE: 05

PAGE DESCRIPTION:

6 OF 9

01/22/2009 - 9:39am rbartlett F:\01 Project Files\Alumiglass (ALU)\2005 Jobs\05-ALU-0058 AlumiWall 6000, SMI (NOA)\05-ALU-0058_04a AlumiWall 6000, SMI (NOA).dwg

HEAD/SILL ANCHORS @ CURTAIN WALL RIBBON APPLICATION AND PUNCHED-OPENING (VERTICAL SECTIONS)

1/2 SCALE

G

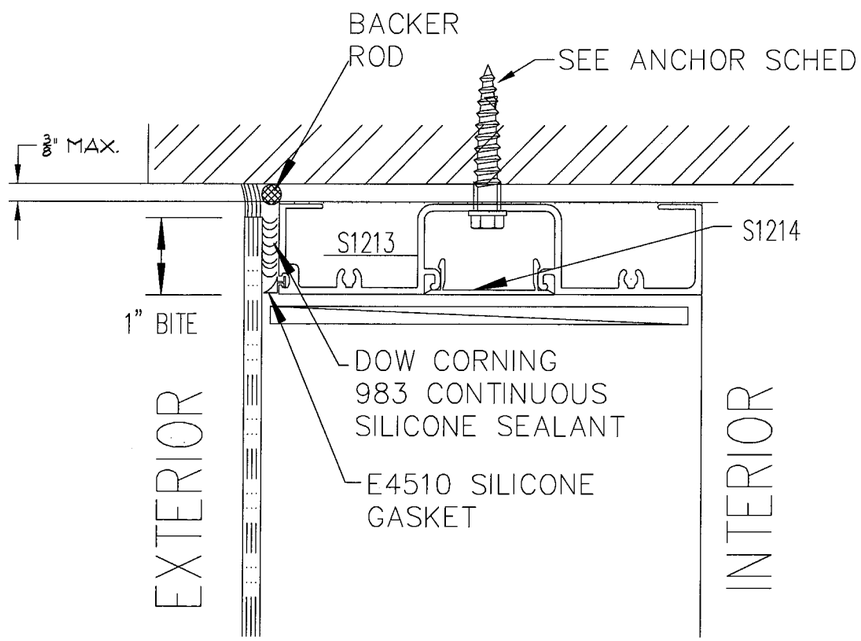

H

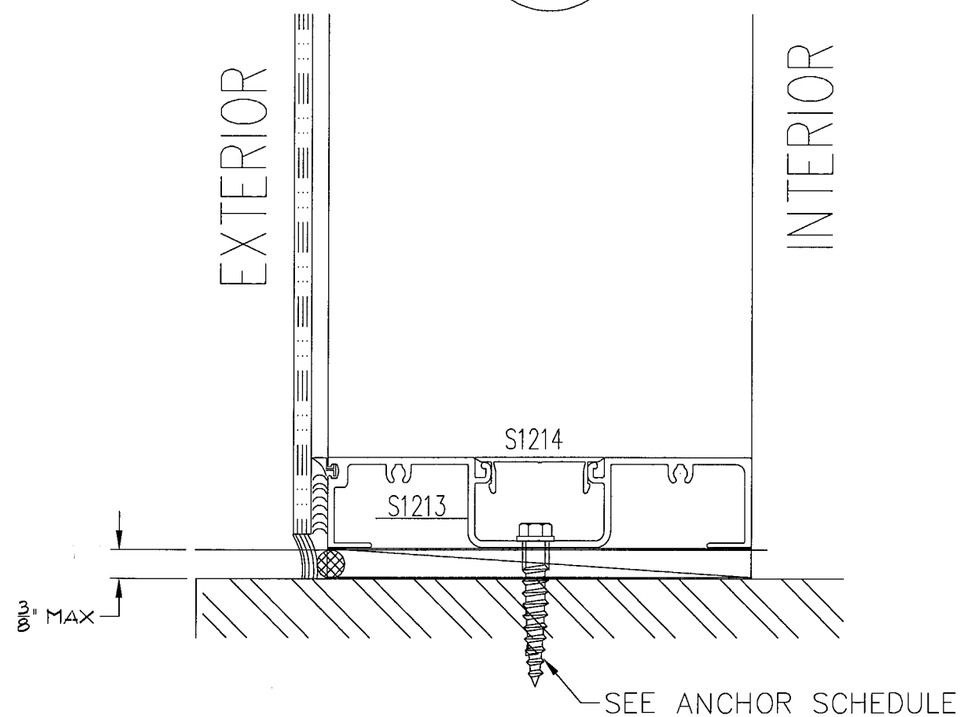

GLAZING DETAIL

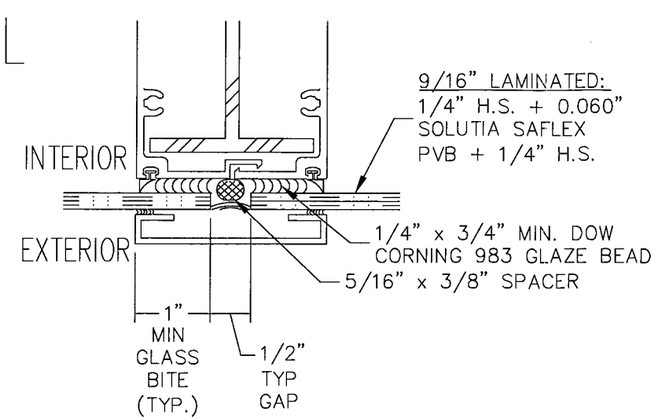

PRODUCT REVISED
as complying with the Florida Building Code
Acceptance No 09-0128.10
Expiration Date 9-19-2012
By Miami Dade Product Control Division

FRANK L. BENNARDO, P.E.
PE0046549
01/22/2009

ENGINEERING EXPRESS®
160 SW 12th AVENUE, #106
DEERFIELD BEACH, FL 33442
PH: (954) 354-0660 FAX: (954) 354-0443
WWW.ENGEXP.COM
CERT OF AUTH #9885
A FRANK L. BENNARDO, P.E., INC. INNOVATION

LUMIGLASS, INC.
901 N.W. 35th Street, Suite 100 * Boca Raton, FL 33431
(561) 750-2300* Fax: (561) 750-8711

ALUMIWALL IMPACT SYSTEM (SMI)

REMARKS	DRWN	CHKD	DATE
4 - 2004 FBC	AML	FLB	09/15/05
5 - BCCO COMMENTS	MEH	CL	09/13/07
6 - BCCO COMMENTS	KL	CL	12/14/07
7 - 2007 FBC	AML	CL	12/19/08
-	-	-	-

THIS DOCUMENT IS THE PROPERTY OF ENGINEERING EXPRESS AND SHALL NOT BE REPRODUCED IN WHOLE OR PART WITHOUT WRITTEN CONSENT OF THE CERTIFYING ENGINEER. ALTERATIONS, ADDITIONS, HIGH LIGHTING, OR OTHER MARKINGS TO THIS DOCUMENT ARE NOT ENTITLED TO BE ACCEPTED AS A SEAL.

COPYRIGHT ENGINEERING EXPRESS

05-ALU-0058

SCALE: 05

PAGE DESCRIPTION:

7 OF 9

01/22/2009 - 9:39am rbartlett F:\01 Project Files\Alumiglass (ALU)\2005 Jobs\05-ALU-0058 AlumiWall 6000, SMI (NOA)\05-ALU-0058_04a AlumiWall 6000, SMI (NOA).dwg

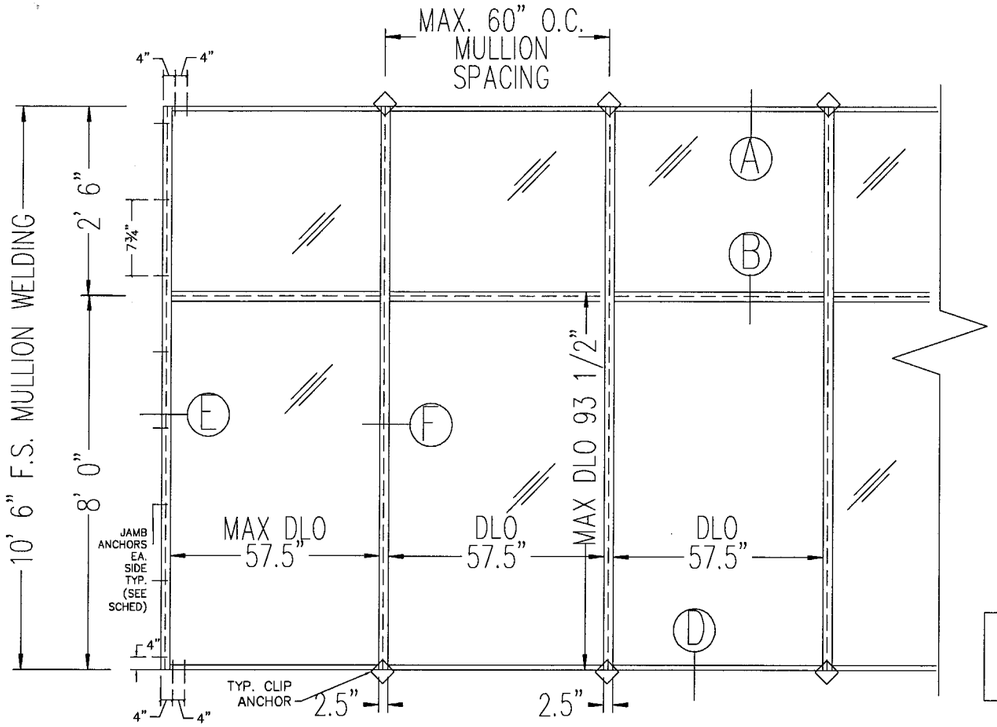

TYPICAL MAXIMUM DIMENSION RIBBON APPLICATION
1/4" = 1'

SMALL MISSILE GLAZING:
(ABOVE 30')
9/16" LAMINATED:
¼" HEAT STRENGTHENED
0.060" SAFLEX PVB
BY SOLUTIA
¼" HEAT STRENGTHENED

FOR LARGE MISSILE IMPACT
SEE SEPARATE NOA

DESIGN PRESSURE RATING
+90PSF, −90PSF

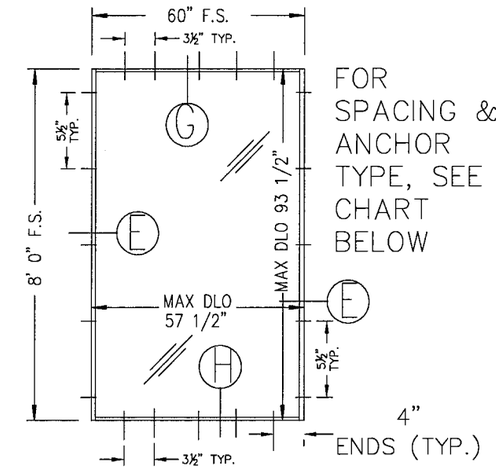

FOR SPACING & ANCHOR TYPE, SEE CHART BELOW

SINGLE FIXED UNITS
TYPICAL MAXIMUM DIMENSION
PUNCHED OPENING APPLICATION
1/4" = 1'

CURTAINWALL AND RIBBON APPLICATION ANCHOR SCHEDULE

CONNECTION AT: SUBSTRATE	JAMB	◇ HEADER/SILL CLIP	INTERMED FLOOR SLAB ANCHORAT MULLION (CURTAINWALL APPLICATIONS ONLY)
CONCRETE (MIN. 4000 PSI)	ELCO 1/4" x 1 3/4" EMBED TAPCON 4" FROM EA HORIZONTAL MULLION END, BALANCE 7 3/4" O.C. MAXIMUM 3" CLEAR FROM ANY CONCRETE FACE	(2) HILTI 3/8" x 3" EMBED KWIK BOLT III ANCHORS OR 3/8" POWERS WEDGE BOLT x 2 1/2" EMBED EA. SIDE 2 1/2" & 5 1/2" FROM C/L OF MULLION CLIP TOTAL (4). ADD HILTI 3/8" x 2 1/2" EMBED KWIK BOLT III OR POWERS WEDGE BOLT 3/8" x 2 1/2" EMBED AT 2 1/2"& 5 1/2" FROM JAMB ENDS (NO CLIP AT JAMB ENDS)	7" X 5" X 1/4" X 5" DEEP ALUM. ANGLE EA SIDE W/ (2) 5/8-11 THRUBOLTS THRU VERT MULL & (4) HILTI 3/8" x 3 1/2" EMBED KWIK BOLT III ANCHORS OR POWERS WEDGE BOLT 3/8" x 3" EMBED TO CONC EA. ANGLE 3" CLR FROM CONCRETE FACE.
CONC BLOCK	ELCO 1/4" x 1 1/4" EMBED TAPCON 4" FROM EA HORIZONTAL MULLION END, BALANCE 7 3/4" O.C. MAXIMUM 3" CLEAR FROM ANY CONCRETE FACE	N / A	CONCRETE SLAB OR STEEL STRUCTURE CONNECTION REQUIRED
STEEL (MIN. SUBSTRATE THICKNESS=1/4")	1/4-20 SAE GRADE 5 STEEL THRUBOLT 4" FROM EA HORIZONTAL MULLION END, BALANCE 7 3/4" O.C. MAXIMUM	3/8-16 SAE GRADE 5 STEEL THRUBOLTS EA. SIDE, 2 1/2" & 5 1/2" FROM C/L OF MULLION CLIP TOTAL (4). ADD 3/8" THRUBOLTS AT 2 1/2" & 5 1/2" FROM JAMB ENDS (NO CLIP AT JAMB ENDS)	7" X 4" X 1/4" X 5" DEEP STEEL ANGLE EA SIDE W/ (2) 5/8-11 THRUBOLTS THRU VERT MULL & 1/4" FULL FILLET WELD TO A36 STEEL SUPPORT
WOOD (G=0.55 MIN.)	#14 x 1 1/2" EMBED GRADE 5 WOOD SCREW 4" FROM EA HORIZONTAL MULLION END, BALANCE 7 3/4" O.C. MAX, 1" MIN. EDGE DISTANCE	3/4" x 7" LAG SCREW (3 1/2" THREAD EMBED) EA. SIDE. 2 1/2" & 5 1/2" FROM C/L OF MULLION CLIP TOTAL (4). ADD 3/4" LAG BOLTS AT 2 1/2" & 5 1/2" FROM JAMB ENDS, 2½" MIN. EDGE DISTANCE (NO CLIP AT JAMB ENDS)	CONCRETE SLAB OR STEEL STRUCTURE CONNECTION REQUIRED

PUNCHED OPENING ANCHORS

JAMB	HEADER/SILL
ELCO 1/4" x 1 3/4" EMBED TAPCON 4" FROM EA END, BALANCE 5 1/2" O.C. MAXIMUM, 3" CLEAR FROM ANY CONCRETE FACE	ELCO 1/4" x 1 3/4" EMBED TAPCON 4" FROM EA END, BALANCE 3 1/2" O.C. MAXIMUM, 3" CLEAR FROM ANY CONCRETE FACE
ELCO 1/4" x 1 1/4" EMBED TAPCON 4" FROM EA END, BALANCE 5 1/2" O.C. MAXIMUM, 3" CLEAR FROM ANY CONCRETE FACE	ELCO 1/4" x 1 1/4" EMBED TAPCON 4" FROM EA END, BALANCE 3 1/2" O.C. MAXIMUM, 3" CLEAR FROM ANY CONCRETE FACE
1/4-20 SAE GRADE 2 STEEL THRUBOLT 4" FROM EA END, BALANCE 5 1/2" O.C. MAXIMUM	1/4-20 SAE GRADE 2 STEEL SCREW 4" FROM EA END, BALANCE 3 1/2" O.C. MAXIMUM
#14 x 1 1/2" EMBED GRADE 2 WOOD SCREW 4" FROM EA END, BALANCE 5 1/2" O.C. MAX	#14 x 1 1/2" EMBED GRADE 2 WOOD SCREW 4" FROM EA END, BALANCE 3 1/2" O.C. MAX

ANCHOR NOTES:

1. ANCHORS SHALL BE INSTALLED IN ACCORDANCE WITH MANUFACTURERS' RECOMMENDATIONS.
2. TAPCONS MAY BE MANUFACTURED BY ELCO OR ITW.
3. WOOD HOST STRUCTURE SHALL BE "SOUTHERN PINE" G=0.55 OR GREATER DENSITY.
4. MINIMUM EMBEDMENT SHALL BE AS NOTED IN ANCHOR SCHEDULE. MINIMUM EMBEDMENT AND EDGE DISTANCE EXCLUDES STUCCO, FOAM, BRICK, AND OTHER WALL FINISHES.
5. WHERE EXISTING STRUCTURE IS WOOD FRAMING, EXISTING CONDITIONS MAY VARY. FIELD VERIFY THAT FASTENERS ARE INTO ADEQUATE WOOD FRAMING MEMBERS, NOT INTO PLYWOOD.
6. WOOD BUCKS (BY OTHERS) SHALL BE ANCHORED PROPERLY TO TRANSFER LOADS TO THE EXISTING STRUCTURE.
7. MACHINE SCREWS SHALL BE INSTALLED WITH FULL ENGAGEMENT OF THREADS INTO METAL HOST STRUCTURE AND MAY HAVE EITHER A FLAT HEAD, PAN HEAD, TRUSS HEAD, OR OTHER HEAD STYLES.

PRODUCT REVISED
as complying with the Florida Building Code
Acceptance No 08-0128.10
Expiration Date 9-19-2012
By Otto Harris
Miami Dade Product Control Division

FRANK L. BENNARDO, P.E.
PE0046549
01/22/2009

ENGINEERING EXPRESS®
160 SW 12th AVENUE, #106
DEERFIELD BEACH, FL 33442
PH: (954) 354-0660 FAX: (954) 354-0443
WWW.ENGEXP.COM
CERT OF AUTH #9885
A FRANK L. BENNARDO, P.E., INC. INNOVATION

LUMIGLASS, INC.
861 N.W. 36th Street, Suite 160 • Boca Raton, FL 33431
(561) 750-2300 Fax: (561) 750-8711

ALUMIWALL IMPACT SYSTEM (SMI)

REMARKS	DRWN	CHKD	DATE
4 - 2004 FBC	AML	FLB	09/15/06
5 - BCCO COMMENTS	MEH	CL	09/13/07
6 - BCCO COMMENTS	KL	CL	12/14/07
7 - 2007 FBC	AML	CL	12/19/08
-	-	-	-
-	-	-	-

THIS DOCUMENT IS THE PROPERTY OF ENGINEERING EXPRESS AND SHALL NOT BE REPRODUCED IN WHOLE OR PART WITHOUT WRITTEN CONSENT OF THE CERTIFYING ENGINEER. ANY REVISIONS MADE TO THIS DOCUMENT WITHOUT THE CONSENT OF THE CERTIFYING ENGINEER ARE NOT PERMITTED AND INVALIDATE OUR CERTIFICATION.

COPYRIGHT ENGINEERING EXPRESS

05-ALU-0058
SCALE: 05
PAGE DESCRIPTION:

8 OF 9

01/22/2009 - 9:39am rbartlett F:\01 Project Files\Alumiglass (ALU)\2005 Jobs\05-ALU-0058 AlumiWall 6000, SMI (NOA)\05-ALU-0058_04a AlumiWall 6000, SMI (NOA).dwg

ALTERNATE HEAD/SILL SECTION

1/2 SCALE

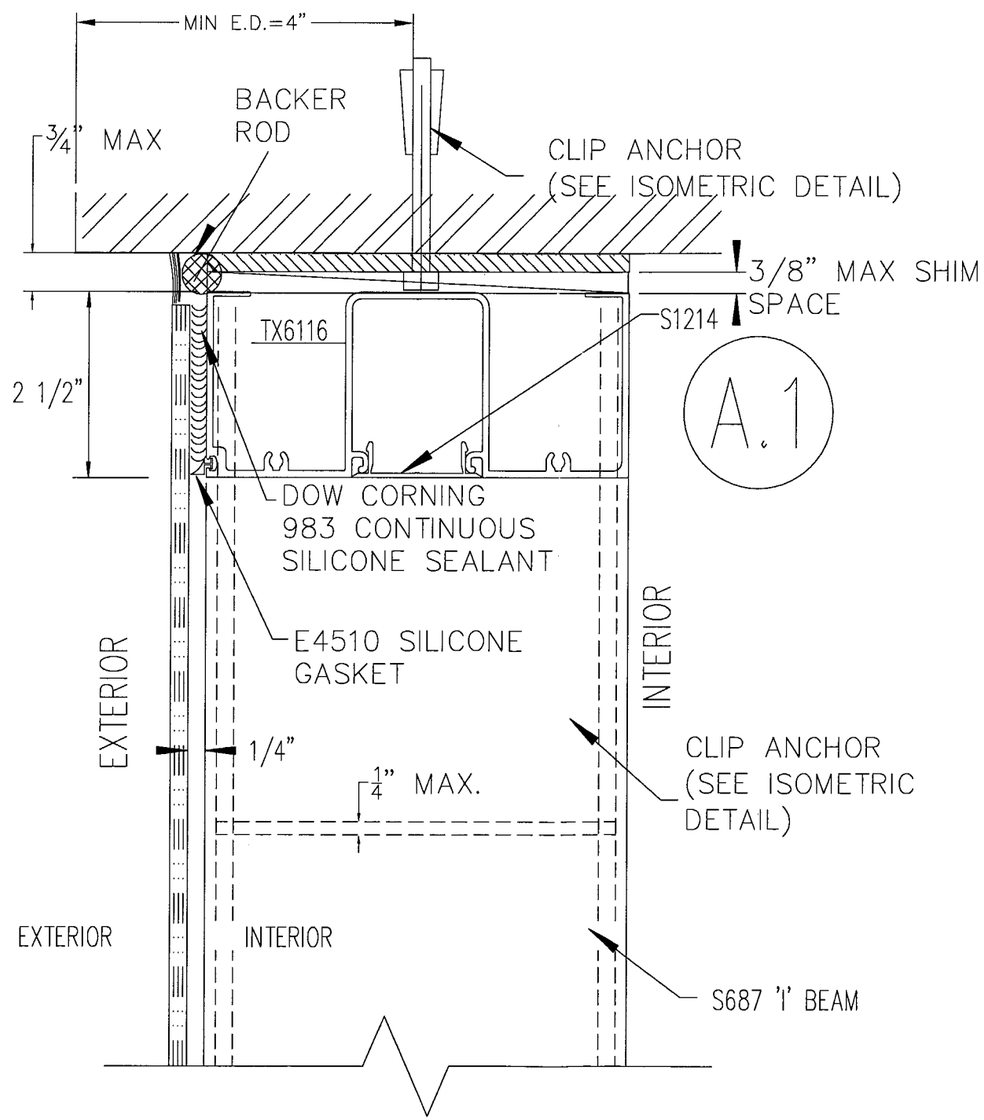

PRODUCT REVISED
as complying with the Florida
Building Code
Acceptance No 09-0128.10
Expiration Date 9-19-2012

By Judy Harris
Miami Dade Product Control
Division

FRANK L. BENNARDO, P.E.
PE0046549

01/22/2009

ENGINEERING EXPRESS®
160 SW 12th AVENUE, #106
DEERFIELD BEACH, FL 33442
PH: (954) 354-0660 FAX: (954) 354-0443
WWW.ENGEXP.COM
CERT OF AUTH #9985
A FRANK L. BENNARDO, P.E., INC. INNOVATION

LUMIGLASS, INC.
901 N.W. 35th Street, Suite 100 * Boca Raton, FL 33431
(561) 750-2300* Fax: (561) 750-8711

ALUMIWALL IMPACT SYSTEM (SMI)

REMARKS	DRWN	CHKD	DATE
4 - 2004 FBC	AML	FLB	09/15/05
5 - BCCO COMMENTS	MEH	CL	09/13/07
6 - BCCO COMMENTS	KL	CL	12/14/07
7 - 2007 FBC	AML	CL	12/19/08
-	-	-	-

THIS DOCUMENT IS THE PROPERTY OF ENGINEERING EXPRESS AND SHALL NOT BE REPRODUCED IN WHOLE OR PART WITHOUT WRITTEN CONSENT OF THE CERTIFYING ENGINEER. ALTERATIONS, ADDITIONS, HIGHLIGHTING, OR OTHER MARKINGS TO THIS DOCUMENT ARE NOT PERMITTED AND SHALL INVALIDATE CERTIFICATION.

COPYRIGHT ENGINEERING EXPRESS

05-ALU-0058

SCALE: 05

PAGE DESCRIPTION:

9 OF 9

01/22/2009 - 9:39am rbartlett F:\01 Project Files\Alumiglass (ALU)\2005 Jobs\05-ALU-0058 AlumiWall 6000, SMI (NOA)\05-ALU-0058_04a AlumiWall 6000, SMI (NOA).dwg