MIAMI-DADE COUNTY
BUILDING CODE COMPLIANCE OFFICE (BCCO)
PRODUCT CONTROL DIVISION

**MIAMI-DADE** COUNTY, FLORIDA
METRO-DADE FLAGLER BUILDING
**140 WEST FLAGLER STREET, SUITE 1603**
MIAMI, FLORIDA 33130-1563
(305) 375-2901 FAX (305) 372-6339
**www.miamidade.gov/buildingcode**

# NOTICE OF ACCEPTANCE (NOA)

**Kolbe & Kolbe Millwork Company**
**1211 Depot Street**
**Manawa, WI 54949**

**SCOPE:**

This NOA is being issued under the applicable rules and regulations governing the use of construction materials. The documentation submitted has been reviewed by Miami-Dade County Product Control Division and accepted by the Board of Rules and Appeals (BORA) to be used in Miami Dade County and other areas where allowed by the Authority Having Jurisdiction (AHJ).

This NOA shall not be valid after the expiration date stated below. The Miami-Dade County Product Control Division (In Miami Dade County) and/or the AHJ (in areas other than Miami Dade County) reserve the right to have this product or material tested for quality assurance purposes. If this product or material fails to perform in the accepted manner, the manufacturer will incur the expense of such testing and the AHJ may immediately revoke, modify, or suspend the use of such product or material within their jurisdiction. BORA reserves the right to revoke this acceptance, if it is determined by Miami-Dade County Product Control Division that this product or material fails to meet the requirements of the applicable building code. This product is approved as described herein, and has been designed to comply with the Florida Building Code, including the High Velocity Hurricane Zone.

**DESCRIPTION: Series "V707" Extruded Aluminum Mullion – L.M.I.**

**APPROVAL DOCUMENT:** Drawing No. **08-00657**, titled "V707 Impact Mullion – "T" and Vertical", sheets 1 through 5 of 5, dated 12/03/08, with revision A dated 08/03/09, prepared by manufacturer, signed and sealed by Luis R. Lomas, P.E., bearing the Miami-Dade County Product Control Approval stamp with the Notice of Acceptance number and approval date by the Miami-Dade County Product Control Division.

**MISSILE IMPACT RATING: Large and Small Missile Impact Resistant**

**LABELING:** Each unit shall bear a permanent label with the manufacturer's name or logo, city, state and following statement: "Miami-Dade County Product Control Approved", unless otherwise noted herein.

**RENEWAL** of this NOA shall be considered after a renewal application has been filed and there has been no change in the applicable building code negatively affecting the performance of this product.

**TERMINATION** of this NOA will occur after the expiration date or if there has been a revision or change in the materials, use, and/or manufacture of the product or process. Misuse of this NOA as an endorsement of any product, for sales, advertising or any other purposes shall automatically terminate this NOA. Failure to comply with any section of this NOA shall be cause for termination and removal of NOA.

**ADVERTISEMENT:** The NOA number preceded by the words Miami-Dade County, Florida, and followed by the expiration date may be displayed in advertising literature. If any portion of the NOA is displayed, then it shall be done in its entirety.

**INSPECTION:** A copy of this entire NOA shall be provided to the user by the manufacturer or its distributors and shall be available for inspection at the job site at the request of the Building Official.

This NOA and consists of this page 1 and evidence pages E-1 and E-2, as well as approval document mentioned above.

The submitted documentation was reviewed by **Manuel Perez, P.E.**

MIAMI-DADE COUNTY APPROVED

**Kolbe & Kolbe Millwork Company**

## NOTICE OF ACCEPTANCE: EVIDENCE SUBMITTED

### A. DRAWINGS

1. Manufacturer's die drawings and sections.
2. Drawing No **08-00657**, Sheets 1 through 5 of 5, titled "V707 Impact Mullion "T" and Vertical", dated 12/03/08, with revision A dated 08/03/09, prepared by manufacturer, signed and sealed by Luis R. Lomas, P.E.

### B. TESTS

1. Test reports on: 1) Air Infiltration Test, per FBC, TAS 202-94
   2) Uniform Static Air Pressure Test, Loading per FBC TAS 202-94
   3) Water Resistance Test, per FBC, TAS 202-94
   4) Large Missile Impact Test per FBC, TAS 201-94
   5) Cyclic Wind Pressure Loading per FBC, TAS 203-94
   6) Forced Entry Test, per FBC 2411 3.2.1, TAS 202-94

   along with marked-up drawings and installation diagram of series V707 impact mullion with O/X/X-O/X/X configuration fixed/double hung window combination vinyl prime windows mulled together, prepared by National Certified Testing Laboratories, Test Report No. **NCTL-110-10633-25**, dated 02/16/07, signed and sealed by Harold E. Rupp, P.E.
2. Test reports on: 1) Air Infiltration Test,
   2) Uniform Static Air Pressure Test,
   3) Water Resistance Test,
   4) Large Missile Impact Test per FBC, TAS 201-94
   5) Cyclic Wind Pressure Loading per FBC, TAS 203-94
   6) Forced Entry Test, per FBC 2411 3.2.1, TAS 202-94

   along with marked-up drawings and installation diagram of series V707 impact mullion with O/X/X-O/X/X configuration fixed/double hung window combination vinyl prime windows mulled together, prepared by National Certified Testing Laboratories, Test Report No. **NCTL-110-10633-28**, dated 12/08/06, signed and sealed by Harold E. Rupp, P.E.

### C. CALCULATIONS

1. Anchor verification calculations and structural analysis, complying with FBC-2007, dated 12/08/08, prepared, signed and sealed by Luis R. Lomas, P.E.

### D. QUALITY ASSURANCE

1. Miami Dade Building Code Compliance Office (BCCO).

Manuel Perez

**Manuel Perez, P.E.**
**Product Control Examiner**
**NOA No. 09-0203.08**
**Expiration Date: October 07, 2014**
**Approval Date: October 07, 2009**

## NOTICE OF ACCEPTANCE: EVIDENCE SUBMITTED

### E. MATERIAL CERTIFICATIONS

1. Notice of Acceptance No. **08–0620.09**, issued to Thermoplast for their "White Rigid PVC Exterior Profile Extrusions for Windows and Doors", approved on 08/07/08 and expiring on 07/05/12.

### F. STATEMENTS

1. Statement letter of conformance and of no financial interest, dated December 17, 2008, signed and sealed by Luis R. Lomas, P.E.

### G. OTHERS

1. None.

**Manuel Perez, P.E.**
**Product Control Examiner**
**NOA No. 09-0203.08**
**Expiration Date: October 07, 2014**
**Approval Date: October 07, 2009**

| REVISIONS | | | |
|---|---|---|---|
| REV | DESCRIPTION | DATE | APPROVED |
| A | PER DADE LETTER DATED JULY 16, 09 | 08/03/09 | R.L. |

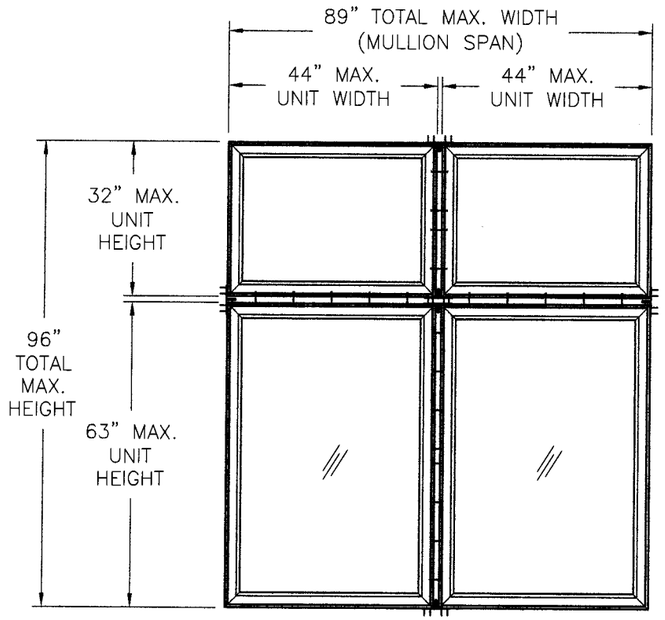


*V707 T IMPACT MULLION*

*EXTERIOR VIEW*

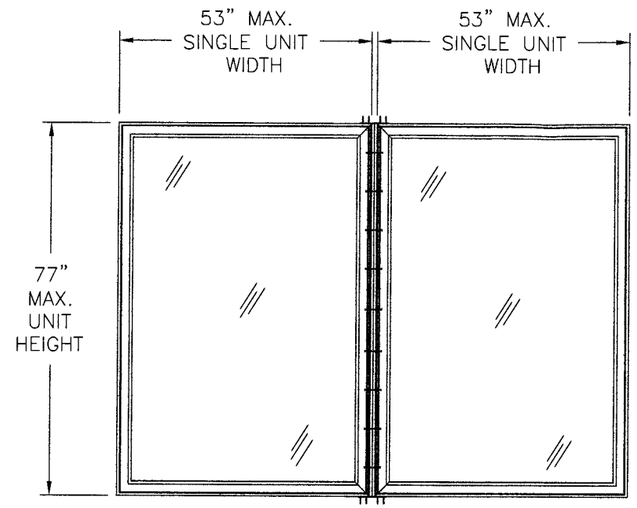


*V707 IMPACT MULLION*

*SEE NOTES 11 AND 12 FOR APPROVED CONFIGURATIONS*

*EXTERIOR VIEW*

| DESIGN PRESSURE RATING | IMPACT RATING |
|---|---|
| ± 70.0 PSF | LARGE AND SMALL MISSILE IMPACT |

NOTES:

1) THE PRODUCT SHOWN HEREIN IS DESIGNED AND MANUFACTURED TO COMPLY WITH REQUIREMENTS OF THE FLORIDA BUILDING CODE INCLUDING THE HVHZ.
2) WOOD FRAMING AND MASONRY OPENING TO BE DESIGNED AND ANCHORED TO PROPERLY TRANSFER ALL LOADS TO STRUCTURE. FRAMING AND MASONRY OPENING IS THE RESPONSIBILITY OF THE ARCHITECT OR ENGINEER OF RECORD.
3) CONTRACTOR IS RESPONSIBLE FOR MAINTAINING STRUCTURAL INTEGRITY OF WINDOW OPENING AND ALL WOOD FRAMING AROUND WINDOW.
4) RESPONSIBILITY OF SELECTING FENESTRATION PRODUCTS TO MEET ANY APPLICABLE LOCAL LAWS, BUILDING CODES, ORDINANCES OR OTHER SAFETY REQUIREMENTS REST SOLELY WITH THE ARCHITECT, ENGINEER OF RECORD, BUILDING OWNER OR CONTRACTOR.
5) APPROVED IMPACT PROTECTIVE SYSTEM IS NOT REQUIRED FOR THIS PRODUCT WIND BORNE DEBRIS REGIONS.
6) ALLOWABLE STRESS INCREASE OF 1/3 WAS NOT USED IN THE DESIGN OF THE PRODUCT SHOWN HEREIN. WIND LOAD DURATION FACTOR Cd=1.6 WAS USED FOR WOOD ANCHOR CALCULATIONS.
7) DESIGN PRESSURE AND INSTALLATION DETAILS SHOWN IN THIS DOCUMENT APPLY ONLY TO THE MULLION. WINDOWS MUST BE APPROVED UNDER SEPARATE APPROVAL.
8) SINGLE UNITS TO BE MULLED ARE NOT LIMITED TO THOSE SHOWN IN THIS DRAWING. SINGLE UNITS TO BE MULLED TOGETHER MUST BE MANUFACTURED BY KOLBE MILLWORK AND MUST BE MADE OUT OF VINYL PVC.
9) DESIGN PRESSURE OF MULLED UNIT SHALL BE CONTROLLED BY THE LESSER DESIGN PRESSURE OF THE MULLION OR THE INDIVIDUAL WINDOW UNIT.
10) HORIZONTAL MULLION SHALL EXTEND THE ENTIRE WIDTH OF THE MULLED UNIT. VERTICAL MULLION IS USED TO MULL TOP AND BOTTOM UNITS TOGETHER AND TO THE HORIZONTAL MULLION.
11) TWIN CONFIGURATION SHOWN. UNITS MAY BE MULLED TOGETHER INDEFINITELY AS LONG AS THE SINGLE UNIT WIDTH AND THE SINGLE UNIT HEIGHT ARE NOT EXCEEDED AND MULLION IS ANCHORED AS SHOWN HEREIN.
12) MULLION VERTICAL INSTALLATION IS SHOWN, MULLION MAY BE USED IN HORIZONTAL APPLICATIONS AS LONG AS DIMENSIONS INDICATED HEREIN ARE NOT EXCEEDED AND MULLION IS ANCHORED ACCORDING TO THIS DOCUMENT.

TABLE OF CONTENTS


| SHEET NO. | DESCRIPTION |
|---|---|
| 1 | ELEVATION AND GENERAL NOTES |
| 2 | ANCHORING ELEVATION AND NOTES |
| 3 | CROSS SECTIONS, B.O.M. AND INSTALLATION DETAILS |
| 4 | CROSS SECTIONS AND INSTALLATION DETAILS |
| 5 | COMPONENTS |


Approved as complying with the Florida Building Code
Date OCT. 7, 2009
NOA# 09-0203.08
Miami Dade Product Control Division
By Manuel Perez

KOLBE & KOLBE MILLWORK
1211 DEPOT ST
MANAWA, WI 54949

V707 IMPACT MULLION
"T" AND VERTICAL
ELEVATIONS AND GENERAL NOTES

| DRAWN: | DWG NO. | REV |
|---|---|---|
| A.M. | 08-00657 | A |

SCALE NTS | DATE 12/03/08 | SHEET 1 OF 5

Luis R. Lomas
9/08/09
Luis R. Lomas P.E.
Florida No. 62514

| REVISIONS | | | |
|---|---|---|---|
| REV | DESCRIPTION | DATE | APPROVED |
| A | PER DADE LETTER DATED JULY 16, 09 | 08/03/09 | R.L. |

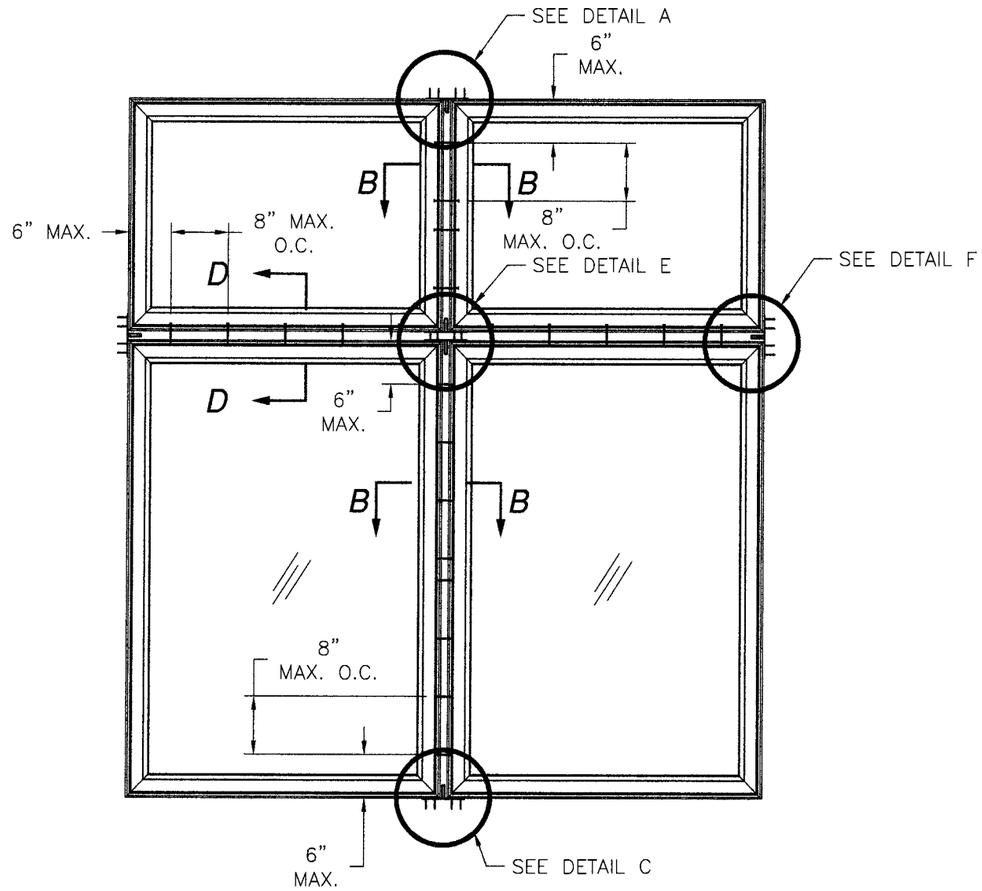


*V707 T IMPACT MULLION*

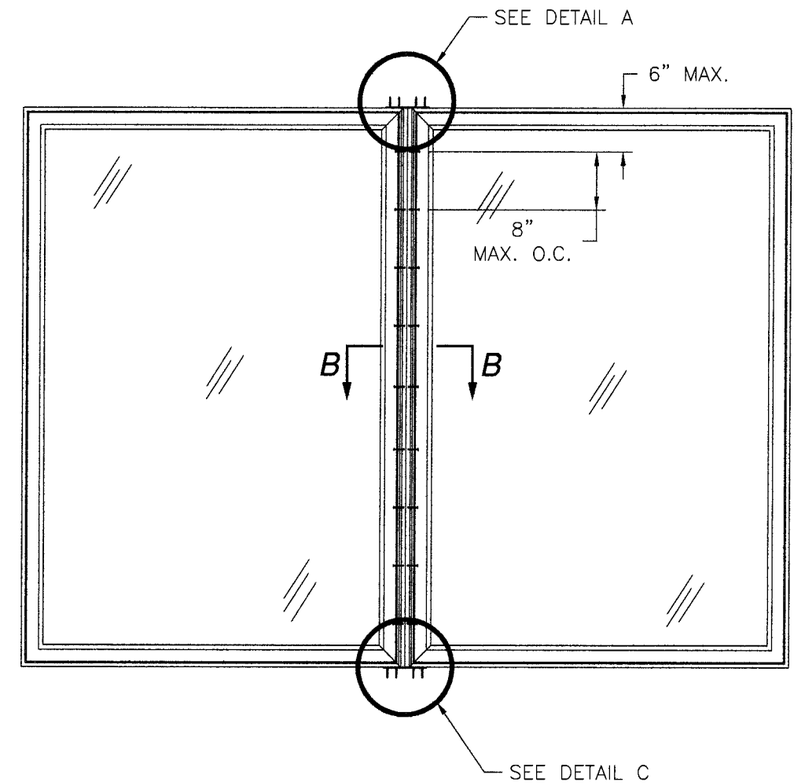


*V707 IMPACT MULLION*

ANCHORING NOTES:

1) FOR ANCHORING INTO MASONRY USE FOUR (4) 3/16" ITW TAPCONS WITH SUFFICIENT LENGTH TO ACHIEVE A 1 1/4" MINIMUM EMBEDMENT INTO SUBSTRATE WITH 2" MINIMUM EDGE DISTANCE AT EACH END OF MULLION. EMBEDMENT MUST BE BEYOND STUCCO AND OTHER SIMILAR TRIM MATERIAL. LOCATE ANCHORS AS SHOWN IN ELEVATION DETAILS. SUBSTRATE TO BE HOLLOW CMU OR CONCRETE WITH A 3,000PSI MIN. COMPRESSIVE STRENGTH.
2) FOR ANCHORING INTO WOOD FRAMING OR 2X BUCK USE EIGHT (8) #8 WOOD SCREW, OR EQUIVALENT WITH SUFFICIENT LENGTH TO ACHIEVE A 1 3/8" MINIMUM EMBEDMENT INTO SUBSTRATE AT EACH END OF MULLION. EMBEDMENT MUST BE BEYOND STUCCO AND OTHER SIMILAR TRIM MATERIAL. LOCATE ANCHORS AS SHOWN IN ELEVATION DETAILS. SUBSTRATE TO BE SPRUCE-PINE-FIR OR DENSER.
3) FOR ATTACHING WINDOW UNITS TO MULLION USE #8 SMS SELF TAPPING SCREWS WITH SUFFICIENT LENGTH TO ACHIEVE A MINIMUM EMBEDMENT OF THREE THREADS PAST THE MULLION WALL. LOCATE SCREWS AS SHOWN IN ANCHOR ELEVATION.
4) FOR WINDOW UNITS ANCHORING SCHEDULE REFER TO WINDOW APPROVED INSTALLATION INSTRUCTIONS.
5) INSTALLATION ANCHORS SHALL BE INSTALLED IN ACCORDANCE WITH ANCHOR MANUFACTURER'S INSTALLATION INSTRUCTIONS, AND ANCHORS SHALL NOT BE USED IN SUBSTRATES WITH STRENGTHS LESS THAN THE MINIMUM STRENGTH SPECIFIED BELOW:
   A. WOOD – MINIMUM SPECIFIC GRAVITY OF G=0.42
   B. CONCRETE – MINIMUM COMPRESSIVE STRENGTH OF 3,000 PSI.
   C. MASONRY – STRENGTH CONFORMANCE TO ASTM C-90, GRADE N, TYPE 1 (OR GREATER).

Approved as complying with the Florida Building Code
Date OCT. 7 2009
NOAR 09-0203.08
Miami Dade Product Control Division
By Manuel Perez

KOLBE & KOLBE MILLWORK
1211 DEPOT ST
MANAWA, WI 54949

V707 IMPACT MULLION
"T" AND VERTICAL
ANCHORING ELEVATIONS AND NOTES

| DRAWN: | DWG NO. | REV |
|---|---|---|
| A.M. | 08-00657 | A |
| SCALE NTS | DATE 12/03/08 | SHEET 2 OF 5 |

Luis R. Lomas
9/08/09

Luis R. Lomas P.E.
Florida No. 62514

| PARTS LIST | | | | |
|---|---|---|---|---|
| NO. | PART NUMBER | DESCRIPTION | MANUFACTURER | MATERIAL |
| 1 | A118-02P078 | 4" ALUMINUM MULLION | EXTRUDEX | ALUMINUM 6065-T6 |
| 2 | A116-02M078 | MULLION CONNECTOR (CLIP) | EXTRUDEX | ALUMINUM 6065-T6 |
| 3 | 4534 | MULLION CAP | THERMOPLAST | PVC |
| 4 | 4529 | ADAPTER | THERMOPLAST | PVC |
| 5 | 1688 | CAP | THERMOPLAST | PVC |
| 6 | 500080 | INSTALLATION CLIP (G60) | THERMOPLAST | GALVANIZED STEEL |

| REVISIONS | | | |
|---|---|---|---|
| REV | DESCRIPTION | DATE | APPROVED |
| A | PER DADE LETTER DATED JULY 16, 09 | 08/03/09 | R.L. |

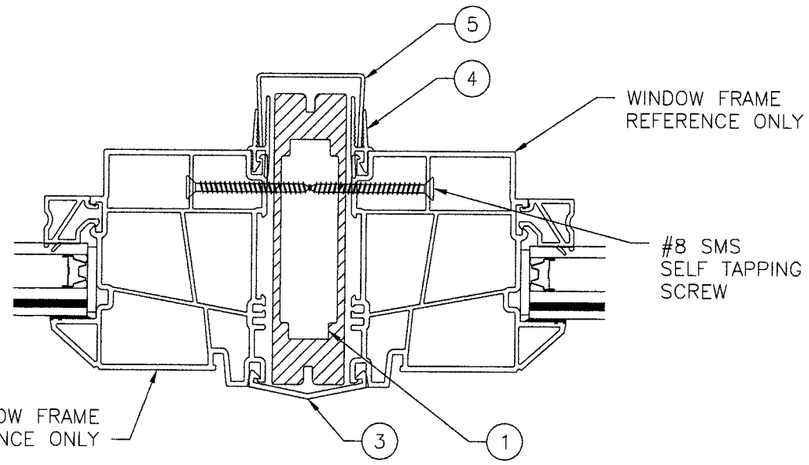


**SECTION B-B**

*WINDOW INSTALLATION DETAIL*

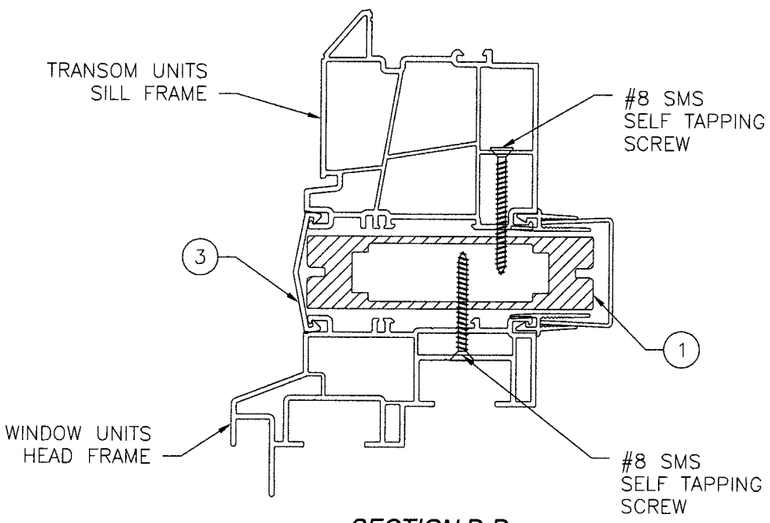


**SECTION D-D**

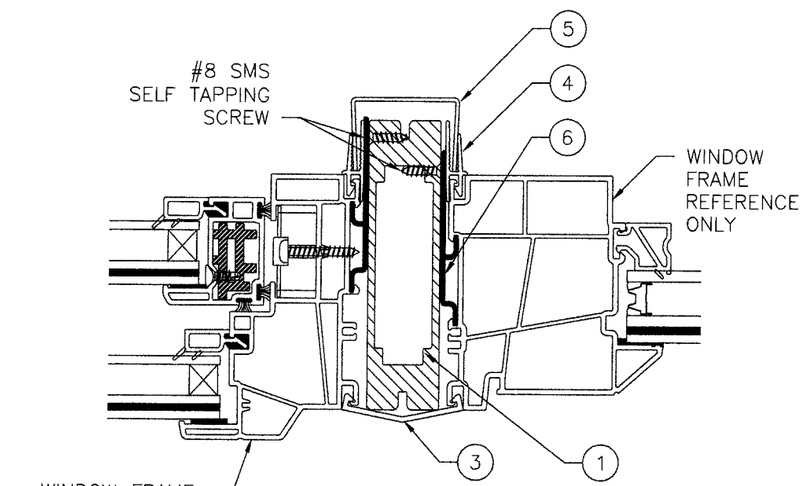


**SECTION B-B**

*WINDOW WITH CLIP INSTALLATION (OPTIONAL)*

Approved as complying with the Florida Building Code
Date OCT. 7, 2009
NOA# 09-0203.08
Miami-Dade Product Control Division
By Manuel Perez

KOLBE & KOLBE MILLWORK
1211 DEPOT ST
MANAWA, WI 54949

V707 IMPACT MULLION
"T" AND VERTICAL
CROSS SECTIONS AND INSTALLATION DETAILS

| DRAWN: | DWG NO. | REV |
|---|---|---|
| A.M. | 08-00657 | A |
| SCALE NTS | DATE 12/03/08 | SHEET 3 OF 5 |

Luis R. Lomas 9/08/09

Luis R. Lomas P.E.
Florida No. 62514

| REVISIONS | | | |
|---|---|---|---|
| REV | DESCRIPTION | DATE | APPROVED |
| A | PER DADE LETTER DATED JULY 16, 09 | 08/03/09 | R.L. |

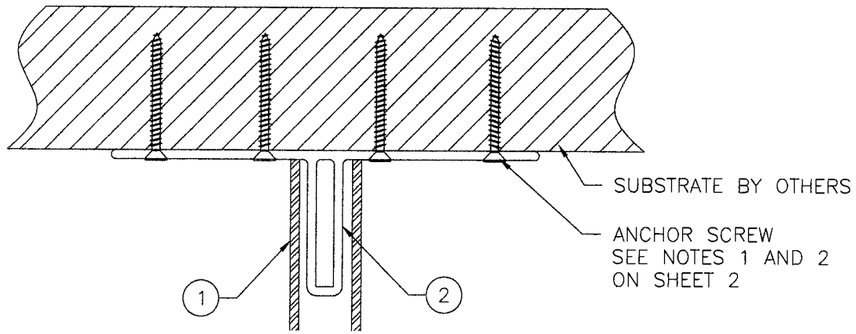


**DETAIL A**
*VERTICAL MULLION*
*TOP CLIP INSTALLATION*

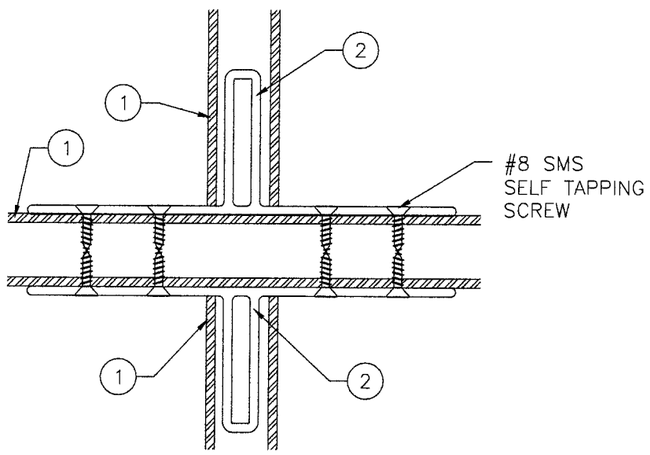


**DETAIL E**
*HORIZONTAL AND VERTICAL MULLION*
*INTERSECTION CLIP INSTALLATION*

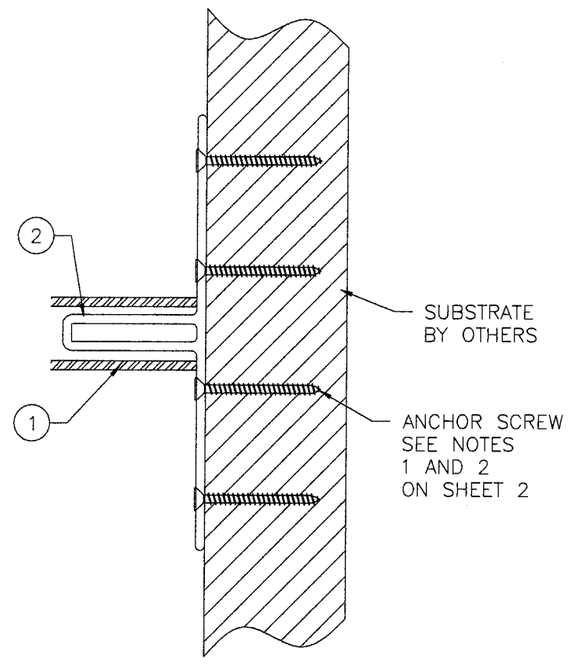


**DETAIL F**
*HORIZONTAL MULLION*
*SIDE CLIP INSTALLATION*

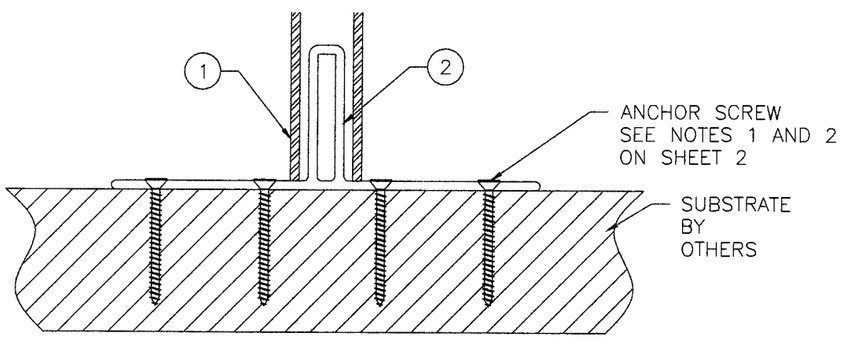


**DETAIL C**
*VERTICAL MULLION*
*BOTTOM CLIP INSTALLATION*

Approved as complying with the Florida Building Code
Date OCT. 7, 2009
NOA# 09-0203.08
Miami Dade Product Control Division
By Manuel Perez

KOLBE & KOLBE MILLWORK
1211 DEPOT ST
MANAWA, WI 54949

V707 IMPACT MULLION
"T" AND VERTICAL
CROSS SECTIONS AND INSTALLATION DETAILS

| DRAWN: | DWG NO. | REV |
|---|---|---|
| A.M. | 08-00657 | A |
| SCALE NTS | DATE 12/03/08 | SHEET 4 OF 5 |

Luis R. Lomas
9/08/09

Luis R. Lomas P.E.
Florida No. 62514

| REVISIONS | | | |
|---|---|---|---|
| REV | DESCRIPTION | DATE | APPROVED |
| A | PER DADE LETTER DATED JULY 16, 09 | 08/03/09 | R.L. |

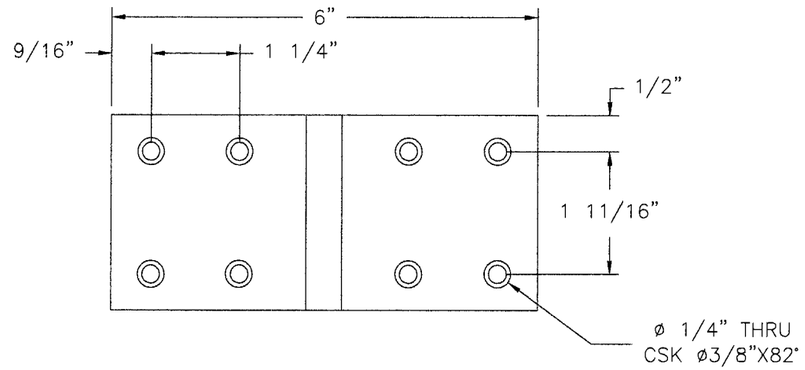


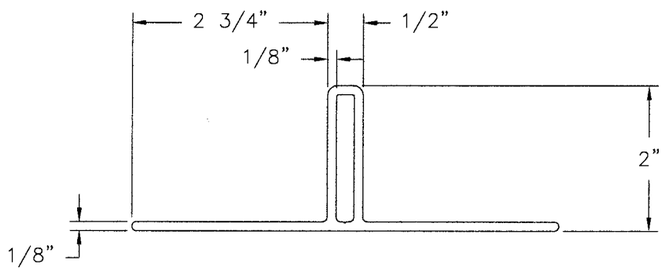


(2) **MULLION CONNECTOR (CLIP)**
ALUMINUM 6063-T6
HOLE PATTERN FOR WOOD INSTALLATION

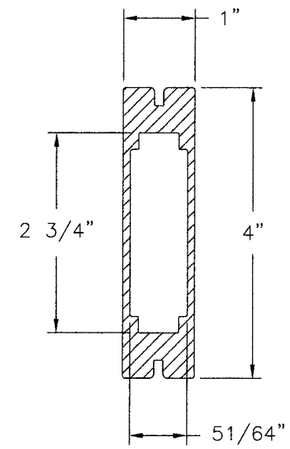


(1) **4" ALUMINUM MULLION**
ALUMINUM 6063-T6

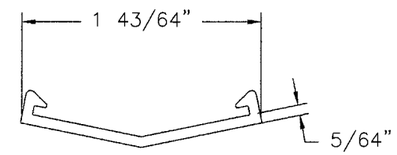


(3) **MULLION CAP**
VINYL PVC

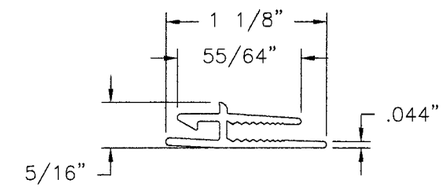


(4) **ADAPTER**
VINYL PVC

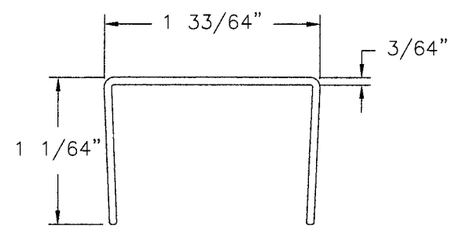


(5) **CAP**
VINYL PVC

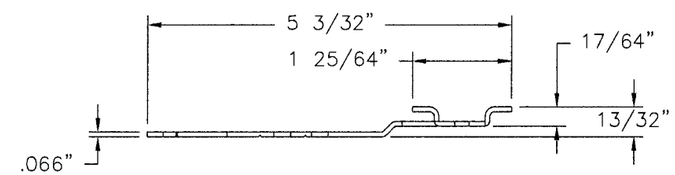


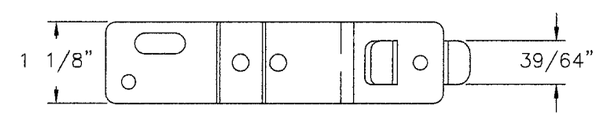


(6) **INSTALLATION CLIP**
GALVANIZED STEEL G60

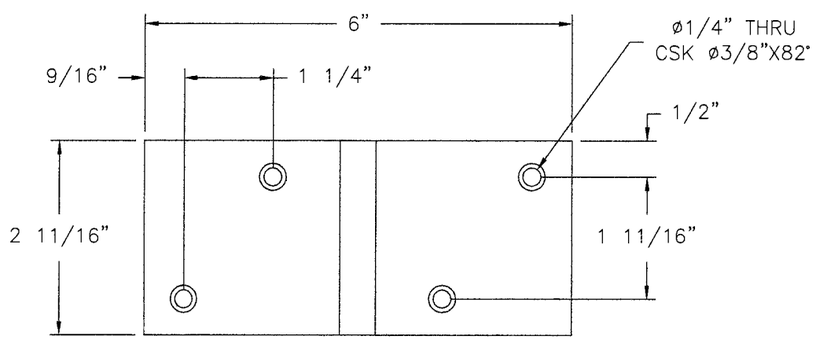


(2) **MULLION CONNECTOR (CLIP)**
ALUMINUM 6063-T6
HOLE PATTERN FOR MASONRY INSTALLATION

Approved as complying with the Florida Building Code
Date OCT. 7, 2009
NOA# 09-0203.03
Miami Dade Product Control Division
By Manuel Perez

KOLBE & KOLBE MILLWORK
1211 DEPOT ST
MANAWA, WI 54949

V707 IMPACT MULLION
"T" AND VERTICAL
COMPONENTS

| DRAWN: | DWG NO. | REV |
|---|---|---|
| A.M. | 08-00657 | A |

SCALE NTS | DATE 12/03/08 | SHEET 5 OF 5

Luis R. Lomas
9/08/09

Luis R. Lomas P.E.
Florida No. 62514