MIAMI-DADE COUNTY
BUILDING CODE COMPLIANCE OFFICE (BCCO)
PRODUCT CONTROL DIVISION

MIAMI-DADE COUNTY, FLORIDA
METRO-DADE FLAGLER BUILDING
140 WEST FLAGLER STREET, SUITE 1603
MIAMI, FLORIDA 33130-1563
(305) 375-2901 FAX (305) 375-2908
www.miamidade.gov/buildingcode

NOTICE OF ACCEPTANCE (NOA)

Stanley Security Solutions
6161 East 75th Street
Indianapolis, IN 46250

SCOPE:

This NOA is being issued under the applicable rules and regulations governing the use of construction materials. The documentation submitted has been reviewed by Miami-Dade County Product Control Division and accepted by the Board of Rules and Appeals (BORA) to be used in Miami Dade County and other areas where allowed by the Authority Having Jurisdiction (AHJ).

This NOA shall not be valid after the expiration date stated below. The Miami-Dade County Product Control Division (In Miami Dade County) and/or the AHJ (in areas other than Miami Dade County) reserve the right to have this product or material tested for quality assurance purposes. If this product or material fails to perform in the accepted manner, the manufacturer will incur the expense of such testing and the AHJ may immediately revoke, modify, or suspend the use of such product or material within their jurisdiction. BORA reserves the right to revoke this acceptance, if it is determined by Miami-Dade County Product Control Division that this product or material fails to meet the requirements of the applicable building code.

This product is approved as described herein, and has been designed to comply with the Florida Building Code, including the High Velocity Hurricane Zone.

DESCRIPTION: Series 40H Mortise Lockset w/ wo Dead bolt (Hardware -Component Approval)

APPROVAL DOCUMENT: Drawing No. **"06-BAS-0001",** titled "Series 40H Mortise Lock set", sheets 1 through 2 of 2, prepared by Engineering Express, dated 02/22/06 and last revised on 01/13/2009, signed and sealed by Frank L. Bennardo, P.E., bearing the Miami-Dade County Product Control Revision stamp with the Notice of Acceptance number and expiration date by the Miami-Dade County Product Control Division.

MISSILE IMPACT RATING: Large and Small Missile Impact

Limitation:

1. This component is approved to be used as an alternate with an approved single or double Steel doors, having current NOA (Notice of Acceptance).
2. Lowest design pressure of doors or this component may control, see respective NOA(s).
3. Electrical device installation is not part of this approval, such installation to be reviewed by AHJ.

LABELING: Each unit shall bear a permanent label with the manufacturer's name or logo, city, state and following statement: "Miami-Dade County Product Control Approved", unless otherwise noted herein.

RENEWAL of this NOA shall be considered after a renewal application has been filed and there has been no change in the applicable building code negatively affecting the performance of this product.

TERMINATION of this NOA will occur after the expiration date or if there has been a revision or change in the materials, use, and/or manufacture of the product or process. Misuse of this NOA as an endorsement of any product, for sales, advertising or any other purposes shall automatically terminate this NOA. Failure to comply with any section of this NOA shall be cause for termination and removal of NOA.

ADVERTISEMENT: The NOA number preceded by the words Miami-Dade County, Florida, and followed by the expiration date may be displayed in advertising literature. If any portion of the NOA is displayed, then it shall be done in its entirety.

INSPECTION: A copy of this entire NOA shall be provided to the user by the manufacturer or its distributors and shall be available for inspection at the job site at the request of the Building Official.

This NOA **revises & renews** NOA # **06-0309.04** (Former **Stanley Best Access system**) consists of this page 1 and evidence pages E-1, as well as approval document mentioned above.

The submitted documentation was reviewed by **Ishaq I. Chanda, P.E.**

MIAMI-DADE COUNTY APPROVED

6/11/19

NOTICE OF ACCEPTANCE: EVIDENCE SUBMITTED

A. DRAWINGS

1. Manufacturer's parts and sections drawings (transferred from file **06-0309.04**)
2. Drawing No. **"06-BAS-0001"**, titled "Series 40H Mortise Lock set", sheets 1 through 2 of 2, prepared by Engineering Express, dated 02/22/06 and last revised on 01/13/2009, signed and sealed by Frank L. Bennardo, P.E.

B. TESTS (transferred from file # **06-0309.04**)

1. Test Reports No. **FTL- 4606 & FTL-4605**, prepared by Fenestration Testing Laboratory, Inc., dated June 21, 2005, signed and sealed by Edmundo Lagaespada, P.E., for the following tests:
   1) Air Infiltration Test, per FBC, PA 202-94
   2) Uniform Static Air Pressure Test, Loading per FBC, PA 202-94
   3) Water Resistance Test per FBC, PA 202-94 (Not performed)
   4) Large Missile Impact Test per FBC, PA 201-94
   5) Cyclic Wind Pressure Loading per FBC, PA 203-94
   6) Forced Entry Test, per FBC 2411.3.2.1 (b) and PA 202-94

along with manufacturer's parts and section drawings marked by Fenestration Testing Laboratory, Inc.

C. CALCULATIONS

1. None

D. QUALITY ASSURANCE

1. Miami Dade Building Code Compliance Office (BCCO).

E. MATERIAL CERTIFICATIONS

1. None

F. STATEMENTS

1 Statement letter of conformance and "No financial interest", both dated 06/11/09, signed and sealed by Frank L. Bennardo, P.E.

2 Statement letter dated Jan 29, 2007 of Stanley Works acquired shares of Best Lock dba Best Access system, signed by Kara J. Dean, Council Stanley Access.

3 Certificate of amendment of Best Lock to Stanley Security Solution Inc, issued by State of Indiana on Aug. 30, 2003.

4 Statement letter of Lab compliance, as part of above test reports.

G. OTHER

1. This NOA **revises** & **renews** NOA # **06-0309.04** (Former **Stanley Best Access System**), expiring 10/26/11.
2. Certificate of name amendment issued by State of Indiana.

Ishaq I. Chanda

Ishaq I. Chanda, P.E.
Product Control Examiner
NOA No 09-0209.06
Expiration Date: October 26, 2011
Approval Date: July 08, 2009

SERIES 40H MORTISE LOCKSET

WITH OR WITHOUT DEADBOLT

FRANK L. BENNARDO, P.E.
PE0046549

01/13/2009

SINGLE DOOR APPLICATION

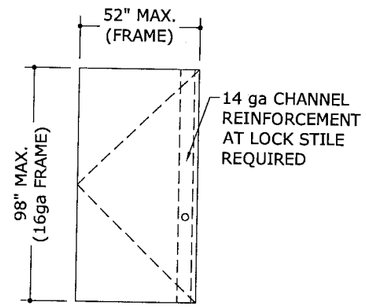

DOUBLE DOOR APPLICATION

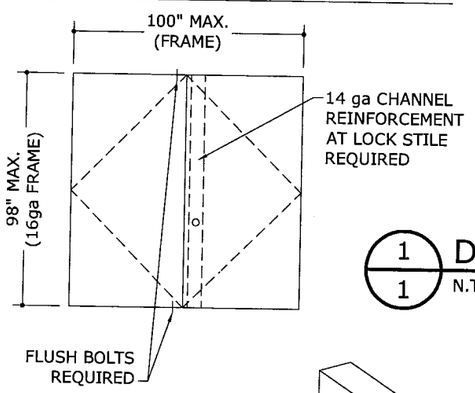

1/1 DOOR CONFIGURATIONS

N.T.S. EXTERIOR ELEVATION

GENERAL NOTES:

1) THE SYSTEM DESCRIBED HEREIN HAS BEEN DESIGNED AND TESTED IN ACCORDANCE WITH THE FLORIDA BUILDING CODE 2007, HIGH VELOCITY HURRICANE ZONES, AND TEST PROTOCOLS TAS 201, 202, & 203.

2) OPENING DESIGN LOADS SHALL BE DETERMINED BY OTHERS IN ACCORDANCE WITH THE GOVERNING CODE.

3) SCREWS (PARTS 1 & 16) FOR 1 3/4" - 2" THICK DOOR SHOWN. LENGTHS FOR THESE SCREWS SHALL BE:

1.750" FOR 2 1/4" - 2 1/2" DOOR
2.250" FOR 2 3/4" - 3 1/2" DOOR
2.750" FOR 3 3/4" - 4 1/2" DOOR
3.250" FOR 4 3/4" - 5" DOOR

PRODUCT REVISED
as complying with the Florida Buiding Code
Acceptance No 09-0209-06
Expiration Date OCT 26, 2011
By Ishwar J. Chand
Miami Dade Product Control Division

DESIGN PRESSURE SCHEDULE

	SINGLE DOOR MAX PANEL SIZE: 48"x96" MAX FRAME SIZE: 52"x98"	DOUBLE DOORS MAX PANEL SIZE: 48"x96" MAX FRAME SIZE: 100"x98"
NO DEAD BOLT	±60 PSF	±35 PSF
WITH DEAD BOLT	±100 PSF	±50 PSF

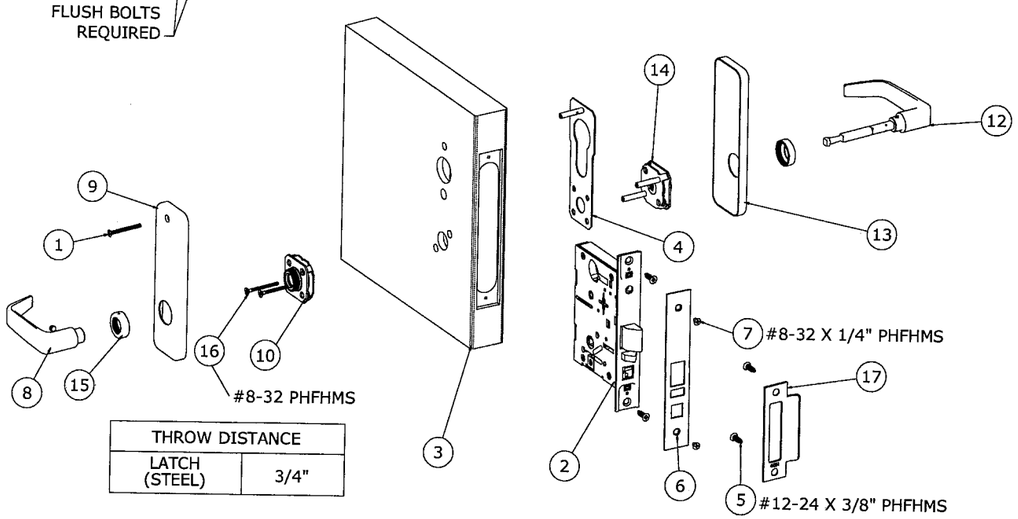

THROW DISTANCE	
LATCH (STEEL)	3/4"

2/1 EXPLODED MORTISE LOCKSET WITHOUT DEADBOLT

N.T.S. ISOMETRIC

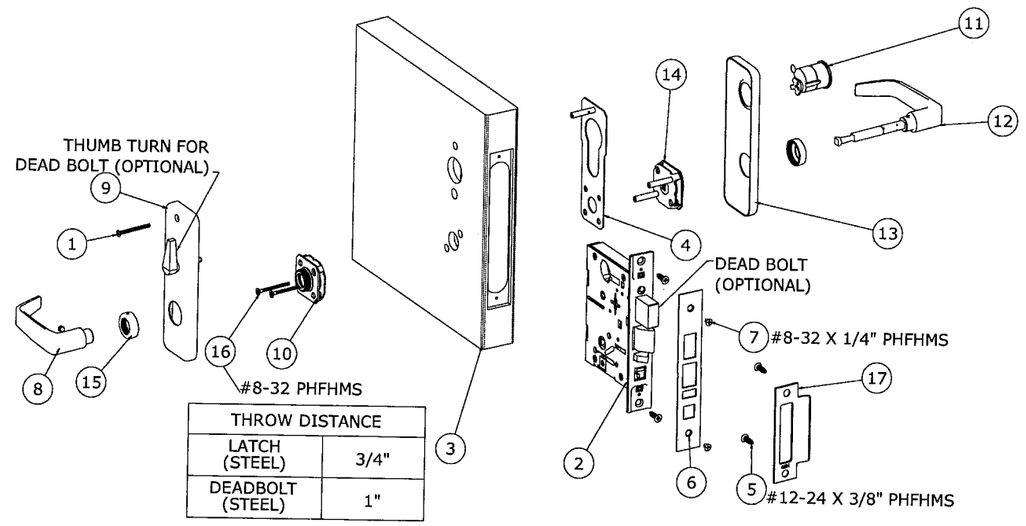

THROW DISTANCE	
LATCH (STEEL)	3/4"
DEADBOLT (STEEL)	1"

3/1 EXPLODED MORTISE LOCKSET WITH DEADBOLT

N.T.S. ISOMETRIC

LIMITATIONS:

1) THIS DEVICE IS APPROVED AS AN EQUAL ALTERNATIVE TO BE USED IN SINGLE OR DOUBLE 19ga STEEL COMMERCIAL DOORS WITH 16 ga FRAME, HOLDING A CURRENT NOA. DESIGN PRESSURES SHALL APPLY ACCORDING TO THE DESIGN PRESSURE SCHEDULE.

2) INSTALLATION OF THESE DEVICES REQUIRES A 14ga FORMED STEEL REINFORCEMENT BOX AND PLATE (0.072" X 1.667" X 6.000") AT LOCK SIDE (STILE) AND 1 ⅝ x 5 ⅝ x 1 ⅝ x .082" FULL LENGTH CHANNEL.

3) ELECTRICAL DEVICE INSTALLATION IS NOT PART OF THIS APPROVAL AND SUCH INSTALLATION MUST BE REVIEWED BY THE APPROPRIATE BUILDING AUTHORITY.

4) THIS DEVICE SHALL BE INSTALLED IN SINGLE AND/OR DOUBLE COMMERCIAL STEEL DOORS WITH FRAME DIMENSIONS SPECIFIED HEREIN. DOOR PANELS SHALL BE FBC APPROVED AND WITH 14 ga HAT STIFFNER "CORE" FILLED, WITH 1-3/4" MINIMUM NOMINAL OVERALL THICKNESS. ALL INACTIVE PANELS OF DOUBLE DOORS SHALL BE SECURED WITH BOLTS AT TOP AND BOTTOM.

5) THIS DEVICE CAN BE INSTALLED AS PART OF A LARGE MISSILE IMPACT RESISTANT UNIT.

ENGINEERING EXPRESS®
160 SW 12th AVENUE, #106
DEERFIELD BEACH, FL 33442
Ph: (954) 354-0660 Fax: (954) 354-0443
WWW.ENGEXP.COM
CERT OF AUTH #9885
A FRANK L. BENNARDO, P.E., INC. INNOVATION

STANLEY
SECURITY SOLUTIONS
6161 E 75TH STREET, INDIANAPOLIS, IN 46250

SERIES 40H MORTISE LOCKSET
WITH & WITHOUT DEAD BOLT
MIAMI-DADE NOTICE OF ACCEPTANCE

REMARKS	DRWN	CHKD	DATE
INIT ISSUE	CL	FLB	02/22/06
BCCO COMMENTS	JEM	CL	09/05/06
2007 FBC	RKB	C;	01/13/08
-	-	-	-
-	-	-	-

06-BAS-0001

SCALE: - 01

PAGE DESCRIPTION:
-
-

2

1

01/13/2009 - 2:16pm rbartlett F:\01 Project Files\Best Access Systems (BAS)\06-BAS-0001_02a 40H Mortise Lockset, with & without Dead Bolt (NOA).dwg

MORTISE LOCKSET WITHOUT DEADBOLT

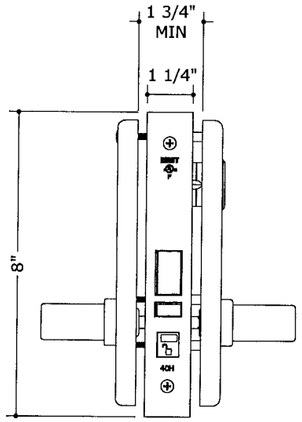

1/2 FRONT VIEW
3" = 1'-0"

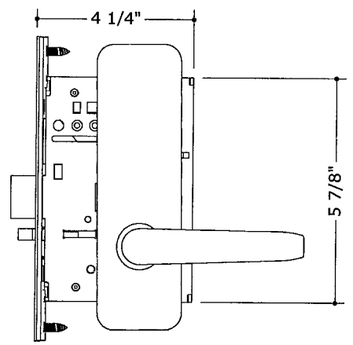

2/2 SIDE VIEW
3" = 1'-0"

MORTISE LOCKSET WITH DEADBOLT

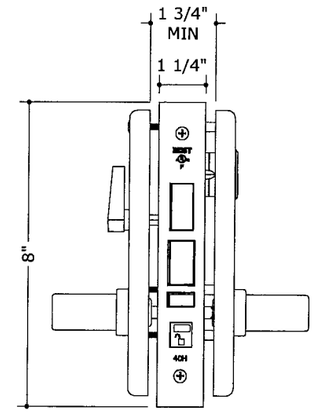

3/2 FRONT VIEW
3" = 1'-0"

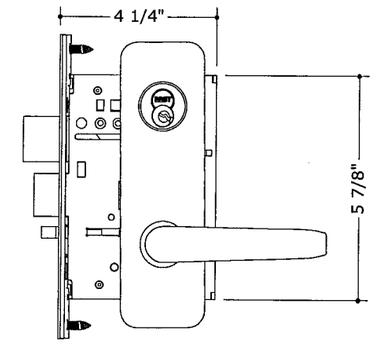

4/2 SIDE VIEW
3" = 1'-0"

PRODUCT REVISED
as complying with the Florida
Building Code
Acceptance No 04-0209.06
Expiration Date OCT 26, 2011
By Ishaq I. Chanda
Miami Dade Product Control
Division

MATERIAL & PARTS LIST

	ITEM	DRAWING	DESCRIPTION	QTY REQ'D
	17	C44004	UNIVERSAL STRIKE FOR 40H MORTISE LOCK	1
	16	A44215	TRIM CASSETTE MOUNTING SCREWS FOR 40H MORTISE LOCK	2
	15	B44182	ROSE RING FOR 40H MORTISE LOCK	2
	14	B45081	OUSIDE TRIM CASSETTE - LEVER FOR 40H MORTISE LOCK	1
	13	D44092	O/S STAMPED ESCUTCHEON FOR 40H "J" TRIM	1
	12	B45160	O/S #15 LEVER & SPINDLE ASSY FOR 40H MORTISE LOCK	1
	11	CYLINDER_258CAM	INSTALL CYLINDER AND CAM PER ORDER	1
	10	B45071	INSIDE TRIM CASSETTE - LEVER FOR 40H MORTISE LOCK	1
	9	B45200	I/S STAMPED ESCUTCHEON W/THUMBTURN FOR 40H MORTISE LOCK	1
	8	B45150	I/S #15 LEVER & SET SCREW ASM FOR 40H MORTISE LOCK	1
	7	A18722	FACEPLATE SCREW FOR MORTISE LOCKS	2
	6	D44030	FACEPLATE FOR 40H MORTISE LOCK	1
	5	A18724	CASE & STRIKE MOUNTING SCREW FOR 30H & 40H MORTISE LOCK	4
	4	A35466	ALIGNMENT PLATE ASSEMBLY FOR 30H "J" TRIM	1
	3	40H-DOOR	40H DOOR SAMPLE	1
	2	C45502	40H AB FUNCTION MORTISE LOCK-FINAL ASSEMBLY WITH DEAD BOLT	1
	2A	-	40H MORTISE LOCK WITHOUT DEAD BOLT	1
	1	A44241	"J" TRIM ALIGNMENT PLATE MOUNTING SCREWS FOR 40H MORTISE LOCK	1

FRANK L. BENNARDO, P.E.
PE0046549
01/13/2009

ENGINEERING EXPRESS®
160 SW 12th AVENUE, #106
DEERFIELD BEACH, FL 33442
Ph: (954) 354-0660 Fax: (954) 354-0443
WWW.ENGEXP.COM
CERT OF AUTH #9885
A. FRANK L. BENNARDO, P.E., INC. INNOVATION

STANLEY
SECURITY SOLUTIONS
6161 E 75TH STREET, INDIANAPOLIS, IN 46250

SERIES 40H MORTISE LOCKSET
WITH & WITHOUT DEAD BOLT
MIAMI-DADE NOTICE OF ACCEPTANCE

REMARKS	DRWN	CHKD	DATE
INIT ISSUE	CL	FLB	02/22/06
BCCO COMMENTS	JEM	CL	09/05/06
2007 FBC	RKB	C.	01/13/08
-	-	-	-
-	-	-	-

06-BAS-0001
SCALE: - 01
PAGE DESCRIPTION:
-
-

2

2

01/13/2009 - 2:16pm rbartlett F:\01 Project Files\Best Access Systems (BAS)\06-BAS-0001 40H Mortise Lockset, with & without Dead Bolt (NOA)\06-BAS-0001_02a 40H Mortise Lockset, without Dead Bolt (NOA).dwg