MIAMI-DADE COUNTY

BUILDING CODE COMPLIANCE OFFICE (BCCO)
PRODUCT CONTROL DIVISION

MIAMI-DADE COUNTY, FLORIDA
METRO-DADE FLAGLER BUILDING
140 WEST FLAGLER STREET, SUITE 1603
MIAMI, FLORIDA 33130-1563
(305) 375-2901 FAX (305) 375-2908
www.buldingcodeonline.com

NOTICE OF ACCEPTANCE (NOA)

TRACO Security Windows & Doors, Inc.
71 Progress Avenue
Cranberry Township, PA 16066

SCOPE:
This NOA is being issued under the applicable rules and regulations governing the use of construction materials. The documentation submitted has been reviewed by Miami-Dade County Product Control Division and accepted by the Board of Rules and Appeals (BORA) to be used in Miami Dade County and other areas where allowed by the Authority Having Jurisdiction (AHJ).
This NOA shall not be valid after the expiration date stated below. The Miami-Dade County Product Control Division (In Miami Dade County) and/or the AHJ (in areas other than Miami Dade County) reserve the right to have this product or material tested for quality assurance purposes. If this product or material fails to perform in the accepted manner, the manufacturer will incur the expense of such testing and the AHJ may immediately revoke, modify, or suspend the use of such product or material within their jurisdiction. BORA reserves the right to revoke this acceptance, if it is determined by Miami-Dade County Product Control Division that this product or material fails to meet the requirements of the applicable building code.
This product is approved as described herein, and has been designed to comply with the Florida Building Code, including the High Velocity Hurricane Zone.

DESCRIPTION: Series HR 242/542 Aluminum Horizontal Sliding Window – L.M.I.

APPROVAL DOCUMENT: Drawing No. **06-TRA-0006**, titled "HR 242/542 (Series 140) Alum. Horiz. Sliding Window – Large Missile Impact Resistant", sheets 1 through 4 of 4, dated 12/20/06, with latest revision on 05/05/09 prepared by Engineering Express, signed and sealed by Frank L. Bennardo, P.E., bearing the Miami-Dade County Product Control Revision stamp with the Notice of Acceptance number and expiration date by the Miami-Dade County Product Control Division.

MISSILE IMPACT RATING: Large and Small Missile Impact Resistant

LABELING: Each unit shall bear a permanent label with the manufacturer's name:

TRACO	**TRACO**	**Security (TRACO)**
71 Progress Avenue	**2304 Silverdale Road**	**5100 N.W. 72nd Avenue**
Cranberry Township, PA 16066	**Johnson City, TN 37601**	**Miami, FL 33166**

and the following statement: "**Miami-Dade County Product Control Approved**".

RENEWAL of this NOA shall be considered after a renewal application has been filed and there has been no change in the applicable building code negatively affecting the performance of this product.

TERMINATION of this NOA will occur after the expiration date or if there has been a revision or change in the materials, use, and/or manufacture of the product or process. Misuse of this NOA as an endorsement of any product, for sales, advertising or any other purposes shall automatically terminate this NOA. Failure to comply with any section of this NOA shall be cause for termination and removal of NOA.

ADVERTISEMENT: The NOA number preceded by the words Miami-Dade County, Florida, and followed by the expiration date may be displayed in advertising literature. If any portion of the NOA is displayed, then it shall be done in its entirety.

INSPECTION: A copy of this entire NOA shall be provided to the user by the manufacturer or its distributors and shall be available for inspection at the job site at the request of the Building Official.
This NOA **revises NOA # 07-0124.01** and consists of this page 1 and evidence page E-1, as well as approval document mentioned above.
The submitted documentation was reviewed by **Fitz A. Harris, P.E.**

MIAMI-DADE COUNTY APPROVED

Fitz A. Harris
5/28/09

TRACO Security Windows & Doors, Inc.

NOTICE OF ACCEPTANCE: EVIDENCE SUBMITTED

A. DRAWINGS

1. Manufacturer's die drawings and sections.
2. Drawing No **06-TRA-0006**, Sheets 1 through 4 of 4, titled "HR 242/542 (Series 140) Alum. Horiz. Sliding Window – Large Missile Impact Resistant", dated 12/20/06, with latest revision on 05/05/09, prepared by Engineering Express, signed and sealed by Frank L. Bennardo, P.E.

B. TESTS

1. Test reports on 1) Air Infiltration Test, per SFBC, PA 202-94
   2) Uniform Static Air Pressure Test, Loading per SFBC,PA 202-94
   3) Water Resistance Test, per SFBC, PA 202-94
   4) Large Missile Impact Test per SFBC, PA 201-94
   5) Cyclic Wind Pressure Loading per SFBC, PA 203-94
   6) Forced Entry Test, per SFBC 3603.2 (b) and PA 202-94

   along with marked-up drawings and installation diagram of an aluminum horizontal sliding window, prepared by Fenestration Testing Laboratory, Inc., Test Report No. **FTL-3201**, dated 11/7/01, signed and sealed by Luis Figueredo, P.E.
   (Submitted under previous NOA #02-0124.01)

C. CALCULATIONS

1. Anchor verification calculations and structural analysis, complying with FBC-2004, prepared by Engineering Express, dated 12/27/06, signed and sealed by Frank L. Bennardo, P.E.
   (Submitted under previous NOA #07-0124.01)
   Complies with ASTM E1300-02

D. QUALITY ASSURANCE

1. Miami Dade Building Code Compliance Office (BCCO).

E. MATERIAL CERTIFICATIONS

1. Notice of Acceptance No. **07-1116.11** issued to Saf-Glas, L.L.C. for their "SAF-GLAS" dated 12/27/07, expiring on 12/16/2012.
2. Notice of Acceptance No. **06-0216.06** issued to Solutia Inc. for their "**Saflex IIIG"** dated 05/04/06, expiring on 05/21/2011.

F. STATEMENTS

1. Statement letter of conformance, dated February 5, 2009, signed and sealed by Frank L. Bennardo, P.E.
2. Statement letter of no financial interest, dated January 10, 2007, signed and sealed by Frank L. Bennardo, P.E.

Fitz A. Harris

Fitz A. Harris, P.E.
Product Control Examiner
NOA No 09-0210.08
Expiration Date: October 17, 2012
Approval Date: June 17, 2009

G. OTHER

1. Notice of Acceptance No. **07-0124.01**, issued to Traco Security Windows & Doors for their Series "140 (242-542)" Aluminum Horizontal Sliding Window, approved on 03/29/07 and expiring on 10/17/2012.

Fitz A. Harris, P.E.
Product Control Examiner
NOA No 09-0210.08
Expiration Date: October 17, 2012
Approval Date: June 17, 2009

HR 242/542 ALUM. HORIZ. SLIDING WINDOW

LARGE MISSILE IMPACT RESISTANT

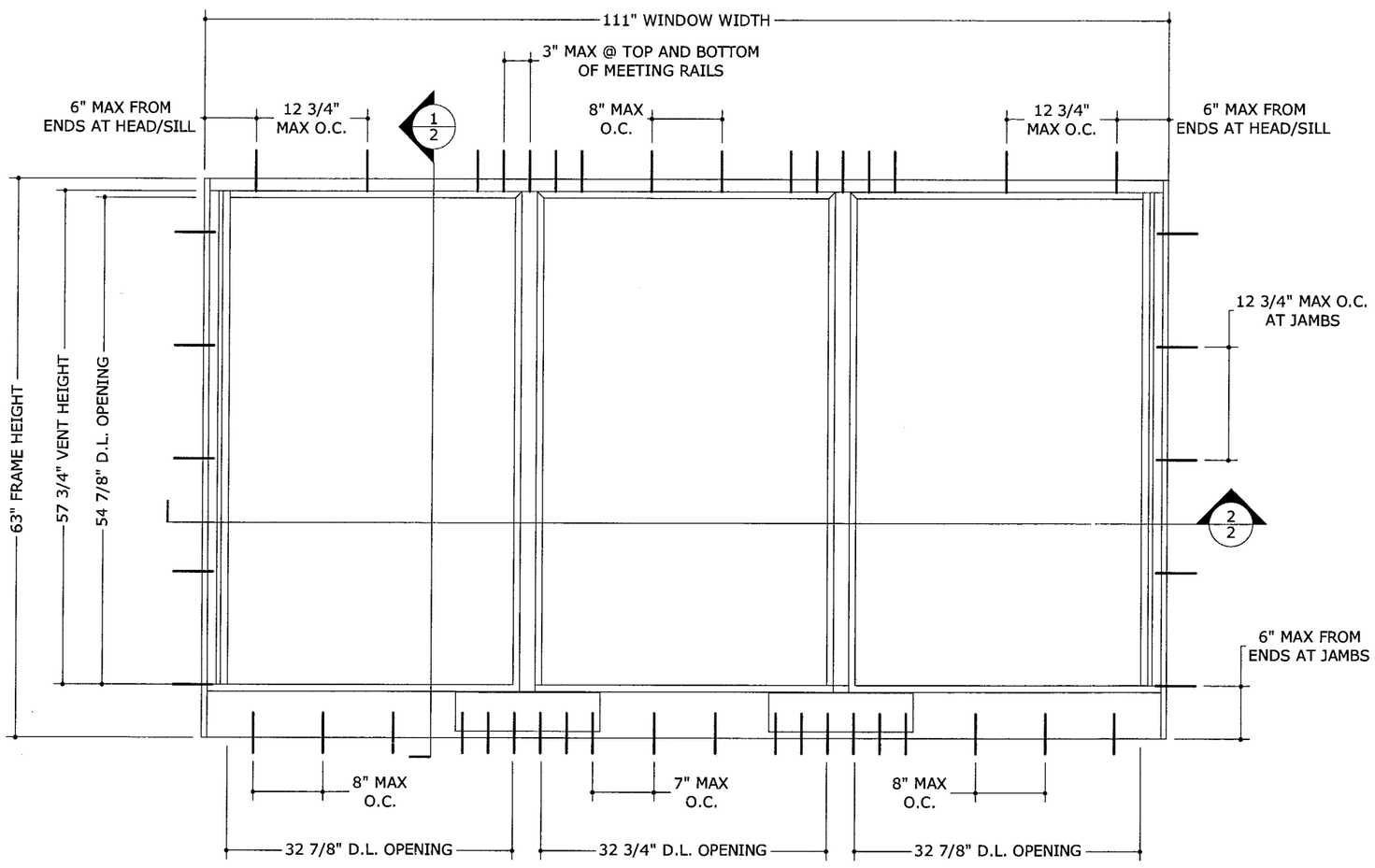

1/1 TYPICAL EXTERIOR ELEVATION

N.T.S.

ALLOWABLE DESIGN PRESSURES

GLAZING A:	+100/-90 PSF	(G.E. OR DOW SEALANT)
GLAZING B:	+100/-100 PSF	(DOW SEALANT)
	+100/-90 PSF	(G.E. SEALANT)
GLAZING C:	+70/-70 PSF	(G.E. OR DOW SEALANT)
GLAZING D:	+70/-70 PSF	(G.E. OR DOW SEALANT)

SEE GLAZING SCHEDULE ON SHEET 3 FOR GLAZING DESCRIPTION

GENERAL NOTES

1. THE SYSTEM DESCRIBED HEREIN HAS BEEN DESIGNED AND TESTED IN ACCORDANCE WITH THE 2007 FLORIDA BUILDING CODE, FOR USE WITHIN THE HIGH VELOCITY HURRICANE ZONE, PER TAS 201 / 202 / 203 & ASTM E1300-02 STANDARDS.
2. NO 33-1/3% INCREASE IN ALLOWABLE STRESS HAS BEEN USED IN THE DESIGN OF THIS SYSTEM. WIND LOAD DURATION FACTOR Cd=1.6 HAS BEEN USED FOR WOOD ANCHOR DESIGN.
3. POSITIVE AND NEGATIVE DESIGN PRESSURES CALCULATED FOR USE WITH THIS SYSTEM SHALL BE DETERMINED BY OTHERS ON A JOB-SPECIFIC BASIS IN ACCORDANCE WITH THE GOVERNING CODE.
4. MULTIPLE UNITS MUST BE INSTALLED USING MIAMI-DADE COUNTY BCCO-APPROVED STRUCTURAL MULLIONS.
5. THE SYSTEM DETAILED HEREIN IS GENERIC AND DOES NOT PROVIDE INFORMATION FOR A SPECIFIC SITE. FOR SITE CONDITIONS DIFFERENT FROM THE CONDITIONS DETAILED HEREIN, A LICENSED ENGINEER OR REGISTERED ARCHITECT SHALL PREPARE SITE SPECIFIC DOCUMENTS FOR USE IN CONJUNCTION WITH THIS DOCUMENT.
6. PERMIT HOLDER SHALL VERIFY THE ADEQUACY OF THE EXISTING STRUCTURE TO WITHSTAND SUPERIMPOSED LOADS. WOOD BUCKS (BY OTHERS) SHALL BE ANCHORED PROPERLY TO TRANSFER LOADS TO THE EXISTING STRUCTURE.
7. ALL EXTRUSIONS SHALL BE 6063-T5 OR 6063-T6 ALUMINUM ALLOY, UNLESS NOTED OTHERWISE.
8. UNITS GLAZED WITH 5/16" or 7/16" LAMINATED GLASS ARE LARGE MISSILE IMPACT RESISTANT AND DO NOT REQUIRE IMPACT RESISTANT SHUTTERS.
9. EXTERIOR SEAM OF FRAME CORNERS SHALL BE SEALED WITH SILICONE.
10. ALL BOLTS & WASHERS SHALL BE ZINC COATED STEEL, GALVANIZED STEEL, OR STAINLESS STEEL WITH A MINIMUM TENSILE YIELD STRENGTH OF 60 KSI.
11. ALL STEEL IN CONTACT WITH ALUMINUM SHALL BE PAINTED OR PLATED.

PRODUCT REVISED
as complying with the Florida Building Code
Acceptance No 09-0210.08
Expiration Date 10-17-2012
By Billy Harris
Miami Dade Product Control Division

FRANK L. BENNARDO, P.E.
PE0046549
FL
05/05/2009

ENGINEERING EXPRESS®
160 SW 12th AVENUE, #106
DEERFIELD BEACH, FL 33442
Ph: (954) 354-0660 Fax: (954) 354-0443
WWW.ENGEXP.COM
CERT OF AUTH #9885
A FRANK L. BENNARDO, P.E., INC. INNOVATION

TRACO Windows & Doors Inc.
71 Progress Avenue, Cranberry Township, PA 16166
Tel. (724) 776-7000

HR 242/542 (SERIES 140) ALUM. HORIZ. SLIDING WINDOW
LARGE MISSILE IMPACT RESISTANT
MIAMI-DADE NOTICE OF ACCEPTANCE

REMARKS	DRWN	CHKD	DATE
INIT ISSUE	KL	CL	12/20/06
2007 FBC	RKB	CL	02/05/09
PRODUCT NAME CHANGE	JAR	FLB	05/05/09

06-TRA-0006

SCALE: 01

PAGE DESCRIPTION:

4

1

05/05/2009 - 10:35am jaclynr F:\01 Project Files\Traco (TRA)\2006 Jobs\06-TRA-0006 HR-242,542, LMI (NOA)\06-TRA-0006_02a HR-242,542, LMI (NOA).dwg

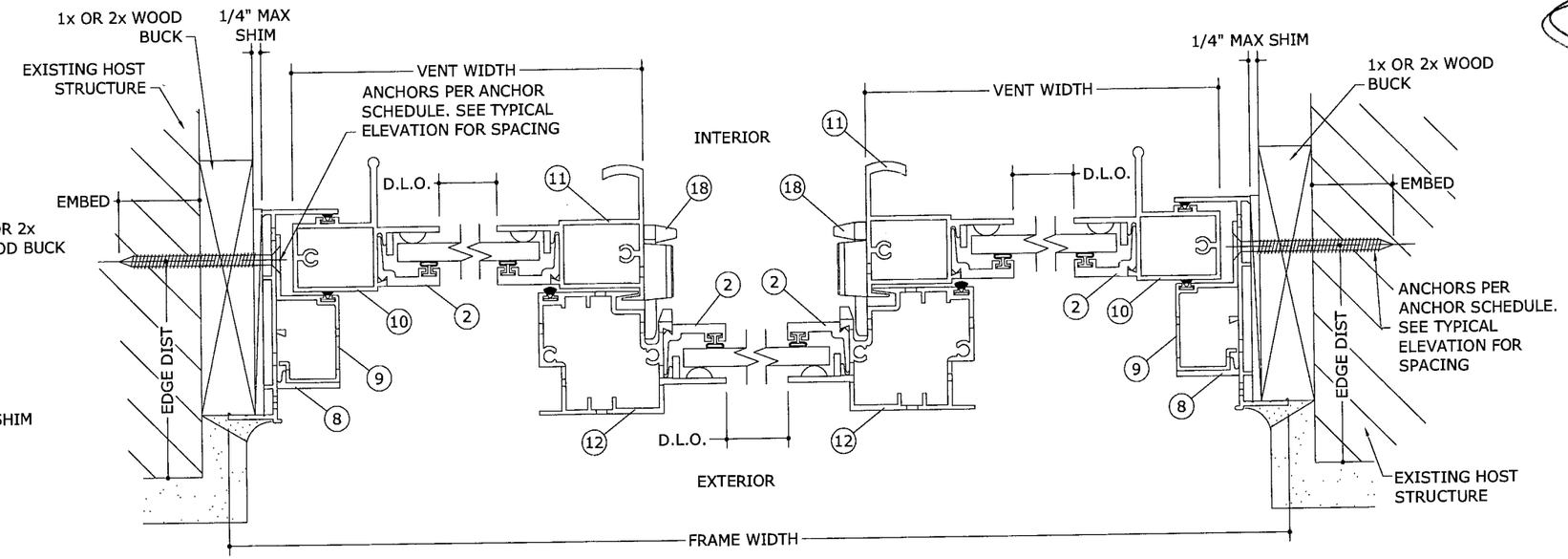

2/2 TYPICAL SECTION

N.T.S. HORIZONTAL SECTION

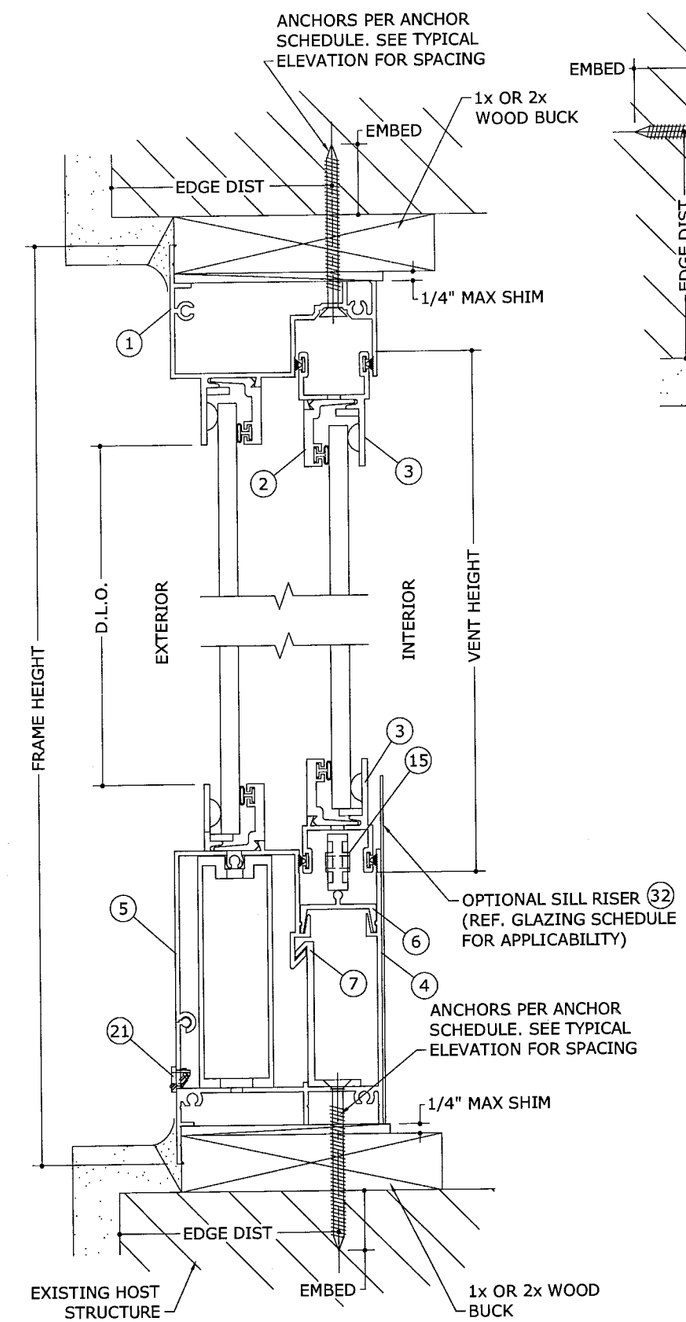

1/2 TYPICAL SECTION

N.T.S. VERTICAL SECTION

ANCHOR SCHEDULE:

TO HOLLOW BLOCK OR CONCRETE:

- 1/4" TAPCONS (ELCO OR ITW) THRU WOOD BUCKS OR DIRECTLY INTO MASONRY/ CONCRETE WITH 1-1/2" MIN EMBED.

TO WOOD BUCK OR HOST STRUCTURE:

- 1/4" TAPCONS (ELCO OR ITW) WITH 1-1/2" MIN THREAD PENETRATION.

TO STEEL OR 6063-T5 OR 6063-T6 ALUM MULLION OR HOST STRUCTURE:

- #14 SMS OR 1/4" SELF-DRILING METAL SCREWS (1/8" MIN THICKNESS).

ANCHOR NOTES:

1. SEE EXTERIOR ELEVATION FOR ANCHOR LOCATIONS AND/OR SPACING.
2. ANCHORS SHALL BE INSTALLED IN ACCORDANCE WITH MANUFACTURERS' RECOMMENDATIONS.
3. ENSURE MINIMUM 2-1/2" EDGE DISTANCE FOR ALL ANCHORS TO CONCRETE & TO HOLLOW BLOCK. EDGE DISTANCE OF 1/2" IS ACCEPTABLE FOR ANCHORS TO STEEL OR ALUMINUM.
4. WHERE ANCHORS FASTEN TO NARROW FACE OF STUD FRAMING, ANCHOR SHALL BE LOCATED IN CENTER OF NOMINAL 2x (MIN) WOOD STUD
5. WOOD HOST STRUCTURE SHALL BE "SOUTHERN PINE" G=0.55 OR GREATER DENSITY.
6. MINIMUM EMBEDMENT SHALL BE AS NOTED IN ANCHOR SCHEDULE. MINIMUM EMBEDMENT AND EDGE DISTANCE EXCLUDES STUCCO, FOAM, BRICK, AND OTHER WALL FINISHES.
7. WHERE EXISTING STRUCTURE IS WOOD FRAMING, EXISTING CONDITIONS MAY VARY. FIELD VERIFY THAT FASTENERS ARE INTO ADEQUATE WOOD FRAMING MEMBERS, NOT INTO PLYWOOD.
8. WOOD BUCKS (BY OTHERS) SHALL BE ANCHORED PROPERLY TO TRANSFER LOADS TO THE EXISTING STRUCTURE.

PRODUCT REVISED
as complying with the Florida Building Code
Acceptance No 09-0210.08
Expiration Date 10-17-2012
By Rita Harris
Miami Dade Product Control Division

FRANK L. BENNARDO, P.E.
PE0046549
05/05/2009

ENGINEERING EXPRESS®
160 SW 12th AVENUE, #106
DEERFIELD BEACH, FL 33442
PH: (954) 354-0660 FAX: (954) 354-0443
WWW.ENGEXP.COM
CERT OF AUTH #9885
A FRANK L. BENNARDO, P.E., INC. INNOVATION

TRACO Windows & Doors Inc.
71 Progress Avenue, Cranberry Township, PA 16166
Tel. (724) 776-7000

HR 242/542 (SERIES 140) ALUM. HORIZ. SLIDING WINDOW
LARGE MISSILE IMPACT RESISTANT
MIAMI-DADE NOTICE OF ACCEPTANCE

REMARKS	DRWN	CHKD	DATE
INIT ISSUE	KL	CL	12/20/06
2007 FBC	RKB	CL	02/05/09
PRODUCT NAME CHANGE	JAR	FLB	05/05/09

06-TRA-0006
SCALE: 01
PAGE DESCRIPTION:

4

2

05/05/2009 - 10:35am jaclynr F:\01 Project Files\Traco (TRA)\2006 Jobs\06-TRA-0006 HR-242,542, LMI (NOA)\06-TRA-0006_02a HR-242,542, LMI (NOA).dwg

BILL OF MATERIALS

ITEM#	DESCRIPTION	PART NUM.	ALLOY/TEMP	COMMENTS
1	FRAME HEAD	050-757	6063-T5	SEG-757 MILL FINISH
2	GLAZING BD.	050-759	6063-T5	SEG-749 MILL FINISH
3	SASH TOP & BOTTOM RAIL	050-570	6063-T5	SEG-570 MILL FINISH
4	MAIN FRAME SILL	050-737	6063-T5	SEG-737 MILL FINISH
5	SILL ADAPTER	050-738	6063-T5	SEG-738 MILL FINISH
6	SILL TRACK INSERT	050-739	6063-T5	SEG-739 MILL FINISH
7	SILL WINDLOAD ADAPTER	050-740	6063-T5	050-740 MILL FINISH
8	FRAME JAMB	050-572	6063-T5	SEG-572 MILL FINISH
9	JAMB ADAPTER	050-741	6063-T5	SEG-741 MILL FINISH
10	SASH SIDE RAIL	051-742	6063-T5	SEG-742 MILL FINISH
11	SASH MEETING RAIL	051-571	6063-T5	SEG-571 MILL FINISH
12	FIXED MEETING RAIL	051-573	6063-T5	SEG-573 MILL FINISH
13	FLAT BAR	050-004	------	3/16' X 1"
14	WHEEL HOUSING	014-005	------	------
15	WHEEL	014-044	0.750 DIA.	NAT. ACETAL
16	DOWEL PIN	015-041	------	0.150 DIA. X 0.550, BRASS
17	W'STRIPPING (AT SASH B & T RAIL)	047-014	FIN-SEAL	0.360 X 0.187 BACK
18	SWEEP LATCH	007-016	------	WHITE
19	W'STRIPPING	047-014	FIN-SEAL	0.360 X 0.187 BACK
20	SCREW AT MEETING RAILS	000-000	------	#10 X 2.000, PhPH SMS
21	WEEP COVERS	014-063	------	------
22	FRAME ASSEMBLY SCREW	012-835	------	#8 X 1.000, PhPH SMS
23	MEETING RAIL ASSEMBLY SCREW	012-130	------	#10 X 1.000, PhPH SMS
24	SASH ASSEMBLY SCREW	012-835	------	#8 X 1.000, PhPH SMS
25	SWEEP LATCH SCREW	012-830	STAINLESS STEEL	#8 X 0.750, PhPH SMS, SS
26	WINDLOAD ADAPTER SCREW	000-000	STAINLESS STEEL	(4) PER CLIP SAME AS INSTA. SCREWS
27	SEAM SEALER (AT FRAME, AT SASH)	024-019	------	SM 5504
28	SILICONE SEALANT (AT FXD., AT SASH)	024-043	------	DOW 1199 OR 995, OR TWO PART GE RGS7700
29	GLAZING BEAD GASKET (FXD, VT)	046-014	W'STP., BULB VINYL	WV-3134, BKL.
30	SETTING BLOCK	046-103	------	WV5848 SANTOPRENE
31	BUMPON SPACER	014-049	------	0.150, SJ-5306, CLR
32	SILL RISER	----	------	0.032 THK. X 4.6 SHT. BREAK METAL

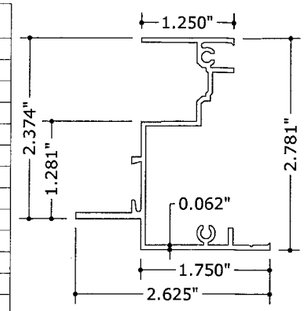

1 FRAME HEAD
6"=1'-0"

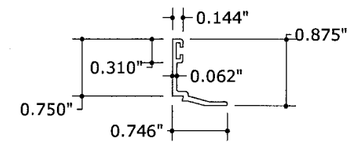

2 GLAZING BEAD
6"=1'-0"

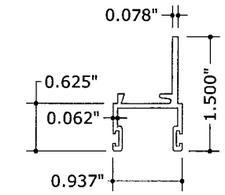

3 SASH TOP AND BOTTOM RAIL
6"=1'-0"

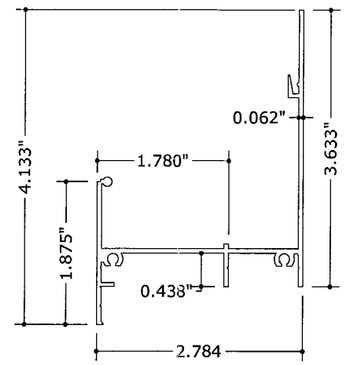

4 STANDARD SILL
6"=1'-0"

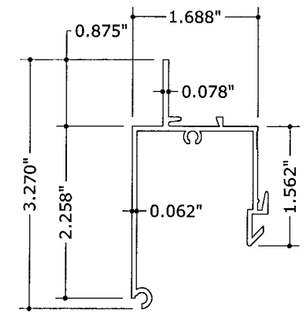

5 SILL ADAPTER
6"=1'-0"

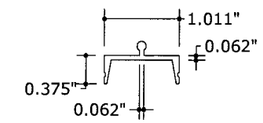

6 SILL TRACK INSERT
6"=1'-0"

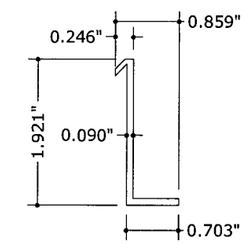

7 SILL WINDLOAD ADAPTER
6"=1'-0"

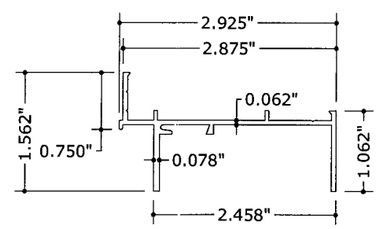

8 FRAME JAMB
6"=1'-0"

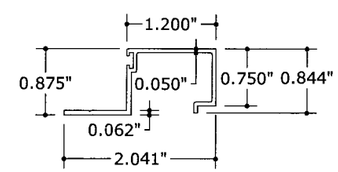

9 JAMB ADAPTER
6"=1'-0"

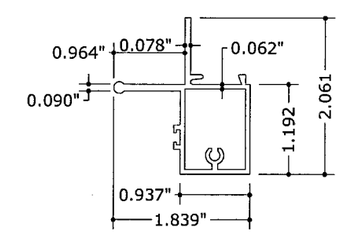

10 SASH SIDE RAIL
6"=1'-0"

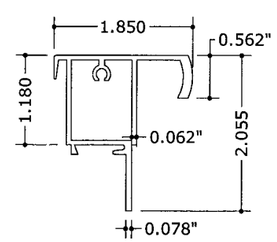

11 SASH MEETING RAIL
6"=1'-0"

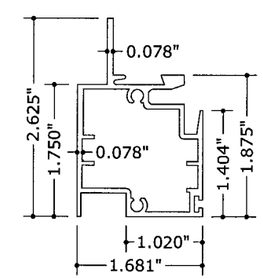

12 MEETING RAIL
6"=1'-0"

GLAZING DETAIL

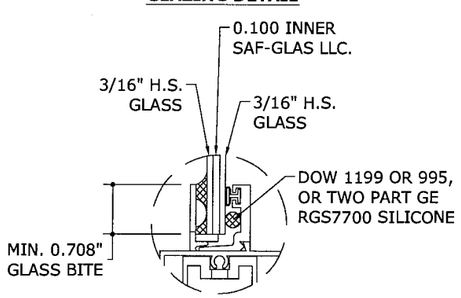

0.470" GLASS (GLAZING A & B)
LARGE MISSILE

GLAZING DETAIL

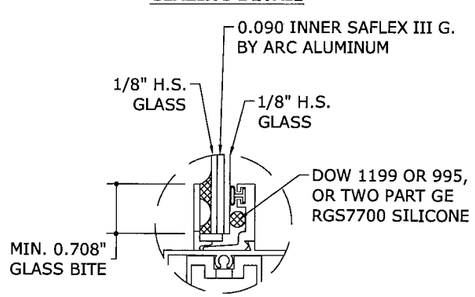

0.340" GLASS (GLAZING C)
LARGE MISSILE

GLAZING DETAIL

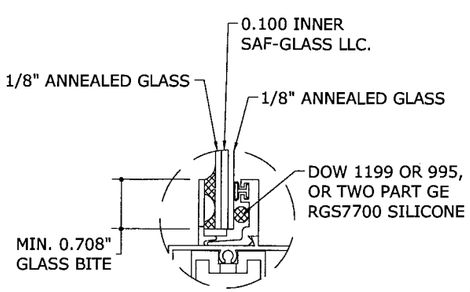

0.325" GLASS (GLAZING D)
LARGE MISSILE

GLAZING SCHEDULE:

GLAZING A, WITH **STANDARD SILL** (PART #4):
- 7/16" LAMINATED GLASS:
  3/16" H.S. - 0.100 INNER LAYER SAF-GLASS - 3/16" H.S. GLASS

GLAZING B, WITH **SILL RISER** (PARTS #4 & #32):
- 7/16" LAMINATED GLASS
  3/16" H.S. - 0.100 INNER LAYER SAF-GLASS - 3/16" H.S. GLASS

542 SYSTEM

GLAZING C:
- 5/16" LAMINATED GLASS
  1/8" H.S. - 0.090 INNER LAYER SAFLEX/KEEPSAFE - 1/8" H.S. GLASS

GLAZING D:
- 5/16" LAMINATED GLASS
  1/8" ANN. - 0.100 INNER LAYER SAF-GLASS - 1/8" ANN. GLASS

242 SYSTEM

PRODUCT REVISED
as complying with the Flori... Building Code
Acceptance No 09-0210.08
Expiration Date 10-17-2012
By Zity Harris
Miami Dade Product Control Division

FRANK L. BENNARDO, P.E.
PE0046549
05/05/2009

ENGINEERING EXPRESS®
160 SW 12th AVENUE, #106
DEERFIELD BEACH, FL 33442
Ph: (954) 354-0660 Fax: (954) 354-0443
WWW.ENGEXP.COM
CERT OF AUTH #9885
A FRANK L. BENNARDO, P.E., INC. INNOVATION

TRACO Windows & Doors Inc.
71 Progress Avenue, Cranberry Township, PA 16166
Tel. (724) 776-7000

HR 242/542 (SERIES 140) ALUM. HORIZ. SLIDING WINDOW
LARGE MISSILE IMPACT RESISTANT
MIAMI-DADE NOTICE OF ACCEPTANCE

REMARKS	DRWN	CHKD	DATE
INIT ISSUE	KL	CL	12/20/06
2007 FBC	RKB	CL	02/05/09
PRODUCT NAME CHANGE	JAR	FLB	05/05/09
-	-	-	-
-	-	-	-
-	-	-	-

06-TRA-0006
SCALE: 01
PAGE DESCRIPTION:

3 / 4

05/05/2009 - 10:35am jaclynr F:\01 Project Files\Traco (TRA)\2006 Jobs\06-TRA-0006 HR-242,542, LMI (NOA)\06-TRA-0006_02a HR-242,542, LMI (NOA).dwg

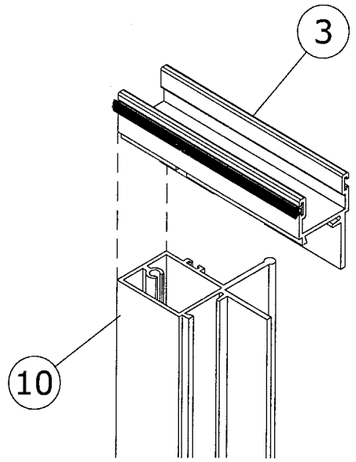

1/4 CORNER CONSTRUCTION
12" = 1'-0" ISOMETRIC VIEW

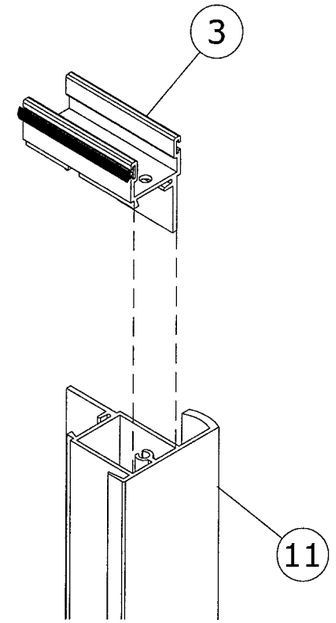

2/4 CORNER CONSTRUCTION
12" = 1'-0" ISOMETRIC VIEW

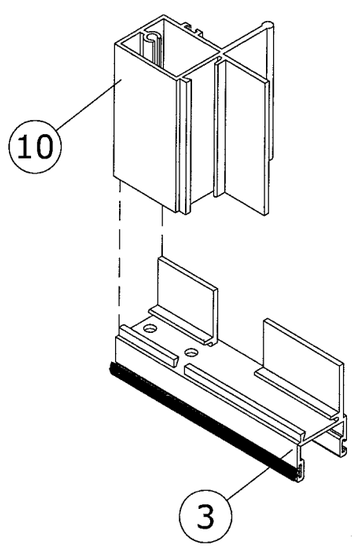

3/4 CORNER CONSTRUCTION
12" = 1'-0" ISOMETRIC VIEW

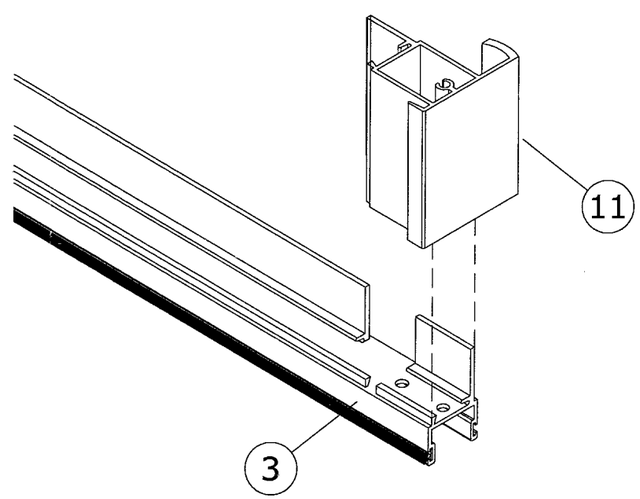

4/4 CORNER CONSTRUCTION
12" = 1'-0" ISOMETRIC VIEW

PRODUCT REVISED
as complying with the Florida
Building Code
Acceptance No 09-0210-08
Expiration Date 10-17-2012
By Fitz Harris
Miami Dade Product Control
Division

FRANK L. BENNARDO, P.E.
PE0046549
05/05/2009

ENGINEERING EXPRESS®
160 SW 12th AVENUE, #106
DEERFIELD BEACH, FL 33442
PH: (954) 354-0660 FAX: (954) 354-0443
WWW.ENGEXP.COM
CERT OF AUTH #9885
A FRANK L. BENNARDO, P.E., INC. INNOVATION

TRACO Windows & Doors Inc.
71 Progress Avenue,
Cranberry Township, PA 16166
Tel. (724) 776-7000

HR 242/542 (SERIES 140) ALUM. HORIZ. SLIDING WINDOW
LARGE MISSILE IMPACT RESISTANT
MIAMI-DADE NOTICE OF ACCEPTANCE

REMARKS	DRWN	CHKD	DATE
INIT ISSUE	KL	CL	12/20/06
2007 FBC	RKB	CL	02/05/09
PRODUCT NAME CHANGE	JAR	FLB	05/05/09
-	-	-	-
-	-	-	-

06-TRA-0006
SCALE: 01
PAGE DESCRIPTION:

4

05/05/2009 - 10:36am jaclynr F:\01 Project Files\Traco (TRA)\2006 Jobs\06-TRA-0006 HR-242,542, LMI (NOA)\06-TRA-0006_02a HR-242,542, LMI (NOA).dwg