MIAMI-DADE COUNTY
BUILDING CODE COMPLIANCE OFFICE (BCCO)
PRODUCT CONTROL DIVISION

MIAMI-DADE COUNTY, FLORIDA
METRO-DADE FLAGLER BUILDING
140 WEST FLAGLER STREET, SUITE 1603
MIAMI, FLORIDA 33130-1563
(305) 375-2901 FAX (305) 375-2908
www.miamidade.gov/buildingcode

NOTICE OF ACCEPTANCE (NOA)

Commercial Door International, Inc.
2412 Gelman Place
Tampa, Florida, 33619

SCOPE:

This NOA is being issued under the applicable rules and regulations governing the use of construction materials. The documentation submitted has been reviewed by Miami-Dade County Product Control Division and accepted by the Board of Rules and Appeals (BORA) to be used in Miami Dade County and other areas where allowed by the Authority Having Jurisdiction (AHJ).

This NOA shall not be valid after the expiration date stated below. The Miami-Dade County Product Control Division (In Miami Dade County) and/or the AHJ (in areas other than Miami Dade County) reserve the right to have this product or material tested for quality assurance purposes. If this product or material fails to perform in the accepted manner, the manufacturer will incur the expense of such testing and the AHJ may immediately revoke, modify, or suspend the use of such product or material within their jurisdiction. BORA reserves the right to revoke this acceptance, if it is determined by Miami-Dade County Product Control Division that this product or material fails to meet the requirements of the applicable building code.

This product is approved as described herein, and has been designed to comply with the Florida Building Code, including the High Velocity Hurricane Zone.

DESCRIPTION: Series "HC-5000 " Aluminum Outswing Door w/wo reinforced lock-stiles

APPROVAL DOCUMENT: Drawing No. **W08-94.**, titled "HC 5000 Series Aluminum Outswing Entrance Door", sheets 1 through 7 of 7, prepared by Al-Farooq Corporation, dated 12-03-08 and last revised on MAR 18, 2009, signed and sealed by Dr. Humayoun Farooq, P. E., bearing the Miami-Dade County Product Control Revision stamp with the Notice of Acceptance number and expiration date by the Miami-Dade County Product Control Division.

MISSILE IMPACT RATING: Large and Small Missile Impact

LABELING: Each unit shall bear a permanent label with the manufacturer's name or logo, city, state and following statement: "Miami-Dade County Product Control Approved", unless otherwise noted herein.

RENEWAL of this NOA shall be considered after a renewal application has been filed and there has been no change in the applicable building code negatively affecting the performance of this product.

TERMINATION of this NOA will occur after the expiration date or if there has been a revision or change in the materials, use, and/or manufacture of the product or process. Misuse of this NOA as an endorsement of any product, for sales, advertising or any other purposes shall automatically terminate this NOA. Failure to comply with any section of this NOA shall be cause for termination and removal of NOA.

ADVERTISEMENT: The NOA number preceded by the words Miami-Dade County, Florida, and followed by the expiration date may be displayed in advertising literature. If any portion of the NOA is displayed, then it shall be done in its entirety.

INSPECTION: A copy of this entire NOA shall be provided to the user by the manufacturer or its distributors and shall be available for inspection at the job site at the request of the Building Official.

This NOA **revises NOA # 07-116.02 (#07-0423.02)** and consists of this page 1 and evidence page E-1 & E-2, as well as approval document mentioned above.

The submitted documentation was reviewed by **Ishaq I. Chanda, P. E.**

MIAMI-DADE COUNTY APPROVED

NOA No 09-0212.02
Expiration Date: April 18, 2012
Approval Date: June 17, 2009

6/16/9

NOTICE OF ACCEPTANCE: EVIDENCE SUBMITTED

A. DRAWINGS

1. Manufacturer's die drawings and sections.
2. Drawing No. **W08-94**., titled "HC 5000 Series Aluminum Outswing Entrance Door", sheets 1 through 7 of 7, prepared by Al-Farooq Corporation, dated 12-03-08 and last revised on MAR 18, 2009, signed and sealed by Dr. Humayoun Farooq, P. E.

B. TESTS

1. Test reports on 1) Air Infiltration Test, per FBC, TAS 202-94
   2) Uniform Static Air Pressure Test, Loading per FBC TAS 202-94
   3) Water Resistance Test, per FBC, TAS 202-94

   Along with installation diagram of aluminum outswing doors prepared by Fenestration Testing Lab, Test Report No. FTL-5732 dated 11/13/08 and revised on 04/09/09 signed and sealed by Michael Wenzel, P.E.
2. Test reports on 1) Air Infiltration Test, per FBC, TAS 202-94
   2) Uniform Static Air Pressure Test, Loading per FBC TAS 202-94
   3) Water Resistance Test, per FBC, TAS 202-94
   4) Large Missile Impact Test per FBC, TAS 201-94
   5) Cyclic Wind Pressure Loading per FBC, TAS 203-94
   6) Forced Entry Test, per FBC 2411 3.2.1 and TAS 202-94

   Along with installation diagram of aluminum outswing doors prepared by Architectural Testing, Test Report No. 72643.01-401-18 dated 06/05/07 and revised on 02/21/08, 06/23/08 and 06/25/08 signed and sealed by Joseph A. Reed, P.E. (transferred from file #07-116.02)
3. Additional test report No. CTLA 1373W dated 06-17-05, issued by issued by Certified Testing Lab per TAS 201, 202 and 203-94, signed and sealed by Ramesh Patel, P.E.(transferred from file # **07-0423.02)**

C. CALCULATIONS

1. Anchor calculations and structural analysis, complying w/ FBC 2007, prepared by Al-Farooq Corporation, dated Jan. 16, 2009 and revised on Mar 24, 2009, signed and sealed by Dr. Humayoun Farooq, P. E.
2. Glazing complies w/ ASTME-1300-02 & -04

D. QUALITY ASSURANCE

1. Miami Dade Building Code Compliance Office (BCCO).

E. MATERIAL CERTIFICATIONS

1. Notice of Acceptance No. **07-1116.04** issued to E.I. Dupont De Nemours & CO., Inc. for "DuPont SentryGlas ® Plus", expiring on 01/14/2012.
2. Notice of Acceptance No. **06-0216.06** issued to Solutia, for "Saflex IIIG clear & color interlayer", expiring on 05/21/2011.
3. Notice of Acceptance No. **09-0310.02** (**#03-1223.04,** Former Surface Specialties Technologies Inc.), issued to Cytec Industries Inc. for "Uvekol Laminated glass, expiring on 02/08/2010.

Ishaq I. Chanda

Ishaq I. Chanda, P. E.
Product Control Examiner
NOA No 09-0212.02
Expiration Date: April 18, 2012
Approval Date: June 17, 2009

NOTICE OF ACCEPTANCE: EVIDENCE SUBMITTED

F. STATEMENTS

1. Letter of conformance and "No financial interest", dated 01/15/09 signed & sealed by Dr. Humayoun Farooq, P.E.
2. Addendum letter dated April 29, 2009, issued by Fenestration Testing Lab.
3. Addendum letter dated Jan 31, 2008, issued by Architectural lab, signed and sealed by Joseph A. Reed, P.E.
4. Statement letter of compliance, as part of above referenced test reports, issued by the above referenced test labs.

G. OTHER

1. This NOA **revises NOA # 07-116.02 (NOA # 07-0423.02)**, expiring 04-18-2012.
2. Test proposal #07-2522 dated April 03, 2007 and e-mail test proposal dated Sep. 04, 2008 approved by BCCO.

Ishaq I. Chanda

Ishaq I. Chanda, P. E.
Product Control Examiner
NOA No 09-0212.02
Expiration Date: April 18, 2012
Approval Date: June 17, 2009

D.L.O. HEIGHT = LEAF HEIGHT – 12.250"
D.L.O. WIDTH = LEAF WIDTH – 10"
LEAF HEIGHT = FRAME HEIGHT – 2.875"

SERIES-HC5000 (WATER RESISTANT W/ ADA SILL) ALUMINUM OUTSWING ENTRANCE DOOR

SEE CHART ON SHEET 2 FOR DESIGN LOAD CAPACITY OF VARIOUS GLASS TYPES AND STANDARD OR REINFORCED LOCK STILES.

THIS DOOR WITH FRAME CAN BE INSTALLED INTO COMMERCIAL DOOR STOREFRONT SYSTEM THAT HAVE MULLION TESTED TO THE TRIBUTARY LOAD OF THIS DOOR
FOR DOORS WITH STOREFRONT SYSTEM SEE SEPARATE NOA.
LOWER DESIGN PRESSURES FROM DOOR APPROVAL OR STOREFRONT NOA WILL APPLY TO ENTIRE SYSTEM.
SUCH INSTALLATION TO BE REVIEWED AND APPROVED BY AUTHORITY HAVING JURISDICTION.

DOORS APPROVED FOR INSTALLATIONS WHERE WATER INFILTRATION RESISTANCE IS REQUIRED.

THIS PRODUCT HAS BEEN DESIGNED AND TESTED TO COMPLY WITH THE REQUIREMENTS OF THE FLORIDA BUILDING CODE 2004/2007 EDITION INCLUDING HIGH VELOCITY HURRICANE ZONE (HVHZ).

WOOD BUCKS BY OTHERS, MUST BE ANCHORED PROPERLY TO TRANSFER LOADS TO THE STRUCTURE.

ANCHORS SHALL BE AS LISTED, SPACED AS SHOWN ON DETAILS, ANCHORS EMBEDMENT TO BASE MATERIAL SHALL BE BEYOND WALL DRESSING OR STUCCO.

ANCHORING OR LOADING CONDITIONS NOT SHOWN IN THESE DETAILS ARE NOT PART OF THIS APPROVAL.

A LOAD DURATION INCREASE IN ALLOWABLE STRESS IS USED IN DESIGN OF ANCHORS INTO WOOD ONLY.

MATERIALS INCLUDING BUT NOT LIMITED TO STEEL/METAL SCREWS, THAT COME INTO CONTACT WITH OTHER DISSIMILAR MATERIALS SHALL MEET THE REQUIREMENTS OF 2004/2007 FLORIDA BLDG. CODE SECTION 2003.8.4.

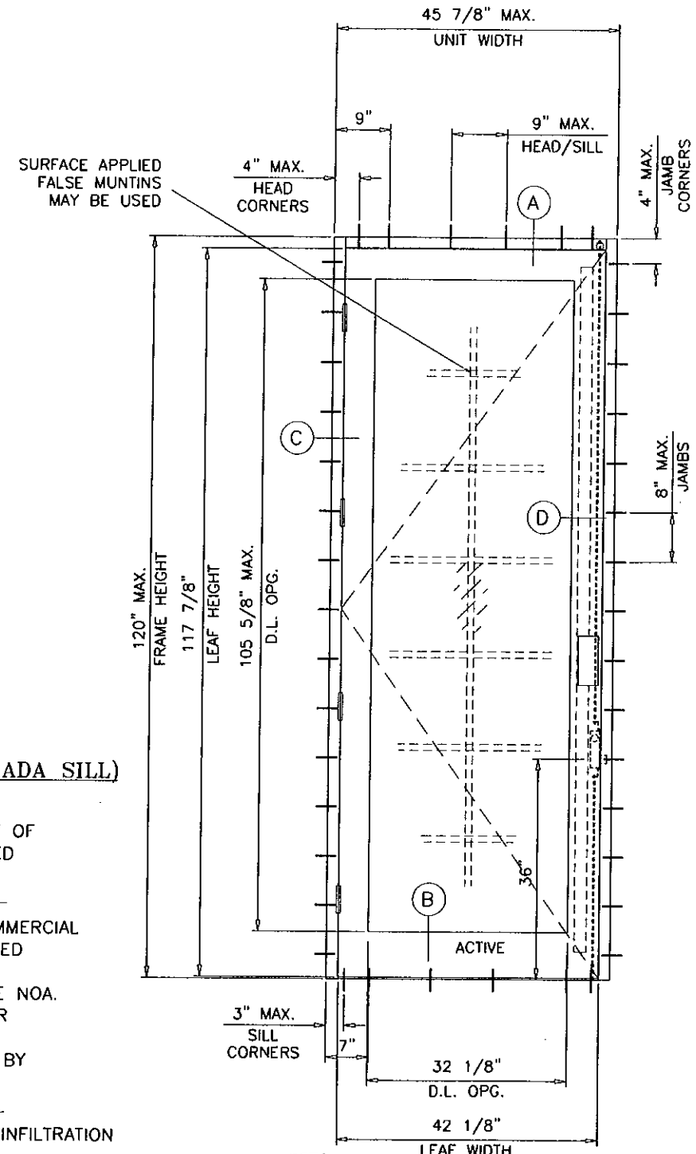

(X)

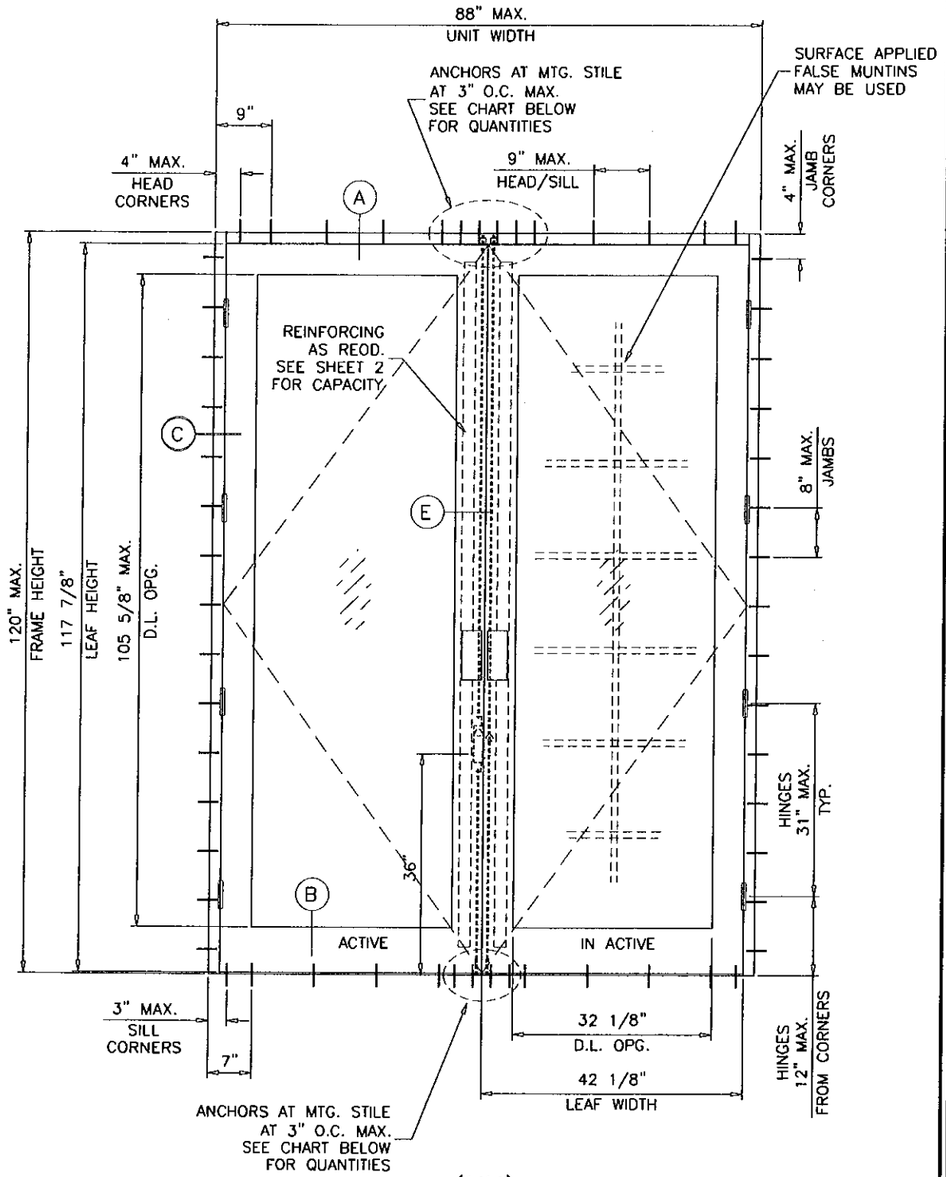

(XX)

TYPICAL ELEVATIONS

THESE DOORS ARE RATED FOR LARGE & SMALL MISSILE IMPACT. SHUTTERS ARE NOT REQUIRED.

PRODUCT REVISED
as complying with the Florida
Building Code
Acceptance No. 09-0212.02
Expiration Date 04/18/2012
By Ishaq I. Chanda
Miami-Dade Product Control
Division

DESIGN LOAD PSF	DOOR HEIGHT INCHES	NO. OF ANCHORS AT MTG. STILE ENDS				
		INTO WOOD STRUCTURES		INTO CONCRETE		INTO METAL STRUCTURES
		1/4" DIA. ULTRACONS	1/4" DIA. KWIKCON	1/4" DIA. ULTRACONS	1/4" DIA. KWIKCON	1/4" DIA. TEKS
100.0	120	6	6	6	6	6
110.0	96	6	6	6	6	6
	120	8	8	8	8	8

Engr.: DR. HUMAYOUN FAROOQ
STRUCTURES.
FLA. PE # 16557
C.A.N. 3538

MAR 18 2009

AL-FAROOQ CORPORATION
ENGINEERS & PRODUCT DEVELOPMENT
1235 S.W. 87 AVE
MIAMI, FLORIDA 33174
TEL (305) 264-8100 FAX. (305) 262-6978
COMP-ANL\W08-94CDI

SERIES-HC5000 ALUM OUTSWING ENTRANCE DOOR (L.M.I.)

COMMERCIAL DOOR INTL. INC.
2412 SOUTH GELMAN PLACE
TAMPA, FL. 33619
TEL. (813) 247-7700 FAX. (813) 247-7771

revisions:

no	date	by	description
A	03.16.09		REV. PER BCCO COMMENTS

date: 12-03-08
scale: 1/2"=1'-0"
dr. by: HAMID
chk. by:

drawing no.
W08-94

sheet 1 of 7

NOTE:
GLASS CAPACITIES ON THIS SHEET ARE
BASED ON ASTM E1300-02/04 (3 SEC. GUSTS)
AND FLORIDA BUILDING COMMISSION
DECLARATORY STATEMENT DCA05-DEC-219

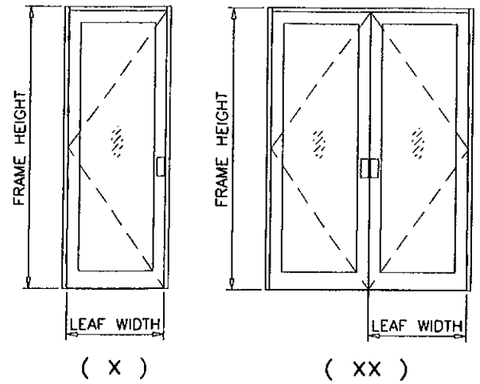

DESIGN LOAD CAPACITY - PSF SINGLE (X) OR DOUBLE (XX) ENTRANCE DOORS							
NOMINAL DIMS.		STD. LOCK STILE				REINFORCED LOCK STILES	
		GLASS TYPE 'A' & 'B'		GLASS TYPE 'C'		GLASS TYPE 'D', 'E' & 'F'	
LEAF WIDTH INCHES	FRAME HEIGHT INCHES	EXT.(+)	INT.(-)	EXT.(+)	INT.(-)	EXT.(+)	INT.(-)
30"	80"	100.0	100.0	100.0	100.0	110.0	110.0
36"		100.0	100.0	100.0	100.0	110.0	110.0
42"		100.0	100.0	100.0	100.0	110.0	110.0
30"	84"	100.0	100.0	100.0	100.0	110.0	110.0
36"		100.0	100.0	100.0	100.0	110.0	110.0
42"		100.0	100.0	100.0	100.0	110.0	110.0
30"	90"	100.0	100.0	100.0	100.0	110.0	110.0
36"		100.0	100.0	100.0	100.0	110.0	110.0
42"		100.0	100.0	100.0	100.0	110.0	110.0
30"	96"	100.0	100.0	100.0	100.0	110.0	110.0
36"		100.0	100.0	100.0	100.0	110.0	110.0
42"		100.0	100.0	100.0	100.0	110.0	110.0
30"	102"	-	-	100.0	100.0	110.0	110.0
36"		-	-	100.0	100.0	110.0	110.0
42"		-	-	100.0	100.0	110.0	110.0
30"	108"	-	-	100.0	100.0	110.0	110.0
36"		-	-	100.0	100.0	110.0	110.0
42"		-	-	100.0	100.0	110.0	110.0
30"	114"	-	-	100.0	100.0	110.0	110.0
36"		-	-	100.0	100.0	110.0	110.0
42"		-	-	100.0	100.0	110.0	110.0
30"	120"	-	-	100.0	100.0	110.0	110.0
36"		-	-	100.0	100.0	110.0	110.0
42"		-	-	100.0	100.0	110.0	110.0

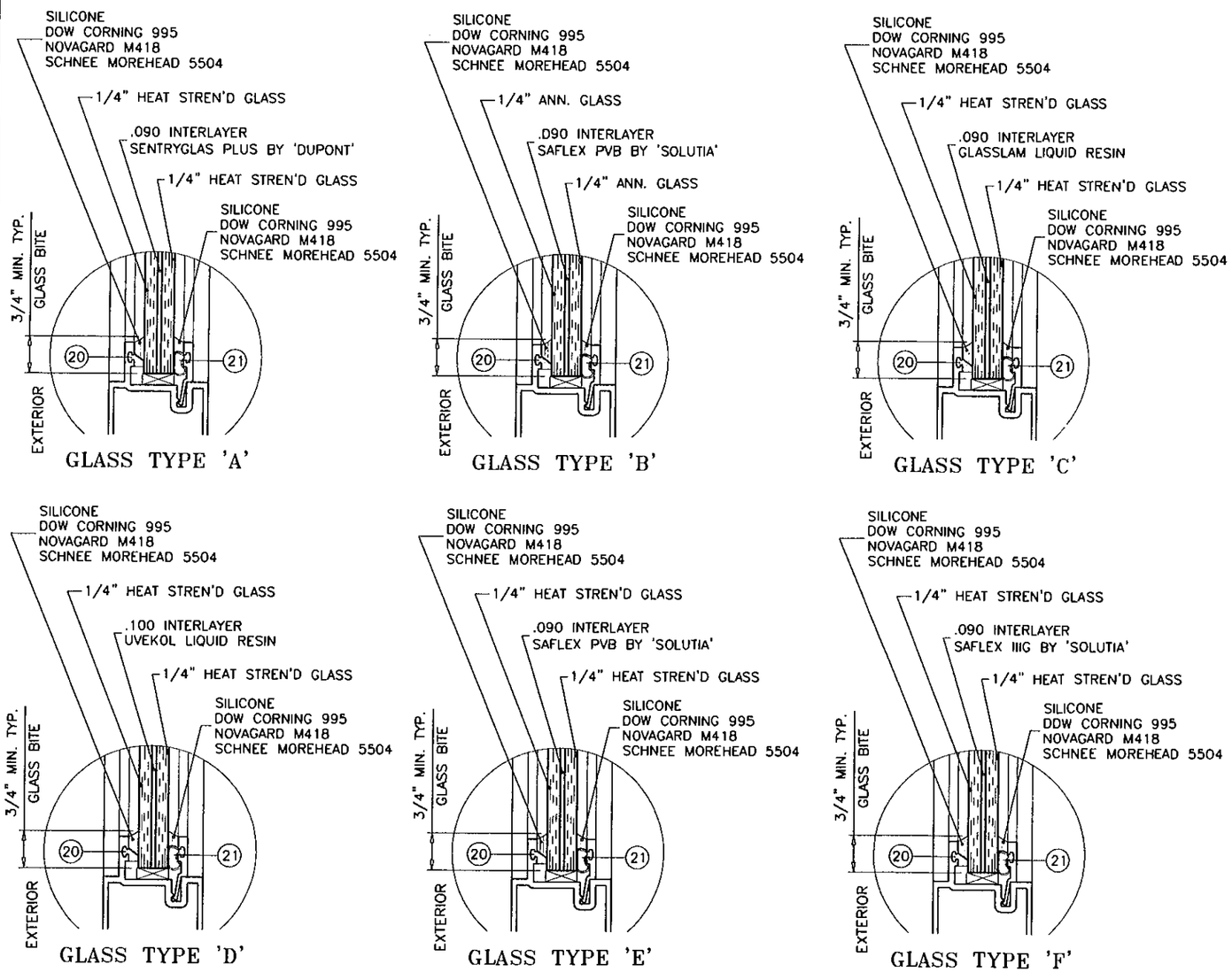

GLAZING OPTIONS

STD. LOCK STILES

REINFORCED LOCK STILES

PRODUCT REVISED
as complying with the Florida Building Code
Acceptance No. 09-0212.02
Expiration Date 04/18/2012
By Shaq L. Chanda
Miami Dade Product Control Division

Engr: DR. HUMAYOUN FAROOQ
STRUCTURES
FLA. PE # 16557
C.A.N. 3538

MAR 1 8 2009

AL-FAROOQ CORPORATION
ENGINEERS & PRODUCT DEVELOPMENT
1235 S.W. 87 AVE
MIAMI, FLORIDA 33174
TEL. (305) 264-8100 FAX. (305) 262-6978

COMP-ANL\W08-94CDI

SERIES-HC5000 ALUM OUTSWING ENTRANCE DOOR (L.M.I.)

COMMERCIAL DOOR INTL. INC.
2412 SOUTH GELMAN PLACE
TAMPA, FL. 33619
TEL. (813) 247-7700 FAX. (813) 247-7771

revisions:

no	date	by	description
A	03.16.09		REV. PER BCCO COMMENTS

date: 12-03-08
scale: 3/8" = 1"
dr. by: HAMID
chk. by:

drawing no.
W08-94

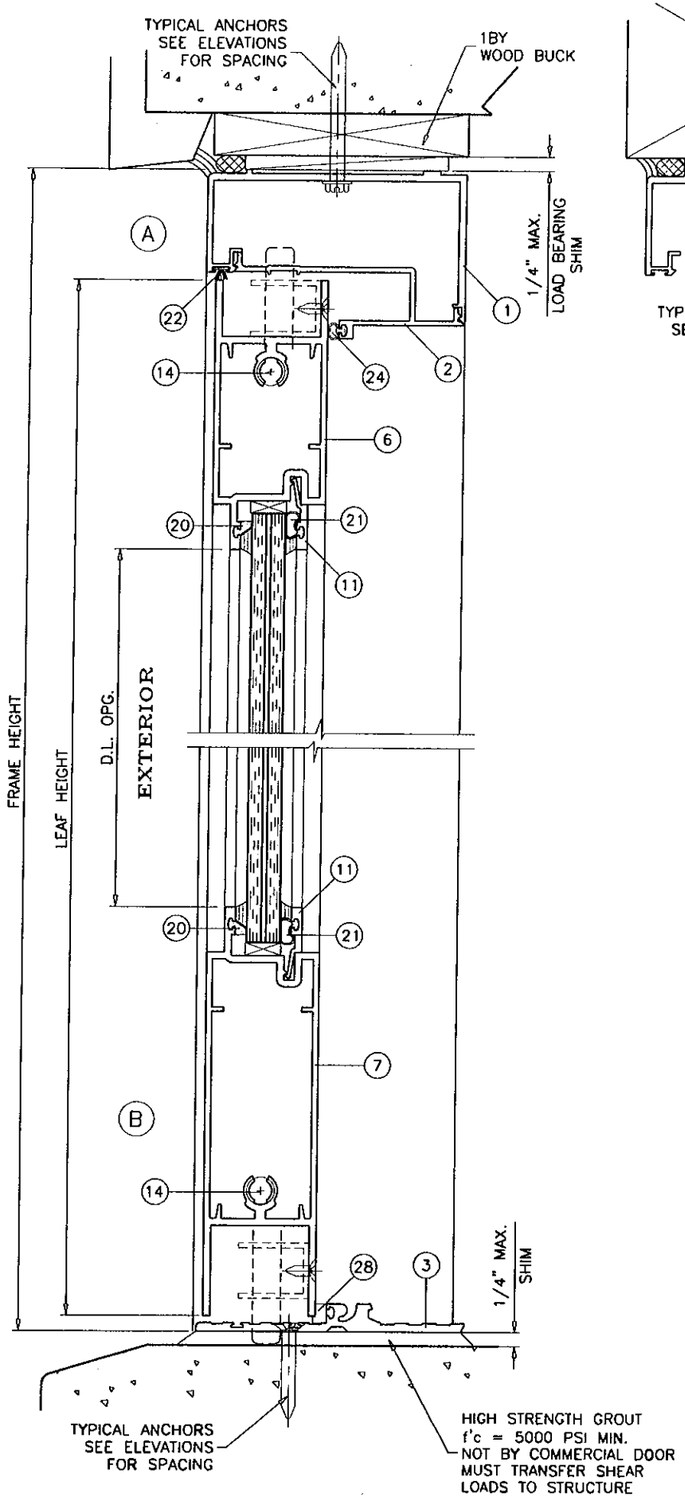

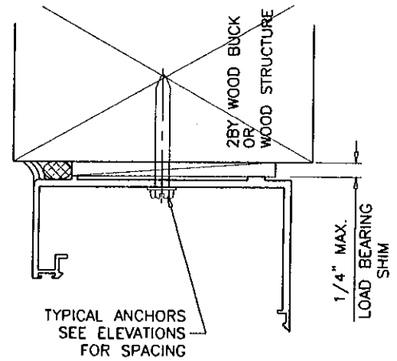

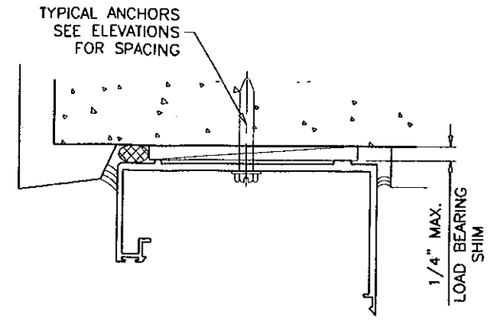

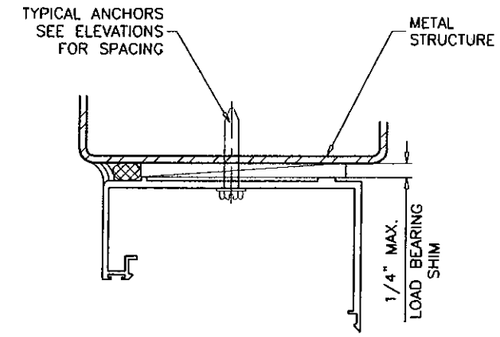

WOOD BUCKS AND METAL STRUCTURES NOT BY COMMERCIAL DOOR MUST SUSTAIN LOADS IMPOSED BY GLAZING SYSTEM AND TRANSFER THEM TO THE BUILDING STRUCTURE.

TYPICAL ANCHORS: SEE ELEV. FOR SPACING

TYPE 'A'– 1/4" DIA. ULTRACON BY 'ELCO' (Fu=177 KSI, Fy=155 KSI)
OR 1/4" DIA. HILTI KWIK-CON II (Fu=163 KSI, Fy=157 KSI)
INTO 2BY WOOD BUCKS OR WOOD STRUCTURES
1-3/8" MIN. PENETRATION INTO WOOD

THRU 1BY BUCKS INTO CONC. OR MASONRY
1-1/4" MIN. EMBED INTO CONC. OR MASONRY

TYPE 'B'– 1/4" DIA. ULTRACON BY 'ELCO' (Fu=177 KSI, Fy=155 KSI)
OR 1/4" DIA. HILTI KWIK-CON II (Fu=163 KSI, Fy=157 KSI)
DIRECTLY INTO CONC. OR MASONRY
1-3/8" MIN. EMBED INTO CONC. OR MASONRY

TYPE 'C'– 1/4" DIA. TEKS OR SELF DRILLING SCREWS (GRADE 5 CRS)
INTO METAL STRUCTURES
INTO MIAMI-DADE COUNTY APPROVED MULLIONS
STEEL : 12 GA. MIN. (Fy = 36 KSI MIN.)
ALUMINUM : 1/8" THK. MIN. (6063-T5 MIN.)
(STEEL IN CONTACT WITH ALUMINUM TO BE PLATED OR PAINTED)

TYPICAL EDGE DISTANCE

INTO CONCRETE AND MASONRY = 2-1/2" MIN.
INTO WOOD STRUCTURE = 1" MIN.
INTO METAL STRUCTURE = 3/4" MIN.

CONCRETE f'c = 3000 PSI MIN.
MASONRY f'm = 1500 PSI MIN.

PRODUCT REVISED
as complying with the Florida
Building Code
Acceptance No 09-0212.02
Expiration Date 04/18/2012
By Ishaq I. Chanda
Miami Dade Product Control
Division

SEALANTS:

ALL FRAME AND LEAF CORNERS, HEADS OF INSTALLATION SCREWS AT SILL AND ALL METAL PARTS CONNECTIONS SEALED WITH SILICONE.

Engr: DR. HUMAYOUN FAROOQ
STRUCTURES
FLA. PE # 16557
C.A.N. 3538

MAR 18 2009

AL-FAROOQ CORPORATION
ENGINEERS & PRODUCT DEVELOPMENT
1235 S.W. 87 AVE
MIAMI, FLORIDA 33174
TEL. (305) 264-8100 FAX. (305) 262-6978

COMP-ANL\W08-94CDI

SERIES-HC5000 ALUM OUTSWING ENTRANCE DOOR (L.M.I.)

COMMERCIAL DOOR INTL. INC.
2412 SOUTH GELMAN PLACE
TAMPA, FL. 33619
TEL. (813) 247-7700 FAX. (813) 247-7771

revisions:

no	date	by	description
A	03.16.09		REV. PER BCCO COMMENTS

date: 12-03-08
scale: 3/8" = 1"
dr. by: HAMID
chk. by:

drawing no.
W08-94

sheet 3 of 7

LOCKS:

STD. 3 POINT LOCK
MAX. FRAME HEIGHT = 120 IN.
MAX. LEAF WIDTH = 42 IN.
MAX. DESIGN LOAD = 120 PSF

ACTIVE LEAF:

THREE POINT LOCK SYSTEM WITH 8 PLY HOOK LOCK BOLT BY 'ADAMS RITE MS1850S' KEY OPERATED ON EXTERIOR AND THUMB-TURN ON INTERIOR, LOCATED AT 36" FROM BOTTOM OF PANEL

INACTIVE LEAF:

MANUALLY OPERATED TWO POINT LOCK SYSTEM BY 'ADAMS RITE MS1880/1881' WITH CONCEALED FLUSH BOLTS AT TOP & BOTTOM OF LOCK STILE AND A THUMB TURN ON THE INTERIOR, LOCATED AT 36" FROM BOTTOM OF PANEL

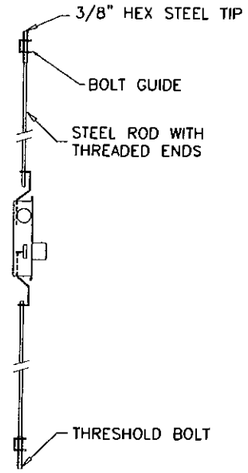

ITEM NO.	PART NO.	QUANTITY	DESCRIPTION	MATERIAL	MANF./SUPLIER/REMARKS
1	FS-01059	1	FRAME HEAD	6063-T6	-
2	FS-01058	1	FRAME HEAO INSERT	6063-T6	-
3	FS-03739	1	HANDICAP THRESHOLD	6063-T6	-
4	FS-01055	2	FRAME JAMB	6063-T6	-
5	FS-01064	2	FRAME JAMB INSERT	6063-T6	-
6	FH-01062	1/ LEAF	TOP RAIL	6063-T6	-
7	FH-01063	1/ LEAF	BOTTOM RAIL	6063-T6	-
8	FH-01054	1/ LEAF	HINGE STILE	6005-T5	-
9	FH-01057	1/ LEAF	ACTIVE LOCK STILE	6005-T5	-
10	-	1/ LEAF	INACTIVE LOCK STILE	6063-T5	-
11	FS-01056	4/ LEAF	GLASS STOP	6063-T6	-
12	FISA-2992	AS REQD.	LOCK STILE REINFORCING	ALUMINUM	-
13	-	2/ CORNER	FRAME ASSEMBLY SCREWS	STEEL	#14 X 1-1/2" FH
14	1/2" X 2-3/4"	4/ LEAF	LEAF ASSEMBLY SCREW	-	HEX HEAD M. BOLT
15	-	4/ LEAF	HINGE	ST. STEEL	HAGER
16	-	2/ HINGE	HINGE BACK UP PLATE	ALUMINUM	1/4" X 1-1/4" X 4-1/8" LONG
17	-	1/ HINGE	HINGE BACK UP TUBE	ALUMINUM	12" LONG
18	# 12 X 1/2"	8/ HINGE	HINGE INSTALLATION SCREWS	-	FLAT HEAD MS
20	-	AS REQD.	GLAZING LEG SPACER	VINYL	-
21	-	AS REQD.	GLAZING BEAD GASKET	VINYL	-
22	-	AS REQD.	PILE W'STRIPPING WITH FIN (.300 H.)	-	-
23	-	AS REQD.	BULB W'STRIPPING (.195 X .57D)	VINYL	WIBORG
24	-	AS REQD.	BULB W'STRIPPING (.190 X .375)	VINYL	SCHLEGEL
25	V-065	AS REQD.	PEROXIDE THREAD-IN FINGER (VINYL FLAP)	VINYL	TREMCO
26	-	AS REQD.	1/4" X 3/8" CLOSED CELL FOAM	-	-
27	-	AS REQD.	1/4" X 3/8" X 7-1/2" CLOSED CELL FOAM	-	AT BOTTOM OF LOCK STILE
28	-	AS REQD.	1/4" X 7/16" CLOSED CELL FOAM	-	-

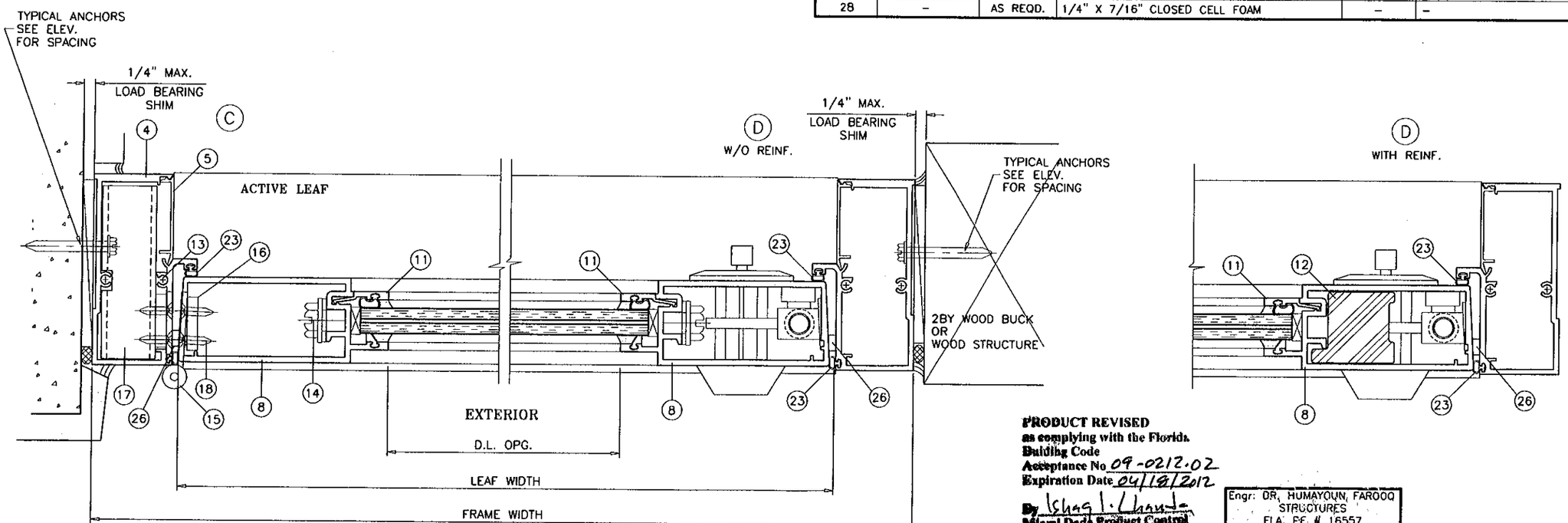

PRODUCT REVISED
as complying with the Florida Building Code
Acceptance No 09-0212.02
Expiration Date 04/18/2012
By Ishaq I. Chanda
Miami Dade Product Control Division

Engr: DR. HUMAYOUN, FAROOQ
STRUCTURES
FLA. RE # 16557
C.A.N. 3538

MAR 18 2009

AL-FAROOQ CORPORATION
ENGINEERS & PRODUCT DEVELOPMENT
1235 S.W. 87 AVE
MIAMI, FLORIDA 33174
TEL. (305) 264-8100 FAX. (305) 262-6978

COMP-ANL\W08-94CDI

SERIES-HC5000 ALUM OUTSWING ENTRANCE DOOR (L.M.I.)

COMMERCIAL DOOR INTL. INC.
2412 SOUTH GELMAN PLACE
TAMPA, FL. 33619
TEL. (813) 247-7700 FAX. (813) 247-7771

revisions:

no	date	by	description
A	03.16.09		REV. PER BCCO COMMENTS

date: 12-03-08
scale: 3/8" = 1"
dr. by: HAMID
chk. by:

drawing no.
W08-94

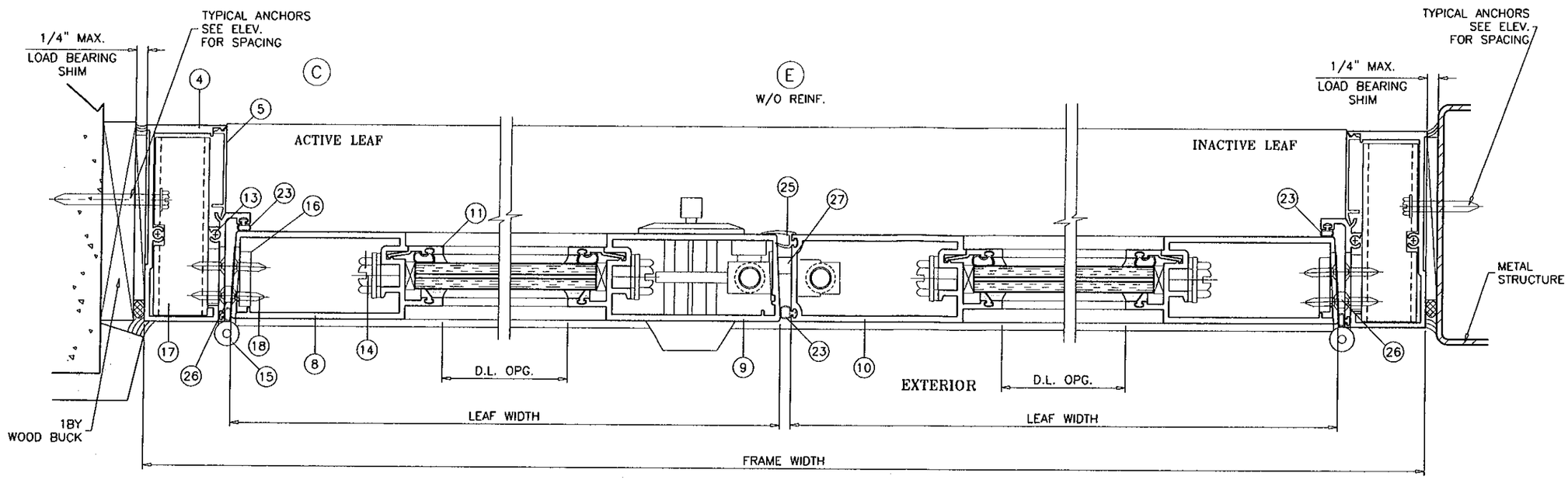

E
WITH REINF.

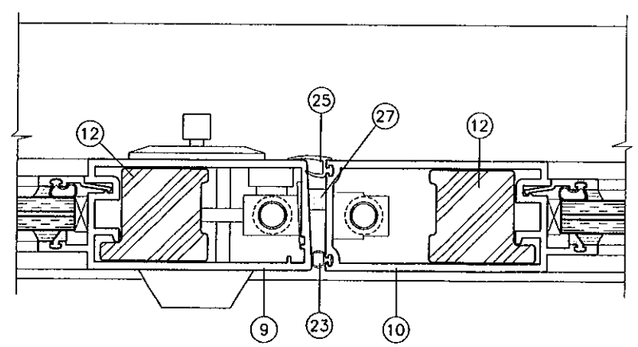

PRODUCT REVISED
as complying with the Florida
Building Code
Acceptance No 09-0212.02
Expiration Date 04/19/2012
By Ishaq I. Chanda
Miami Dade Product Control
Division

Engr: DR. HUMAYOUN FAROOQ
STRUCTURES
FLA. PE # 16557
C.A.N. 3538

MAR 18 2009

AL-FAROOQ CORPORATION
ENGINEERS & PRODUCT DEVELOPMENT
1235 S.W. 87 AVE
MIAMI, FLORIDA 33174
TEL. (305) 264-8100 FAX. (305) 262-6978

COMP-ANL\W08-94CDI

SERIES-HC5000 ALUM OUTSWING ENTRANCE DOOR (L.M.I.)

COMMERCIAL DOOR INTL. INC.
2412 SOUTH GELMAN PLACE
TAMPA, FL. 33619
TEL. (813) 247-7700 FAX. (813) 247-7771

revisions:

no	date	by	description
A	03.16.09		REV. PER BCCO COMMENTS

date: 12-03-08
scale: 3/8" = 1"
dr. by: HAMID
chk. by:

drawing no.
W08-94

sheet 5 of 7

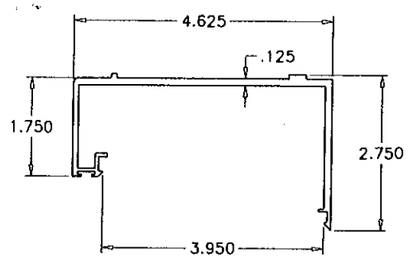

(1) FRAME HEAD

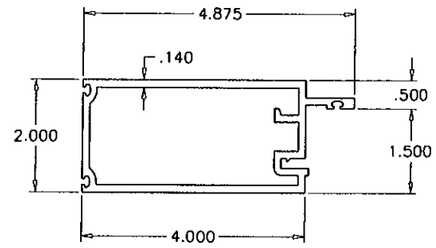

(9) ACTIVE LOCK STILE

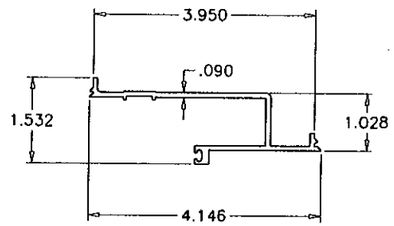

(2) FRAME HEAD INSERT

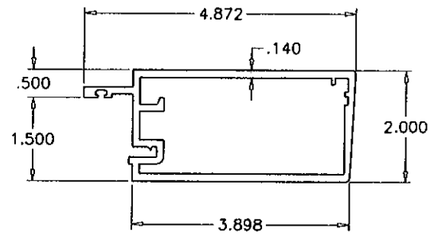

(8)(10) HINGE STILE/INACTIVE LOCK STILE

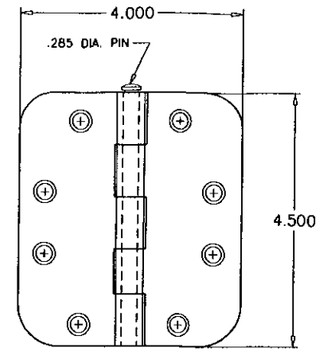

(15) .134" THICK STEEL HINGE

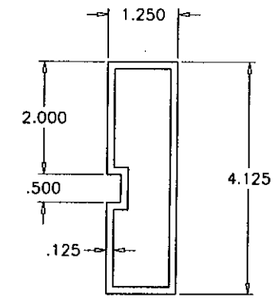

(17) HINGE BACK UP TUBE

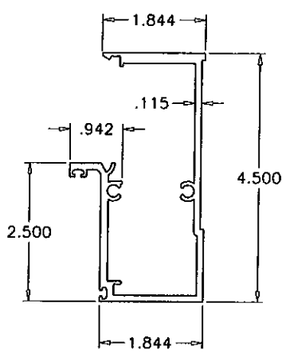

(4) FRAME JAMB

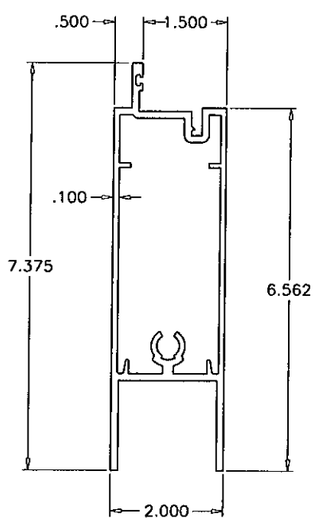

(7) BOTTOM RAIL

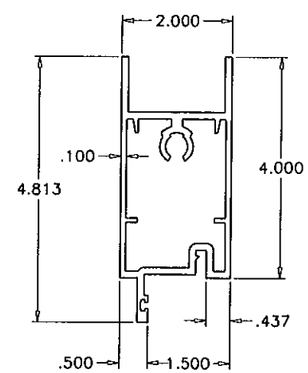

(6) TOP RAIL

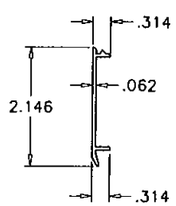

(5) JAMB COVER

(3) HANDICAP THRESHOLD

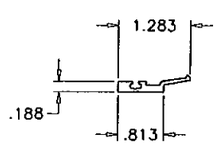

(11) GLAZING STOP

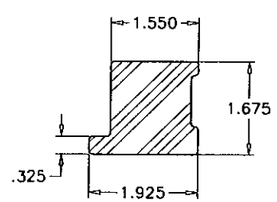

(12) ALUM REINFORCING

PRODUCT REVISED
as complying with the Florida
Building Code
Acceptance No 09-0212.02
Expiration Date 04/18/2012
By Ishaq I. Chanda
Miami Dade Product Control
Division

Engr: DR. HUMAYOUN FAROOQ
STRUCTURES
FLA. PE # 16557
C.A.N. 3538

MAR 18 2009

AL-FAROOQ CORPORATION
ENGINEERS & PRODUCT DEVELOPMENT
1235 S.W. 87 AVE
MIAMI, FLORIDA 33174
TEL. (305) 264-8100 FAX. (305) 262-6978

COMP-ANL\W08-94CDI

SERIES-HC5000 ALUM OUTSWING ENTRANCE DOOR (L.M.I.)

COMMERCIAL DOOR INTL. INC.
2412 SOUTH GELMAN PLACE
TAMPA, FL. 33619
TEL. (813) 247-7700 FAX. (813) 247-7771

revisions:

no	date	by	description
A	03.16.09		NO CHANGE THIS SHEET

date: 12-03-08
scale: 3/8" = 1"
dr. by: HAMID
chk. by:

drawing no.
W08-94

sheet 6 of 7

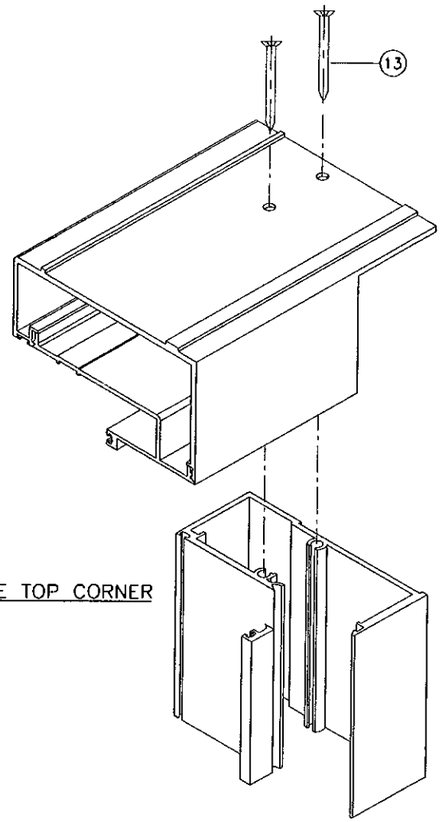

FRAME TOP CORNER

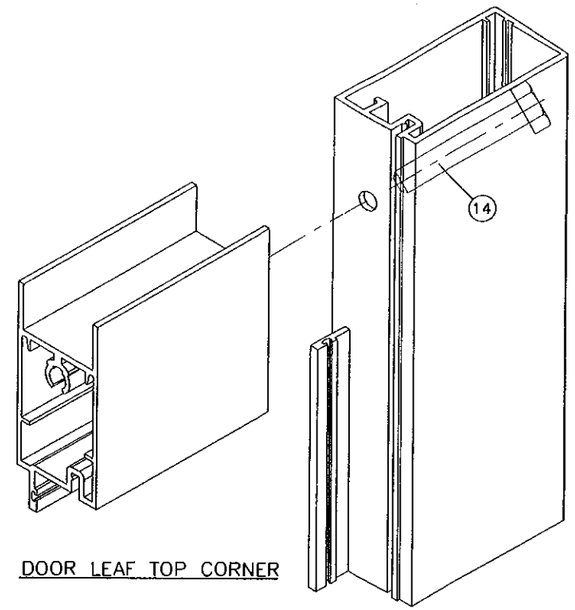

DOOR LEAF TOP CORNER

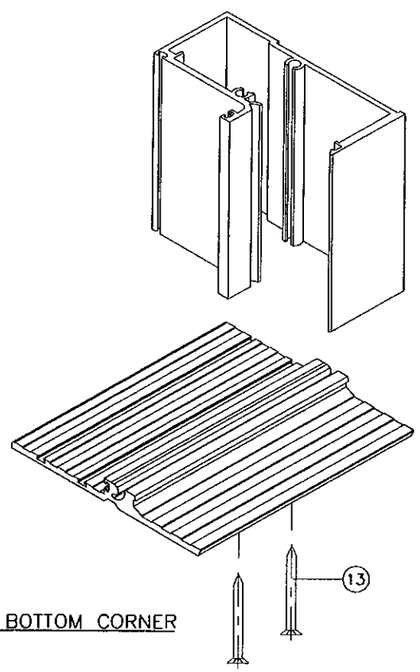

FRAME BOTTOM CORNER

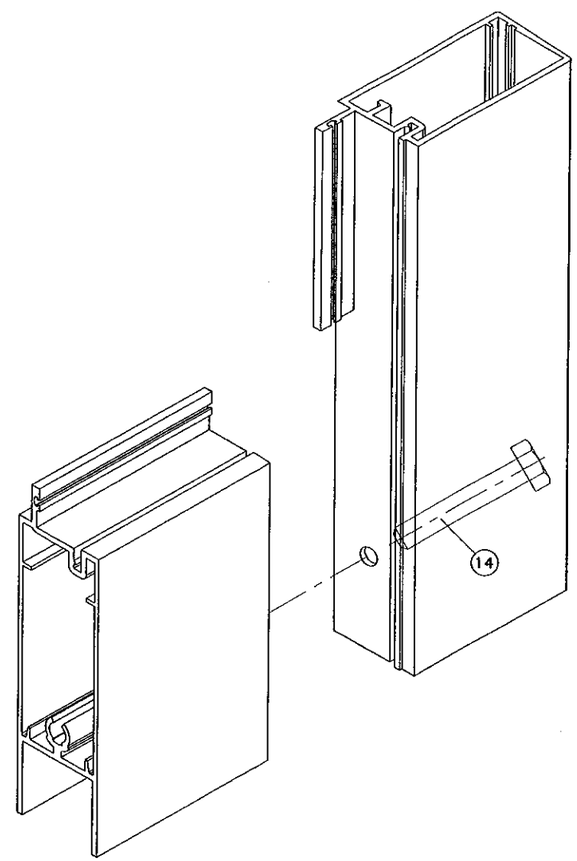

DOOR LEAF BOTTOM CORNER

PRODUCT REVISED
as complying with the Florida
Building Code
Acceptance No 09-0212.02
Expiration Date 04/18/2012
By Ishag I. Chandu
Miami Dade Product Control
Division

Engr: DR. HUMAYOUN FAROOQ
STRUCTURES
FLA. PE # 16557
C.A.N. 3538

MAR 18 2009

AL-FAROOQ CORPORATION
ENGINEERS & PRODUCT DEVELOPMENT
1235 S.W. 87 AVE
MIAMI, FLORIDA 33174
TEL. (305) 264-8100 FAX. (305) 262-6978

COMP-ANL\W08-94CDI

SERIES-HC5000 ALUM OUTSWING ENTRANCE DOOR (L.M.I.)

COMMERCIAL DOOR INTL. INC.
2412 SOUTH GELMAN PLACE
TAMPA, FL. 33619
TEL. (813) 247-7700 FAX. (813) 247-7771

revisions:

no	date	by	description
A	03.16.09		NO CHANGE THIS SHEET

date: 12-03-08
scale: 3/8" = 1"
dr. by: HAMID
chk. by:

drawing no.
W08-94

sheet 7 of 7