MIAMI-DADE COUNTY
BUILDING CODE COMPLIANCE OFFICE (BCCO)
PRODUCT CONTROL DIVISION

MIAMI-DADE COUNTY, FLORIDA
METRO-DADE FLAGLER BUILDING
140 WEST FLAGLER STREET, SUITE 1603
MIAMI, FLORIDA 33130-1563
(305) 375-2901 FAX (305) 372-6339
www.miamidade.gov/buildingcode

NOTICE OF ACCEPTANCE (NOA)

United States Aluminum Corporation
720 Cel-River Road
Rock Hill, SC 29730

SCOPE:

This NOA is being issued under the applicable rules and regulations governing the use of construction materials. The documentation submitted has been reviewed by Miami-Dade County Product Control Division and accepted by the Board of Rules and Appeals (BORA) to be used in Miami Dade County and other areas where allowed by the Authority Having Jurisdiction (AHJ).

This NOA shall not be valid after the expiration date stated below. The Miami-Dade County Product Control Division (In Miami Dade County) and/or the AHJ (in areas other than Miami Dade County) reserve the right to have this product or material tested for quality assurance purposes. If this product or material fails to perform in the accepted manner, the manufacturer will incur the expense of such testing and the AHJ may immediately revoke, modify, or suspend the use of such product or material within their jurisdiction. BORA reserves the right to revoke this acceptance, if it is determined by Miami-Dade County Product Control Division that this product or material fails to meet the requirements of the applicable building code. This product is approved as described herein, and has been designed to comply with the Florida Building Code, including the High Velocity Hurricane Zone.

DESCRIPTION: Series "IG-500 Storm Front" Outswing Aluminum Storefront Door – L.M.I.

APPROVAL DOCUMENT: Drawing No. **USA-2402**, titled "Series IG500 Storm Front Entrance System" Sheets 1 through 11 of 11, prepared by manufacturer, dated 06/26/02 with revision A2 dated 01/14/10, prepared by manufacturer, signed and sealed by Cynthia J. Ebert, P.E., bearing the Miami-Dade County Product Control Revision stamp with the Notice of Acceptance number and expiration date by the Miami-Dade County Product Control Division.

MISSILE IMPACT RATING: Large and Small Missile Impact Resistant

LABELING: Each unit shall bear a permanent label with the manufacturer's name or logo, city, state and following statement: "Miami-Dade County Product Control Approved", unless otherwise noted herein.

RENEWAL of this NOA shall be considered after a renewal application has been filed and there has been no change in the applicable building code negatively affecting the performance of this product.

TERMINATION of this NOA will occur after the expiration date or if there has been a revision or change in the materials, use, and/or manufacture of the product or process. Misuse of this NOA as an endorsement of any product, for sales, advertising or any other purposes shall automatically terminate this NOA. Failure to comply with any section of this NOA shall be cause for termination and removal of NOA.

ADVERTISEMENT: The NOA number preceded by the words Miami-Dade County, Florida, and followed by the expiration date may be displayed in advertising literature. If any portion of the NOA is displayed, then it shall be done in its entirety.

INSPECTION: A copy of this entire NOA shall be provided to the user by the manufacturer or its distributors and shall be available for inspection at the job site at the request of the Building Official.

This NOA **revises and renews NOA # 02-1011.03** and consists of this page 1 and evidence page E-1, as well as approval document mentioned above.

The submitted documentation was reviewed by **Manuel Perez, P.E.**

MIAMI-DADE COUNTY APPROVED

United States Aluminum Corporation

NOTICE OF ACCEPTANCE: EVIDENCE SUBMITTED

A. DRAWINGS

1. Manufacturer's die drawings and sections.
2. Drawing No. **USA-2402**, titled "Series IG500 Storm Front Entrance System" Sheets 1 through 11 of 11, dated 06/26/02 with revision A2 dated 01/14/10, prepared by manufacturer, signed and sealed by Cynthia J. Ebert, P.E.

B. TESTS

1. Test reports on: 1) Air Infiltration Test, per TAS 202-94
   2) Uniform Static Air Pressure Test, Loading per TAS 202-94
   3) Water Resistance Test, per TAS 202-94
   4) Large Missile Impact Test, TAS PA 201-94
   2) Cyclic Loading Test, per FBC TAS 203-94

   along with installation diagram of aluminum storefront system marked-up by Architectural Testing, Inc., Test Reports No. **ATI-03-31371.01,** dated 09-12/02, signed and sealed by Steven M. Urich, P.E.
   (Submitted under previous NOA#02-1011.03)

C. CALCULATIONS

1. Anchor verification calculations and structural analysis, complying with FBC-2007, prepared by Larson Engineering, Inc., dated 11/03/09, signed and sealed by Cynthia J. Ebert, P.E.
   Complies with ASTM E1300-98/02

D. QUALITY ASSURANCE

1. Miami Dade Building Code Compliance Office (BCCO).

E. MATERIAL CERTIFICATIONS

1. Notice of Acceptance No. **07-1116.11** issued to Saf–Glas, LLC for their "**SAF–GLAS Polycarbonate Laminate**", dated 12/27/07, expiring on 12/16/12.

F. STATEMENTS

1. Statement letter of conformance, dated November 2, 2009, signed and sealed by Cynthia J. Ebert, P.E.

G. OTHERS

1. Notice of Acceptance No. **02-1011.03**, issued to United States Aluminum Corporation. for their Series IG 500 Outswing Aluminum Storefront Door System, approved on 03/13/03 and expiring on 03/13/08.

Manuel Perez, P.E.
Product Control Examiner
NOA No. 09-0212.11
Expiration Date: March 17, 2015
Approval Date: March 17, 2010

SYM	REVISION	DATE	BY
A1	REVISED NOTES PER BCCO AND REVISED ANCHOR NOTES PER LARSON CALCS	11.25.09	DCW
A2	REVISED NOTES PER BCCO	01.14.10	DCW

TEST REQUIREMENTS

ALLOWABLE AIR INFILTRATION:

(ASTM E283-91)
1.20 CFM/ft ² @ 6.24 psf
(DOORS-Dade County)
1.0 CFM/ft ² @ 1.57 psf
(DOORS-Outside Dade County)

ALLOWABLE WATER INFILTRATION:

(ASTM E331-93) STATIC PRESSURE
NO UNCONTROLLED WATER @ 10 psf

STRUCTURAL PERFORMANCE:

(ASTM E330-96)
DESIGN = +/- 65 psf
ALLOWABLE DEFLECTION = L/180

FORCED ENTRY:

IMPACT TEST:

(FBC PA-201-94)
LARGE MISSILE
SMALL MISSILE
(not required if pass large missile test)

CYCLICAL LOADING TEST:

(FBC PA-203-94)
4,500 CYCLES (+)
4,500 CYCLES (-)

TEST UNIT SPECIFICATIONS

	OPTION #1	OPTION #2	OPTION #3
GLASS	1/4 HS .070 POLYCARBONATE 1/4 HS	N/A	N/A
LOCK	ADAMS RITE MS1850 HKBLT MS1880 FLSHBLT	JACKSON 2086 PANIC	JACKSON 1285 PANIC
HINGE	USAC DH009 (HAGAR 4x4 1/2) 1 1/2 PAIR	HAGAR 4x4 1/2 SS BUTT HINGES 1191 32DSS 1 1/2 PAIR	N/A
PUSH/PULL	USAC STANDARD ASTRAL	ROCKWOOD BF15747	N/A
SURFACE CLOSER	DORMA 650	DORMA 650 PAFHO	LCN 4040
STRUCTURAL SILICONE	DOW 995	N/A	N/A
PERIMETER SILICONE	DOW 795	N/A	N/A
SUBSTRATE MATERIAL	STEEL	CONCRETE	WOOD

BILL OF MATERIALS

CB801	CORNER BLOCK
CB802	SHEAR CHANNEL, DOOR
IE050	GLASS STOP, DOOR
IE402	TOP RAIL
IG567	TRANSOM BAR
IG504	VERTICAL FILLER
IG515	VERTICAL
IG505	JAMB
IG570	SUBSILL
IG572	SILL
IG563	GLASS STOP
IG562	HORIZONTAL
IG552	HEAD
TH804	THRESHOLD INSERT, WATER
TH800	THRESHOLD, WATER
IE401	BOTTOM RAIL
TH811	THRESHOLD, AIR
IG047	DOOR STOP BASE
IG046	DOOR STOP
IE420	HINGE/LOCK STILE
DH350	ASTRAGAL
IE460	MEETING STILE
IE450	MEETING STILE
EC801	SUBSILL END DAM
SS802	STEEL REINFORCING
---	1/2" ø GR 5 POWER-BOLT (HEAD @ CONC)
---	3/8" ø GR 5 POWER-BOLT (SILL/JAMB @ CONC)
---	3/8" DIA. X 4" GR 5 LAG AT JAMB
---	#12-24 X 1/4" FH MS (THRESHOLD CLIP)
---	#14 X 2" GRADE 5 FH TAPCON
---	1/2" ø GRADE 5 HH (HEAD @ STEEL)
---	1/2" X 6" GRADE 5 HH LAG (HEAD/JAMB @ WOOD)
---	3/8-16 ø GRADE 5 HH (SILL/JAMB @ STEEL)
---	3/8" X 4" GRADE 5 HH LAG (SILL @ WOOD)
---	3/8-16 X 3" GRADE 5 HH BOLT (DOOR)
ST035	#10 X 5/8" FH SMS (DOORS)
ST190	#8 X 3/4" PH OH TEK
ST197	#8 X 3/8" PH SMS (DOOR STOP)
ST266	#12x1" HWH DRILL FLEX
ST268	#12 X 3/4" HWH SMS
NP803	DOOR HEADER PVC FLAP
CP801	VERTICAL CLOSURE PLATES
WD801	SHALLOW WATER DEFLECTOR
WD802	DEEP WATER DEFLECTOR
WD803	JAMB WATER DEFLECTOR
NP802	MTG STILE GASKET
NP801	DOOR SEAL GASKET
NP225	EXTERIOR GASKET
SP250	INTERIOR SPACER GASKET
SB916	SETTING BLOCK
D-916	SETTING BLOCK

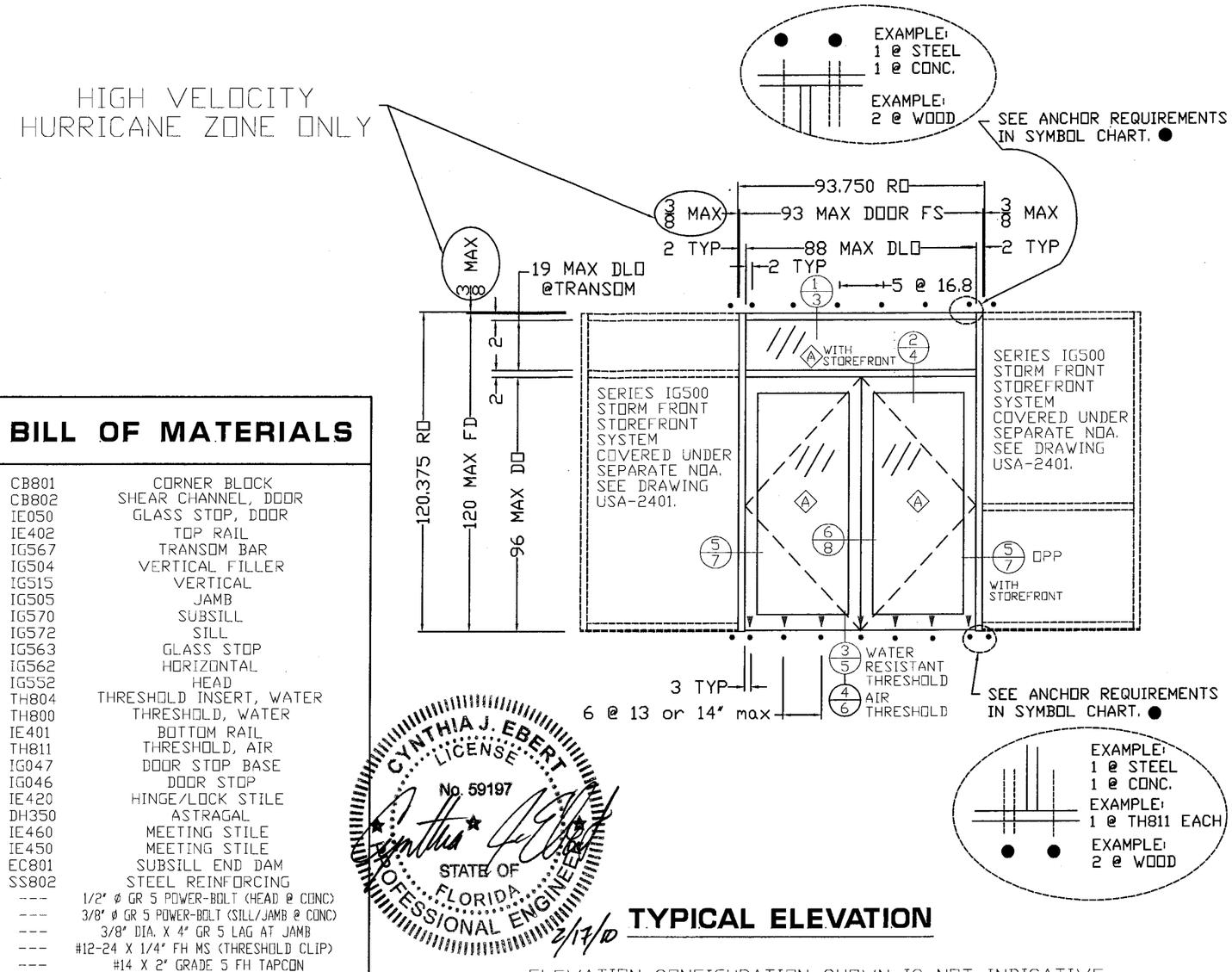

CYNTHIA J. EBERT LICENSE No. 59197 STATE OF FLORIDA PROFESSIONAL ENGINEER
2/17/10

TYPICAL ELEVATION

ELEVATION CONFIGURATION SHOWN IS NOT INDICATIVE OF ALL FIELD APPLICATIONS.
THIS ELEVATION REPRESENTS THE MAXIMUM DOOR SIZE AND FRAME HEIGHT FOR NOA THAT IS BEING REQUESTED.
ALL DIMENSIONS IN INCHES".

	DESIGN PRESSURE RATING				IMPACT RATING
	WHERE WATER INFILTRATION IS REQUIRED		WHERE WATER INFILTRATION IS NOT REQUIRED		SMALL MISSILE OR LARGE MISSILE IMPACT
	TH800 THRESHOLD	TH811 THRESHOLD	TH800 THRESHOLD	TH811 THRESHOLD	
POSITIVE	+65 PSF	NOT APPROVED	+65 PSF	+65 PSF	
NEGATIVE	-65 PSF	NOT APPROVED	-65 PSF	-65 PSF	

SUBSIDIARY OF INTERNATIONAL ALUMINUM CORPORATION

SYMBOL KEY	
SYMBOL	DESCRIPTION
◇A	1/4 HS + .070 SAF GLAS + 1/4 HS SEE "Saf-Glas LLC" NOA #07-1116.11 (12.27.07 Expires 12.16.12)
▼	ST268 B #12 X 3/4" @ 2" EA END & 16" MAX OC
●	PERIMETER ANCHORS INTO SUBSTRATE ANCHOR NOTES: EACH ● EQUALS = 1. @ .25" STEEL: (1) 3/8"DIA. GRADE 5 BOLT 5/16" EDGE DISTANCE. 2. @ 3000 PSI CONCRETE: (1) 3/8" DIA RAWL POWER BOLTS W/2½" EMBED X 4½" EDGE DISTANCE. 3. WOOD: (2) 3/8" DIA GRADE 5 LAG BOLTS W/4" EMBED, 2" APART. 1¾" EDGE DISTANCE. 4. TH811 THRESHOLD ¼" TAPCONS @ 14" MAX O.C. W/ 1¾" EMBEDMENT 3" EDGE DISTANCE.

THIS SPACE RESERVED FOR STRUCTURAL ENGINEER

A1

Larson Engineering, Inc.
5757 Phantom Drive, Suite 200
St. Louis, MO 63042-2429
314.731.4710 Fax: 314.731.4712
www.larsonengr.com

© 2009 LEI

Project Number: 53090332.000
Florida COA #: 00009803
Cynthia J. Ebert
Registration #: 59197

THIS SPACE RESERVED FOR METRO-DADE USE ONLY

PRODUCT REVISED
as complying with the Florida Building Code
Acceptance No. 09-0212.11
Expiration Date MARCH 17, 2015
By Manuel Perez
Miami-Dade Product Control Division

United States Aluminum
720 Cel-River Road
Rock Hill, SC 29730
200 Singleton Drive
Waxahachie, TX 75165
Phone 1.800.627.6440
Fax 1.800.841.8722
Website www.usalum.com

DRAWN BY: G.HALL	SYSTEM: SERIES IG500 STORM FRONT ENTRANCE SYSTEM	
DATE: 06/26/02		
APPVD BY:	DESCRIPTION: SUBMITTAL DRAWINGS	
SCALE: NTS	DRAWING NO.: USA-2402	SHEET: 1 OF 11

HIGH VELOCITY
HURRICANE ZONE ONLY

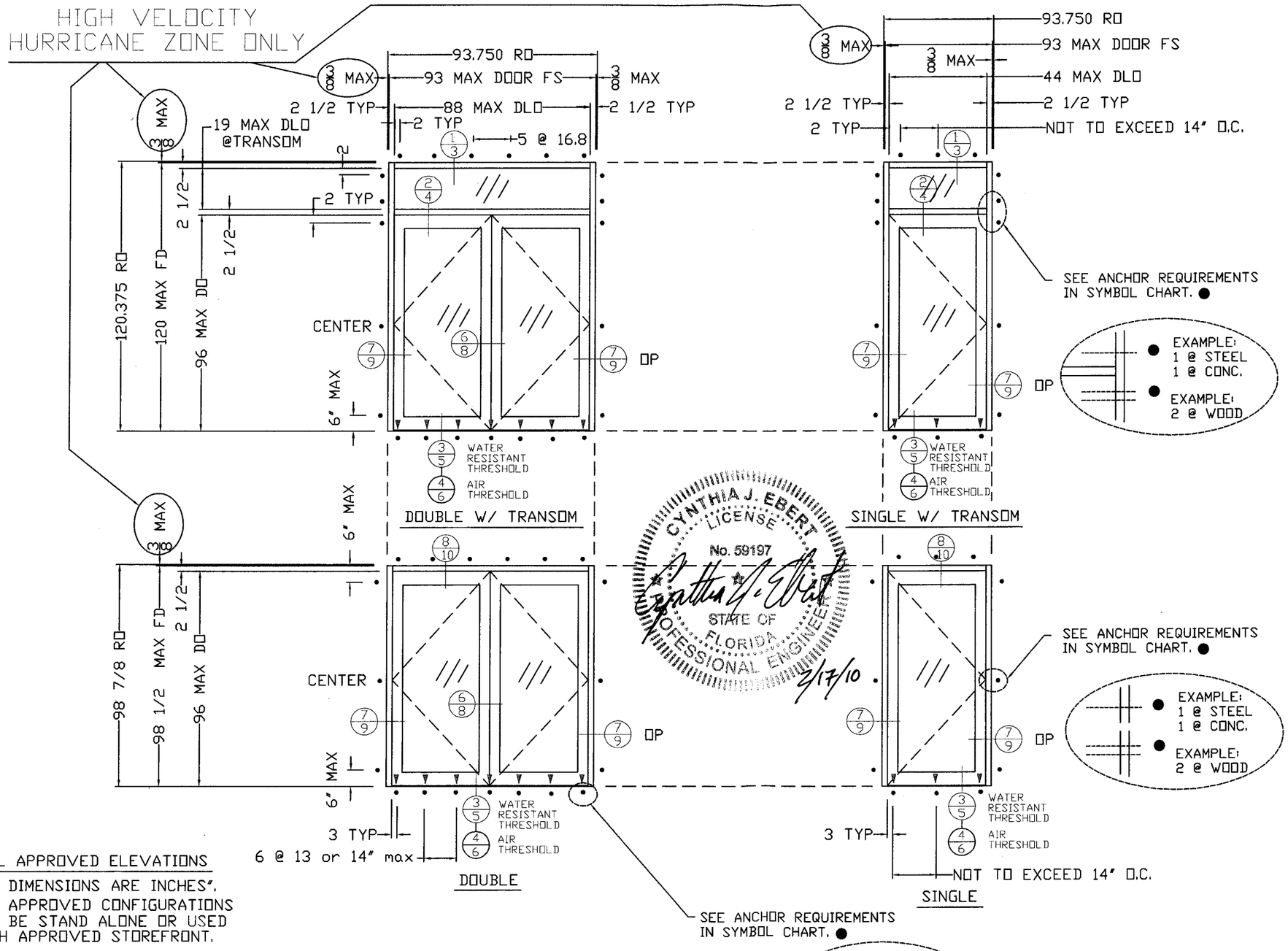

ADDITIONAL APPROVED ELEVATIONS

NOTE: ALL DIMENSIONS ARE INCHES".
ALL APPROVED CONFIGURATIONS CAN BE STAND ALONE OR USED WITH APPROVED STOREFRONT.

DESIGN PRESSURE RATING				IMPACT RATING
	WHERE WATER INFILTRATION IS REQUIRED		WHERE WATER INFILTRATION IS NOT REQUIRED	SMALL MISSILE IMPACT
	TH800 THRESHOLD	TH811 THRESHOLD	TH800 THRESHOLD / ~~TH811 THRESHOLD~~	LARGE MISSILE IMPACT
POSITIVE	+65 PSF	NOT APPROVED	+65 PSF	
NEGATIVE	-65 PSF	NOT APPROVED	-65 PSF	

SYM	REVISION	DATE	BY
A1	REVISED NOTES PER BCCO AND REVISED ANCHOR NOTES PER LARSON CALCS	11.25.09	DCW
A1	REVISED NOTES PER BCCO	01.14.10	DCW

SYMBOL KEY

SYMBOL	DESCRIPTION
A	1/4 HS + .070 SAF GLAS + 1/4 HS SEE "Saf-Glas LLC" NOA #07-1116.11 (12.27.07 Expires 12.16.12)
▼	ST268 B #12 X ¾" @ 2" EA END & 16" MAX OC
●	PERIMETER ANCHORS INTO SUBSTRATE ANCHOR NOTES: EACH ● EQUALS = 1. @ .25" STEEL: (1) ⅜"DIA. GRADE 5 BOLT 9/16" EDGE DISTANCE. 2. @ 3000 PSI CONCRETE: (1) ⅜" DIA RAWL POWER BOLTS W/2½" EMBED X 4½" EDGE DISTANCE. 3. WOOD: (2) ⅜" DIA GRADE 5 LAG BOLTS W/4" EMBED, 2" APART. 1¾" EDGE DISTANCE. 4. TH811 THRESHOLD ¼" TAPCONS @ 14" MAX O.C. W/ 1¾" EMBEDMENT 3" EDGE DISTANCE.

THIS SPACE RESERVED FOR STRUCTURAL ENGINEER

A1

Larson Engineering, Inc.
5757 Phantom Drive, Suite 200
St. Louis, MO 63042-2429
314.731.4710 Fax: 314.731.4712
www.larsonengr.com

© 2009 LEI
Project Number: 53090332.000
Florida COA #: 00009803
Cynthia J. Ebert
Registration #: 59197

CYNTHIA J. EBERT LICENSE No. 59197 STATE OF FLORIDA PROFESSIONAL ENGINEER
2/17/10

THIS SPACE RESERVED FOR METRO-DADE USE ONLY

PRODUCT REVIEWED
as complying with the Florida Building Code
Acceptance No. 09-0212.11
Expiration Date MARCH 17, 2010
By Manuel Perez
Miami-Dade Product Control Division

United States Aluminum
720 Cel-River Road
Rock Hill, SC 29730
200 Singleton Drive
Waxahachie, TX 75165
Phone 1.800.627.6440
Fax 1.800.841.8722
Website www.usalum.com

DRAWN BY	SYSTEM	
G.HALL	SERIES IG500 STORM FRONT ENTRANCE SYSTEM	
DATE 06/26/02		
APPVD BY	DESCRIPTION SUBMITTAL DRAWINGS	
SCALE NTS	DRAWING NO. USA-2402	SHEET 2 OF 11

SUBSIDIARY OF INTERNATIONAL ALUMINUM CORPORATION

SYM	REVISION	DATE	BY
A1	REVISED NOTES PER BCCO AND REVISED ANCHOR NOTES PER LARSON CALCS	11. 25. 09	DCW
A2	REVISED NOTES PER BCCO	01. 14. 10	DCW

A2 ANCHOR NOTES: EACH ● EQUALS =

1. @ .25" STEEL: (1) 3/8" DIA. GRADE 5 BOLT 9/16" EDGE DISANCE.
2. @ 3000 PSI CONCRETE: (1) 3/8" DIA RAWL POWER BOLTS W/2½" EMBED X 4½" DIA EDGE DISTANCE.
3. WOOD: (2) 3/8" DIA GRADE 5 LAG BOLTS W/4" EMBED, 2" APART 1¾" EDGE DISTANCE.

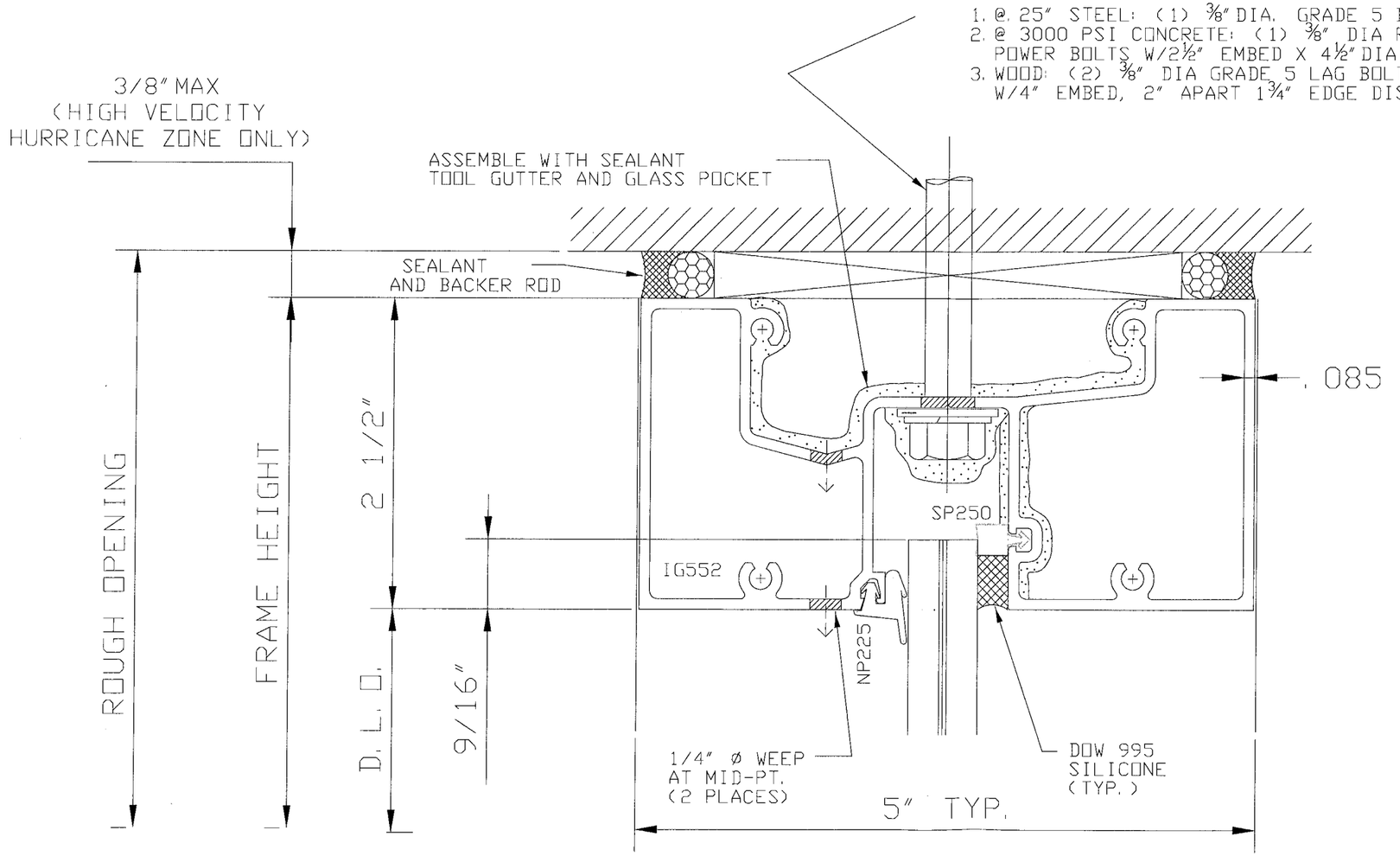

1 HEAD DETAIL

6063 T5

CYNTHIA J. EBERT LICENSE No. 59197 STATE OF FLORIDA PROFESSIONAL ENGINEER

Cynthia J. Ebert 5/17/10

THIS SPACE RESERVED FOR STRUCTURAL ENGINEER

A1

Larson Engineering, Inc.
5757 Phantom Drive, Suite 200
St. Louis, MO 63042-2429
314.731.4710 Fax: 314.731.4712
www.larsonengr.com

© 2009 LEI

Project Number: 53090332.000
Florida COA #: 00009803
Cynthia J. Ebert
Registration #: 59197

THIS SPACE RESERVED FOR METRO-DADE USE ONLY

PRODUCT REVIEWED
as complying with the Florida
Building Code
Acceptance No. 09-0212.11
Expiration Date MARCH 17, 2015
By Manuel Perez
Miami-Dade Product Control
Division

United States Aluminum
720 Cel-River Road
Rock Hill, SC 29730
200 Singleton Drive
Waxahachie, TX 75165

DRAWN BY	SYSTEM	
G. HALL	SERIES IG500 STORM FRONT ENTRANCE SYSTEM	
DATE 06/26/02		
APPVD BY	DESCRIPTION SUBMITTAL DRAWINGS	
SCALE AS SHOWN	DRAWING NO. USA-2402	SHEET 3 OF 11

SYM	REVISION	DATE	BY
A1	REVISED NOTES PER BCCD AND REVISED ANCHOR NOTES PER LARSON CALCS	11.25.09	DCW
A2	REVISED NOTES PER BCCD	01.14.10	DCW

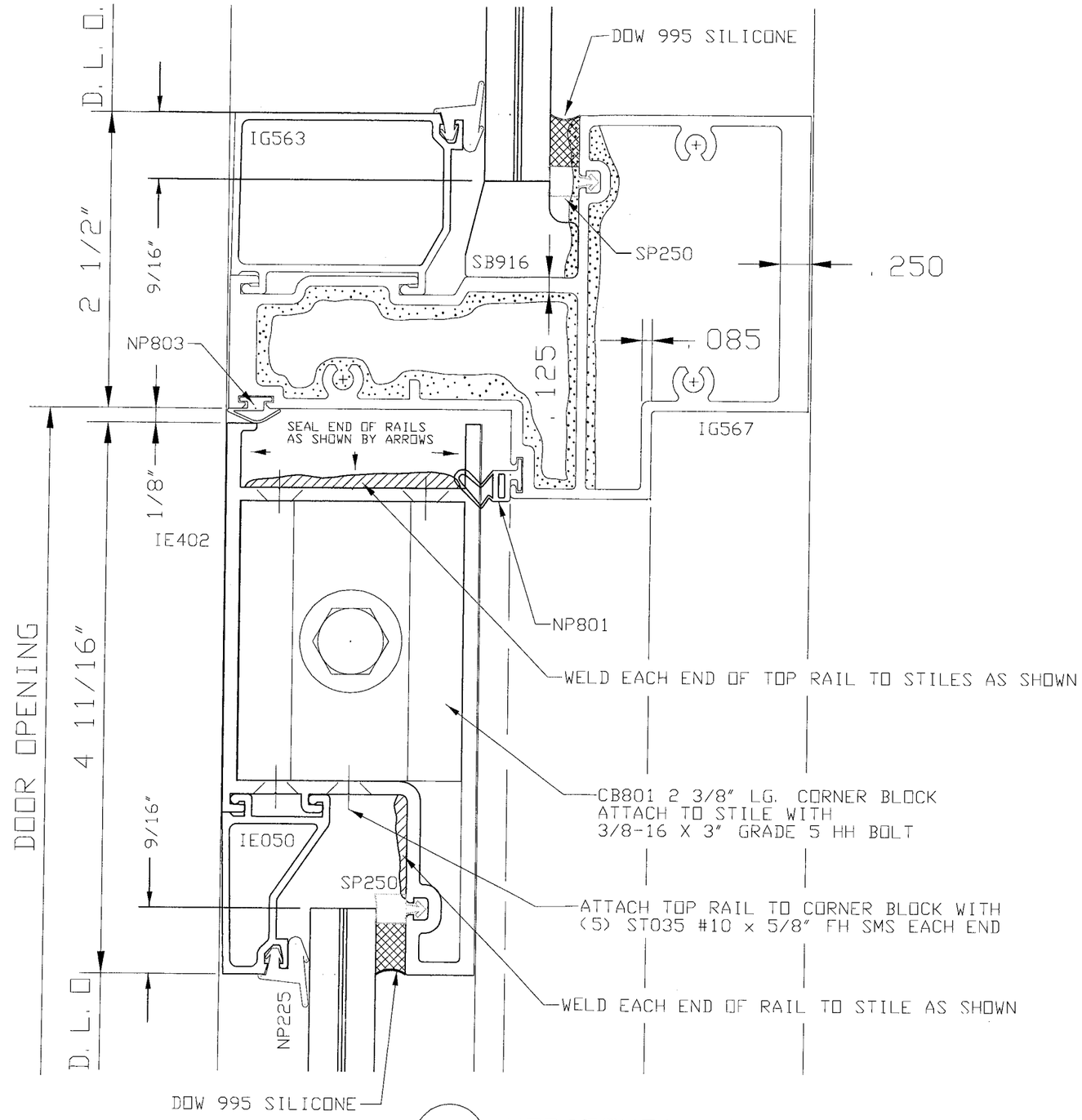

2 HORIZONTAL MULLION @ TRANSOM

6063 T5

CYNTHIA J. EBERT
LICENSE
No. 59197
STATE OF FLORIDA
PROFESSIONAL ENGINEER
2/17/10

THIS SPACE RESERVED FOR STRUCTURAL ENGINEER

A1

Larson Engineering, Inc.
5757 Phantom Drive, Suite 200
St. Louis, MO 63042-2429
314.731.4710 Fax: 314.731.4712
www.larsonengr.com

© 2009 LEI
Project Number: 53090332.000
Florida COA #: 00009803
Cynthia J. Ebert
Registration #: 59197

THIS SPACE RESERVED FOR METRO-DADE USE ONLY

PRODUCT REVISED
as complying with the Florida
Building Code
Acceptance No. 09-0212.11
Expiration Date MARCH 17, 2015
By Manuel Perez
Miami-Dade Product Control
Division

United States Aluminum
720 Cel-River Road
Rock Hill, SC 29730
200 Singleton Drive
Waxahachie, TX 75165

DRAWN BY	SYSTEM	
G. HALL	SERIES IG500 STORM FRONT ENTRANCE SYSTEM	
DATE 06/26/02		
APPVD BY	DESCRIPTION SUBMITTAL DRAWINGS	
SCALE AS SHOWN	DRAWING NO. USA-2402	SHEET 4 OF 11

SYM	REVISION	DATE	BY
A1	REVISED NOTES PER BCCO AND REVISED ANCHOR NOTES PER LARSON CALCS	11.25.09	DCW
A2	REVISED NOTES PER BCCO	01.14.10	DCW

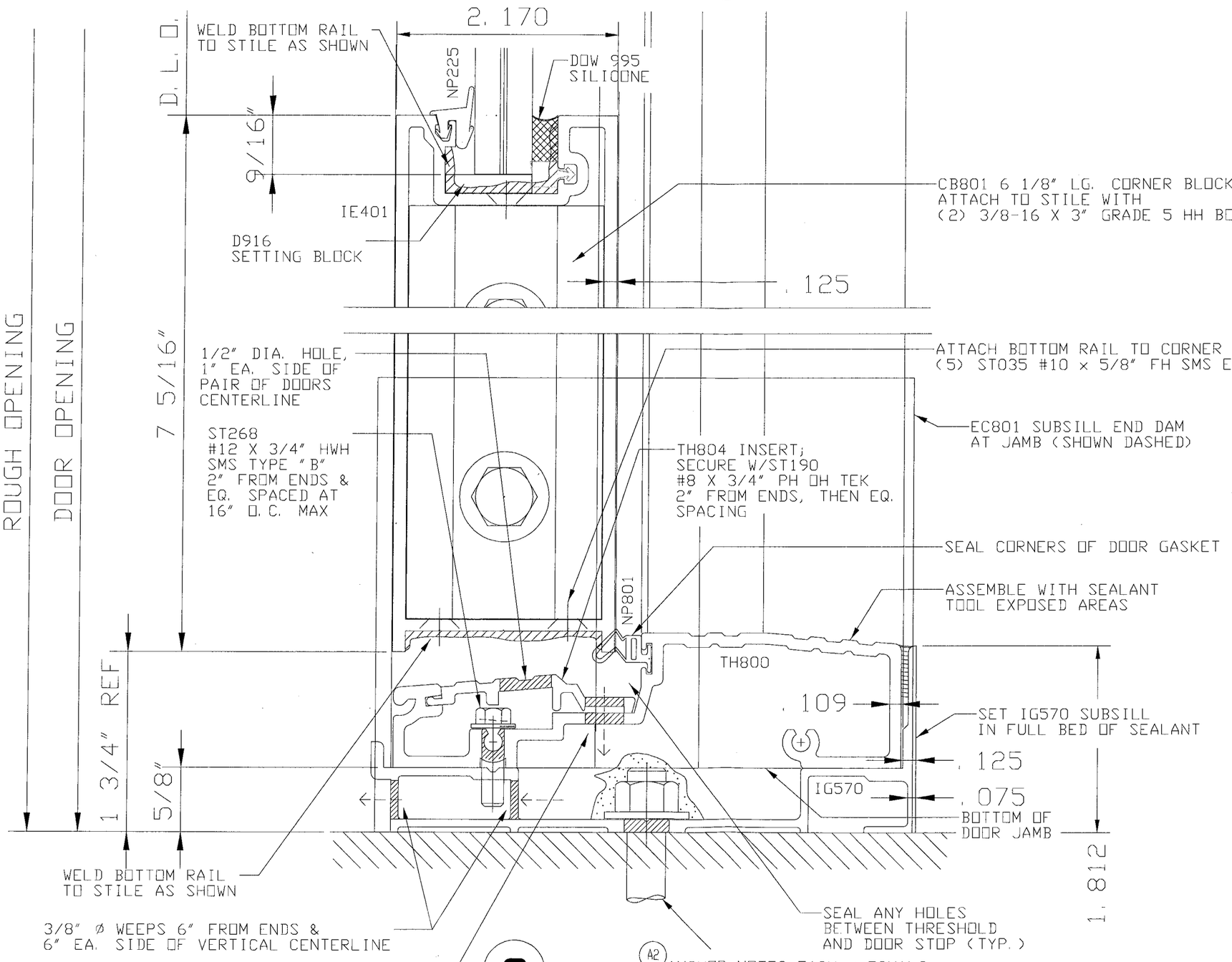

A2 ANCHOR NOTES: EACH ● EQUALS =

1. @ .25" STEEL: (1) 3/8" DIA. GRADE 5 BOLT 9/16" EDGE DISANCE.
2. @ 3000 PSI CONCRETE: (1) 3/8" DIA RAWL POWER BOLTS W/2½" EMBED X 4½" DIA EDGE DISTANCE.
3. WOOD: (2) 3/8" DIA GRADE 5 LAG BOLTS W/4" EMBED, 2" APART 1¾" EDGE DISTANCE.

WATER THRESHOLD DETAIL

6063 T5

CYNTHIA J. EBERT LICENSE No. 59197 STATE OF FLORIDA PROFESSIONAL ENGINEER
9/17/10

THIS SPACE RESERVED FOR STRUCTURAL ENGINEER

A1

Larson Engineering, Inc.
5757 Phantom Drive, Suite 200
St. Louis, MO 63042-2429
314.731.4710 Fax: 314.731.4712
www.larsonengr.com

© 2009 LEI

Project Number: 53090332.000
Florida COA #: 00009803
Cynthia J. Ebert
Registration #: 59197

THIS SPACE RESERVED FOR METRO-DADE USE ONLY

PRODUCT REVISED
as complying with the Florida Building Code
Acceptance No. 09-0212.11
Expiration Date MARCH 17, 2015
By Manuel Perez
Miami-Dade Product Control Division

United States Aluminum
720 Cel-River Road
Rock Hill, SC 29730
200 Singleton Drive
Waxahachie, TX 75165

DRAWN BY	SYSTEM	
G. HALL	SERIES IG500 STORM FRONT ENTRANCE SYSTEM	
DATE 06/26/02		
APPVD BY	DESCRIPTION SUBMITTAL DRAWINGS	
SCALE AS SHOWN	DRAWING NO. USA-2402	SHEET 5 OF 11

SYM	REVISION	DATE	BY
A1	REVISED NOTES PER BCCO AND REVISED ANCHOR NOTES PER LARSON CALCS	11. 25. 09	DCW
A2	REVISED NOTES PER BCCO	01. 14. 10	DCW

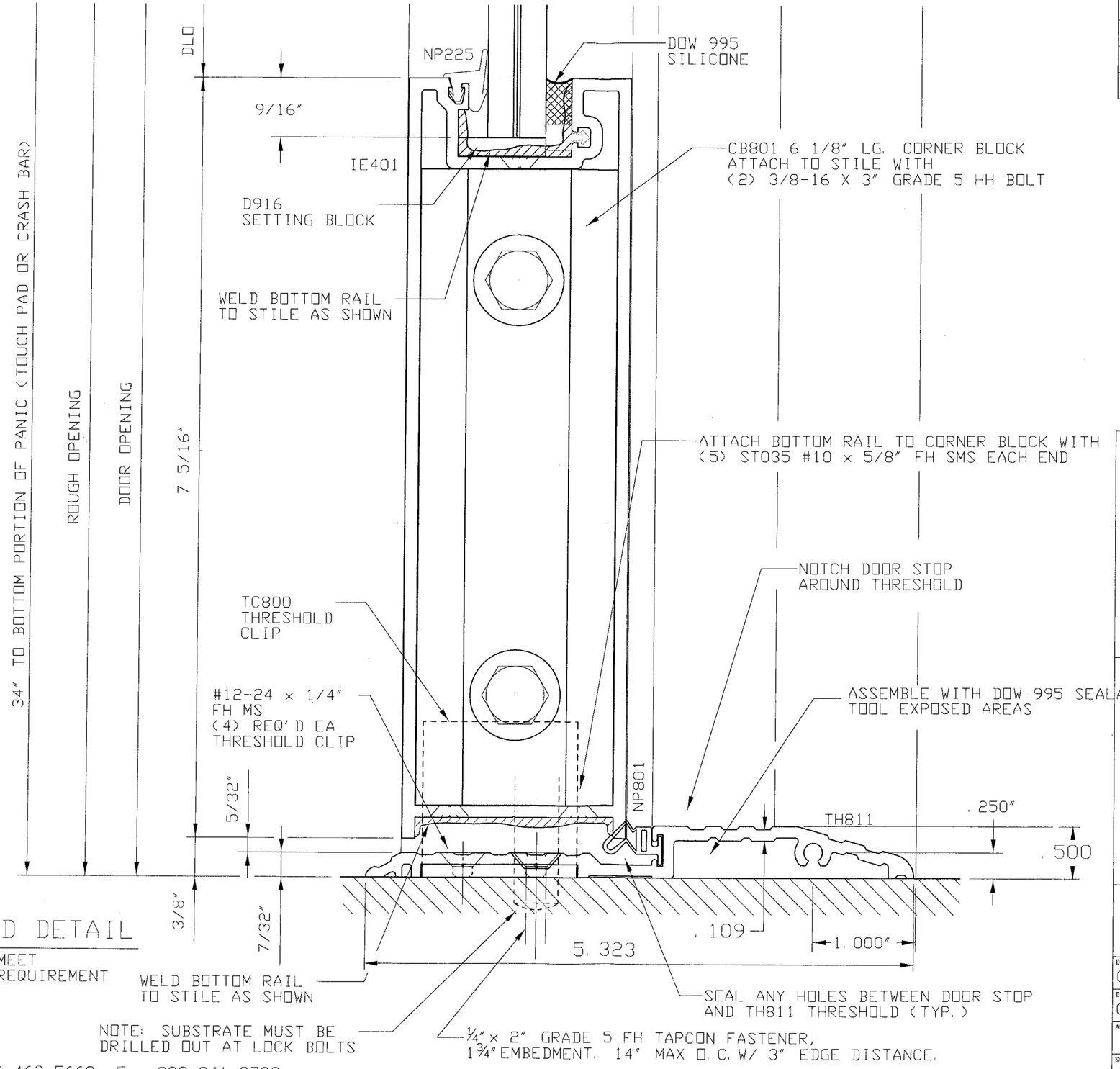

4

AIR THRESHOLD DETAIL

THRESHOLD DOES NOT MEET
WATER INFILTRATION REQUIREMENT
6063 T5

CYNTHIA J. EBERT
LICENSE
No. 59197
STATE OF FLORIDA
PROFESSIONAL ENGINEER
2/17/10

THIS SPACE RESERVED FOR STRUCTURAL ENGINEER

A1

Larson Engineering, Inc.
5757 Phantom Drive, Suite 200
St. Louis, MO 63042-2429
314.731.4710 Fax: 314.731.4712
www.larsonengr.com

© 2009 LEI
Project Number: 53090332.000
Florida COA #: 00009803
Cynthia J. Ebert
Registration #: 59197

THIS SPACE RESERVED FOR METRO-DADE USE ONLY

PRODUCT REVISED
as complying with the Florida
Building Code
Acceptance No. 09-0212.11
Expiration Date MARCH 17, 2015
By Manuel Perez
Miami-Dade Product Control
Division

United States Aluminum
720 Cel-River Road
Rock Hill, SC 29730
200 Singleton Drive
Waxahachie, TX 75165

DRAWN BY	SYSTEM	
G. HALL	SERIES IG500 STORM FRONT ENTRANCE SYSTEM	
DATE 06/26/02		
APPVD BY	DESCRIPTION SUBMITTAL DRAWINGS	
SCALE AS SHOWN	DRAWING NO. USA-2402	SHEET 6 OF 11

SYM	REVISION	DATE	BY
A1	REVISED NOTES PER BCCO AND REVISED ANCHOR NOTES PER LARSON CALCS	11. 25. 09	DCW
A2	REVISED NOTES PER BCCO	01. 14. 10	DCW

CYNTHIA J. EBERT
LICENSE
No. 59197
STATE OF FLORIDA
PROFESSIONAL ENGINEER
2/17/10

A2

MULL ASSEMBLY PROPERTIES:

TOTAL IN TERMS OF ALUMINUM: I_x alum = 14. 758 IN^4

S_x alum = 3. 139 IN^3

S_x steel = 1. 050 IN^3

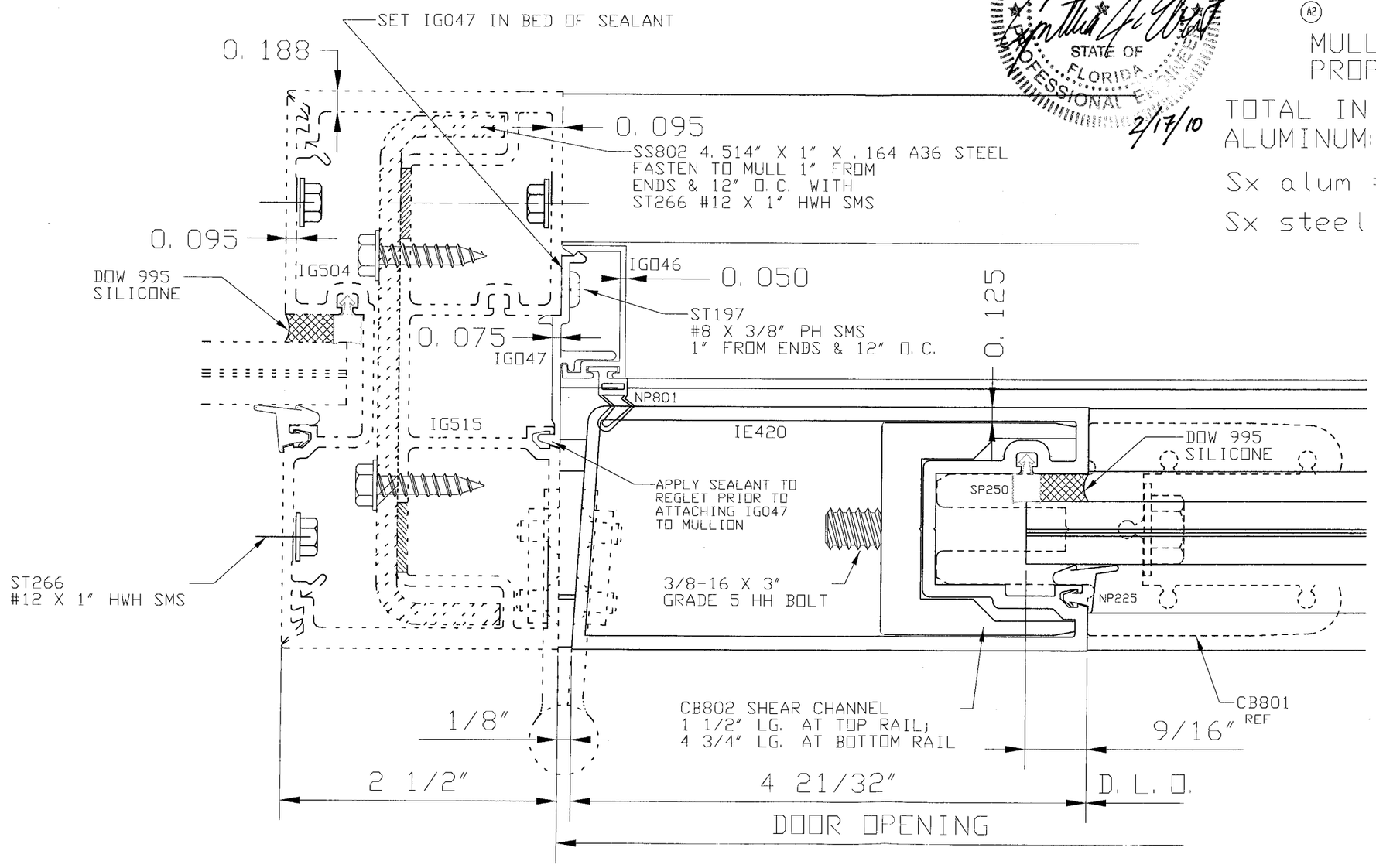

5 VERTICAL MULLION

6063 T5

A1

THIS SPACE RESERVED FOR STRUCTURAL ENGINEER

Larson Engineering, Inc.
5757 Phantom Drive, Suite 200
St. Louis, MO 63042-2429
314.731.4710 Fax: 314.731.4712
www.larsonengr.com

© 2009 LEI
Project Number: 53090332.000
Florida COA #: 00009803
Cynthia J. Ebert
Registration #: 59197

THIS SPACE RESERVED FOR METRO-DADE USE ONLY

PRODUCT REVISED
as complying with the Florida
Building Code
Acceptance No. 09-0212.11
Expiration Date MARCH 17, 2015
By Manuel Perez
Miami Dade Product Control
Division

United States Aluminum
720 Cel-River Road
Rock Hill, SC 29730
200 Singleton Drive
Waxahachie, TX 75165

DRAWN BY	SYSTEM	
G. HALL	SERIES IG500 STORM FRONT ENTRANCE SYSTEM	
DATE 06/26/02		
APPVD BY	DESCRIPTION SUBMITTAL DRAWINGS	
SCALE AS SHOWN	DRAWING NO. USA-2402	SHEET 7 OF 11

SYM	REVISION	DATE	BY
A1	REVISED NOTES PER BCCO AND REVISED ANCHOR NOTES PER LARSON CALCS	11. 25. 09	DCW
A2	REVISED NOTES PER BCCO	01. 14. 10	DCW

CYNTHIA J. EBERT
LICENSE
No. 59197
STATE OF FLORIDA
PROFESSIONAL ENGINEER
2/17/10

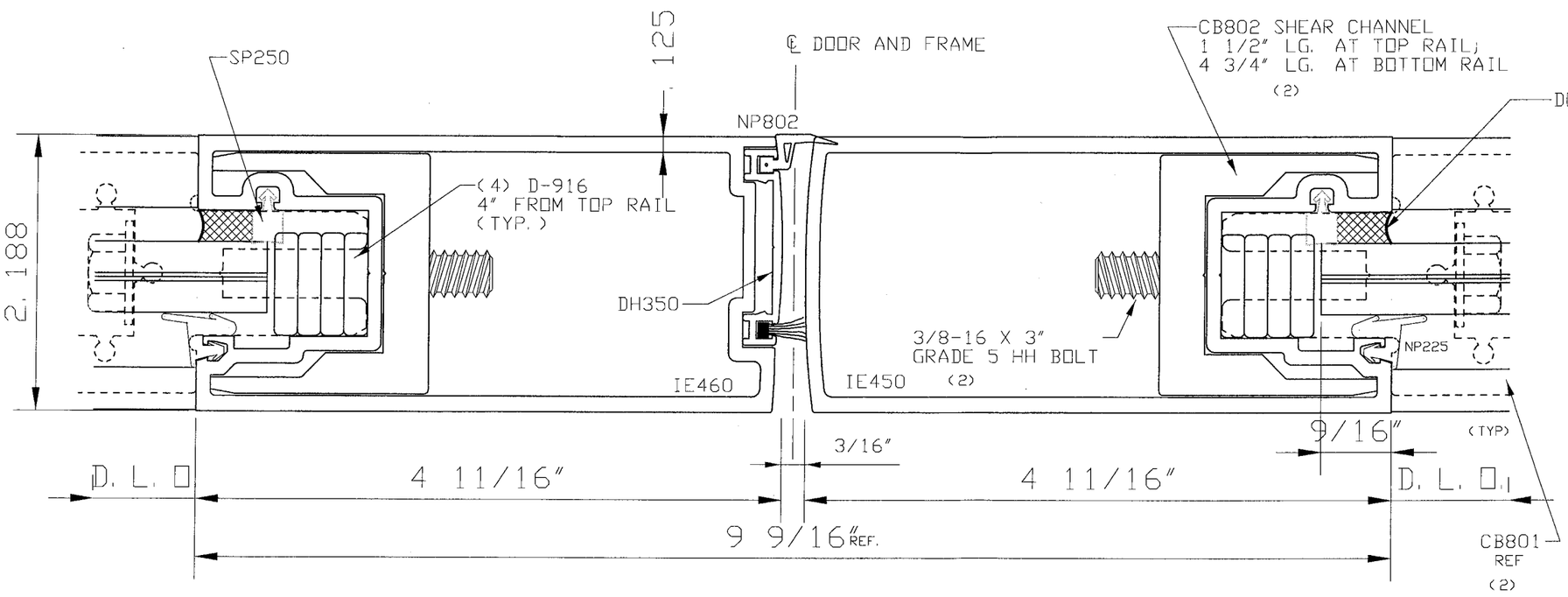

6 VERTICAL ASTREGAL MEETING STILES

6063 T5

THIS SPACE RESERVED FOR STRUCTURAL ENGINEER

A1

Larson Engineering, Inc.
5757 Phantom Drive, Suite 200
St. Louis, MO 63042-2429
314.731.4710 Fax: 314.731.4712
www.larsonengr.com

© 2009 LEI

Project Number: 53090332.000
Florida COA #: 00009803
Cynthia J. Ebert
Registration #: 59197

THIS SPACE RESERVED FOR METRO-DADE USE ONLY

PRODUCT REVISED
as complying with the Florida
Building Code
Acceptance No. 09-0212.11
Expiration Date MARCH 17, 2015
By Manuel Perez
Miami-Dade Product Control
Division

United States Aluminum
720 Cel-River Road
Rock Hill, SC 29730
200 Singleton Drive
Waxahachie, TX 75165

DRAWN BY	SYSTEM	
G. HALL	SERIES IG500 STORM FRONT ENTRANCE SYSTEM	
DATE 06/26/02		
APPVD BY	DESCRIPTION SUBMITTAL DRAWINGS	
SCALE AS SHOWN	DRAWING NO. USA-2402	SHEET 8 OF 11

SYM	REVISION	DATE	BY
A1	REVISED NOTES PER BCCO AND REVISED ANCHOR NOTES PER LARSON CALCS	11. 25. 09	DCW
A2	REVISED NOTES PER BCCO	01. 14. 10	DCW

A2 ANCHOR NOTES: EACH ● EQUALS =

1. @. 25" STEEL: (1) 3/8" DIA. GRADE 5 BOLT 9/16" EDGE DISANCE.
2. @ 3000 PSI CONCRETE: (1) 3/8" DIA RAWL POWER BOLTS W/2 1/2" EMBED X 4 1/2" DIA EDGE DISTANCE.
3. WOOD: (2) 3/8" DIA GRADE 5 LAG BOLTS W/4" EMBED, 2" APART 1 3/4" EDGE DISTANCE.

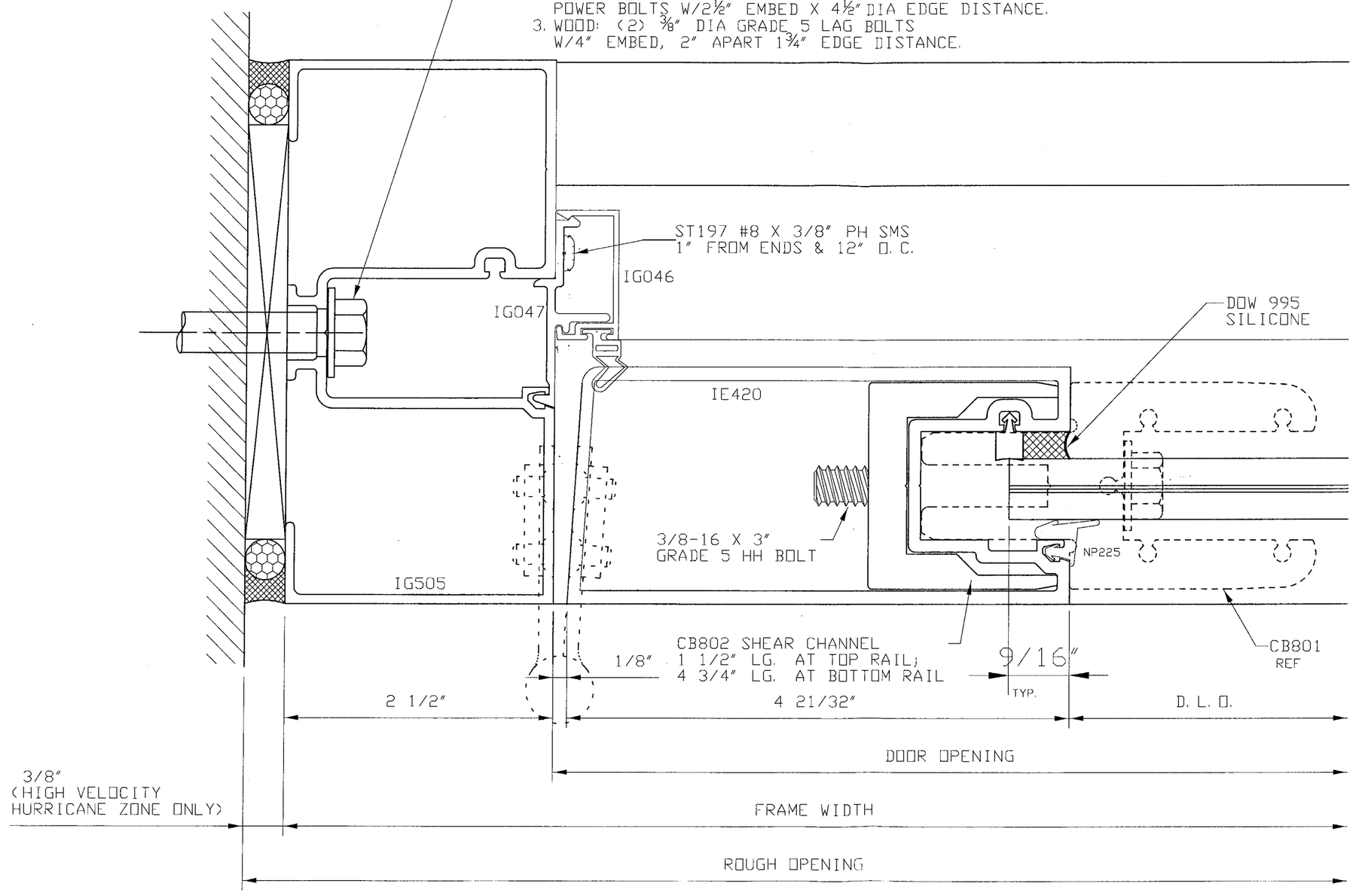

7 VERTICAL DOOR JAMB / MULLION

6063 T5

CYNTHIA J. EBERT
LICENSE
No. 59197
STATE OF
FLORIDA
PROFESSIONAL ENGINEER
2/17/10

THIS SPACE RESERVED FOR STRUCTURAL ENGINEER

A1

Larson Engineering, Inc.
5757 Phantom Drive, Suite 200
St. Louis, MO 63042-2429
314.731.4710 Fax: 314.731.4712
www.larsonengr.com

© 2009 LEI

Project Number: 53090332.000
Florida COA #: 00009803
Cynthia J. Ebert
Registration #: 59197

THIS SPACE RESERVED FOR METRO-DADE USE ONLY

PRODUCT REVISED
as complying with the Florida
Building Code
Acceptance No. 09-0212.11
Expiration Date MARCH 17, 2015
By Manuel Perez
Miami-Dade Product Control
Division

United States Aluminum
- 720 Cel-River Road
  Rock Hill, SC 29730
- 200 Singleton Drive
  Waxahachie, TX 75165

DRAWN BY	SYSTEM	
G. HALL	SERIES IG500 STORM FRONT ENTRANCE SYSTEM	
DATE 06/26/02		
APPVD BY	DESCRIPTION SUBMITTAL DRAWINGS	
SCALE AS SHOWN	DRAWING NO. USA-2402	SHEET 9 OF 11

SYM	REVISION	DATE	BY
A1	REVISED NOTES PER BCCO AND REVISED ANCHOR NOTES PER LARSON CALCS	11.25.09	DCW
A2	REVISED NOTES PER BCCO	01.14.10	DCW

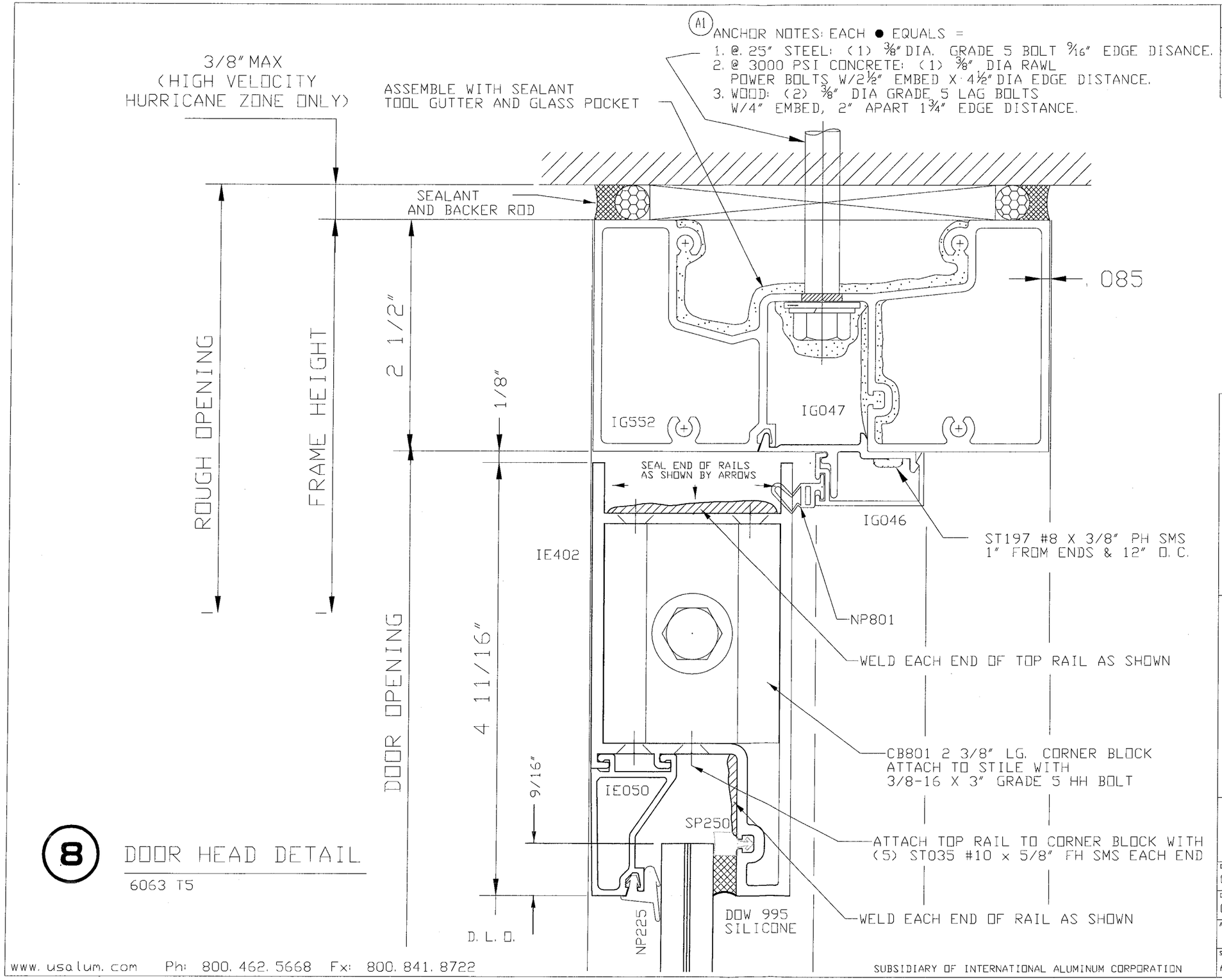

8 DOOR HEAD DETAIL

6063 T5

CYNTHIA J. EBERT LICENSE No. 59197 STATE OF FLORIDA PROFESSIONAL ENGINEER

3/17/10

THIS SPACE RESERVED FOR STRUCTURAL ENGINEER

A1

Larson Engineering, Inc.
5757 Phantom Drive, Suite 200
St. Louis, MO 63042-2429
314.731.4710 Fax: 314.731.4712
www.larsonengr.com

© 2009 LEI

Project Number: 53090332.000
Florida COA #: 00009803
Cynthia J. Ebert
Registration #: 59197

THIS SPACE RESERVED FOR METRO-DADE USE ONLY

PRODUCT REVISED
as complying with the Florida Building Code
Acceptance No. 09-0212.11
Expiration Date MARCH 17, 2015
By Manuel Sera
Miami-Dade Product Control Division

United States Aluminum
720 Cel-River Road
Rock Hill, SC 29730
200 Singleton Drive
Waxahachie, TX 75165

DRAWN BY	SYSTEM	
G. HALL	SERIES IG500 STORM FRONT ENTRANCE SYSTEM	
DATE 06/26/02		
APPVD BY	DESCRIPTION SUBMITTAL DRAWINGS	
SCALE AS SHOWN	DRAWING NO USA-2402	SHEET 10 OF 11

SYM	REVISION	DATE	BY
A2	ADDED SHEET REVISED NOTES PER BCCO AND REVISED ANCHOR NOTES PER LARSON CALCS	01. 14. 10	DCW

WATER THRESHOLD ASSEMBLY

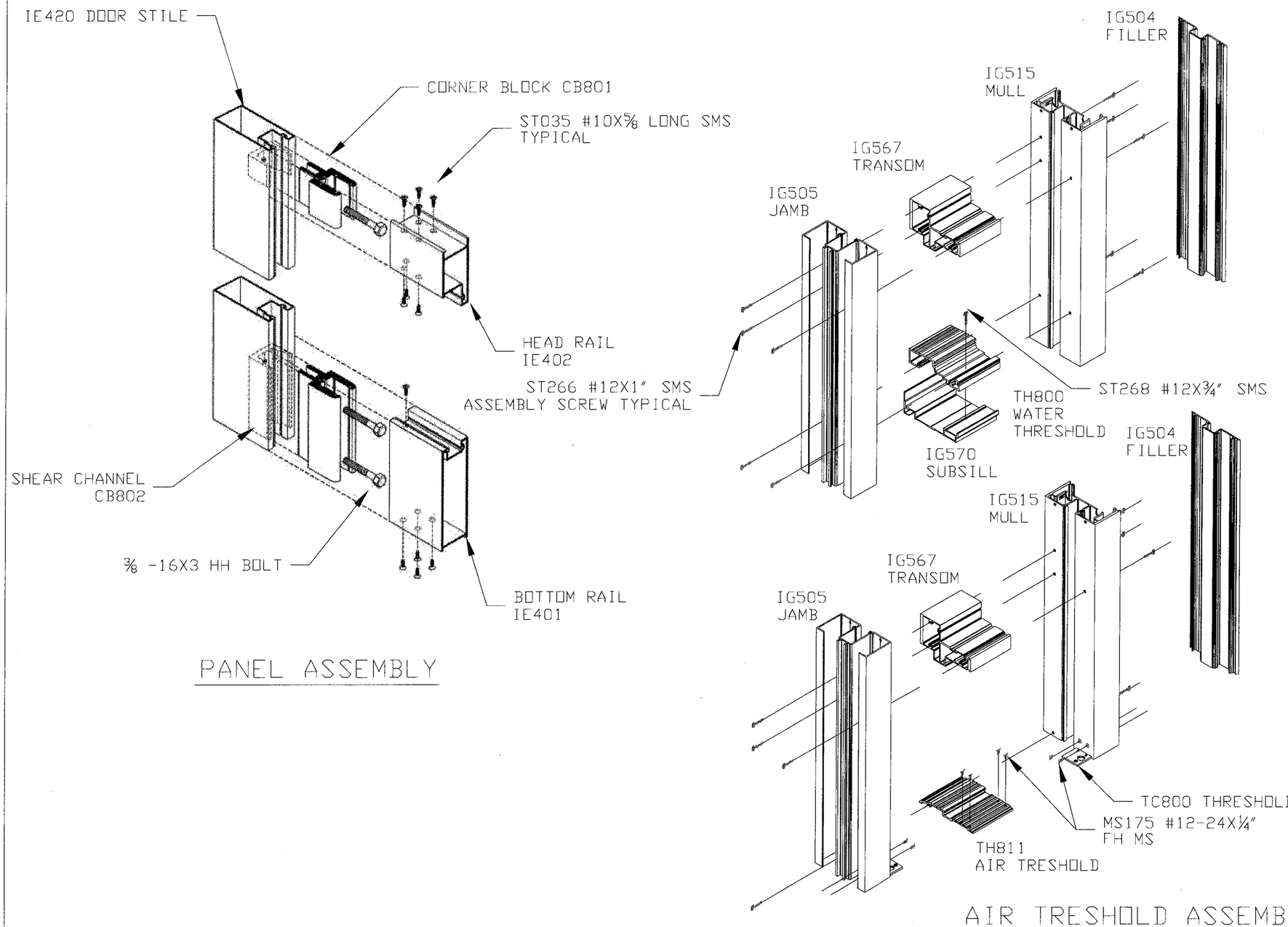

PANEL ASSEMBLY

AIR TRESHOLD ASSEMBLY

CYNTHIA J. EBERT
LICENSE
No. 59197
STATE OF FLORIDA
PROFESSIONAL ENGINEER
2/17/10

THIS SPACE RESERVED FOR STRUCTURAL ENGINEER

A1

Larson Engineering, Inc.
5757 Phantom Drive, Suite 200
St. Louis, MO 63042-2429
314.731.4710 Fax: 314.731.4712
www.larsonengr.com

© 2009 LEI

Project Number: 53090332.000
Florida COA #: 00009803
Cynthia J. Ebert
Registration #: 59197

THIS SPACE RESERVED FOR METRO-DADE USE ONLY

PRODUCT REVISED
as complying with the Florida Building Code
Acceptance No. 09-0212.11
Expiration Date MARCH 17, 2015
By Manuel Perez
Miami Dade Product Control Division

United States Aluminum
720 Cel-River Road
Rock Hill, SC 29730
200 Singleton Drive
Waxahachie, TX 75165

DRAWN BY	SYSTEM	
DCW	SERIES IG500 STORM FRONT ENTRANCE SYSTEM	
DATE 01. 14. 10		
APPVD BY	DESCRIPTION SUBMITTAL DRAWINGS	
SCALE AS SHOWN	DRAWING NO. USA-2402	SHEET 11 OF 11