MIAMI-DADE COUNTY
BUILDING CODE COMPLIANCE OFFICE (BCCO)
PRODUCT CONTROL DIVISION

MIAMI-DADE COUNTY, FLORIDA
METRO-DADE FLAGLER BUILDING
140 WEST FLAGLER STREET, SUITE 1603
MIAMI, FLORIDA 33130-1563
(305) 375-2901 FAX (305) 372-6339
www.miamidade.gov/buildingcode

NOTICE OF ACCEPTANCE (NOA)

Kawneer Company, Inc.
555 Guthridge Court
Norcross, GA 30092

SCOPE:

This NOA is being issued under the applicable rules and regulations governing the use of construction materials. The documentation submitted has been reviewed by Miami-Dade County Product Control Division and accepted by the Board of Rules and Appeals (BORA) to be used in Miami Dade County and other areas where allowed by the Authority Having Jurisdiction (AHJ).

This NOA shall not be valid after the expiration date stated below. The Miami-Dade County Product Control Division (In Miami Dade County) and/or the AHJ (in areas other than Miami Dade County) reserve the right to have this product or material tested for quality assurance purposes. If this product or material fails to perform in the accepted manner, the manufacturer will incur the expense of such testing and the AHJ may immediately revoke, modify, or suspend the use of such product or material within their jurisdiction. BORA reserves the right to revoke this acceptance, if it is determined by Miami-Dade County Product Control Division that this product or material fails to meet the requirements of the applicable building code. This product is approved as described herein, and has been designed to comply with the Florida Building Code, including the High Velocity Hurricane Zone.

DESCRIPTION: Series "IR-501 Flush, Dry and Wet Glazed" Aluminum Storefront System – L.M.I.

APPROVAL DOCUMENT: Drawing No. **1461**, titled "IR501 Aluminum Store Front System - Large Missile Impact" Sheets 1 thru 9 of 9, dated 07/14/06, with revision B1 dated 01/21/09, prepared by W. W. Schaefer Engineering & Consulting, P.A., signed and sealed by Warren W. Schaeffer, P.E., bearing the Miami-Dade County Product Control Revision stamp with the Notice of Acceptance number and expiration date by the Miami-Dade County Product Control Division.

MISSILE IMPACT RATING: Large Missile Impact Resistant

LABELING: Each unit shall bear a permanent label with the manufacturer's name or logo, city, state and following statement: "Miami-Dade County Product Control Approved", unless otherwise noted herein.

RENEWAL of this NOA shall be considered after a renewal application has been filed and there has been no change in the applicable building code negatively affecting the performance of this product.

TERMINATION of this NOA will occur after the expiration date or if there has been a revision or change in the materials, use, and/or manufacture of the product or process. Misuse of this NOA as an endorsement of any product, for sales, advertising or any other purposes shall automatically terminate this NOA. Failure to comply with any section of this NOA shall be cause for termination and removal of NOA.

ADVERTISEMENT: The NOA number preceded by the words Miami-Dade County, Florida, and followed by the expiration date may be displayed in advertising literature. If any portion of the NOA is displayed, then it shall be done in its entirety.

INSPECTION: A copy of this entire NOA shall be provided to the user by the manufacturer or its distributors and shall be available for inspection at the job site at the request of the Building Official.

This NOA **revises NOA # 07-0731.06** and consists of this page 1 and evidence pages E-1 and E-2, as well as approval document mentioned above.

The submitted documentation was reviewed by **Manuel Perez, P.E.**

MIAMI-DADE COUNTY APPROVED

Kawneer Company, Inc.

NOTICE OF ACCEPTANCE: EVIDENCE SUBMITTED

A. DRAWINGS

1. Manufacturer's die drawings and sections.
2. Drawing No. **1461**, titled "IR501 Aluminum Store Front System - Large Missile Impact" Sheets 1 thru 9 of 9, dated 07/14/06 with revision B1 dated 01/21/09, prepared by W. W. Schaeffer Engineering & Consulting, P.A., signed and sealed by Warren W. Schaeffer, P.E.

B. TESTS

1. Test reports on: 1) Air Infiltration Test, per FBC, TAS 202-94
   2) Uniform Static Air Pressure Test, Loading per FBC TAS 202-94
   3) Water Resistance Test, per FBC, TAS 202-94
   4) Large Missile Impact Test per FBC, TAS 201-94
   5) Cyclic Wind Pressure Loading per FBC, TAS 203-94
   6) Forced Entry Test, per FBC 2411 3.2.1, TAS 202-94

   along with marked-up drawings and installation diagram of series IR-501 aluminum flush glazed storefront system, specimens #1, 2, 2A, 5, 6, 7 and 8, by Hurricane Test Laboratory LLC, Test Report No. **HTL-G049-0201.08**, dated 03/07/07, signed and sealed by Vinu Abraham, P.E.
2. Test reports on 1) Air Infiltration Test, per FBC, TAS 202-94
   2) Uniform Static Air Pressure Test, Loading per FBC TAS 202-94
   3) Water Resistance Test, per FBC, TAS 202-94
   4) Large Missile Impact Test per FBC, TAS 201-94
   5) Cyclic Wind Pressure Loading per FBC, TAS 203-94
   6) Forced Entry Test, per FBC 2411 3.2.1, TAS 202-94

   along with marked-up drawings and installation diagram of a series IR-501 aluminum flush glazed storefront system, prepared by Hurricane Test Laboratory LLC, Test Report No. **HTL-G049-0303.07**, dated 03/07/07 with amendment letter dated 09/07/07, all, signed and sealed by Vinu Abraham, P.E.
3. Test reports on 1) Air Infiltration Test, per FBC, TAS 202-94
   2) Uniform Static Air Pressure Test Loading per FBC, TAS 202-94
   3) Water Resistance Test, per FBC, TAS 202-94
   4.) Large Missile Impact Test, FBC, TAS 201-94
   5.) Cyclic Loading Test, per FBC, TAS 203-94

   along with marked-up drawings and installation diagram of a series IR-501 aluminum flush glazed storefront system, prepared by Hurricane Test Laboratory LLC, Test Reports No. **HTL-G049-1201.05** and **HTL-0049-0111.06** dated 04/18/06, signed and sealed by Vinu Abraham, P.E.

Manuel Perez, P.E.
Product Control Examiner
NOA No. 09-0218.07
Expiration Date: February 15, 2012
Approval Date: April 15, 2009

NOTICE OF ACCEPTANCE: EVIDENCE SUBMITTED

C. CALCULATIONS

1. Revised anchor verification calculations and structural analysis, complying with FBC-2004 and 2007, dated 02/10/09, prepared by W. W. Schaeffer Engineering & Consulting, P.A., signed and sealed by Warren W. Schaeffer, P.E.
   Complies with ASTM E1300-98/02

D. QUALITY ASSURANCE

1. Miami Dade Building Code Compliance Office (BCCO).

E. MATERIAL CERTIFICATIONS

1. Notice of Acceptance No. **05-1208.02** issued to E. I. DuPont de Nemours for "Dupont Butacite PVB", approved on 01/05/06 and expiring on 12/11/2010
2. Notice of Acceptance No. **06-0216.06** issued to Solutia Inc. for "Saflex IIIG clear & colored interlayer", approved on 05/04/06 expiring on 05/21/2011.
3. Notice of Acceptance No. **07-1116.04** issued to **E.I. DuPont DeNemours & Co.**, Inc. for their "**DuPont SentryGlas ® Plus**" dated 01/03/08, expiring on 01/14/12.
4. TREMCO Part No. **TR-14271E** EPDM exterior glazing gasket complying with ASTM C864 Option II exceptions, ASTM D412 1600 PSI, D395B 22 HRS 158°F.

F. STATEMENTS

1. Statement letter of no financial interest, dated March 09, 2009, signed and sealed by Warren W. Schaeffer, P.E.
2. Statement letter of conformance, dated March 09, 2009, signed and sealed by Warren W. Schaeffer, P.E.
3. Laboratory compliance letter for Test Report No. **HTL-G049-0201-08**, issued by Hurricane Test Laboratory, Inc., dated October 14, 2008, signed Jose E. Colon, E.I.
4. Test Proposal #**07-3288**, dated 10/11/07, issued by BCCO, signed by Ishaq I. Chanda, P.E.

G. OTHER

1. Notice of Acceptance No. **07-0731.06**, issued to Kawneer Company, Inc. for their Series "IR-501 Flush, Dry Glazed Aluminum Storefront System – L.M.I., approved on 11/15/07 and expiring on 02/15/12.

Manuel Perez, P.E.
Product Control Examiner
NOA No. 09-0218.07
Expiration Date: February 15, 2012
Approval Date: April 15, 2009

GENERAL NOTES:

1. THESE STORE FRONT SYSTEMS HAVE BEEN TESTED, ANALYZED & APPROVED FOR DESIGN PRESSURES NOT TO EXCEED THOSE SHOWN IN THE "ALLOWABLE DESIGN PRESSURE TABLE(S).
2. OPENINGS, BUCKING & BUCKING FASTENERS MUST BE PROPERLY DESIGNED & INSTALLED TO TRANSFER WIND LOADS TO THE STRUCTURE.
3. ALL HARDWARE & FASTENERS SHALL BE IN ACCORDANCE WITH THESE DRAWINGS & SHALL NOT VARY UNLESS SPECIFICALLY MENTIONED ON THE DRAWINGS. SPECIFIED ANCHOR EMBED TO BASE MATERIAL SHALL BE BEYOND WALL FINISH OR STUCCO.
4. THE DETAILS & SPECIFICATIONS SHOWN HEREIN REPRESENT THE PRODUCTS TESTED & PROPOSED FOR WATER, AIR, IMPACT, CYCLIC & UNIFORM STATIC AIR PRESSURE TESTING IN CONFORMANCE WITH THE FLORIDA BUILDING CODE PROTOCALS TAS-201, 202 & 203 FOR LARGE MISSILE IMPACT DOORS.
5. THESE STORE FRONT SYSTEMS HAVE BEEN DESIGNED IN ACCORDANCE WITH AND MEET THE REQUIREMENTS OF THE FLORIDA BUILDING CODE (FBC) INCLUDING HIGH VELOCITY HURRICANE ZONES (HVHZ).
6. IMPACT SHUTTERS ARE NOT REQUIRED WITH THESE STORE FRONTS.
7. ALL ANCHORS SECURING WINDOW/DOOR FRAME TO PRESSURE TREATED BUCKS OR WOOD FRAMING SHALL BE CAPABLE OF RESISTING CORROSION CAUSED BY THE PRESSURE TREATING CHEMICALS IN THE WOOD.
8. DETERMINE THE POSITIVE & NEGATIVE DESIGN LOADS TO USE WHEN REFERENCING THESE DOCUMENTS IN ACCORDANCE WITH THE GOVERNING CODE AND GOVERNING WIND VELOCITY. FOR WIND LOAD CALCULATIONS IN ACCORDANCE WITH THE FLORIDA BUILDING CODE, A DIRECTIONALITY FACTOR OF Kd = 0.85 MAY BE APPLIED WHEN USED IN CONJUNCTION WITH LOAD COMBINATIONS SPECIFIED IN SECTION 2.0 OF THE ASCE 7 STANDARD.
9. NO INCREASE IN ALLOWABLE STRESS HAS BEEN USED IN THE CERTIFICATION OF THIS PRODUCT. WIND LOAD DURATION FACTOR Cd = 1.6 WAS USED FOR WOOD SCREW ANALYSIS ONLY.
10. MATERIALS, INCLUDING BUT NOT LIMITED TO STEEL SCREWS, THAT COME INTO CONTACT WITH OTHER DISSIMILAR MATERIALS SHALL MEET THE REQUIREMENTS OF FLORIDA BUILDING CODE CHAPTER 20.

CORNER & FRAME END CONSTRUCTION:

FRAME HEAD CORNER (APPLICABLE TO ITEM #1A): HEAD IS SQUARE CUT, BUTTED TO SIDE, FASTENED WITH THREE(3) NO. 12 X 1" PHTFS FASTENERS THROUGH THE SIDE MEMBER INTO THE HEAD MEMBER SCREW SPLINES & SEALED WITH SILICONE.

FRAME HEAD CORNER (APPLICABLE TO ITEM #1B): HEAD IS MITER CUT, BUTTED TO SIDE, FASTENED WITH TWO(2) NO. 12 X 1 1/2" PHTFS FASTENERS THROUGH THE SIDE MEMBER INTO THE HEAD MEMBER SCREW SPLINES & SEALED WITH SILICONE.

FRAME SILL CORNER: SILL IS SQUARE CUT, BUTTED TO SIDE, FASTENED WITH THREE(3) NO. 12 X 1" PHTFS FASTENERS THROUGH THE SIDE MEMBER INTO THE SILL MEMBER SCREW SPLINES & SEALED WITH SILICONE.

FRAME DOOR JAMB SILL CORNER: SILL IS SQUARE CUT, BUTTED TO SIDE, FASTENED WITH 1 JAMB PIVOT ASSEMBLY. EACH PIVOT ASSEMBLY WAS FASTENED TO TO THE SIDE WITH THREE(3) NO. 12-24 X 5/8" FHMS. THE THRESHOLD IS THEN FASTENED TO PIVOT ASSEMBLY WITH TWO(2) NO. 12-24 X 3/8" FHMS & SEALED WITH SILICONE.

HORIZONTAL FRAME MULLION END (APPLICABLE TO ITEMS #6A & #7): HORIZONTAL IS SQUARE CUT, BUTTED TO SIDE, FASTENED WITH THREE(3) NO. 12 X 1" SS PHTFS FASTENERS THROUGH THE SIDE MEMBER INTO THE MULLION MEMBER SCREW SPLINES & SEALED WITH SILICONE.

HORIZONTAL FRAME MULLION END (APPLICABLE TO ITEM #6B): HORIZONTAL IS SQUARE CUT, BUTTED TO SIDE, JOINED VIA A SHEAR BLOCK (PART #21). THE SHEAR BLOCK IS FASTENED TO THE VERTICAL FRAME MEMBER WITH FOUR(4) NO. 12 X 1 7/8" FHTF TYPE B SCREWS. THE HORIZONTAL MEMBER IS FASTENED TO THE SHEAR BLOCK WITH THREE(3) NO. 12 X 1" FHTF TYPE AB SCREWS. EACH CORNER IS SEALED WITH DOW 795 SILICONE SEALANT.

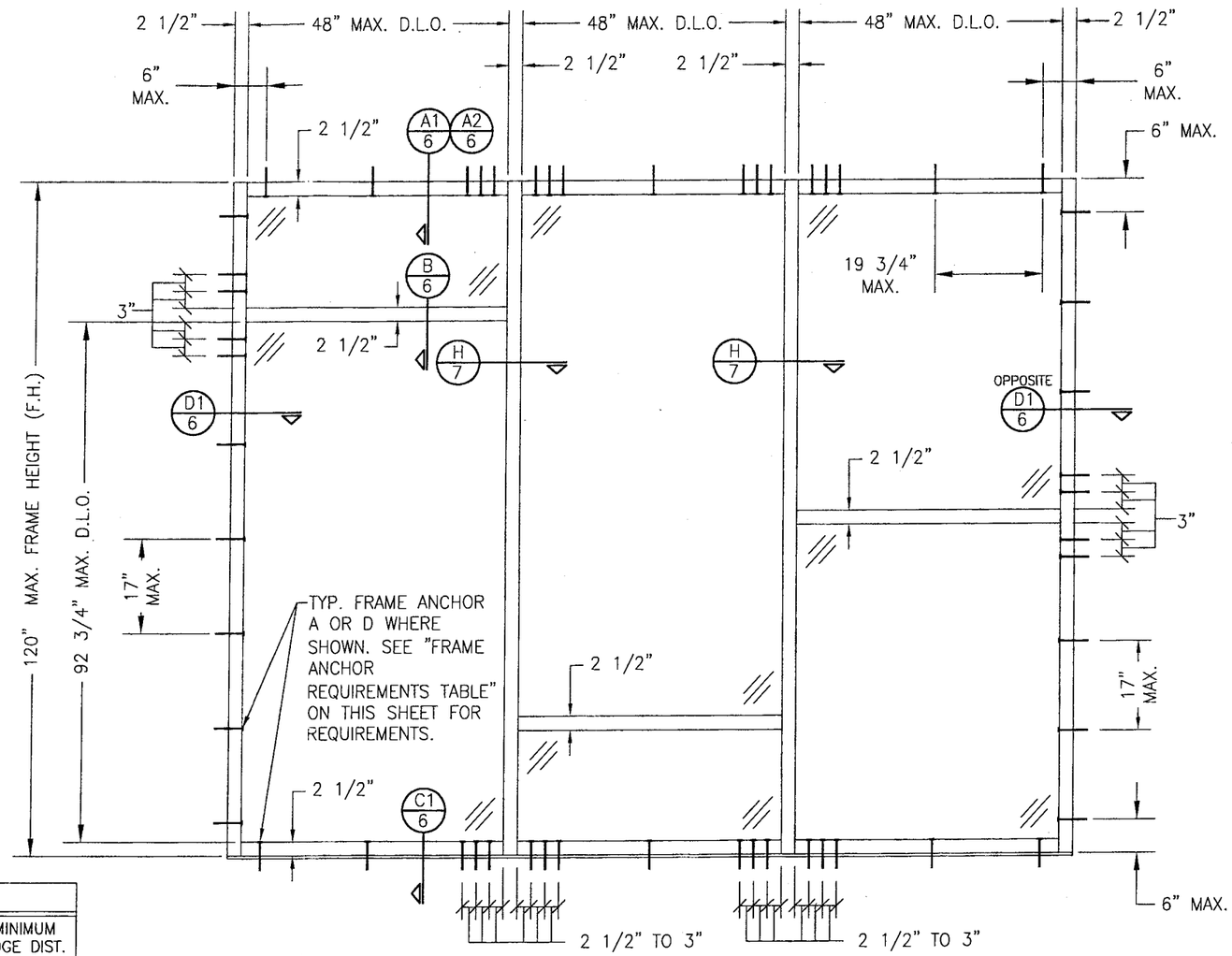

EXTERIOR ELEVATION
MULTIPLE FIXED PANEL STORE FRONT ASSEMBLY
(WITH ANCHOR TYPE "A" OR "D" TO WOOD OR METAL STUD)

SCALE: 1/2"=1'-0"

HORIZONTAL STACKING & OVERALL UNIT WIDTH IS UNLIMITED PROVIDING D.L.O. DOES NOT EXCEED 48" WIDE AT EACH PANEL. NUMBER OF VERTICAL PANELS IS UNLIMITED BUT MUST FIT INSIDE MAXIMUM FRAME HEIGHT SHOWN.

FRAME ANCHOR REQUIREMENTS TABLE

ANCHOR TYPE	OPENING TYPE (SUBSTRATE)	JAMB TO OPENING FASTENER TYPE	MINIMUM EMBED	MINIMUM EDGE DIST.
A	2X_ WOOD FRAME OR BUCK (MIN. GR. 3 & G=0.55)	NO. 12 SMS SCREWS	1 1/4"	3/4"
B	MIN. 1/8" THICK A36 STEEL (MIN. Fy = 36 ksi)	(2) 1/4-20 SELF DRILLING/TAPPING SCREW	FULL	3/4"
C	MIN. 3000 P.S.I. CONCRETE	(1) 1/4" CONCRETE SCREW	1 1/2"	2 1/2"
D	MIN. 16 GA. 33 KSI METAL STUD	(2) 1/4-20 SELF DRILLING/TAPPING SCREW	FULL	1/2"
E	MIN. C90 BLOCK	(1) 1/4" CONCRETE SCREW	1 1/4"	2 1/2"
(4) F	MIN. 3000 P.S.I. CONCRETE	(3) 3/8" WEDGE/SLEEVE ANCHOR	2 1/2"	3"

(1) CONCRETE SCREWS SHALL BE ELCO ULTRACONS, ITW RAMSET/RED HEAD TAPCONS OR HILTI KWIK-CON II (HARDENED STEEL OR S.S.).
(2) SELF DRILLING & SELF TAPPING SCREWS SHALL BE MIN. GRADE 5 CORRISION RESISTANT STEEL
(3) WEDGE/SLEEVE ANCHORS SHALL BE RAMSET/RED HEAD DYNABOLT, HILTI KWIK-BOLT 3, OR POWERS RAWL POWER BOLT (STEEL OR S.S.)
(4) ANCHOR TYPE "F" IS ONLY APPLICABLE FOR USE WITH THE SILL ANCHOR BLOCK AT THE VERTICAL DOOR MULLION BOTTOM END.

ALLOWABLE DESIGN PRESSURE
+/-65 PSF

PRODUCT REVISED
as complying with the Florida Building Code
Acceptance No. 09-0218.07
Expiration Date FEB. 15, 2012
By Manuel Perez
Miami-Dade Product Control Division

NO.	REVISION DESCRIPTION	BY	DATE
A1	ADDED DRY GLAZED OPTION	W.W.S.	07/02/07
A2	REVISED ANCHOR CONDITIONS	W.W.S.	07/02/09
B1	ADDED RADIUS FRAME MEMBER & NEW TRANSOM BAR	W.R.M.	01/21/09

DRAWN BY: W.R.M. | CHECKED BY: W.W.S.
PLOT: 1=24 | DATE: 07/14/06

DRAWING TITLE: IR501 ALUMINUM STORE FRONT SYSTEM - LARGE MISSILE IMPACT

MANUFACTURER: KAWNEER COMPANY, INC. 555 GUTHRIDGE COURT NORCROSS, GA 30092 770-449-5555

CONSULTANTS: W. W. SCHAEFER ENGINEERING & CONSULTING, P.A.
8895 N. MILITARY TRAIL; SUITE C-204
PALM BEACH GARDENS, FL 33410
PHONE: 561-775-4902 FAX: 561-775-4903

CERTIFICATION: FEB 09 2009
WARREN W. SCHAEFER, P.E. P.E. NO. 44135

DRAWING NO. 1461 | REV. B
SHEET NO. 1 OF 9

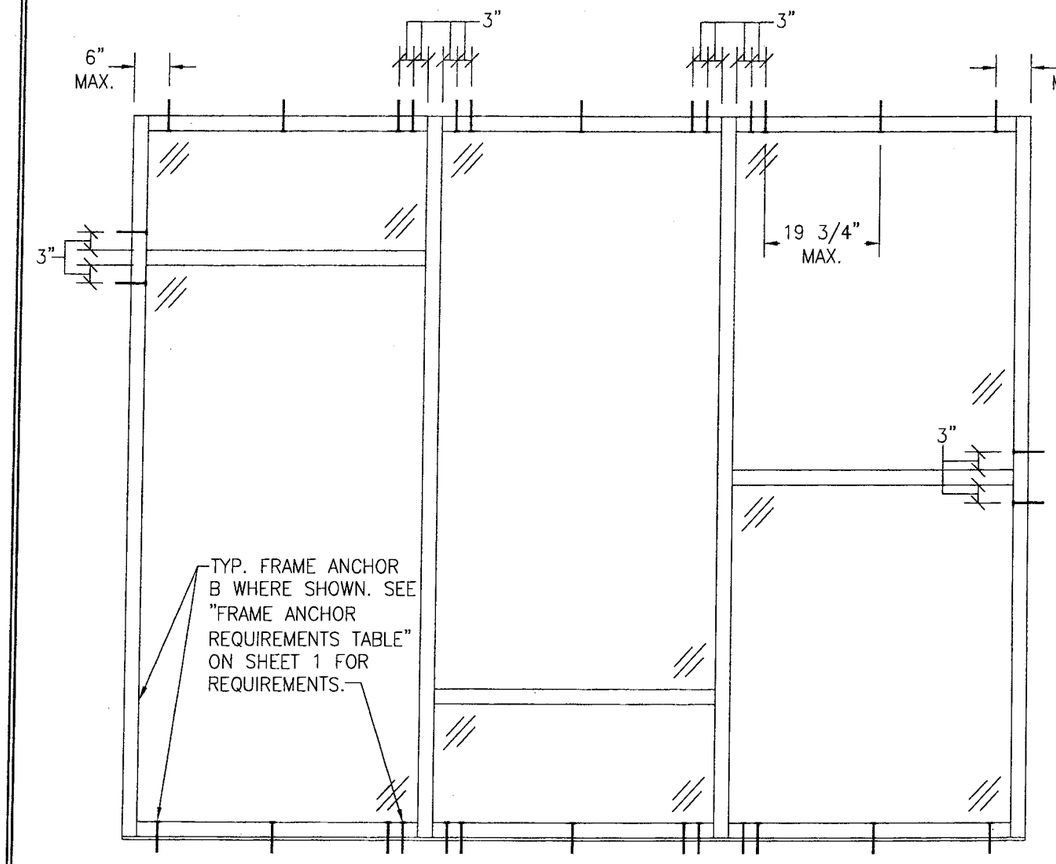

EXTERIOR ELEVATION
MULTIPLE FIXED PANEL STORE FRONT ASSEMBLY
(WITH ANCHOR TYPE "B" TO STEEL)
SCALE: 1/2"=1'-0"
FOR ALL FRAMING & D.L.O. DIMENSIONS AND SECTIONS, SEE ELEVATION ON SHEET 1.

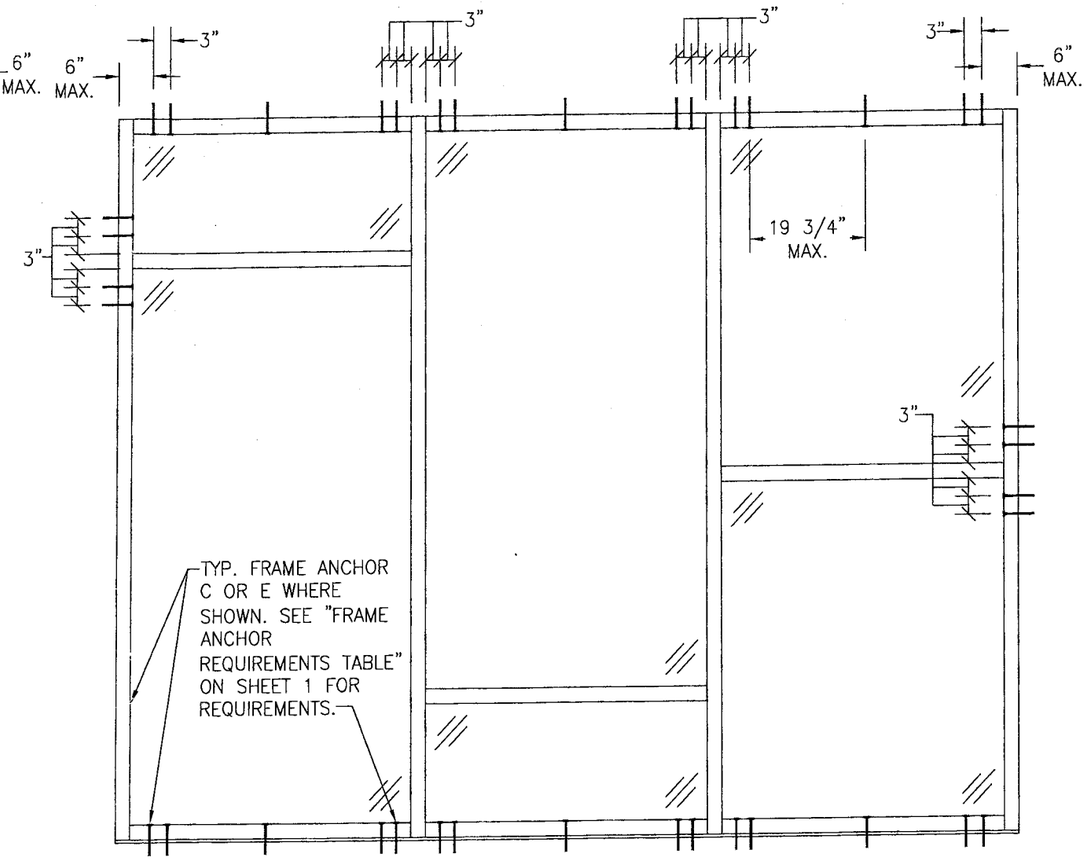

EXTERIOR ELEVATION
MULTIPLE FIXED PANEL STORE FRONT ASSEMBLY
(WITH ANCHOR TYPE "C" & "E" TO CONCRETE/CMU)
SCALE: 1/2"=1'-0"
FOR ALL FRAMING & D.L.O. DIMENSIONS AND SECTIONS, SEE ELEVATION ON SHEET 1.
NOTE: CMU IS APPLICABLE ONLY AT SIDES.

ALLOWABLE DESIGN PRESSURE
+/-65 PSF

PRODUCT REVISED
as complying with the Florida Building Code
Acceptance No. 09-0218.07
Expiration Date FEB.15,2012
By Miami-Dade Product Control Division

DRAWN BY: W.R.M.	CHECKED BY: W.W.S.
PLOT: 1=24	DATE: 07/14/06

NO.	REVISION DESCRIPTION	BY	DATE

DRAWING TITLE
IR501 ALUMINUM STORE FRONT SYSTEM – LARGE MISSILE IMPACT

MANUFACTURER
KAWNEER COMPANY, INC.
555 GUTHRIDGE COURT
NORCROSS, GA 30092
770-449-5555

CONSULTANTS
W. W. SCHAEFER ENGINEERING & CONSULTING, P.A.
8895 N. MILITARY TRAIL; SUITE C-204
PALM BEACH GARDENS, FL 33410
PHONE: 561-775-4902 FAX: 561-775-4903

CERTIFICATION
FEB 09 2009
WARREN W. SCHAEFER, P.E.
P.E. NO. 44135

DRAWING NO. 1461
REV. B
SHEET NO. 2 OF 9

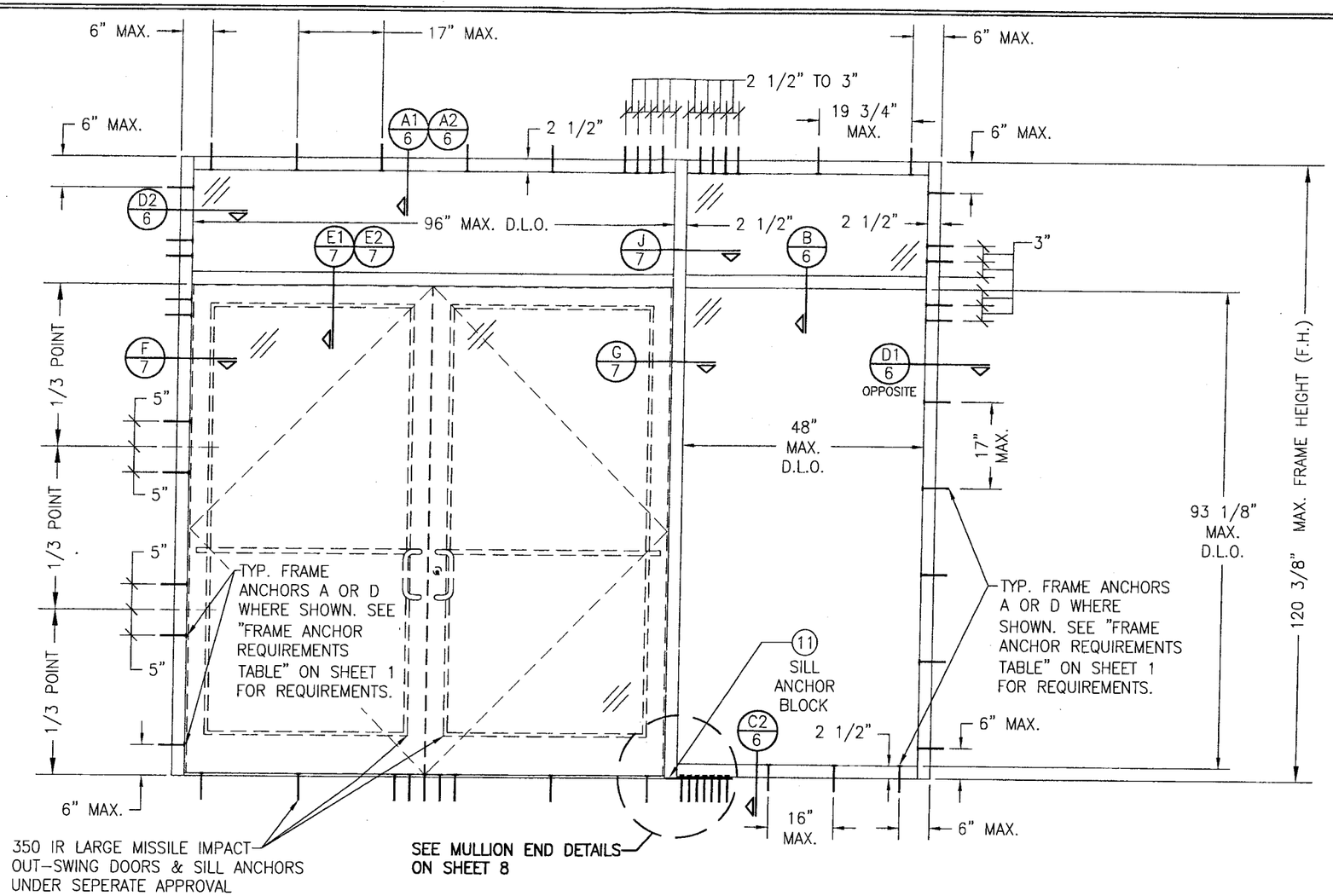

EXTERIOR ELEVATION
STORE FRONT ASSEMBLY WITH DOORS & TRANSOM
(WITH ANCHOR TYPE "A" OR "D" TO WOOD OR METAL STUD)

SCALE: 1/2"=1'-0"

SINGLE SIDELIGHT SHOWN, MULTIPLE SIDELIGHT CONDITION ALSO APPLIES WITH SIDELIGHT AT ONE OR BOTH SIDES.

DOUBLE DOOR CONDITION SHOWN, SINGLE DOOR CONDITION ALSO APPLIES.

HORIZONTAL STACKING & OVERALL UNIT WIDTH IS UNLIMITED. NUMBER OF VERTICAL PANELS IS UNLIMITED BUT MUST FIT INSIDE MAXIMUM FRAME HEIGHT SHOWN.

ALLOWABLE DESIGN PRESSURE
+/-65 PSF

PRODUCT REVISED
as complying with the Florida Building Code
Acceptance No. 09-0218.07
Expiration Date FEB. 15, 2012
By Manuel Perez
Miami Dade Product Control Division

DRAWN BY: W.R.M.	CHECKED BY: W.W.S.
PLOT: 1=24	DATE: 07/14/06

NO.	REVISION DESCRIPTION	BY	DATE

DRAWING TITLE
IR501 ALUMINUM STORE FRONT SYSTEM – LARGE MISSILE IMPACT

MANUFACTURER
KAWNEER COMPANY, INC.
555 GUTHRIDGE COURT
NORCROSS, GA 30092
770-449-5555

CONSULTANTS
W. W. SCHAEFER ENGINEERING & CONSULTING, P.A.
8895 N. MILITARY TRAIL SUITE C-204
PALM BEACH GARDENS, FL 33410
PHONE: 561-775-4902 FAX: 561-775-4903

CERTIFICATION
FEB 09 2009
WARREN W. SCHAEFER, P.E.
P.E. NO. 44135

DRAWING NO.	REV.
1461	B

SHEET NO. 3 OF 9

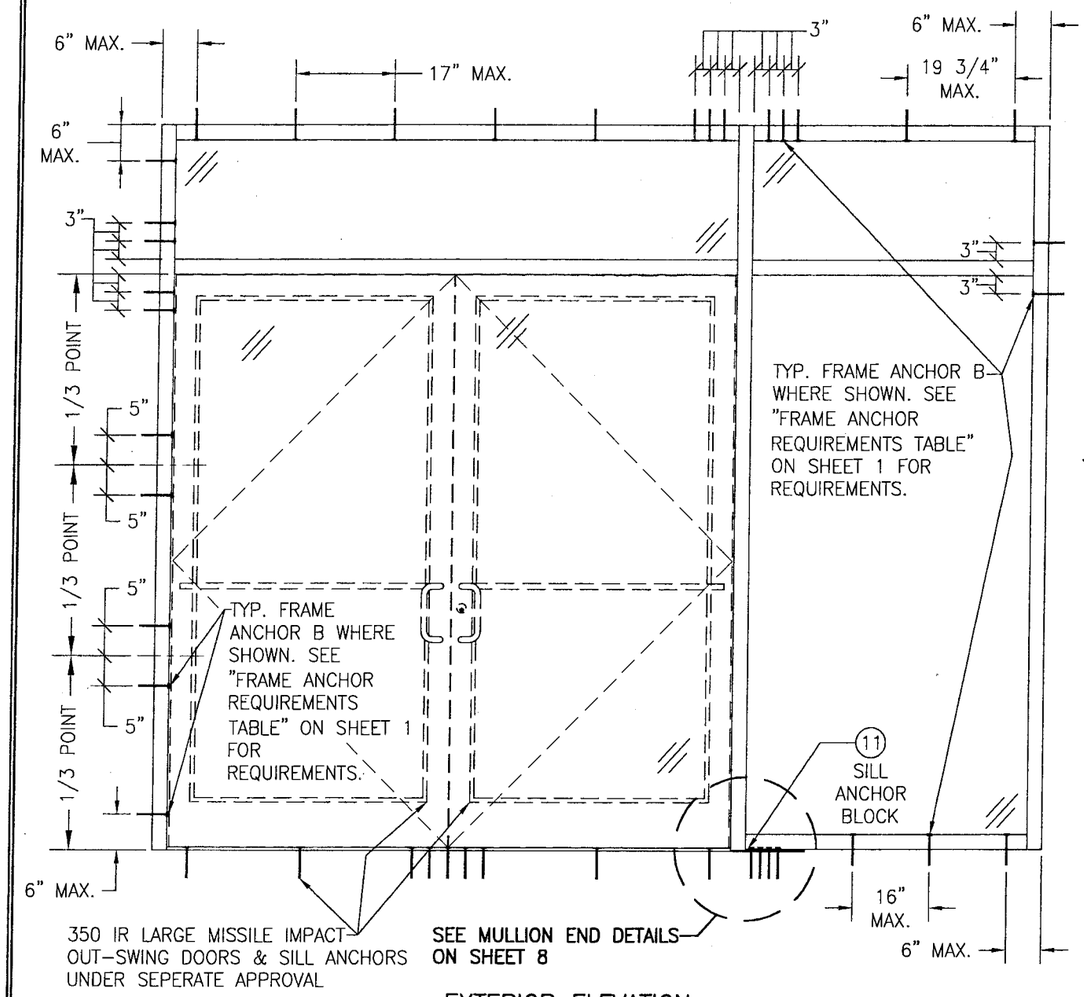

EXTERIOR ELEVATION
STORE FRONT ASSEMBLY WITH DOORS & TRANSOM
(WITH ANCHOR TYPE "B" TO STEEL)

SCALE: 1/2"=1'-0"

FOR ALL FRAMING & D.L.O. DIMENSIONS AND SECTIONS, SEE ELEVATION ON SHEET 3.

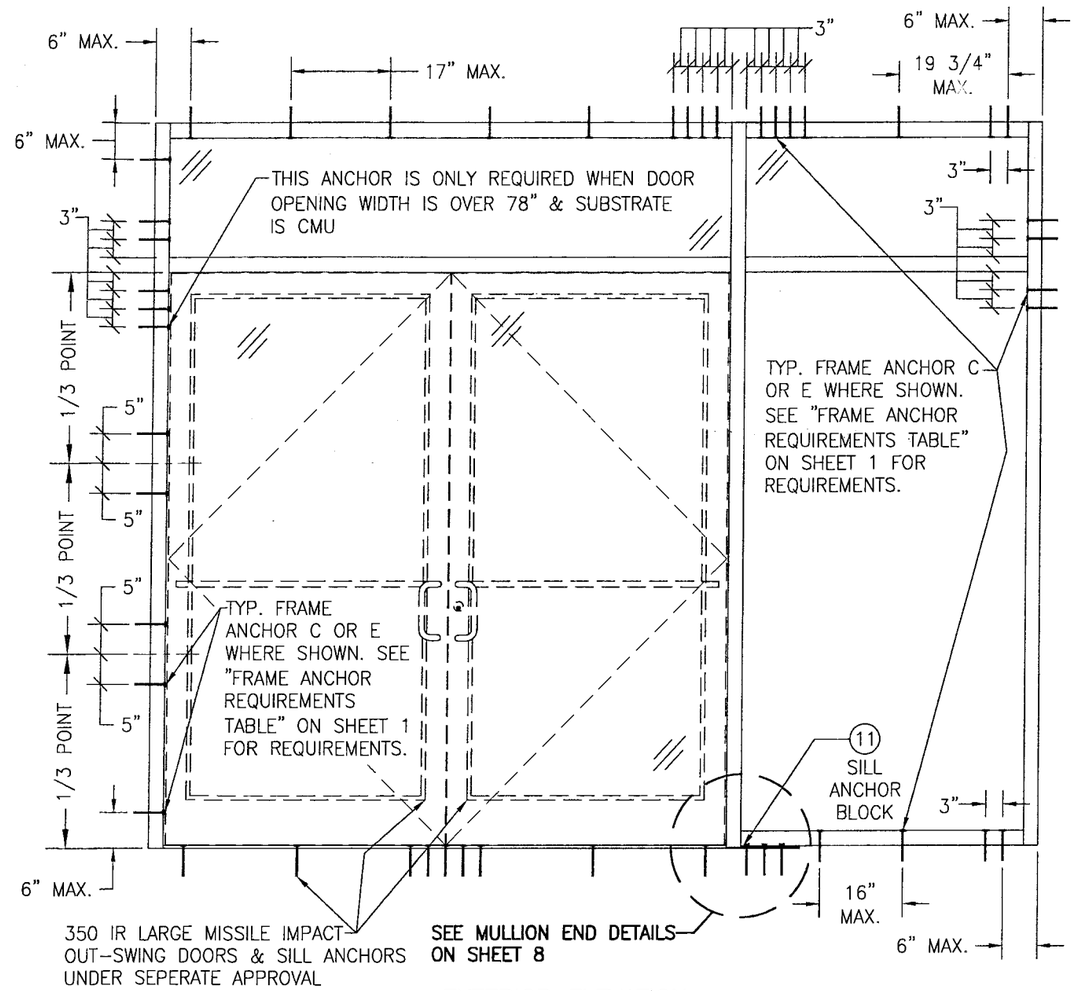

EXTERIOR ELEVATION
STORE FRONT ASSEMBLY WITH DOORS & TRANSOM
(WITH ANCHOR TYPE "C" & "E" TO CONCRETE/CMU)

SCALE: 1/2"=1'-0"

FOR ALL FRAMING & D.L.O. DIMENSIONS AND SECTIONS, SEE ELEVATION ON SHEET 3.

NOTE: CMU IS APPLICABLE ONLY AT SIDES.

ALLOWABLE DESIGN PRESSURE
+/-65 PSF

PRODUCT REVISED
as complying with the Florida Building Code
Acceptance No. 09-0218.07
Expiration Date FEB.15,2012
By Manuel Perez
Miami-Dade Product Control Division

DRAWN BY: W.R.M.	CHECKED BY: W.W.S.
PLOT: 1=24	DATE: 07/14/06

NO.	REVISION DESCRIPTION	BY	DATE

DRAWING TITLE
IR501 ALUMINUM STORE FRONT SYSTEM – LARGE MISSILE IMPACT

MANUFACTURER
KAWNEER COMPANY, INC.
555 GUTHRIDGE COURT
NORCROSS, GA 30092
770-449-5555

CONSULTANTS
W. W. SCHAEFER ENGINEERING & CONSULTING, P.A.
8895 N. MILITARY TRAIL, SUITE C-204
PALM BEACH GARDENS, FL 33410
PHONE: 561-775-4902 FAX: 561-775-4903

CERTIFICATION
FEB 09 2009
WARREN W. SCHAEFER, P.E.
P.E. NO. 44135

DRAWING NO. 1461
REV. B
SHEET NO. 4 OF 9

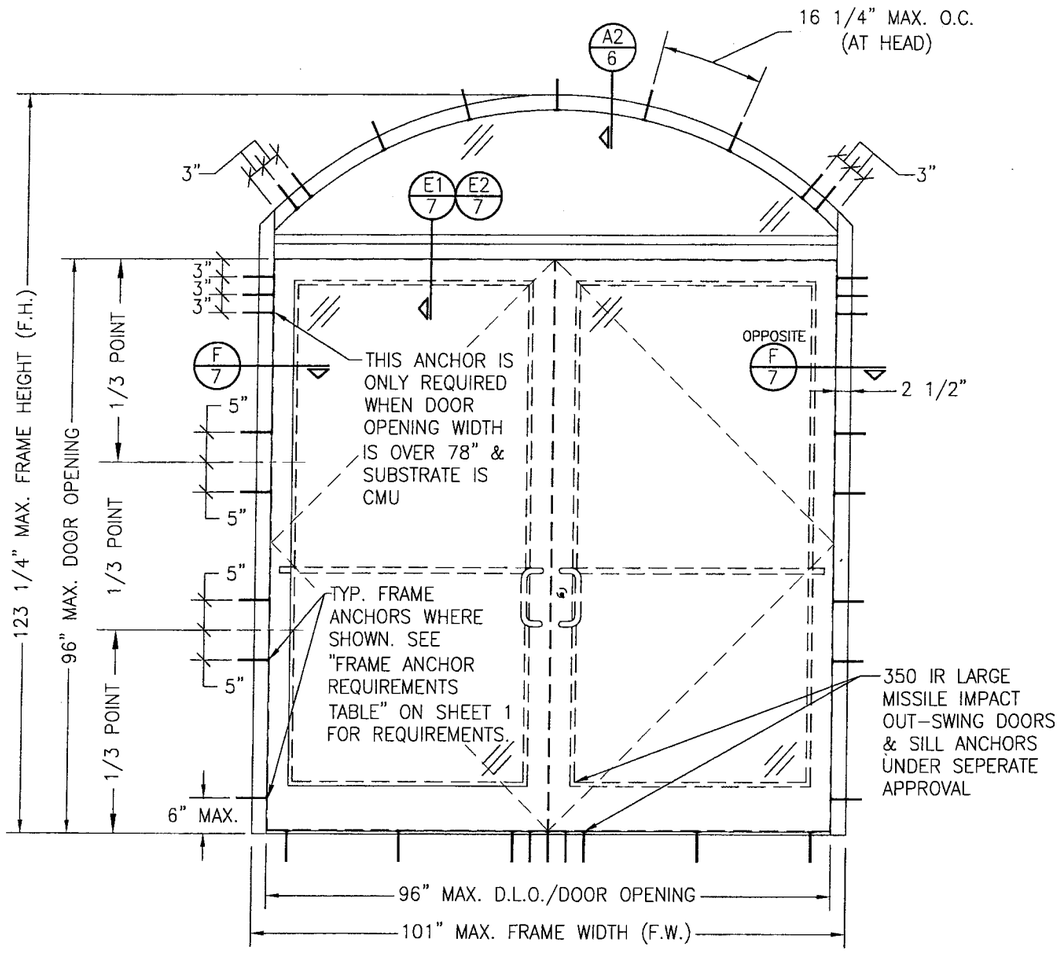

EXTERIOR ELEVATION
STORE FRONT FRAMING WITH DOORS & EYEBROW TRANSOM
(APPLICABLE WITH ALL SUBSTRATES)
(DOUBLE DOOR CONDITION SHOWN, SINGLE DOOR CONDITION ALSO APPLIES)
SCALE: 1/2"=1'-0"

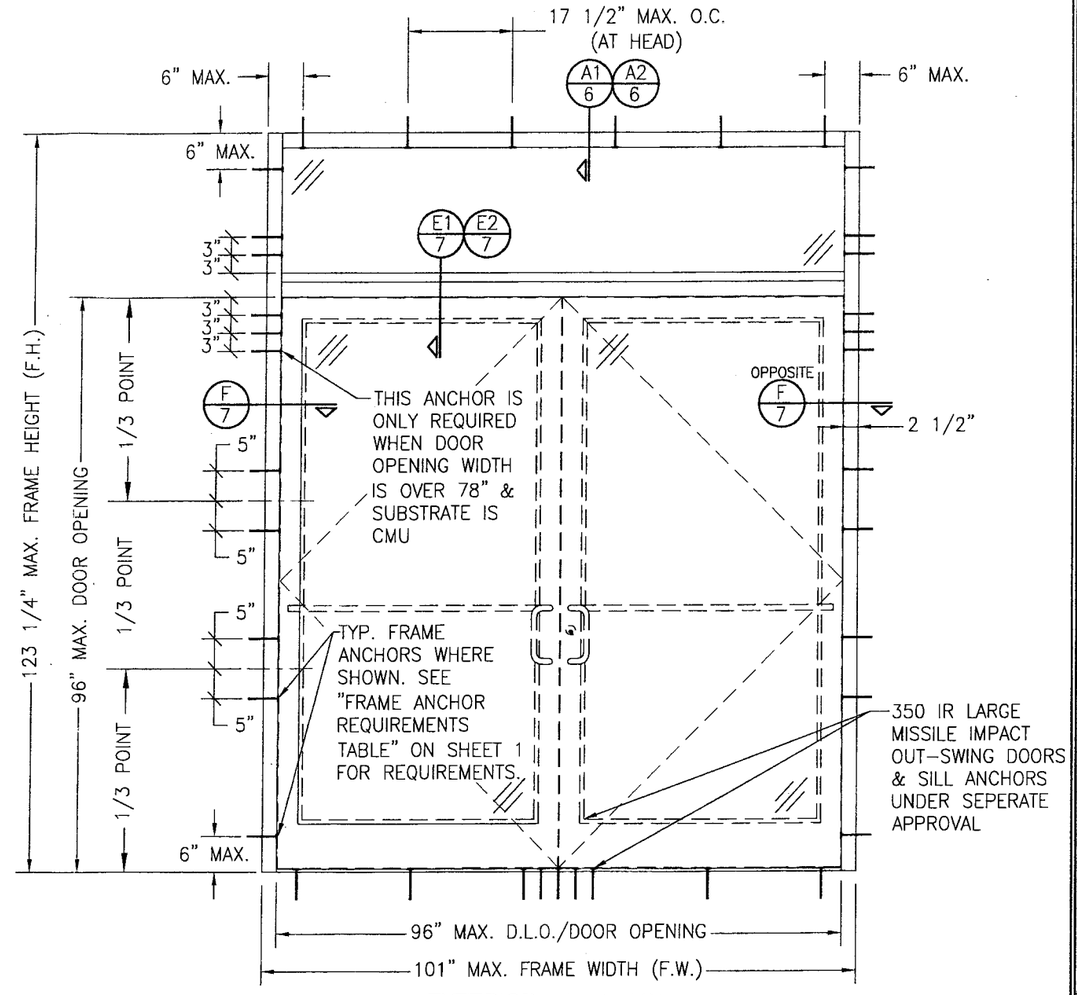

EXTERIOR ELEVATION
STORE FRONT FRAMING WITH DOORS & RECTANGULAR TRANSOM
(APPLICABLE WITH ALL SUBSTRATES)
(DOUBLE DOOR CONDITION SHOWN, SINGLE DOOR CONDITION ALSO APPLIES)
SCALE: 1/2"=1'-0"

ALLOWABLE DESIGN PRESSURE
+/-65 PSF

PRODUCT REVISED
09-0218.07
FEB.15,2012

DRAWN BY: W.R.M.	CHECKED BY: W.W.S.
PLOT: 1=24	DATE: 07/14/06

NO.	REVISION DESCRIPTION	BY	DATE

DRAWING TITLE
IR501 ALUMINUM STORE FRONT SYSTEM – LARGE MISSILE IMPACT

MANUFACTURER
KAWNEER COMPANY, INC.
555 GUTHRIDGE COURT
NORCROSS, GA 30092
770-449-5555

CONSULTANTS
W. W. SCHAEFER ENGINEERING & CONSULTING, P.A.
8895 N. MILITARY TRAIL; SUITE C-204
PALM BEACH GARDENS, FL 33410
PHONE: 561-775-4902 FAX: 561-775-4903

CERTIFICATION
FEB 09 2009
WARREN W. SCHAEFER, P.E.
P.E. NO. 44135

DRAWING NO.	REV.
1461	B

SHEET NO.
5 OF 9

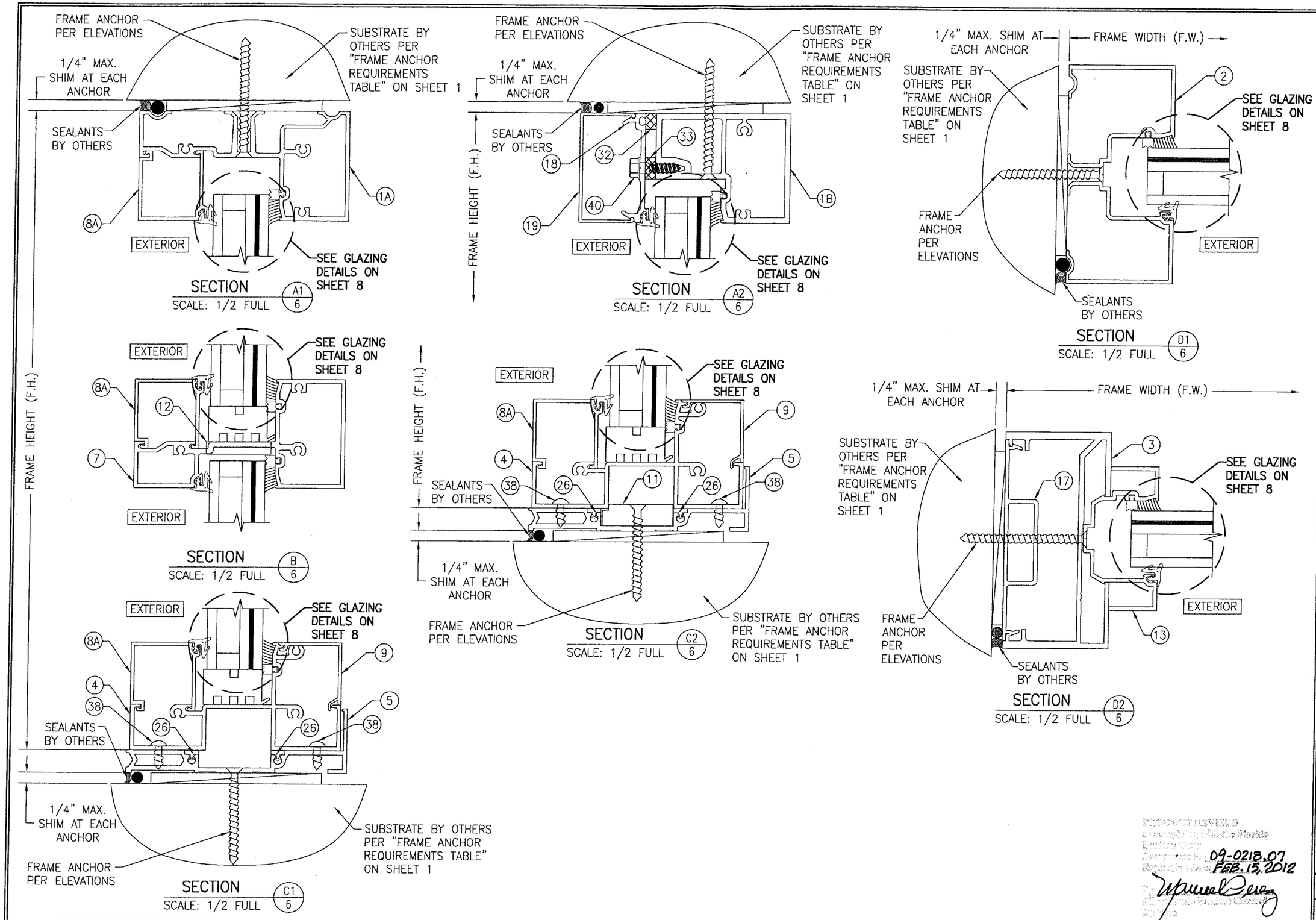

DRAWN BY: W.R.M.	CHECKED BY: W.W.S.
PLOT: 1=2	DATE: 07/14/06

NO.	REVISION DESCRIPTION	BY	DATE

DRAWING TITLE
IR501 ALUMINUM STORE FRONT SYSTEM – LARGE MISSILE IMPACT

MANUFACTURER
KAWNEER COMPANY, INC.
555 GUTHRIDGE COURT
NORCROSS, GA 30092
770-449-5555

CONSULTANTS
W. W. SCHAEFER ENGINEERING & CONSULTING, P.A.
8895 N. MILITARY TRAIL; SUITE C-204
PALM BEACH GARDENS, FL 33410
PHONE: 561-775-4902 FAX: 561-775-4903

CERTIFICATION
FEB 09 2009
WARREN W. SCHAEFER, P.E.
P.E. NO. 44135

09-0218.07
FEB. 15, 2012

DRAWING NO. 1461 REV. B

SHEET NO. 6 OF 9

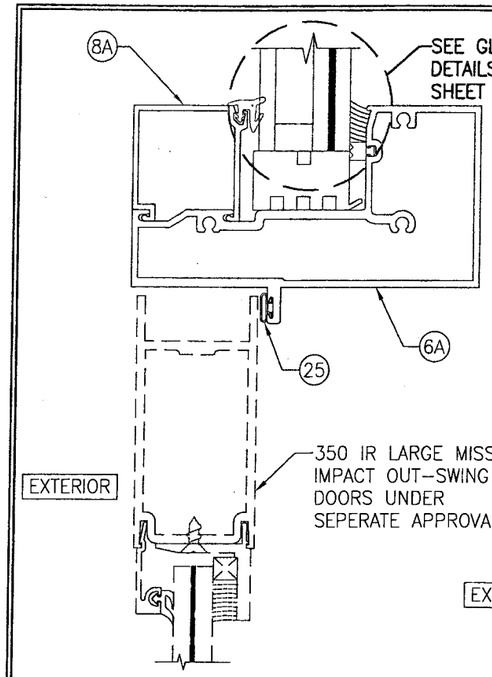

SECTION E1/7
SCALE: 1/2 FULL

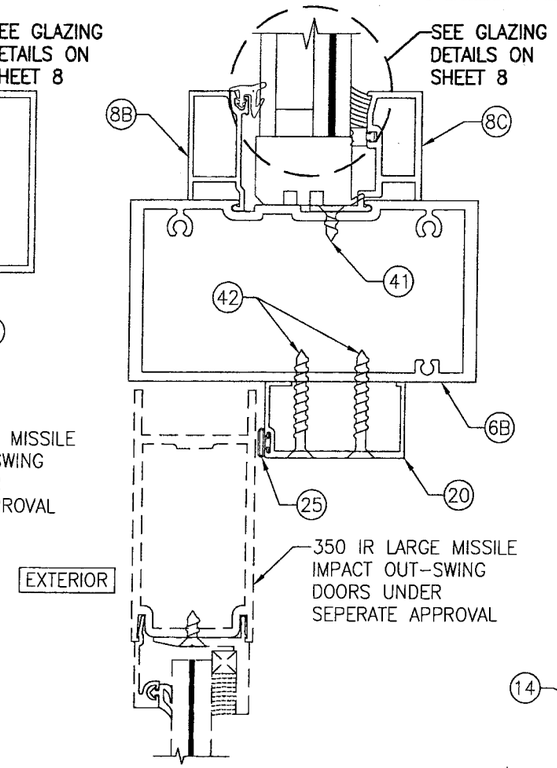

SECTION E2/7
SCALE: 1/2 FULL

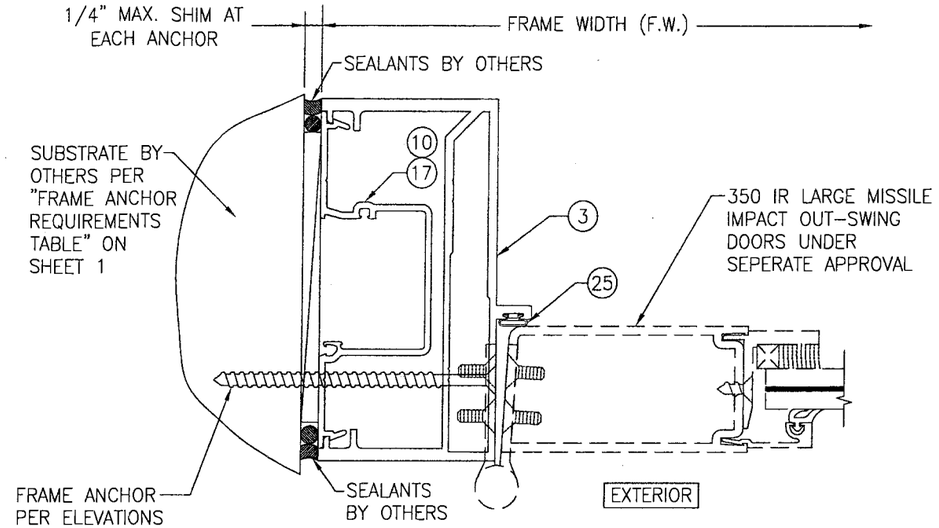

SECTION F/7
SCALE: 1/2 FULL

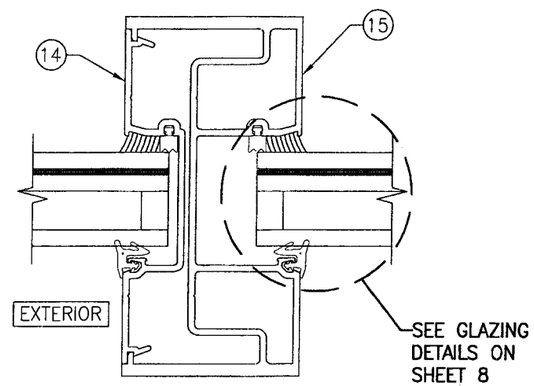

SECTION H/7
SCALE: 1/2 FULL

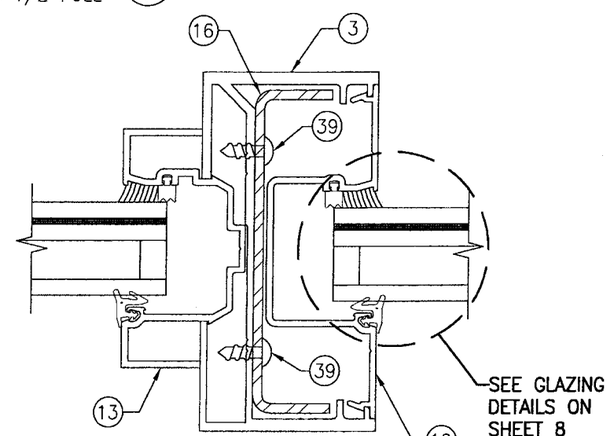

SECTION J/7
SCALE: 1/2 FULL

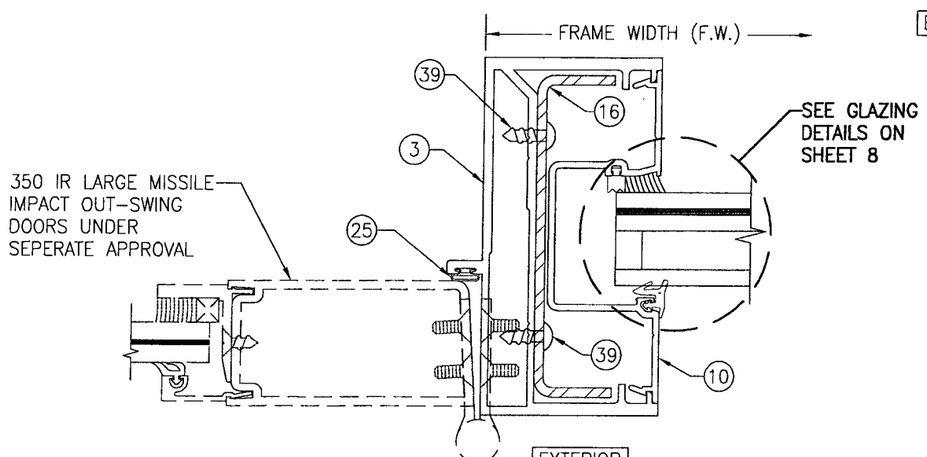

SECTION G/7
SCALE: 1/2 FULL

PRODUCT REVISED
as complying with the Florida Building Code
Acceptance No. 09-0218.07
Expiration Date FEB. 15, 2012
By Manuel Perez
Miami-Dade Product Control Division

DRAWN BY: W.R.M.	CHECKED BY: W.W.S.
PLOT: 1=2	DATE: 07/14/06

NO.	REVISION DESCRIPTION	BY	DATE

DRAWING TITLE
IR501 ALUMINUM STORE FRONT SYSTEM – LARGE MISSILE IMPACT

MANUFACTURER
KAWNEER COMPANY, INC.
555 GUTHRIDGE COURT
NORCROSS, GA 30092
770-449-5555

CONSULTANTS
W. W. SCHAEFER ENGINEERING & CONSULTING, P.A.
8895 N. MILITARY TRAIL, SUITE C-204
PALM BEACH GARDENS, FL 33410
PHONE: 561-775-4902 FAX: 561-775-4903

CERTIFICATION
FEB 09 2009
WARREN W. SCHAEFER, P.E.
P.E. NO. 44135

DRAWING NO. 1461
REV. B
SHEET NO. 7 OF 9

MULLION END CONNECTION DETAILS AT VERTICAL MULLIONS ALONG SIDE DOORS

(TYPICAL AT SILL ONLY)

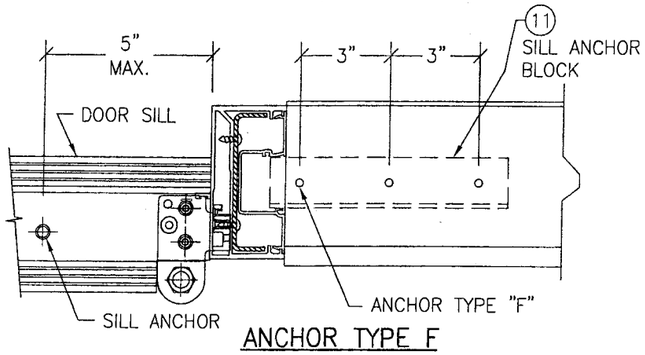

ANCHOR TYPE F

(3 ANCHORS PER SILL ANCHOR BLOCK)

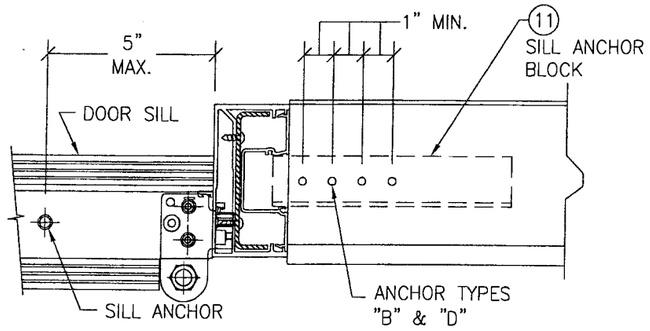

ANCHOR TYPE B

(4 ANCHORS PER SILL ANCHOR BLOCK)

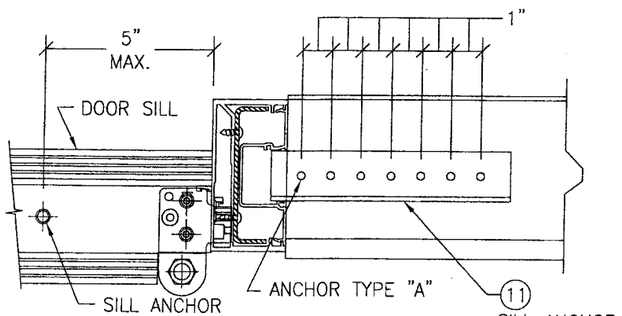

ANCHOR TYPES A & D

(7 ANCHORS PER SILL ANCHOR BLOCK)

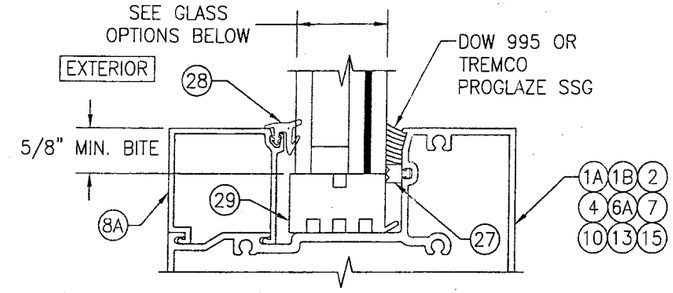

TYP. GLAZING DETAIL

(WET GLAZED; SINGLE GLAZING BEAD CONDITION)

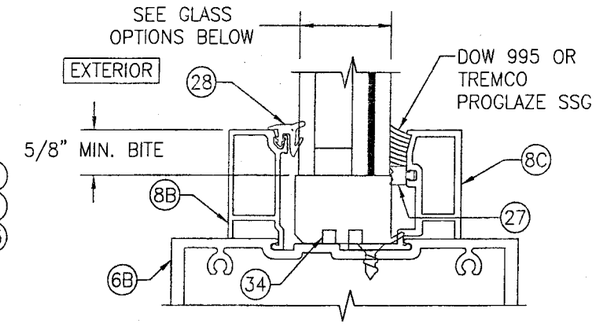

TYP. GLAZING DETAIL

(WET GLAZED; DOUBLE GLAZING BEAD CONDITION)

GLASS OPTIONS (WET GLAZED):

OPTION 1: 1 5/16" THICK LAMINATED GLASS BY SOLUTIA (1/4" HT. ST./1/2" AIR SPACER/1/4" HT. ST./0.09 SOLUTIA SAFLEX IIIG PVB/1/4" HT. ST.)

OPTION 2: 1 5/16" THICK LAMINATED GLASS BY DUPONT (1/4" HT. ST./1/2" AIR SPACER/1/4" HT. ST./0.09 DUPONT BUTICITE PVB/1/4" HT. ST.)

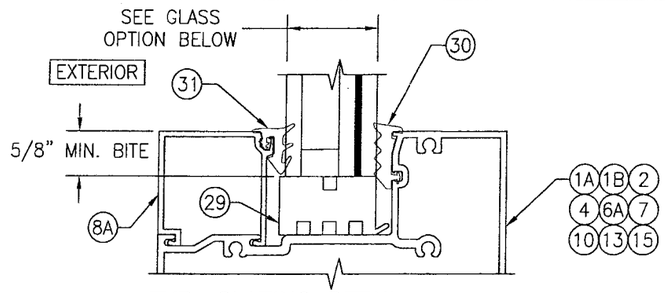

TYP. GLAZING DETAIL

(DRY GLAZED; SINGLE GLAZING BEAD CONDITION)

GLASS OPTION (DRY GLAZED):

OPTION 1: 1 5/16" THICK LAMINATED GLASS BY DUPONT (1/4" HT. ST./1/2" AIR SPACER/1/4" HT. ST./0.09 DUPONT SGP/1/4" HT. ST.)

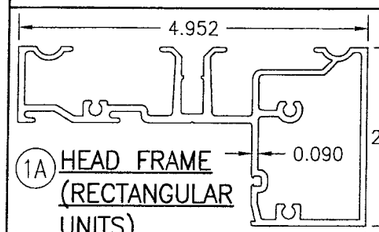

1A HEAD FRAME (RECTANGULAR UNITS)

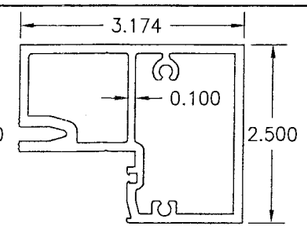

1B HEAD FRAME (RADIUS & RECTANGULAR UNITS)

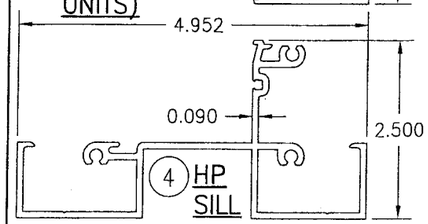

4 HP SILL

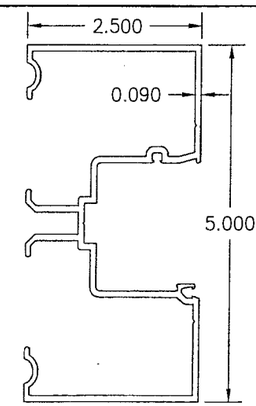

2 JAMB

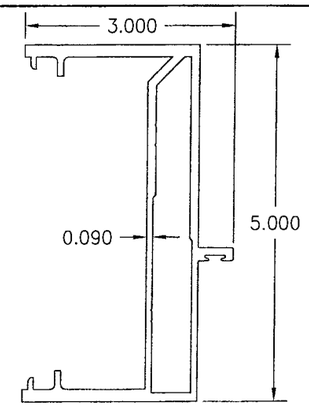

3 DOOR JAMB

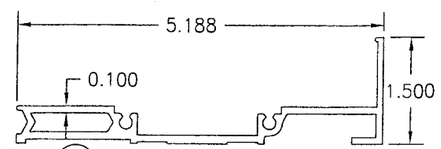

5 HP SILL FLASHING

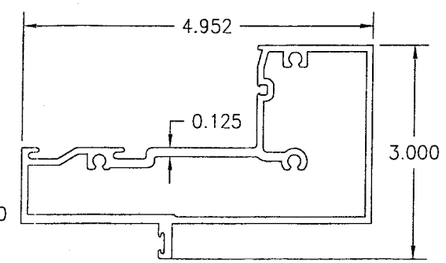

6A TRANSOM BAR WITH FIN

PRODUCT REVISED
in compliance with the Florida Building Code
Acceptance No. 09-0218.07
Expiration Date FEB. 15, 2012
By Miami-Dade Product Control Division

DRAWN BY: W.R.M.	CHECKED BY: W.W.S.
PLOT: 1=2	DATE: 07/14/06

NO.	REVISION DESCRIPTION	BY	DATE

DRAWING TITLE

IR501 ALUMINUM STORE FRONT SYSTEM – LARGE MISSILE IMPACT

MANUFACTURER

KAWNEER COMPANY, INC.
555 GUTHRIDGE COURT
NORCROSS, GA 30092
770-449-5555

CONSULTANTS

W. W. SCHAEFER ENGINEERING & CONSULTING, P.A.
8895 N. MILITARY TRAIL; SUITE C-204
PALM BEACH GARDENS, FL 33410
PHONE: 561-775-4902 FAX: 561-775-4903

CERTIFICATION

FEB 06 2009

WARREN W. SCHAEFER, P.E.
P.E. NO. 44135

DRAWING NO.	REV.
1461	B

SHEET NO. 8 OF 9

ITEM #	PART #	ITEM DESCRIPTION	MANUFACTURER/NOTES
		PARTS	
1A	575-103	HEAD FRAME (RECTANGULAR UNITS)	6063-T6 ALUMINUM
1B	575-163	HEAD FRAME (RADIUS & RECTANGULAR UNITS)	6063-T6 ALUMINUM
2	575-101	JAMB	6063-T6 ALUMINUM
3	575-051	DOOR JAMB	6063-T6 ALUMINUM
4	575-158	HP SILL	6063-T6 ALUMINUM
5	575-157	HP SILL FLASHING	6063-T6 ALUMINUM
6A	575-122	TRANSOM BAR WITH FIN	6063-T6 ALUMINUM
6B	575-162	C.O.C. TRANSOM BAR	6063-T6 ALUMINUM
7	575-115	HORIZONTAL	6063-T6 ALUMINUM
8A	575-104	GLASS STOP	6063-T6 ALUMINUM
8B	575-160	GLASS STOP	6063-T6 ALUMINUM
8C	575-161	GLASS STOP	6063-T6 ALUMINUM
9	575-159	HP COVER	6063-T6 ALUMINUM
10	575-135	DEEP POCKET FILLER	6063-T6 ALUMINUM
11	575-297	SILL ANCHOR BLOCK (AT DOOR JAMB)	6063-T6 ALUMINUM
12	451-105	WATER DEFLECTOR	6063-T6 ALUMINUM
13	575-133	POCKET INSERT	6063-T6 ALUMINUM
14	575-102	POCKET FILLER	6063-T6 ALUMINUM
15	575-116	HW MULLION	6063-T6 ALUMINUM
16	575-310	STEEL REINF.	A36 STEEL
17	575-052	POCKET INSERT	6063-T6 ALUMINUM
18	575-065	PRESSURE PLATE	6063-T6 ALUMINUM
19	575-164	PRESSURE PLATE COVER	6063-T6 ALUMINUM
20	041-045	DOOR STOP	6063-T6 ALUMINUM
21	450-140	SHEAR BLOCK	6063-T6 ALUMINUM
		SEALS AND SEALANTS	
25	027-078	DOOR BULB WEATHERING	ALCRYN
26	127-120	SILL TO FLASHING GASKET	CCN SPONGE
27	127-011	SLIDE IN SPACER	SANTOPRENE
28	027-074	STANDARD PUSH ON GASKET	EPDM
29	127-070	SETTING BLOCK	EPDM
30	127-121	INTERIOR FIXED GASKET	EPDM (DUROMETER = SPONGE)
31	127-126	EXTERIOR PUSH IN GASKET	EPDM (DUROMETER = 70)
32	027-916	GASKET	EPDM (DUROMETER = 70)
33	163-303	THERMAL SEPARATOR	EPDM (DUROMETER = 70)
		FASTENERS	
38	128-396	NO. 12 X 7/16" S.S. PHTF SCREW	2" FROM ENDS & MAX. 18" O.C.
39	128-271	NO. 12 X 5/8" S.S. PHTF SCRERW	4" FROM ENDS (2 ROWS)
40	128-406	1/4" X 1" S.S. HWHTF SCREW	3" FROM ENDS & MAX. 9" O.C.
41	128-910	NO. 10 X 1/2" S.S. FHTF SCREW	3" FROM ENDS & MAX. 18" O.C.
42	028-336	NO. 10 X 1 5/8" S.S. FHTF SCREW	1" FROM ENDS; 4 GROUPED AT MID-SPAN; 16" MAX. BETWEEN

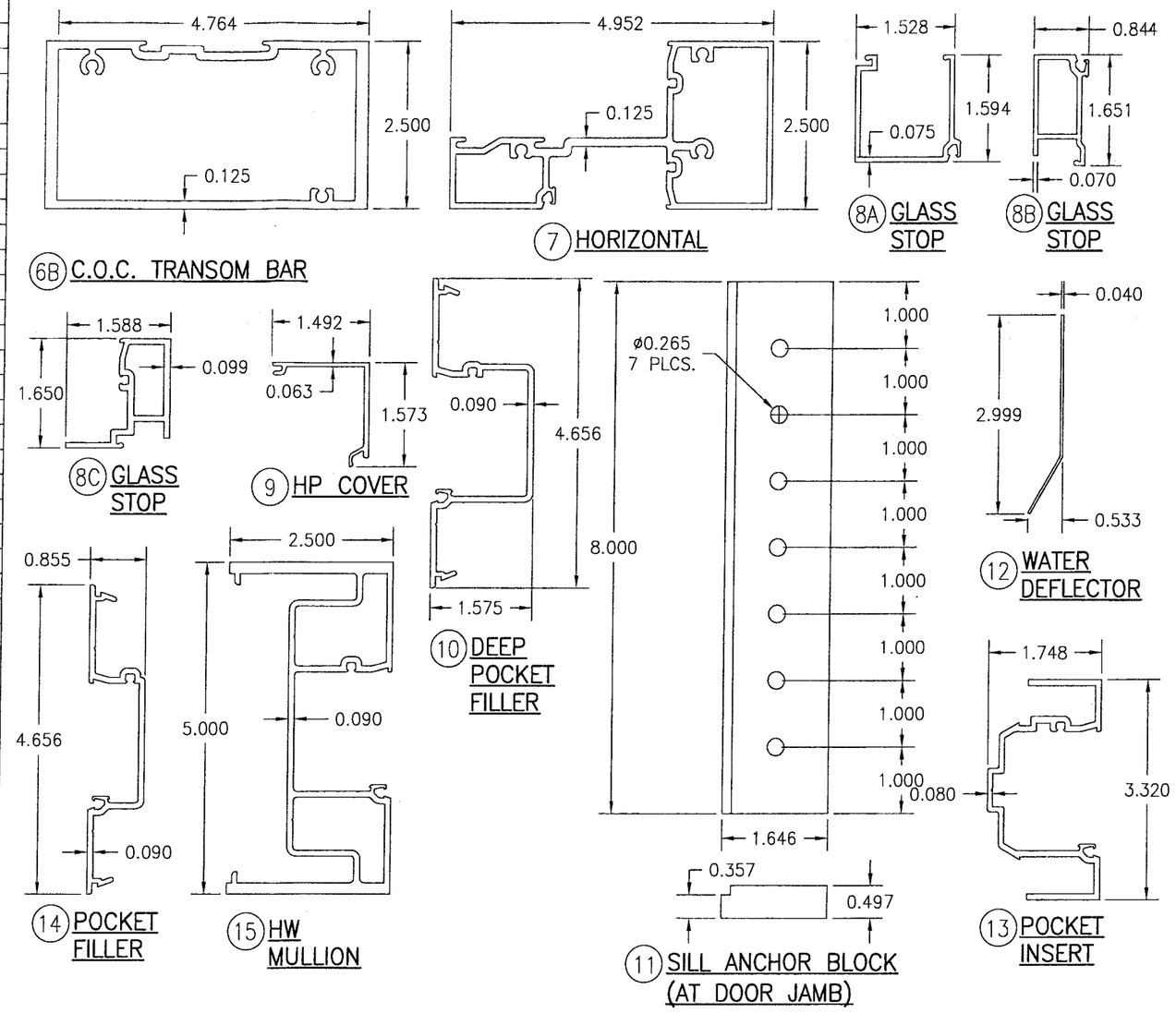

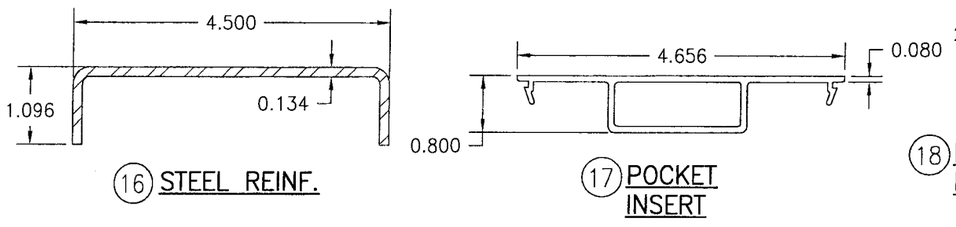

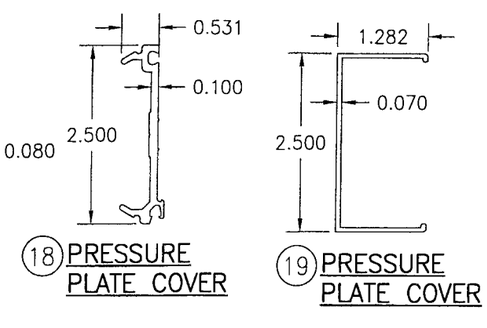

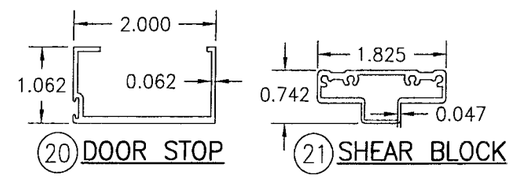

PRODUCT REVISED
as complying with the Florida Building Code
Acceptance No. 09-0218.07
Expiration Date FEB. 15, 2012
By Manuel Perez
Miami-Dade Product Control Division

DRAWN BY: W.R.M.	CHECKED BY: W.W.S.
PLOT: 1=2	DATE: 07/14/06

NO.	REVISION DESCRIPTION	BY	DATE

DRAWING TITLE
IR501 ALUMINUM STORE FRONT SYSTEM – LARGE MISSILE IMPACT

MANUFACTURER
KAWNEER COMPANY, INC.
555 GUTHRIDGE COURT
NORCROSS, GA 30092
770-449-5555

CONSULTANTS
W. W. SCHAEFER ENGINEERING & CONSULTING, P.A.
8895 N. MILITARY TRAIL; SUITE C-204
PALM BEACH GARDENS, FL 33410
PHONE: 561-775-4902 FAX: 561-775-4903

CERTIFICATION
FEB 09 2009
WARREN W. SCHAEFER, P.E.
P.E. NO. 44135

DRAWING NO. 1461
REV. B
SHEET NO. 9 OF 9