MIAMI-DADE COUNTY

BUILDING CODE COMPLIANCE OFFICE (BCCO)
PRODUCT CONTROL DIVISION

MIAMI-DADE COUNTY, FLORIDA
METRO-DADE FLAGLER BUILDING
140 WEST FLAGLER STREET, SUITE 1603
MIAMI, FLORIDA 33130-1563
(305) 375-2901 FAX (305) 375-2908
www.miamidae.gov/buildingcode

NOTICE OF ACCEPTANCE (NOA)

Stanley Security Solutions
6161 East 75th Street
Indianapolis, IN 46250

SCOPE:

This NOA is being issued under the applicable rules and regulations governing the use of construction materials. The documentation submitted has been reviewed by Miami-Dade County Product Control Division and accepted by the Board of Rules and Appeals (BORA) to be used in Miami Dade County and other areas where allowed by the Authority Having Jurisdiction (AHJ).

This NOA shall not be valid after the expiration date stated below. The Miami-Dade County Product Control Division (In Miami Dade County) and/or the AHJ (in areas other than Miami Dade County) reserve the right to have this product or material tested for quality assurance purposes. If this product or material fails to perform in the accepted manner, the manufacturer will incur the expense of such testing and the AHJ may immediately revoke, modify, or suspend the use of such product or material within their jurisdiction. BORA reserves the right to revoke this acceptance, if it is determined by Miami-Dade County Product Control Division that this product or material fails to meet the requirements of the applicable building code.

This product is approved as described herein, and has been designed to comply with the Florida Building Code, including the High Velocity Hurricane Zone.

DESCRIPTION: Series HC2200, HC2300 & HC2800 Vertical Rod Panic Exit Devices and HC2100 Rim Exit Device w/ HC822Steel reinforced Mullion-Component Approval-Impact

APPROVAL DOCUMENT: Drawing No. **"SSS0001",** titled "HC2100, HC2200, HC2300 & HC2800 ", sheets 1 through 6 of 6, prepared by PTC, LLC, dated 02/05/09, signed and sealed by Robert J. Amoruso, P.E., bearing the Miami-Dade County Product Control Renewal stamp with the Notice of Acceptance number and expiration date by the Miami-Dade County Product Control Division.

MISSILE IMPACT RATING: Large and Small Missile Impact

Limitation:

1. This component is approved to be used as an alternate with an approved single or double Steel doors, having current NOA (Notice of Acceptance).
2. Lowest design pressure of doors or this component may control.
3. See respective design pressure tables and limitations of the component approval, in the drawing.
4. Electrical device installation is not part of this approval, such installation to be reviewed by AHJ.

LABELING: Each unit shall bear a permanent label with the manufacturer's name or logo, city, state and following statement: "Miami-Dade County Product Control Approved", unless otherwise noted herein.

RENEWAL of this NOA shall be considered after a renewal application has been filed and there has been no change in the applicable building code negatively affecting the performance of this product.

TERMINATION of this NOA will occur after the expiration date or if there has been a revision or change in the materials, use, and/or manufacture of the product or process. Misuse of this NOA as an endorsement of any product, for sales, advertising or any other purposes shall automatically terminate this NOA. Failure to comply with any section of this NOA shall be cause for termination and removal of NOA.

ADVERTISEMENT: The NOA number preceded by the words Miami-Dade County, Florida, and followed by the expiration date may be displayed in advertising literature. If any portion of the NOA is displayed, then it shall be done in its entirety.

INSPECTION: A copy of this entire NOA shall be provided to the user by the manufacturer or its distributors and shall be available for inspection at the job site at the request of the Building Official.

This NOA **revises & renews** NOA # **05-1102.12 (Precision Hardware Inc.)** consists of this page 1 and evidence pages E-1, as well as approval document mentioned above.

The submitted documentation was reviewed by **Ishaq I. Chanda, P.E.**

MIAMI-DADE COUNTY APPROVED

6/17/19

NOTICE OF ACCEPTANCE: EVIDENCE SUBMITTED

A. DRAWINGS (transferred from file # **05-1102.12**)

1. Manufacturer's parts and sections drawings.
2. Drawing No. **"SSS0001",** titled "HC2100, HC2200, HC2300 & HC2800 ", sheets 1 through 6 of 6, prepared by PTC, LLC, dated 02/05/09, signed and sealed by Robert J. Amoruso, P.E.

B. TESTS (transferred from file # **05-1102.12**)

1. Test reports on 1) Uniform Static Air Pressure Test, Loading per FBC, TAS 202-94
   2) Large Missile Impact Test per FBC, TAS 201-94
   3) Cyclic Wind Pressure Loading per FBC, TAS 203-94
   4) Forced Entry Test, per FBC 2411.3.2.1 and TAS 202-94

   Along with installation diagrams of a Panic exit devices, prepared by Certified Testing Laboratories Architectural Division, Test Report No(s).**CTLA-1150W**, dated 02/28/04, **CTLA-1150W-1**, dated 03/18/04, **CTLA-1150W-2**, dated 03/18/04 and **CTLA-1150W-3** dated 03/19/04, signed and sealed by Ramesh Patel, P.E.

C. CALCULATIONS

1. Anchor and stress verification calculations dated 02/05/09, prepared by PTC, LLC, signed and sealed by Robert J. Amoruso, P.E.

D. QUALITY ASSURANCE

1. Miami Dade Building Code Compliance Office (BCCO).

E. MATERIAL CERTIFICATIONS

1. None

F. STATEMENTS

1 Statement letter of product compliance to FBC 2007 & "No Financial interest", issued by PTC, LLC, dated Feb 05, 2009, signed & sealed by Robert J. Amoruso, P.E

2 Certificate of Merger of Precision Hardware Inc with Stanley Security Solution Inc, issued by State of Indiana on April 21, 2007.

3 Statement letter of Lab compliance, as part of above test reports.

G. OTHER

1. This NOA **revises & renews** NOA # **05-1102.12** (Former Precision Hardware inc.), expiring 09/13/09.
2. Certificate of Merger issued by State of Indiana.
3. Article of Merger issued by State of Indiana.
4. Former Precision hardware's panic exit device technical publications and catalogs

Ishaq I. Chanda

Ishaq I. Chanda, P.E.
Product Control Examiner
NOA No 09-0218.09
Expiration Date: September 30, 2014
Approval Date: July 01, 2009

SERIES HC2100 RIM EXIT W/HC822 MULLION DOUBLE DOOR APPLICATION

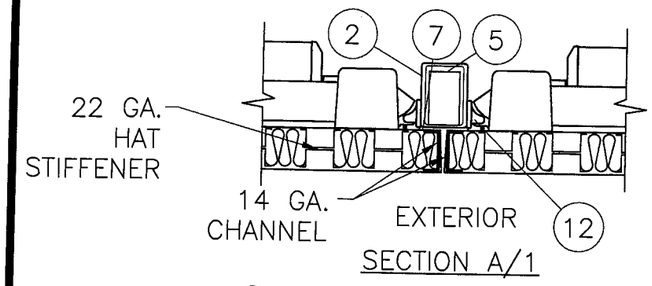

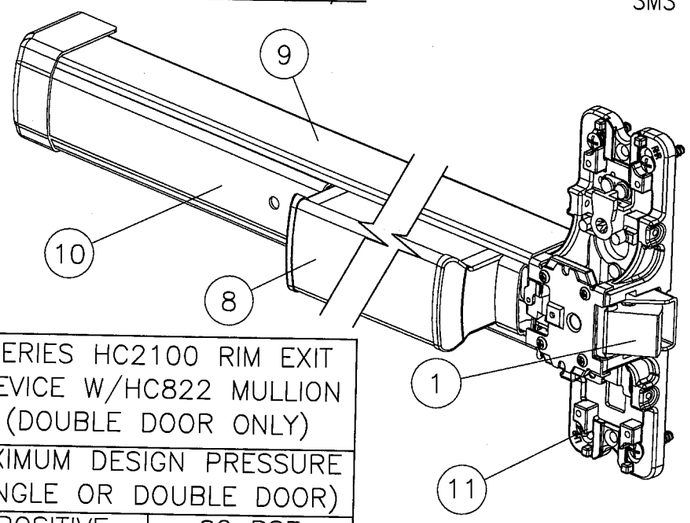

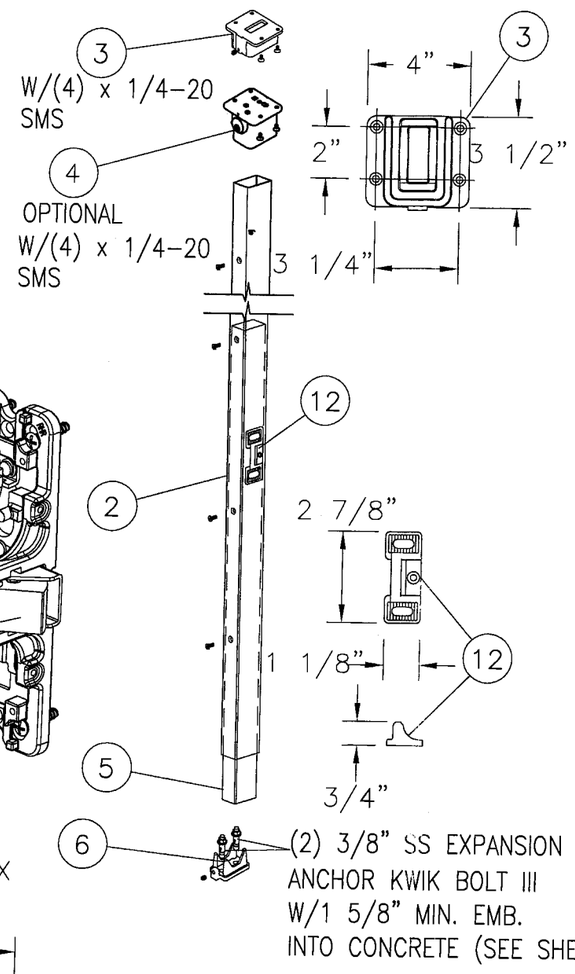

SERIES HC2100 RIM EXIT DEVICE W/HC822 MULLION (DOUBLE DOOR ONLY)	
MAXIMUM DESIGN PRESSURE (SINGLE OR DOUBLE DOOR)	
POSITIVE	80 PSF
NEGATIVE	80 PSF

LIMITATIONS:

1) THIS DEVICE IS APPROVED TO BE EQUAL ALTERNATIVE TO BE USED IN 16 GA. STEEL FRAME & 16 GA. (.053" MIN.) STEEL SINGLE OR DOUBLE COMMERCIAL DOORS, HOLDING CURRENT NOA, THE LOWEST DESIGN PRESSURE RATING OF THE DOORS OR THE COMPONENT SHALL APPLY.
2) THE DOORS SHALL MEET FOLLOWING REQUIREMENTS:
2.1) DOOR SLAB MUST NOT BE WIDER THAN 48" & HIGHER THAN 96". THE DOOR SHALL BE 1-3/4" MIN. OVERALL THICKNESS.
2.2) DOOR SLAB TO BE REINFORCED WITH MIN. SIX (6) 22 GA. STEEL "HAT-STIFFNERS".
2.3) 10 GA. STEEL HINGE REINFORCEMENT AT HINGE STILE & AT THE FRAME.
2.4) FULL-LENGTH 16 GA. STEEL TUBE (2 X "C" NESTED CHANNELS) AT TOP & BOTTOM RAIL OF THE DOORS.
2.5) MIN. 12 GA. STEEL REINFORCEMENT AT STRIKE PLATE.
2.6) MIN. 14 GA. STEEL "C" CHANNEL AT LOCK STILE/HINGE STILE AS APPLICABLE. MIN. 12 GA. STEEL STILES FULL LENGTH TUBE (2 X "C" NESTED CHANNELS) AS APPLICABLE, PLEASE SEE CORRESPONDING DOOR DETAILS.
3.0) ELECTRICAL INSTALLATION IS NOT PART OF THIS APPROVAL & SUCH INSTALLATION MUST BE REVIEWED BY CORRESPONDING BUILDING AUTHORITY.
4) INTERLOCKING ANGLE MUST BE INSTALLED ON ALL INSTALLATIONS AS SHOWN.
5) THIS PRODUCT COMPLIES WITH THE HIGH VELOCITY HURRICANE ZONE (HVHZ) OF THE 2004 AND 2007 FLORIDA BUILDING CODE (FBC).

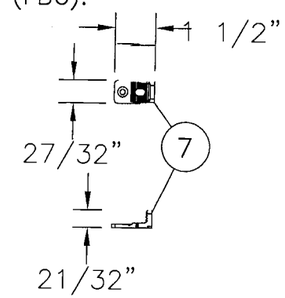

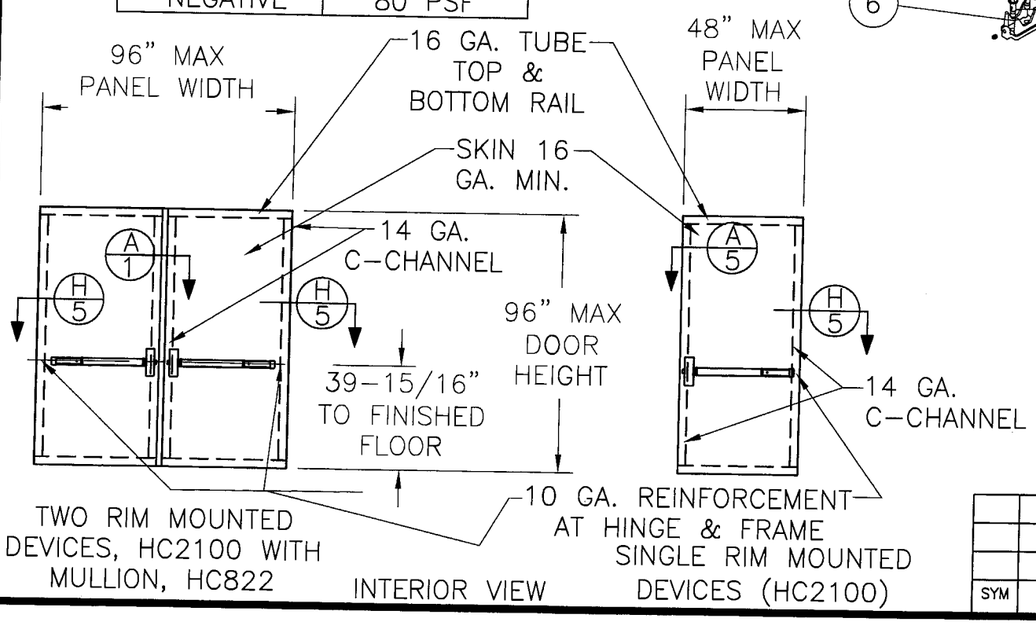

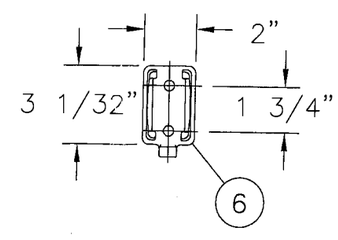

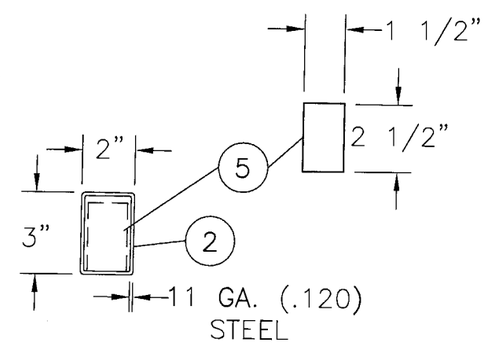

PRODUCT RENEWED
as complying with the Florida Building Code
Acceptance No 09-0218.09
Expiration Date SEP 30, 2014
By Ishwar I. Chand
Miami Dade Product Control Division

SYM	REVISION	DATE	BY

Robert J. Amoruso
Florida P. E. No. 49752
PTC, LLC
1535 N. Cogswell St., Suite C25
Rockledge, Florida 32955
FBPE Certificate of Authorization NO. 25935

STANLEY SECURITY SOLUTIONS
6161 E. 75TH ST. INDIANPOLIS, IN 46250

TITLE: HC2100 SERIES RIM DEVICES FOR SINGLE OR DOUBLE DOORS WITH HC822 HARDWARE

PREPARED BY: PTC
Phone 321.690.1788 Fax 321.690.1789

DRN: SMC	DATE: 02/03/09
SCALE: N.T.S.	DWG. NO: SSS0001
REV:	SHEET: 1 OF 6

SERIES HC2200 DOUBLE DOOR APPLICATION

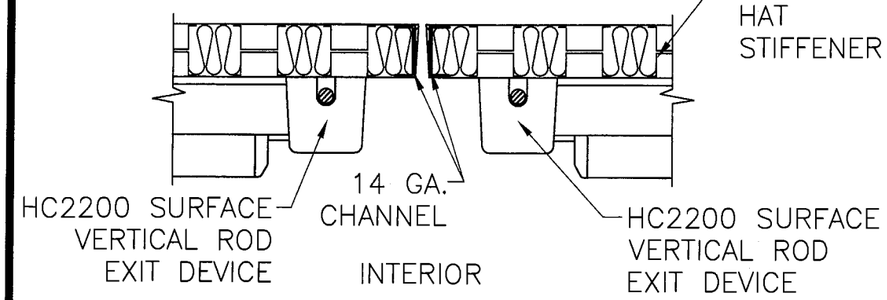

SECTION A/2

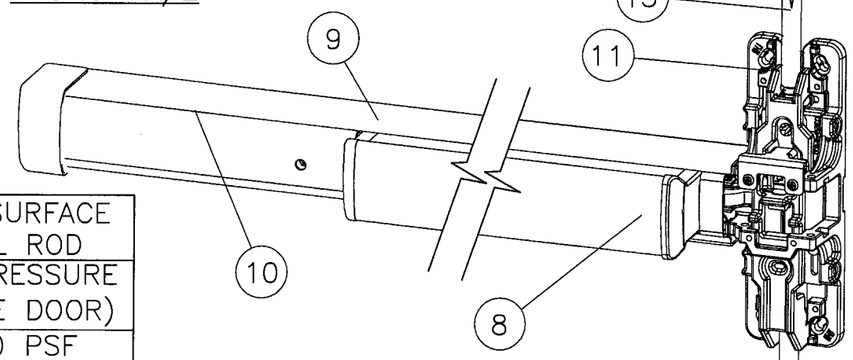

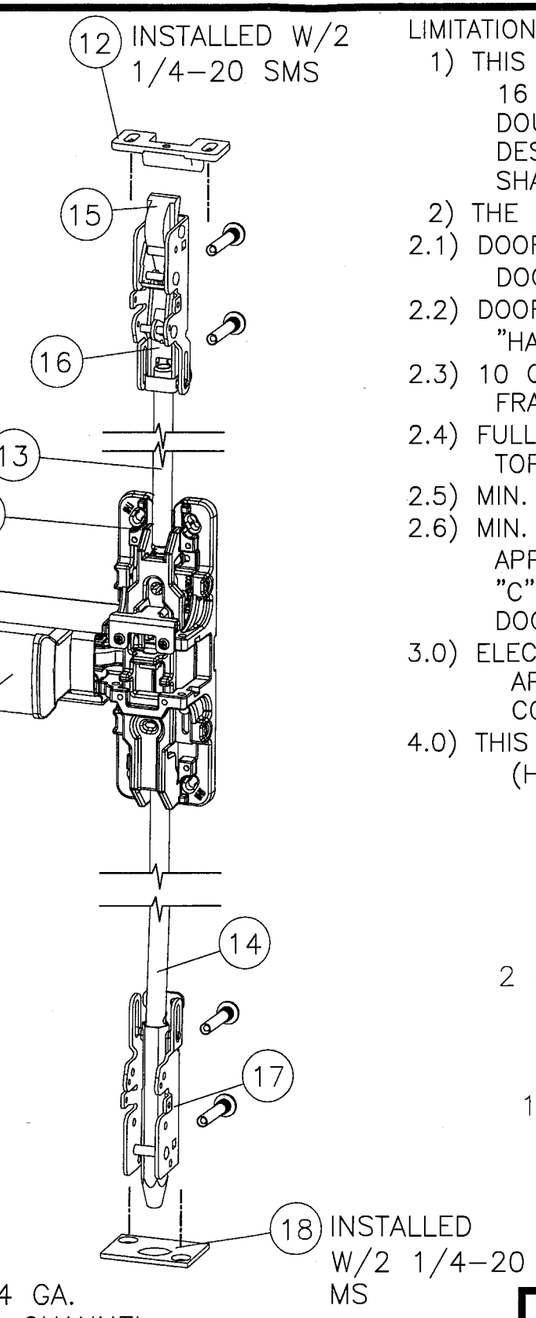

SERIES HC2200 SURFACE MOUNT VERTICAL ROD	
MAXIMUM DESIGN PRESSURE (SINGLE OR DOUBLE DOOR)	
POSITIVE	80 PSF
NEGATIVE	80 PSF

LIMITATIONS:

1) THIS DEVICE IS APPROVED TO BE EQUAL ALTERNATIVE TO BE USED IN 16 GA. STEEL FRAME & 16 GA. (.053" MIN.) STEEL SINGLE OR DOUBLE COMMERCIAL DOORS, HOLDING CURRENT NOA, THE LOWEST DESIGN PRESSURE RATING OF THE DOORS OR THE COMPONENT SHALL SHALL APPLY.

2) THE DOORS SHALL MEET FOLLOWING REQUIREMENTS:

2.1) DOOR SLAB MUST NOT BE WIDER THAN 48" & HIGHER THAN 96". THE DOOR SHALL BE 1-3/4" MIN. OVERALL THICKNESS.

2.2) DOOR SLAB TO BE REINFORCED WITH MIN. SIX (6) 22 GA. STEEL "HAT-STIFFNERS".

2.3) 10 GA. STEEL HINGE REINFORCEMENT AT HINGE STILE & AT THE FRAME.

2.4) FULL-LENGTH 16 GA. STEEL TUBE (2 X "C" NESTED CHANNELS) AT TOP & BOTTOM RAIL OF THE DOORS.

2.5) MIN. 12 GA. STEEL REINFORCEMENT AT STRIKE PLATE.

2.6) MIN. 14 GA. STEEL "C" CHANNEL AT LOCK STILE/HINGE STILE AS APPLICABLE. MIN. 12 GA. STEEL STILES FULL LENGTH TUBE (2 X "C" NESTED CHANNELS) AS APPLICABLE, PLEASE SEE CORRESPONDING DOOR DETAILS.

3.0) ELECTRICAL INSTALLATION IS NOT PART OF THIS APPROVAL & SUCH INSTALLATION MUST BE REVIEWED BY CORRESPONDING BUILDING AUTHORITY.

4.0) THIS PRODUCT COMPLIES WITH THE HIGH VELOCITY HURRICANE ZONE (HVHZ) OF THE 2004 AND 2007 FLORIDA BUILDING CODE (FBC).

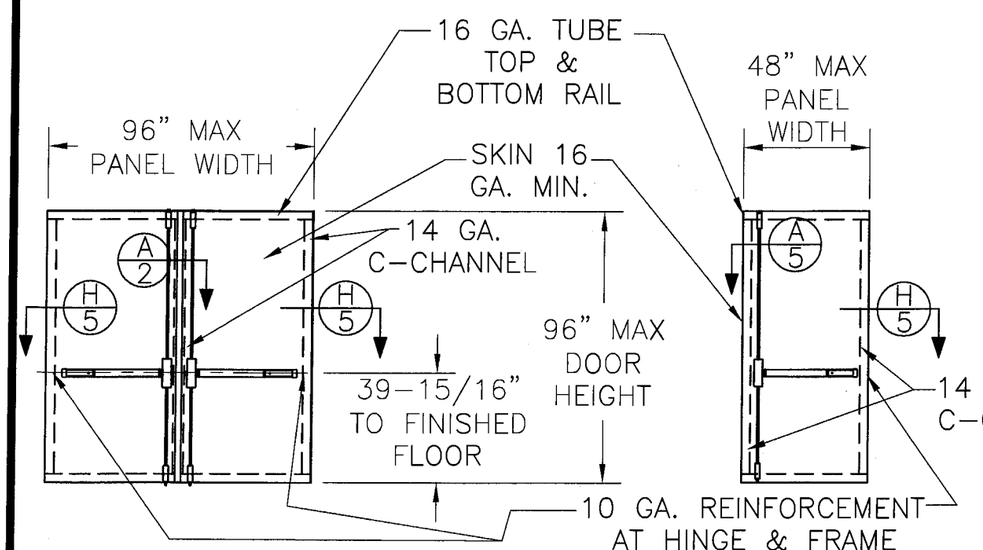

TWO SVR (HC2200) MOUNTED DEVICES

SINGLE SVR (HC2200) MOUNTED DEVICES

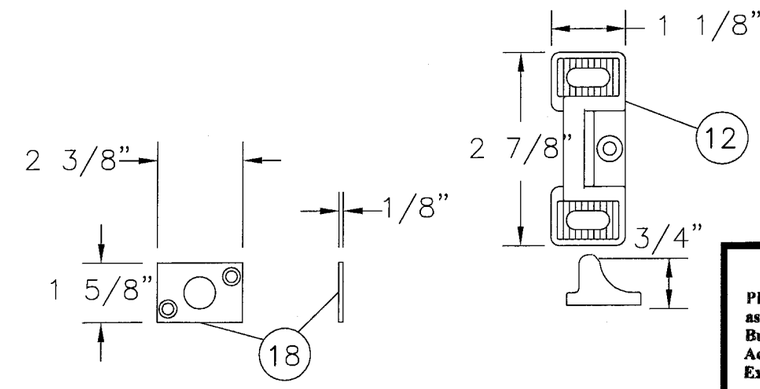

PRODUCT RENEWED
as complying with the Florida Buiding Code
Acceptance No. 09-0218.09
Expiration Date SEP 30, 2014
By Ishaq I. Chand
Miami-Dade Product Control Division

SYM	REVISION	DATE	BY

2/5/09

Robert J. Amoruso
Florida P. E. No. 49752
PTC, LLC
1535 N. Cogswell St., Suite C25
Rockledge, Florida 32955
FBPE Certificate of Authorization NO. 25935

STANLEY SECURITY SOLUTIONS
6161 E. 75TH ST. INDIANAPOLIS, IN 46250

TITLE: HC2200 SERIES SURFACE VERTICAL ROD DEVICES FOR SINGLE OR DOUBLE DOORS

PREPARED BY: PTC
Phone 321.690.1788 Fax 321.690.1789

DRN: SMC	DATE: 02/03/09
SCALE: N.T.S.	DWG. NO: SSS0001
REV:	SHEET: 2 OF 6

SERIES HC2800 DOUBLE DOOR APPLICATION

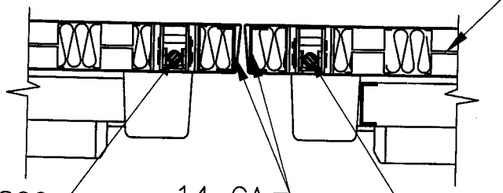

INTERIOR

SECTION A/3

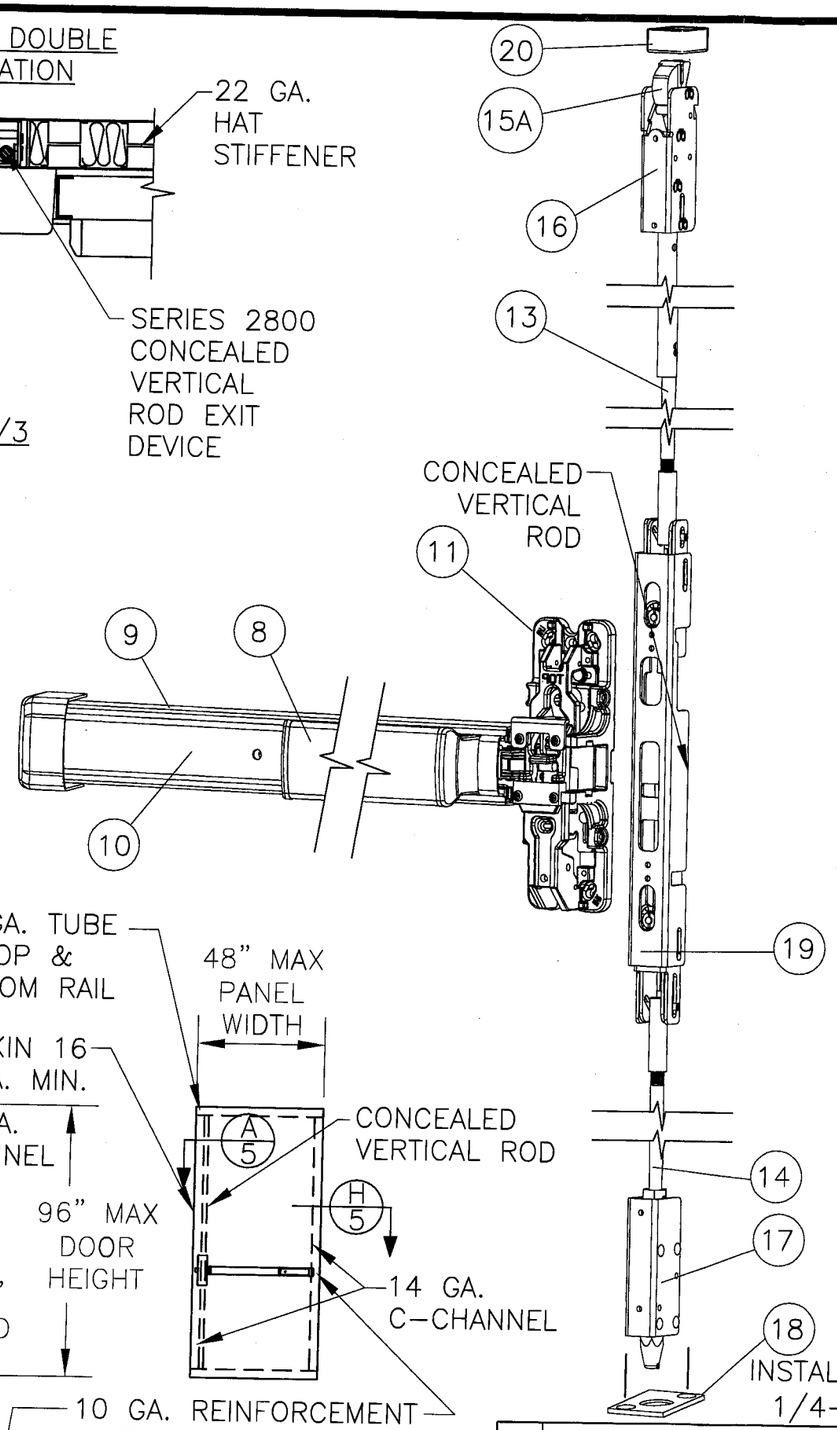

SERIES HC2800 CONCEALED VERTICAL ROD EXIT DEVICE	
MAXIMUM DESIGN PRESSURE (SINGLE OR DOUBLE DOOR)	
POSITIVE	80 PSF
NEGATIVE	80 PSF

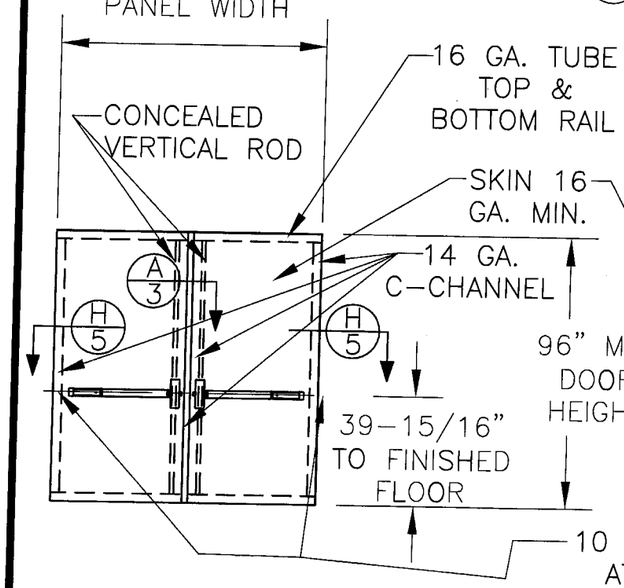

SERIES HC2800 TWO CVR MOUNTED DEVICES

SERIES HC2800 SINGLE CVR MOUNTED DEVICES

LIMITATIONS:

1) THIS DEVICE IS APPROVED TO BE EQUAL ALTERNATIVE TO BE USED IN 16 GA. STEEL & 16 GA. (.053" MIN.) STEEL SINGLE OR DOUBLE COMMERCIAL DOORS, HOLDING CURRENT NOA, THE LOWEST DESIGN PRESSURE RATING OF THE DOORS OR THE COMPONENT SHALL APPLY.

2) THE DOORS SHALL MEET FOLLOWING REQUIREMENTS:

2.1) DOOR SLAB MUST NOT BE WIDER THAN 48" & HIGHER THAN 96". THE DOOR SHALL BE 1-3/4" MIN. OVERALL THICKNESS.

2.2) DOOR SLAB TO BE REINFORCED WITH MIN. SIX (6) 22 GA. STEEL "HAT-STIFFNERS".

2.3) 10 GA. STEEL HINGE REINFORCEMENT AT HINGE STILE & AT THE FRAME.

2.4) FULL-LENGTH 16 GA. STEEL TUBE (2 X "C" NESTED CHANNELS) AT TOP & BOTTOM RAIL OF THE DOORS.

2.5) MIN. 12 GA. STEEL REINFORCEMENT AT STRIKE PLATE.

2.6) MIN. 14 GA. STEEL "C" CHANNEL AT LOCK STILE/HINGE STILE AS APPLICABLE. MIN. 12 GA. STEEL STILES FULL LENGTH TUBE (2 X "C" NESTED CHANNELS) AS APPLICABLE, PLEASE SEE CORRESPONDING DOOR DETAILS.

3.0) ELECTRICAL INSTALLATION IS NOT PART OF THIS APPROVAL & SUCH INSTALLATION MUST BE REVIEWED BY CORRESPONDING BUILDING AUTHORITY.

4.0) THIS PRODUCT COMPLIES WITH THE HIGH VELOCITY HURRICANE ZONE (HVHZ) OF THE 2004 AND 2007 FLORIDA BUILDING CODE.

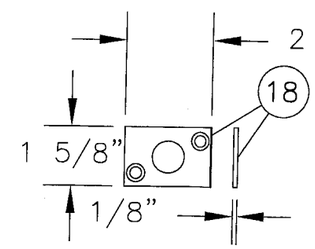

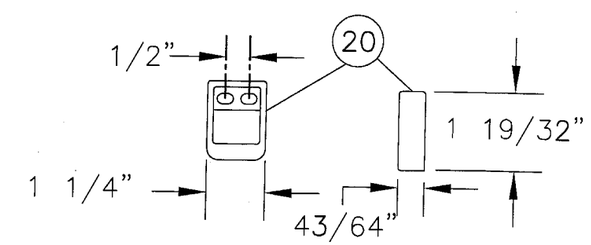

PRODUCT RENEWED
as complying with the Florida Buiding Code
Acceptance No 09-0218.09
Expiration Date Sep 30, 2014
By Ishwar V. Chand
Miami Dade Product Control Division

SYM	REVISION	DATE	BY

2/5/09

Robert J. Amoruso
Florida P. E. No. 49752
PTC, LLC
1535 N. Cogswell St., Suite C25
Rockledge, Florida 32955
FBPE Certificate of Authorization NO. 25935

STANLEY SECURITY SOLUTIONS
6161 E. 75TH ST. INDIANAPOLIS, IN 46250

TITLE: HC2800 SERIES CONCEALED VERTICAL ROD DEVICES FOR SINGLE OR DOUBLE DOORS

PREPARED BY: PTC
Phone 321.690.1788 Fax 321.690.1789

DRN: SMC	DATE: 02/03/09
SCALE: N.T.S.	DWG. NO: SSS0001
REV:	SHEET: 3 OF 6

DOUBLE DOOR APPLICATION

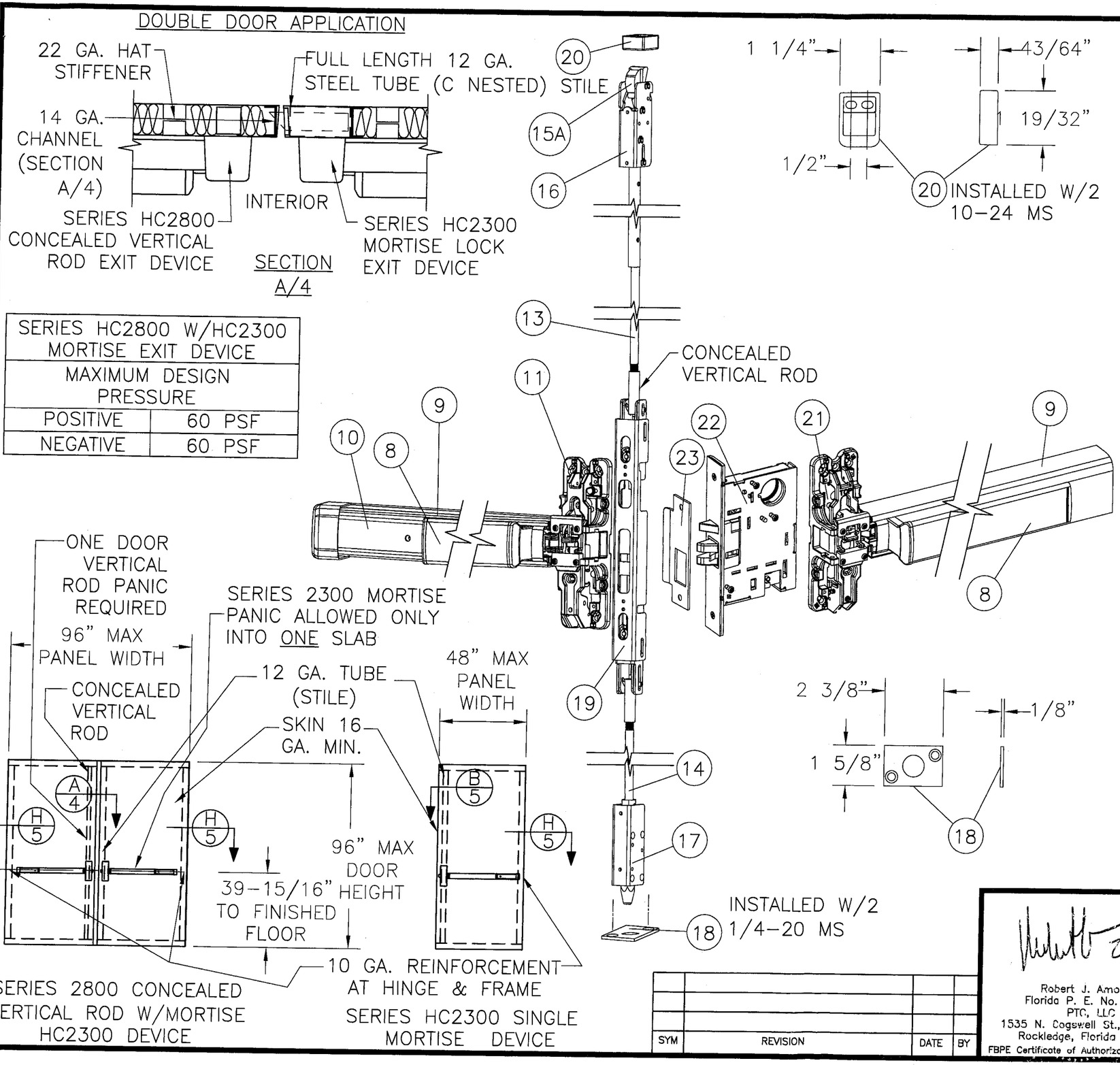

SERIES HC2800 W/HC2300 MORTISE EXIT DEVICE	
MAXIMUM DESIGN PRESSURE	
POSITIVE	60 PSF
NEGATIVE	60 PSF

LIMITATIONS:

1) THIS DEVICE IS APPROVED TO BE EQUAL ALTERNATIVE TO BE USED IN 16 GA. STEEL FRAME & 16 GA. (.053" MIN.) STEEL SINGLE OR DOUBLE COMMERCIAL DOORS, HOLDING CURRENT NOA, THE LOWEST DESIGN PRESSURE RATING OF THE DOORS OR THE COMPONENT SHALL APPLY.

2) THE DOORS SHALL MEET FOLLOWING REQUIREMENTS:

2.1) DOOR SLAB MUST NOT BE WIDER THAN 48" & HIGHER THAN 96". THE DOOR SHALL BE 1-3/4" MIN. OVERALL THICKNESS.

2.2) DOOR SLAB TO BE REINFORCED WITH MIN. SIX (6) 22 GA. STEEL "HAT-STIFFNERS".

2.3) 10 GA. STEEL HINGE REINFORCEMENT AT HINGE STILE & AT THE FRAME.

2.4) FULL-LENGTH 16 GA. STEEL TUBE (2 X "C" NESTED CHANNELS) AT TOP & BOTTOM RAIL OF THE DOORS.

2.5) MIN. 12 GA. STEEL REINFORCEMENT AT STRIKE PLATE.

2.6) MIN. 14 GA. STEEL "C" CHANNEL AT LOCK STILE/HINGE STILE AS APPLICABLE. MIN. 12 GA. STEEL STILES FULL LENGTH TUBE (2 X "C" NESTED CHANNELS) AS APPLICABLE, PLEASE SEE CORRESPONDING DOOR DETAILS.

3.0) ELECTRICAL INSTALLATION IS NOT PART OF THIS APPROVAL & SUCH INSTALLATION MUST BE REVIEWED BY CORRESPONDING BUILDING AUTHORITY.

4.0) THIS PRODUCT COMPLIES WITH THE HIGH VELOCITY HURRICANE ZONE (HVHZ OF THE 2004 AND 2007 FLORIDA BUILDING CODE.

PRODUCT RENEWED
as complying with the Florida Buiding Code
Acceptance No 09-0218.09
Expiration Date SEP 30, 2014
By Ishwar L. Chand
Miami Dade Product Control Division

SYM	REVISION	DATE	BY

2/5/09

Robert J. Amoruso
Florida P. E. No. 49752
PTC, LLC
1535 N. Cogswell St., Suite C25
Rockledge, Florida 32955
FBPE Certificate of Authorization NO. 25935

STANLEY SECURITY SOLUTIONS
6161 E. 75TH ST. INDIANAPOLIS, IN 46250

TITLE: HC2300 & HC2800 SERIES CONCEALED VERT. DEVICES MORTISE SINGLE OR DOUBLE DOORS

PREPARED BY: PTC
Phone 321.690.1788 Fax 321.690.1789

DRN: SMC	DATE: 02/03/09
SCALE: N.T.S.	DWG. NO: SSS0001
REV:	SHEET: 4 OF 6

SERIES HC2100, HC2200, HC2300 & HC2800 DEVICES					
ITEM NO.	QTY.	DESCRIPTION	PART NO.	SERIES	DRAWING NO.
1	1	3/4 THROW DEADLOCKING LATCHBOLT		HC2100	1
2	1	HC822 STEEL MULLIONS (ASTM-A500 STEEL GRADE B OR HIGHER STRENGTH MATERIAL) W/(4) 1/4-20 SS FLAT HEAD SCREWS		HC2100	1
3	1	822 MULLION CAP W/(1) 1/4-20 SET SCREW & (4) 1/4-20 MACHINE SCREWS		HC2100	1
4	1	HCKR822 MULLION CAP W/(4) 1/4-20 MACHINE SCREWS		HC2100	1
5	1	STEEL MULLION REINFORCEMENT (1018 COLD DRAWN - 2 1/2" X 1 1/2" BAR STOCK)		HC822	1
6	1	MULLION SILL BASE W/(2) 3/8 X 2 1/4" HILTI KWIK BOLT II EXPANSION ANCHORS W/1 5/8" EMB. INTO CONCRETE & (1) 1/4-20 SET SCREW		HC822	1
7	1	INTERLOCKING ANGLE W/(1) 1/4-20 & (1) #10-24 MACHINE SCREWS	S216	HC2100	1
8	1	TOUCHBAR ASSEMBLY		HC2100, HC2200 HC2300, HC2800	1, 2 3 & 4
9	1	DEVICE CHANNEL		HC2100, HC2200 HC2300, HC2800	1, 2 3 & 4
10	1	HINGE FILLER		HC2100, HC2200 HC2300, HC2800	1, 2 3 & 4
11	1	ACTIVE CASE W/(4) #10-24 MACHINE SCREWS		HC2100, HC2200 HC2300, HC2800	1, 2 3 & 4
12	1	STRIKE W/(2) 1/4-20 & (1) 10-24 MACHINE SCREW	S300	HC2100, HC2200	1 & 2
13	1	TOP ROD		HC2200 & HC2800	2, 3 &4
14	1	BOTTOM ROD		HC2200 & HC2800	2, 3 & 4
15	1	DEADLOCKING LATCHBOLT W/(2) 1/4-20 MACHINE SCREWS & SEX BOLTS		HC2200	2 & 4
15A	1	DEADLOCKING LATCHBOLT W/(2) 10-24 MACHINE SCREWS		HC2800	3
16	1	TOP LATCH ASSEMBLY		HC2200 & HC2800	2, 3 & 4
17	1	BOTTOM BOLT ASSEMBLY		HC2200 & HC2800	2, 3 & 4
18	1	BOTTOM STRIKE W/(2) 3/8 X 2 1/4" STUD ANCHORS	S460	HC2200 & HC2800	2, 3 & 4
19	1	CENTER CHASSIS		HC2800	3 & 4
20	1	TOP STRIKE W/(2) #10-24 MACHINE SCREWS	S519	HC2800	3 & 4
21	1	MORTISE ACTIVE CASE W/(4) #10-24 MACHINE SCREWS (SINGLE DOOR ONLY)		HC2300	4

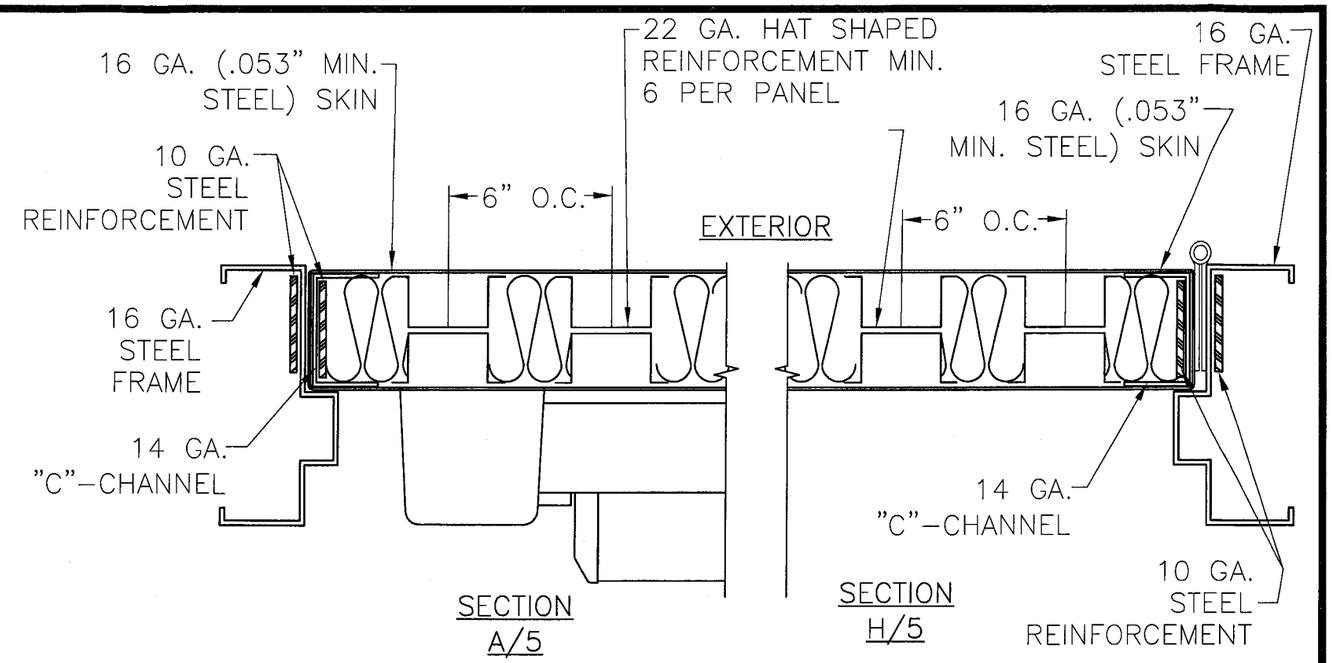

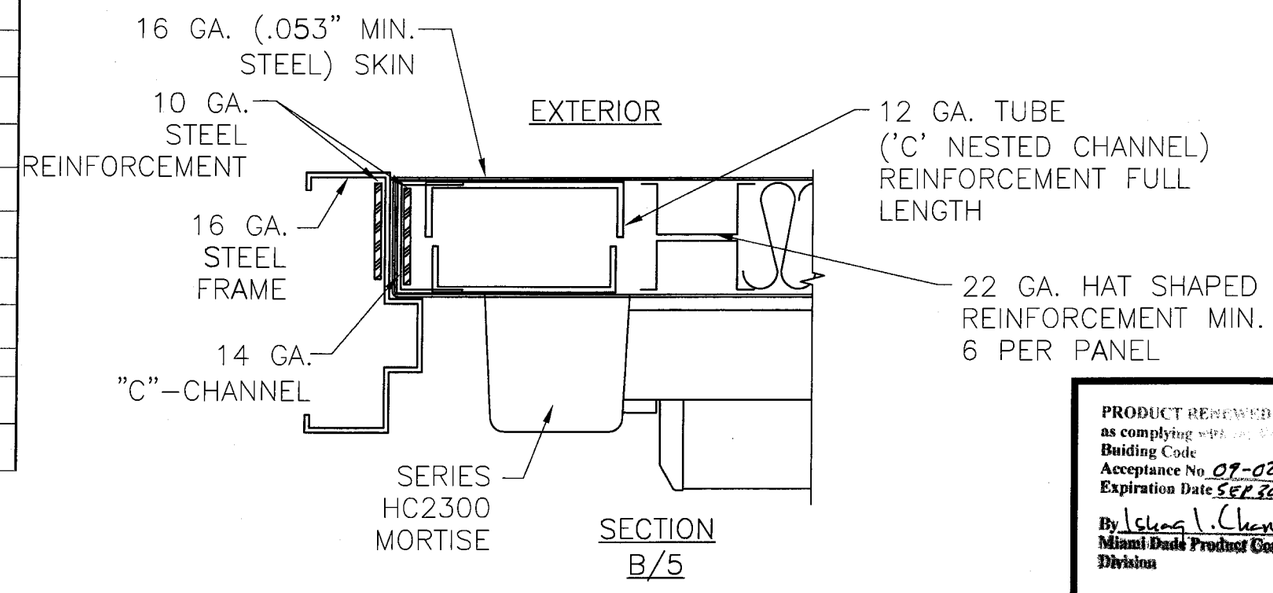

PRODUCT RENEWED
as complying with the Florida
Buiding Code
Acceptance No. 09-0218.09
Expiration Date SEP. 30, 2014
By Ishaq I. Chanda
Miami Dade Product Control
Division

SYM	REVISION	DATE	BY

2/5/09

Robert J. Amoruso
Florida P. E. No. 49752
PTC, LLC
1535 N. Cogswell St., Suite C25
Rockledge, Florida 32955
FBPE Certificate of Authorization NO. 25935

STANLEY SECURITY SOLUTIONS
6161 E. 75TH ST. INDIANAPOLIS, IN 46250

TITLE: BILL OF MATERIALS AND SECTION DETAILS

PREPARED BY: PTC
Phone 321.690.1788 Fax 321.690.1789

DRN: SMC	DATE: 02/03/09
SCALE: N.T.S.	DWG. NO: SSS0001
REV:	SHEET: 5 OF 6

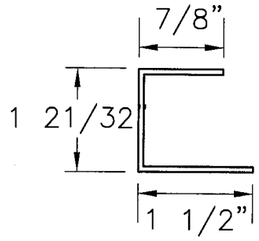

14 GA.
"C"–CHANNEL

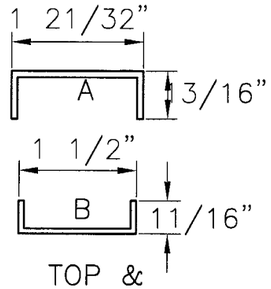

TOP &
BOTTOM
RAIL TUBE

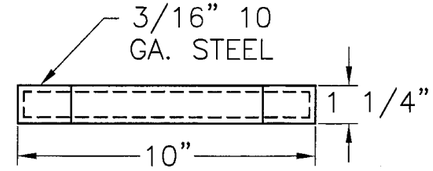

HINGE/FRAME
REINFORCEMENT

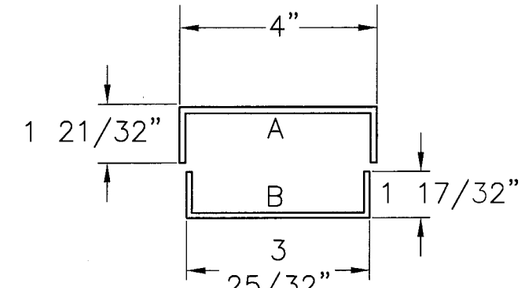

12 GA. (TUBE)
STILE
REINFORCEMENT

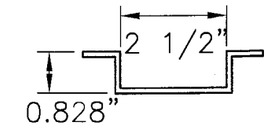

22 GA. STEEL
HAT STIFFENER

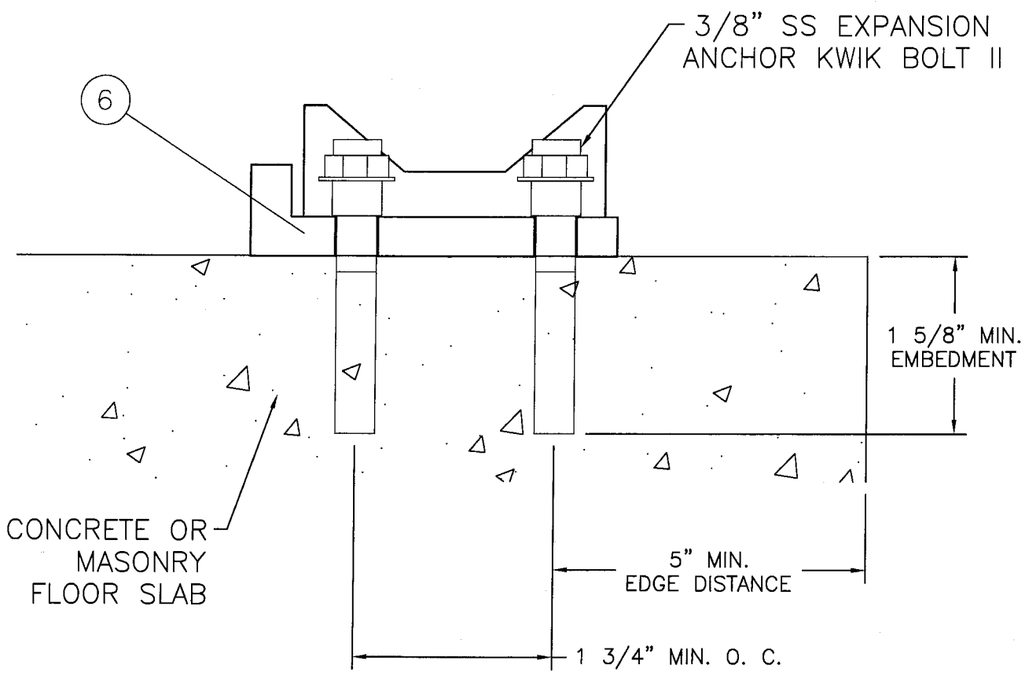

OUTSIDE TRIMS

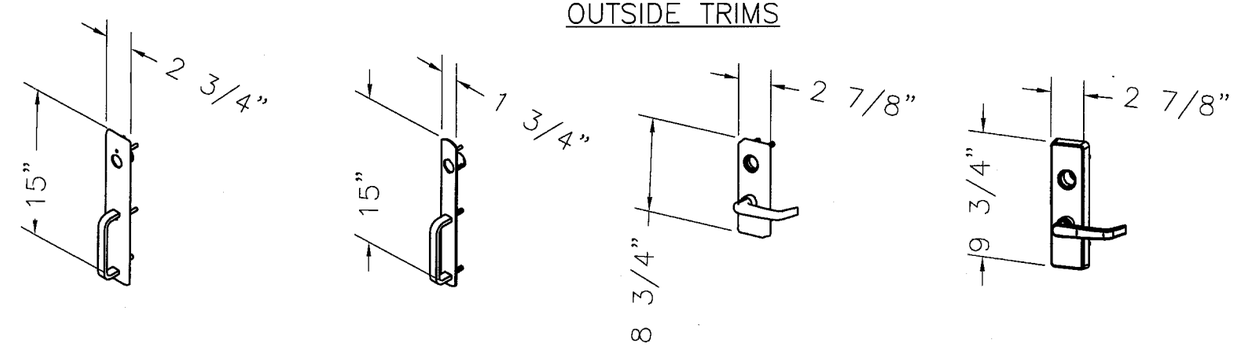

OPTIONAL OUTSIDE TRIMS (SEE CATALOG FOR FINISHES,
PART NUMBERS AND DESCRIPTIONS)

PRODUCT RENEWED
as complying with the Florida Building Code
Acceptance No 09-0218.09
Expiration Date SEP 30, 2014
By Ishaq I. Chaus
Miami Dade Product Control Division

1) ALL TRIMS THRU BOLT WITH #10–24 MACHINE SCREWS.
2) 1700 & 2000 SERIES TRIMS AVAILABLE WITH A, B & C STYLE PULLS.
3) 3900 & 4900 SERIES TRIMS AVAILABLE WITH A, B, C, & D LEVERS AND KNOBS.
4) CONFORMS TO UL10C AND UBC7–2, BHMA CERTIFIED FOR ANSI 156.3 GRADE 1.

SYM	REVISION	DATE	BY

2/5/09

Robert J. Arnoruso
Florida P. E. No. 49752
PTC, LLC
1535 N. Cogswell St., Suite C25
Rockledge, Florida 32955
FBPE Certificate of Authorization NO. 25935

STANLEY SECURITY SOLUTIONS
6161 E. 75TH ST. INDIANAPOLIS, IN 46250

TITLE: COMPONENTS CROSS SECTION AND TRIM OPTIONS

PREPARED BY: PTC
Phone 321.690.1788 Fax 321.690.1789

DRN: SMC	DATE: 02/03/09
SCALE: N.T.S.	DWG. NO: SSS0001
REV:	SHEET: 6 OF 6