MIAMI-DADE COUNTY
BUILDING CODE COMPLIANCE OFFICE (BCCO)
PRODUCT CONTROL DIVISION

MIAMI-DADE COUNTY, FLORIDA
METRO-DADE FLAGLER BUILDING

140 WEST FLAGLER STREET, SUITE 1603
MIAMI, FLORIDA 33130-1563
(305) 375-2901 FAX (305) 375-2908
www.miamidade.gov

NOTICE OF ACCEPTANCE (NOA)

Rolladen, Inc.
550 Ansin Boulevard
Hallandale, Florida 33009

SCOPE:
This NOA is being issued under the applicable rules and regulations governing the use of construction materials. The documentation submitted has been reviewed by Miami-Dade County Product Control Division and accepted by the Board of Rules and Appeals (BORA) to be used in Miami Dade County and other areas where allowed by the Authority Having Jurisdiction (AHJ).

This NOA shall not be valid after the expiration date stated below. The Miami-Dade County Product Control Division (In Miami Dade County) and/or the AHJ (in areas other than Miami Dade County) reserve the right to have this product or material tested for quality assurance purposes. If this product or material fails to perform in the accepted manner, the manufacturer will incur the expense of such testing and the AHJ may immediately revoke, modify, or suspend the use of such product or material within their jurisdiction. BORA reserves the right to revoke this acceptance, if it is determined by Miami-Dade County Product Control Division that this product or material fails to meet the requirements of the applicable building code.

This product is approved as described herein, and has been designed to comply with the High Velocity Hurricane Zone of the Florida Building Code.

DESCRIPTION: Extruded Aluminum Accordion Shutter

APPROVAL DOCUMENT: Drawing No. 96-19, titled " Accordion Shutter Details ", sheets 1 through 6 of 6, prepared by Al-Farooq Corporation, dated April 25, 1996, last revision #F dated November 10, 2005, signed and sealed by Humayoun Farooq, P.E., bearing the Miami-Dade County Product Control Renewal stamp with the Notice of Acceptance number and the expiration date by the Miami-Dade County Product Control Division.

MISSILE IMPACT RATING: Large and Small Missile Impact

LABELING: Each unit shall bear a permanent label with the manufacturer's name or logo, city, state and the following statement: "Miami-Dade County Product Control Approved", unless otherwise noted herein.

RENEWAL of this NOA shall be considered after a renewal application has been filed and there has been no change in the applicable building code negatively affecting the performance of this product.

TERMINATION of this NOA will occur after the expiration date or if there has been a revision or change in the materials, use, and/or manufacture of the product or process. Misuse of this NOA as an endorsement of any product, for sales, advertising or any other purposes shall automatically terminate this NOA. Failure to comply with any section of this NOA shall be cause for termination and removal of NOA.

ADVERTISEMENT: The NOA number preceded by the words Miami-Dade County, Florida, and followed by the expiration date may be displayed in advertising literature. If any portion of the NOA is displayed, then it shall be done in its entirety.

INSPECTION: A copy of this entire NOA shall be provided to the user by the manufacturer or its distributors and shall be available for inspection at the job site at the request of the Building Official.

This NOA **renews NOA # 08-0219.05** and consists of this page 1, evidence submitted pages E-1, E-2, E-3 & E-4 and approval document mentioned above.

The submitted documentation was reviewed by **Helmy A. Makar, P.E., M.S.**

MIAMI-DADE COUNTY APPROVED

Helmy A. Makar
04/08/2009

NOA No. 09-0224.05
Expiration Date: 02/27/2010
Approval Date: 04/08/2009

Rolladen, Inc.

NOTICE OF ACCEPTANCE: EVIDENCE SUBMITTED

1. EVIDENCE SUBMITTED UNDER PREVIOUS APPROVAL #96-0621.01

A. DRAWINGS

1. *Drawing No. 96-19, "Rolladen, Inc.", Sheets 1 thru 5 of 5, dated 11/25/96, latest revision No. C, dated 01/30/97, prepared by Al-Farooq Corporation, signed and sealed by Humayoun Farooq, P.E.*

B. TESTS

1. *Test report on: 1.) Uniform Static Air Pressure Test Loading, per PA 202-94 of extruded aluminum accordion shutter (120" span), prepared by Hurricane Engineering & Testing, Inc., Report No. HETI-96-535, dated 03/21/96, signed and sealed by Hector M. Medina, P.E..*
2. *Test report on: 1.) Large Missile Impact Test, per PA 201-94, and*
   2.) Cyclic Wind Pressure Test, per PA 203-94
   of extruded aluminum accordion shutter, prepared by Hurricane Engineering & Testing, Inc., Report No. HETI-96-537, dated 04/01/96, signed and sealed by Hector M. Medina, P.E.

C. CALCULATIONS

1. *Comparative Analysis and Anchor Analysis dated 06/11/96, 01/03/97 and 01/31/97 prepared by Al-Farooq Corporation, signed and sealed by Humayoun Farooq, P.E.*

D. MATERIAL CERTIFICATIONS

1. *Mill Certified Test Report issued by Benda Aluminum of Florida, with chemical composition for aluminum 6063-T6 alloy dated 03/15/96.*
2. *Tensile Test Report No. HETI-96-T17 Prepared by Hurricane Engineering & Testing, Inc., dated 04/11/96, signed and sealed by Hector M. Medina, P.E.*

2. EVIDENCE SUBMITTED UNDER PREVIOUS APPROVAL #00-0128.10

A. DRAWINGS

1. *None.*

B. TESTS

1. *None.*

C. CALCULATIONS

1. *None.*

D. MATERIAL CERTIFICATIONS

1. *None.*

Helmy A. Makar, P.E., M.S.
Product Control Examiner
NOA No. 09-0224.05
Expiration Date: 02/27/2010
Approval Date: 04/08/2009

NOTICE OF ACCEPTANCE: EVIDENCE SUBMITTED

F. OTHERS

1. *Letter from Rolladen, Inc., dated 01/20/2000, signed by Mr. Terry D. Low, stating that the product approval #96-0621.01 has not changed.*
2. *Letter from Al-Farooq Corporation, dated 01/20/2000, signed and sealed by H. Farooq, P.E., stating that he is still in the engineering business.*

3. EVIDENCE SUBMITTED UNDER PREVIOUS APPROVAL #00-0411.07

A. DRAWINGS

1. *Drawing No. 96-19, titled "Accordion Shutter Details", Sheets 1 through 5 of 5, dated April 25, 1996, latest revision No. E, dated August 1, 2000, prepared by Al-Farooq Corporation, signed and sealed by Humayoun Farooq, P.E.*

B. TESTS

1. *Test report on Large Missile Impact Test, per PA 201-94, and Cyclic Wind Pressure Test, per PA 203-94 of extruded aluminum accordion shutter, prepared by Hurricane Engineering & Testing, Inc., Report No. HETI-00-864, dated 01/05/2000, signed and sealed by Hector M. Medina, P.E.*

C. CALCULATIONS

1. *Anchor Analysis, 14 sheets, dated 01/19/2000, prepared by Al-Farooq Corporation, signed and sealed by Humayoun Farooq, P.E.*

D. MATERIAL CERTIFICATIONS

1. *Mill Certified Test Report issued by Benda Aluminum of Florida, with chemical composition for aluminum 6063-T6 alloy dated 12/20/99.*

4. EVIDENCE SUBMITTED UNDER PREVIOUS APPROVAL # 03-0123.07

A. DRAWINGS

1. *Drawing No. 96-19, titled "Accordion Shutter Details", Sheets 1 through 5 of 5, dated April 25, 1996, latest revision No. E, dated August 1, 2000, prepared by Al-Farooq Corporation, signed and sealed by Humayoun Farooq, P.E. on February 17, 2003.*

B. TESTS

1. *None.*

C. CALCULATIONS

1. *None.*

D. MATERIAL CERTIFICATIONS

1. *None.*

Helmy A. Makar, P.E., M.S.
Product Control Examiner
NOA No. 09-0224.05
Expiration Date: 02/27/2010
Approval Date: 04/08/2009

NOTICE OF ACCEPTANCE: EVIDENCE SUBMITTED

5. EVIDENCE SUBMITTED UNDER PREVIOUS APPROVAL # 06-0213.03

A. DRAWINGS:

1. *Drawing No. 96-19, titled " Accordion Shutter Details ", sheets 1 through 6 of 6, prepared by Al-Farooq Corporation, dated April 25, 1996, last revision #F dated November 10, 2005, signed and sealed by Humayoun Farooq, P.E.*

B. TESTS:

1. *None.*

C. CALCULATIONS:

1. *Anchor analysis, 77 pages, dated January 31, 2006, prepared by Al-Farooq Corp., signed and sealed by Humayoun Farooq, P.E.*

D. QUALITY ASSURANCE

1. *By Miami-Dade County Building Code Compliance Office.*

E. MATERIAL CERTIFICATION:

1. *None.*

6. EVIDENCE SUBMITTED UNDER PREVIOUS APPROVAL # 08-0219.05

A. DRAWINGS:

1. *None.*

B. TESTS:

1. *None.*

C. CALCULATIONS:

1. *None.*

D. QUALITY ASSURANCE

1. *By Miami-Dade County Building Code Compliance Office.*

E. MATERIAL CERTIFICATION:

1. *None.*

Hemy A. Makar, P.E., M.S.
Product Control Examiner
NOA No. 09-0224.05
Expiration Date: 02/27/2010
Approval Date: 04/08/2009

NOTICE OF ACCEPTANCE: EVIDENCE SUBMITTED

7. NEW EVIDENCE SUBMITTED

A. DRAWINGS:

1. None.

B. TESTS:

1. None.

C. CALCULATIONS:

1. None.

D. QUALITY ASSURANCE

1. By Miami-Dade County Building Code Compliance Office.

E. MATERIAL CERTIFICATION:

1. None.

Helmy A. Makar, P.E., M.S.
Product Control Examiner
NOA No. 09-0224.05
Expiration Date: 02/27/2010
Approval Date: 04/08/2009

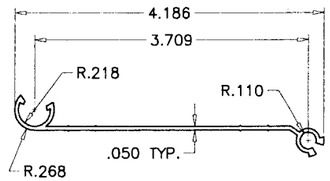

BLADE '5905'
6063–T6

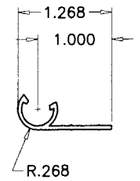

END SLAT
6063–T6

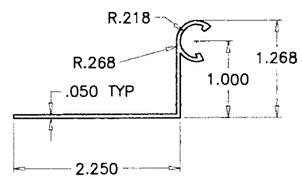

90° END SLAT
6063–T6

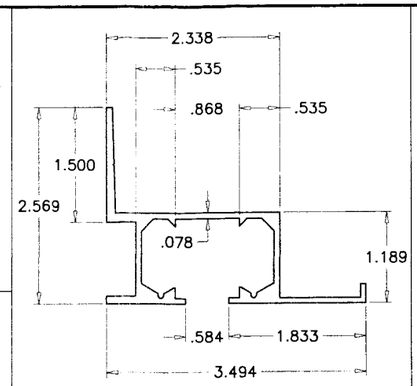

WALL MOUNT TRACK
6063–T6

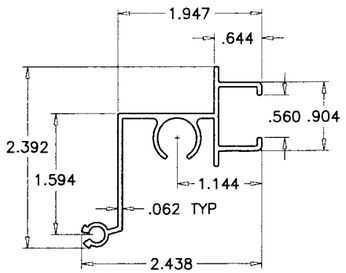

MALE LOCK SLAT '5904'
6063–T6

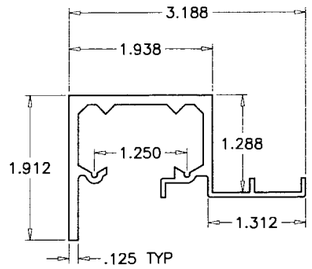

H.D. HEADER
6063–T6

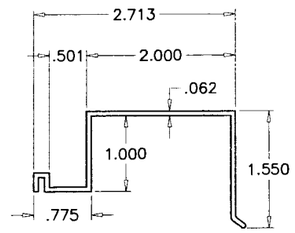

RAIN–GUARD
6063–T6

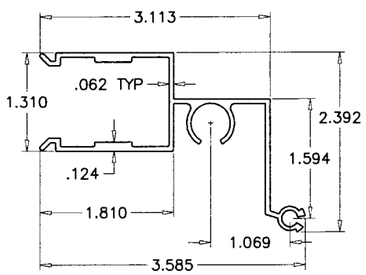

FEMALE LOCK SLAT '5903'
6063–T6

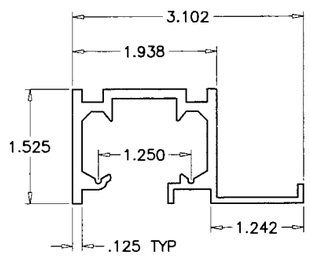

ALT. HEADER
6063–T6

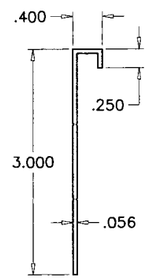

BOTTOM GUTTER
6063–T6

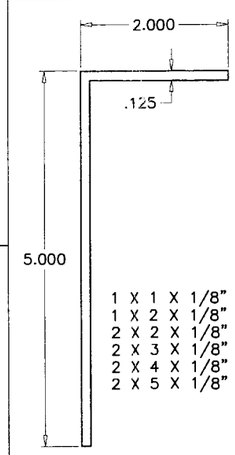

ALIMINUM ANGLES
6063–T6

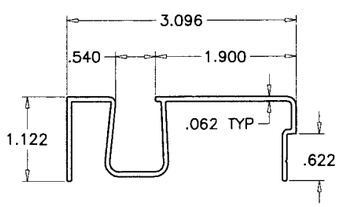

ALT. SILL
6063–T6

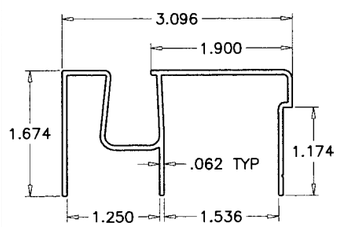

SILL
6063–T6

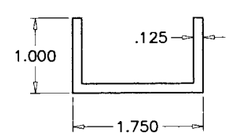

FLOOR SHOE
6063–T6

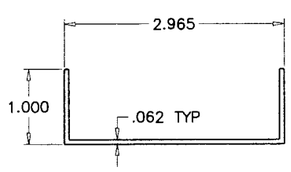

ALT. SILL ADAPTER
6063–T6

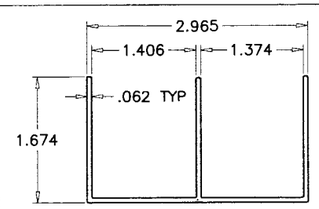

SILL ADAPTER
6063–T6

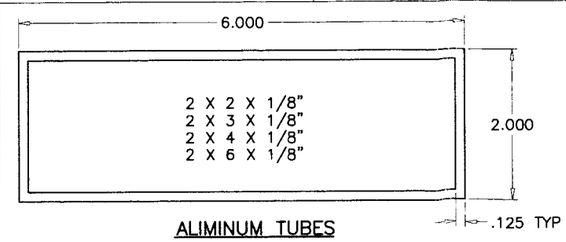

ALIMINUM TUBES
6063–T6

GENERAL NOTES

1. THIS PRODUCT HAS BEEN DESIGNED AND TESTED TO COMPLY WITH THE REQUIREMENTS OF THE FLORIDA BUILDING CODE 2004 EDITION INCLUDING HIGH VELOCITY HURRICANE ZONE.
2. DESIGN CRITERIA FOR ALUMINUM, MINIMUM MECHANICAL PROPERTIES, AND SAFETY FACTORS ARE IN ACCORDANCE WITH THE "ALUMINUM CONSTRUCTION MANUAL" LATEST EDITION.
3. ALUMINUM ALLOYS: ALL EXTRUSIONS SHALL BE ALLOY AS SHOWN .
4. STEEL SURFACES TO BE PLACED IN CONTACT WITH ALUMINUM SHALL BE GIVEN ONE COAT OF ZINC CHROMATE PRIMER IN ACCORDANCE WITH FEDERAL SPEC. NO. TTP–645, OR BE GALVANIZED.
5. ANCHORS SHALL BE AS SHOWN ON DETAILS. ANCHOR EMBEDMENT TO BASE MATERIAL SHALL BE BEYOND WALL DRESSING OR STUCCO.
6. ALL BOLTS SHALL BE STAINLESS STEEL, ALUMINUM ALLOY 2024–T4 OR 7075–T6, OR PLATED STEEL. WING NUTS TO BE OF ZINC ALLOY.
7. DESIGN CRITERIA FOR SLATS: MAX DEFLECTION $\leq$ L/30 OR 2".
8. ANCHORING OR LOADING CONDITIONS OTHER THAN THOSE SHOWN IN THESE DETAILS ARE NOT PART OF THIS APPROVAL. .
9. A LOAD DURATION INCREASE IN ALLOWABLE STRESS IS USED IN DESIGN OF WOOD ANCHORS ONLY.

DESIGN LOADS SHALL BE CALCULATED AS PER REQUIREMENTS OF ASCE 7–02 AS REQUIRED BY BUILDING CODE.

DESIGN PRESSURE RATING = + 74 PSF
– 105 PSF

PRODUCT MARKING

A LABEL SHALL BE AFFIXED ON LOCKING MEMBER OF UNIT ABOVE LOCK WITH THE FOLLOWING STATEMENT.

ROLLADEN INC., MIAMI, FL.
'MIAMI DADE COUNTY PRODUCT CONTROL APPROVED'

PRODUCT RENEWED
as complying with the Florida Building Code
Acceptance No. 08-0219.05
Expiration Date 02/27/2009
By Helena A. Melo
Miami Dade Product Control Division

PRODUCT REVISED
as complying with the Florida Building Code
Acceptance No. 06-0213.03
Expiration Date 02/27/2008
By Helena A. Melo
Miami Dade Product Control Division

PRODUCT RENEWED
as complying with the Florida Building Code
Acceptance No. 09-0224.05
Expiration Date 02/27/2010
By Helena A. Melo
Miami Dade Product Control Division

Engr: DR. HUMAYOUN FAROOQ
STRUCTURES
FLA. PE # 16557
C.A.N. 3538

JUL 14 2006

AL–FAROOQ CORPORATION
ENGINEERS, PLANNERS & PRODUCT DESIGN
1235 SW 87 AVE
MIAMI, FLORIDA 33174
TEL. (305) 264–8100 FAX. (305) 262–6978
ACCORDION/96–19RNI

ACCORDION SHUTTER DETAILS

ROLLADEN INC.
550 ANSIN BLVD.
HALLANDALE, FL. 33009
TEL. (954) 757–8591 FAX. (954) 454–1577

revisions:

no	date	by	description
B	01.02.97	H	INS. MOUNT & CHART 5 REV.
C	01.30.97	H	ANCHOR CHARTS REV.
D	01.14.00	H	WALL TRACK ADDED
E	08.01.00	H	REV. PER BCCO COMMENTS
F	11.10.05	H	UPDATED FOR 2004 FBC

date: 04–25–96
scale: 1/2" = 1"
dr. by: HAMID
chk. by:

drawing no.
96–19

WALL MOUNTS

ANCHOR TYPE	CHART TO USE CONC.	BLOCK	WOOD	METAL
A	5	2	–	–
C	3	2	–	–
D	6	2	–	–
E	–	–	6	–
G	–	–	–	3

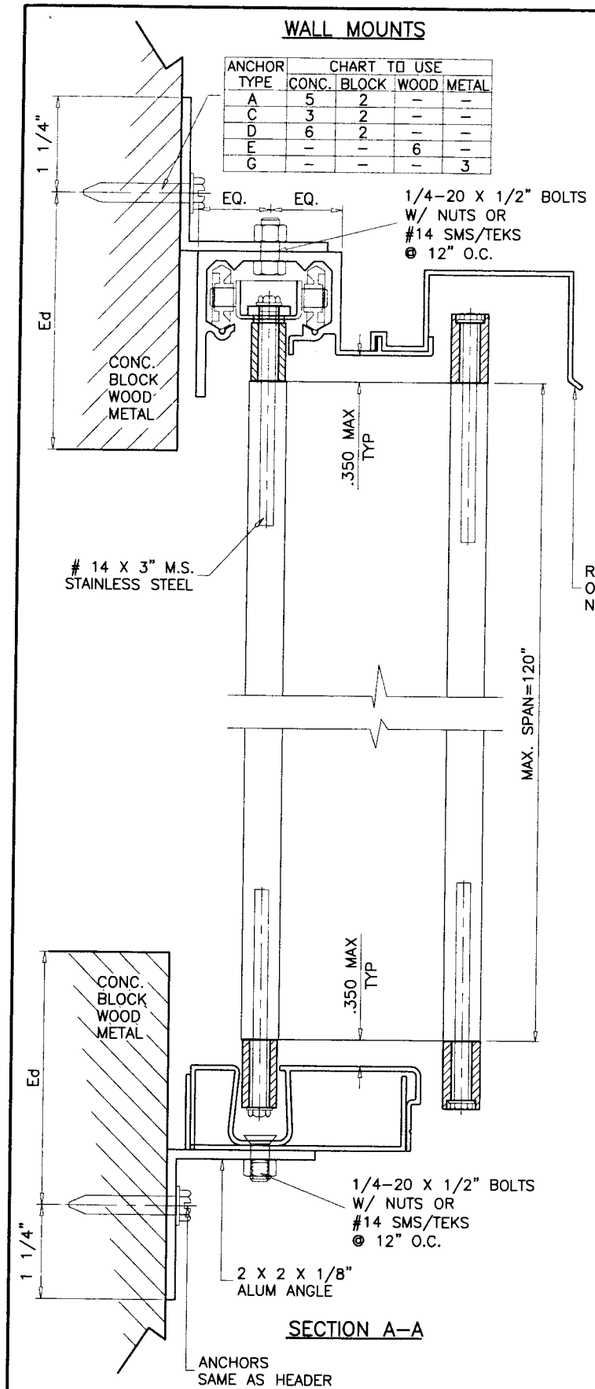

SECTION A-A

ALT. WALL MOUNTS

ANCHOR TYPE	CHART TO USE CONC.	BLOCK	WOOD	METAL
A	3	1	–	–
C	1	1	–	–
D	3	1	–	–
E	–	–	3	–
G	–	–	–	1

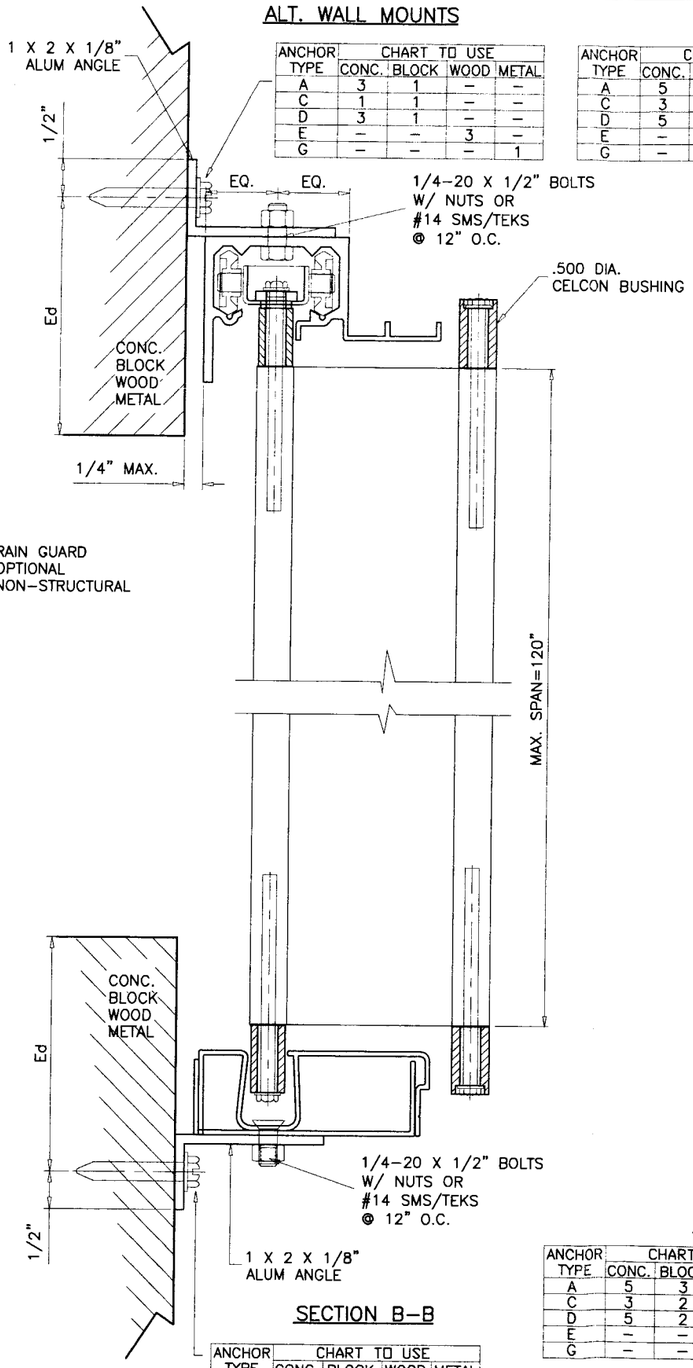

SECTION B-B

ANCHOR TYPE	CHART TO USE CONC.	BLOCK	WOOD	METAL
A	3	1	–	–
C	2	1	–	–
D	4	1	–	–
E	–	–	3	–
G	–	–	–	1

INSIDE MOUNTS

ANCHOR TYPE	CHART TO USE CONC.	BLOCK	WOOD	METAL
A	5	3	–	–
C	3	3	–	–
D	5	2	–	–
E	–	–	4	–
G	–	–	–	3

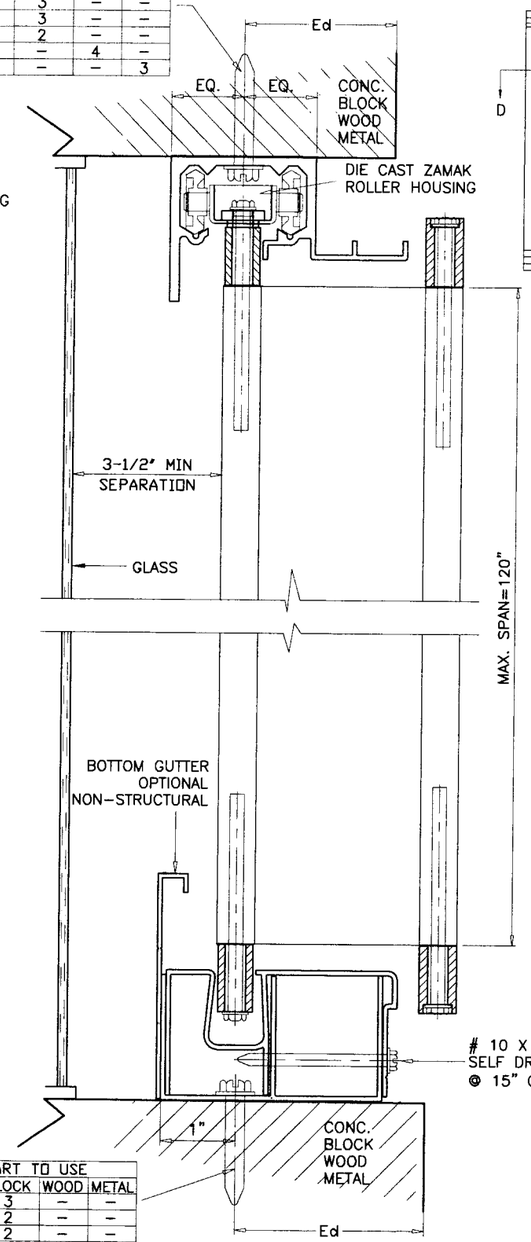

SECTION C-C

ANCHOR TYPE	CHART TO USE CONC.	BLOCK	WOOD	METAL
A	5	3	–	–
C	3	2	–	–
D	5	2	–	–
E	–	–	4	–
G	–	–	–	3

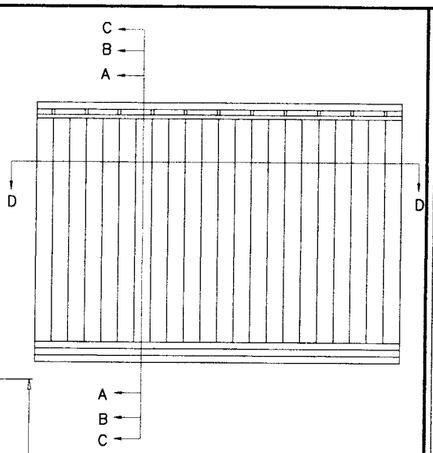

TYPICAL ELEVATION

PRODUCT RENEWED
as complying with the Florida
Building Code
Acceptance No. 08-0219.05
Expiration Date 02/27/2009
By Helena A. Melo
Miami Dade Product Control
Division

ALTERNATE HEADER CAN BE USED IN LIEU OF H.D. HEADER.

PRODUCT REVISED
as complying with the Florida
Building Code
Acceptance No. 06-0213.03
Expiration Date 02/27/2008
By Helena A. Melo
Miami Dade Product Control
Division

PRODUCT RENEWED
as complying with the Florida
Building Code
Acceptance No. 09-0224.05
Expiration Date 02/27/2010
By Helena A. Melo
Miami Dade Product Control
Division

FOR GENERAL NOTES AND EXTRUSION DETAILS SEE SHEET 1 OF 6.
FOR WOOD INSTALLATIONS SEE SHEET 5 OF 6.
FOR ANCHOR CHARTS SEE SHEET 6 OF 6.

Ed = TYPICAL EDGE DISTANCE
CONC. & BLOCK = 12d (12 ANCHOR DIAMETERS)
WOOD = 5d
FOR LESSER EDGE DISTANCES SEE SHEET 6 OF 6.

ANCHORS: EMBEDMENT & EDGE DISTANCES SHOWN ARE BEYOND THE WALL & FLOOR COVERING (STUCCO, TILES, ETC.)

HEADER AND SILL DETAILS CAN BE USED IN ANY COMBINATIONS.

Engr: DR. HUMAYOUN FAROOQ
STRUCTURES
FLA. PE # 16557
C.A.N. 3538

JUL 14 2006

AL-FAROOQ CORPORATION
ENGINEERS, PLANNERS & PRODUCT DESIGN
1235 SW 87 AVE
MIAMI, FLORIDA 33174
TEL. (305) 264-8100 FAX. (305) 262-6978

ACCORDION/96-19RNI

ACCORDION SHUTTER DETAILS

ROLLADEN INC.
550 ANSIN BLVD.
HALLANDALE, FL. 33009
TEL. (954) 757-8591 FAX. (954) 454-1577

revisions:

no	date	by	description

date: 04-25-96
scale: 1/2" = 1"
dr. by: HAMID
chk. by:

drawing no. 96-19

sheet 2 of 6

BUILT-OUT CONDITION

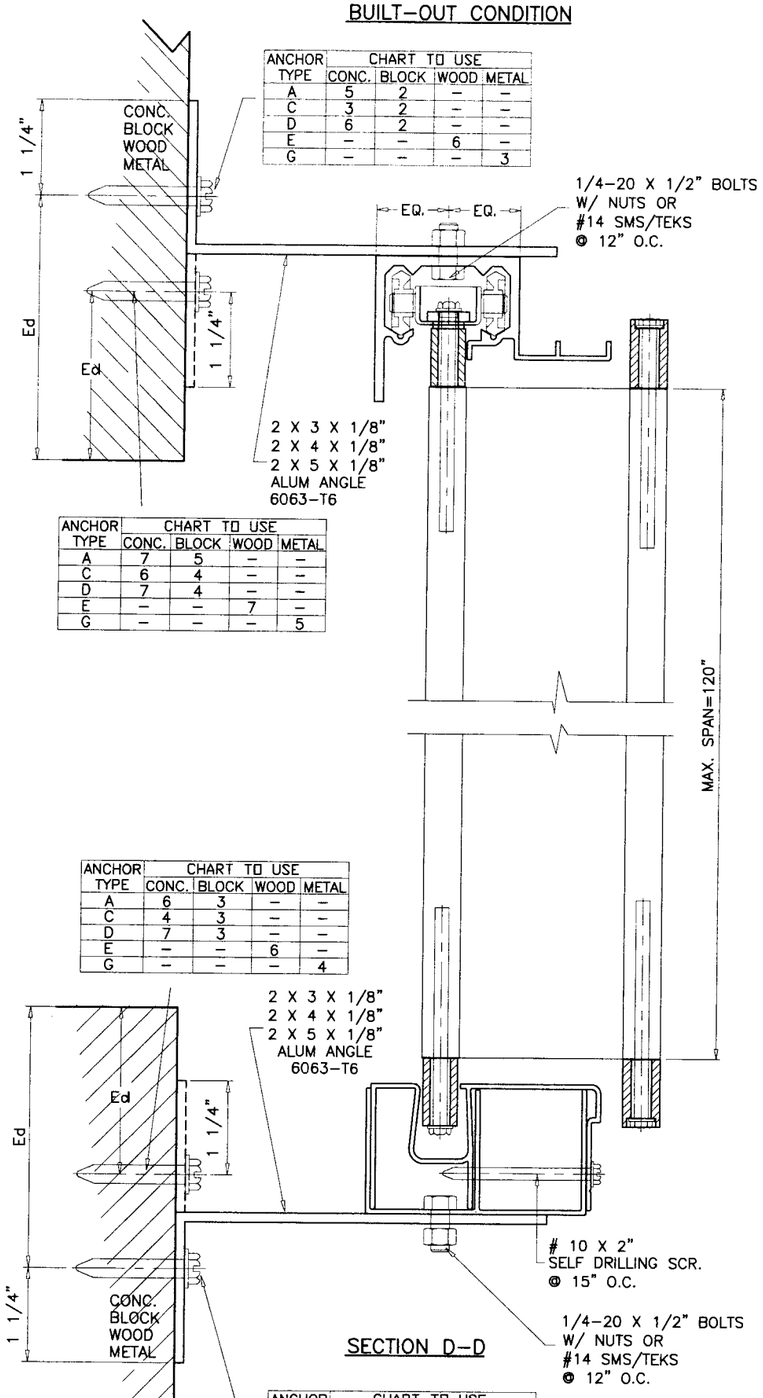

ANCHOR TYPE	CHART TO USE			
	CONC.	BLOCK	WOOD	METAL
A	5	2	–	–
C	3	2	–	–
D	6	2	–	–
E	–	–	6	–
G	–	–	–	3

ANCHOR TYPE	CHART TO USE			
	CONC.	BLOCK	WOOD	METAL
A	7	5	–	–
C	6	4	–	–
D	7	4	–	–
E	–	–	7	–
G	–	–	–	5

ANCHOR TYPE	CHART TO USE			
	CONC.	BLOCK	WOOD	METAL
A	6	3	–	–
C	4	3	–	–
D	7	3	–	–
E	–	–	6	–
G	–	–	–	4

SECTION D-D

ANCHOR TYPE	CHART TO USE			
	CONC.	BLOCK	WOOD	METAL
A	4	2	–	–
C	3	2	–	–
D	5	1	–	–
E	–	–	5	–
G	–	–	–	2

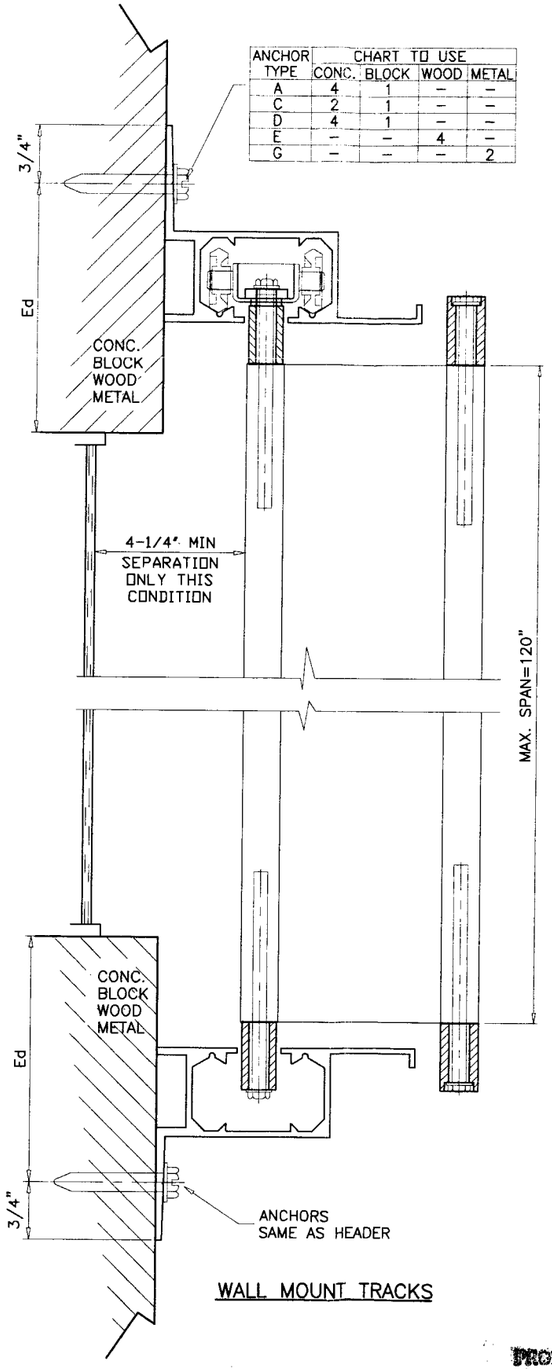

ANCHOR TYPE	CHART TO USE			
	CONC.	BLOCK	WOOD	METAL
A	4	1	–	–
C	2	1	–	–
D	4	1	–	–
E	–	–	4	–
G	–	–	–	2

WALL MOUNT TRACKS

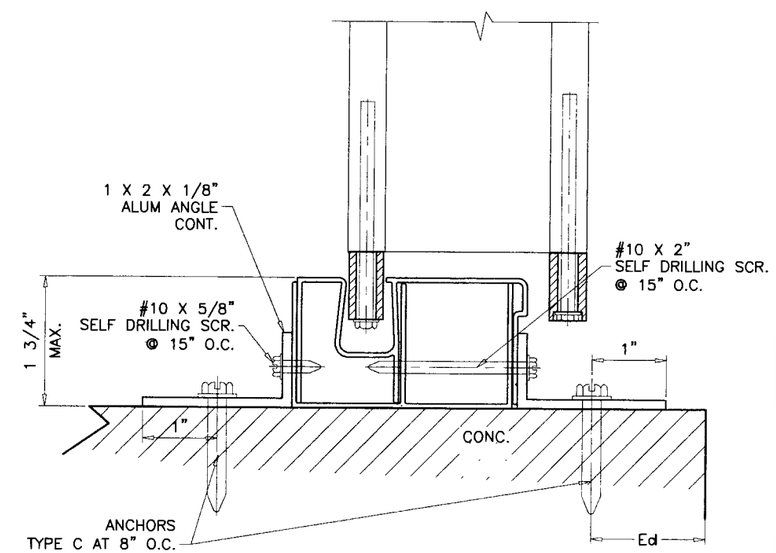

REMOVABLE SILL TRACK

PRODUCT RENEWED
as complying with the Florida
Building Code
Acceptance No. 09-0224.05
Expiration Date 02/27/2010
By
Miami Dade Product Control
Division

PRODUCT RENEWED
as complying with the Florida
Building Code
Acceptance No. 08-0219.05
Expiration Date 02/27/2009
By
Miami Dade Product Control
Division

Engr: DR. HUMAYOUN FAROOQ
STRUCTURES
FLA. PE # 16557
C.A.N. 3538

JUL 14 2006

PRODUCT REVISED
as complying with the Florida
Building Code
Acceptance No. 06-0213.03
Expiration Date 02/27/2008
By
Miami Dade Product Control
Division

AL-FAROOQ CORPORATION
ENGINEERS, PLANNERS & PRODUCT DESIGN
1235 SW 87 AVE
MIAMI, FLORIDA 33174
TEL. (305) 264-8100 FAX. (305) 262-6978

ACCORDION/96-19RNI

ACCORDION SHUTTER DETAILS

ROLLADEN INC.
550 ANSIN BLVD.
HALLANDALE, FL. 33009
TEL. (954) 757-8591 FAX. (954) 454-1577

revisions:

no	date	by	description

date: 04-25-96
scale: 1/2" = 1"
dr. by: HAMID
chk. by:

drawing no.
96-19

sheet 3 of 6

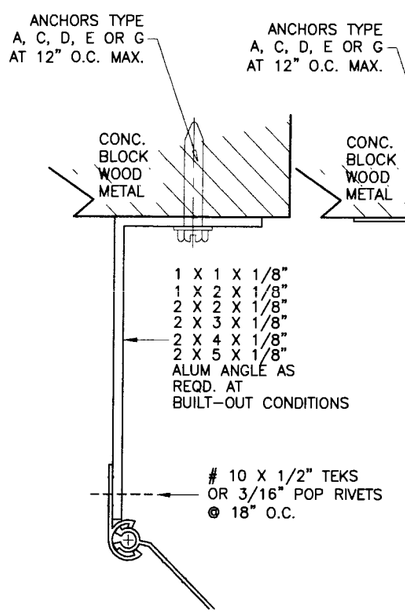

END CONDITION AT BUILT-OUT

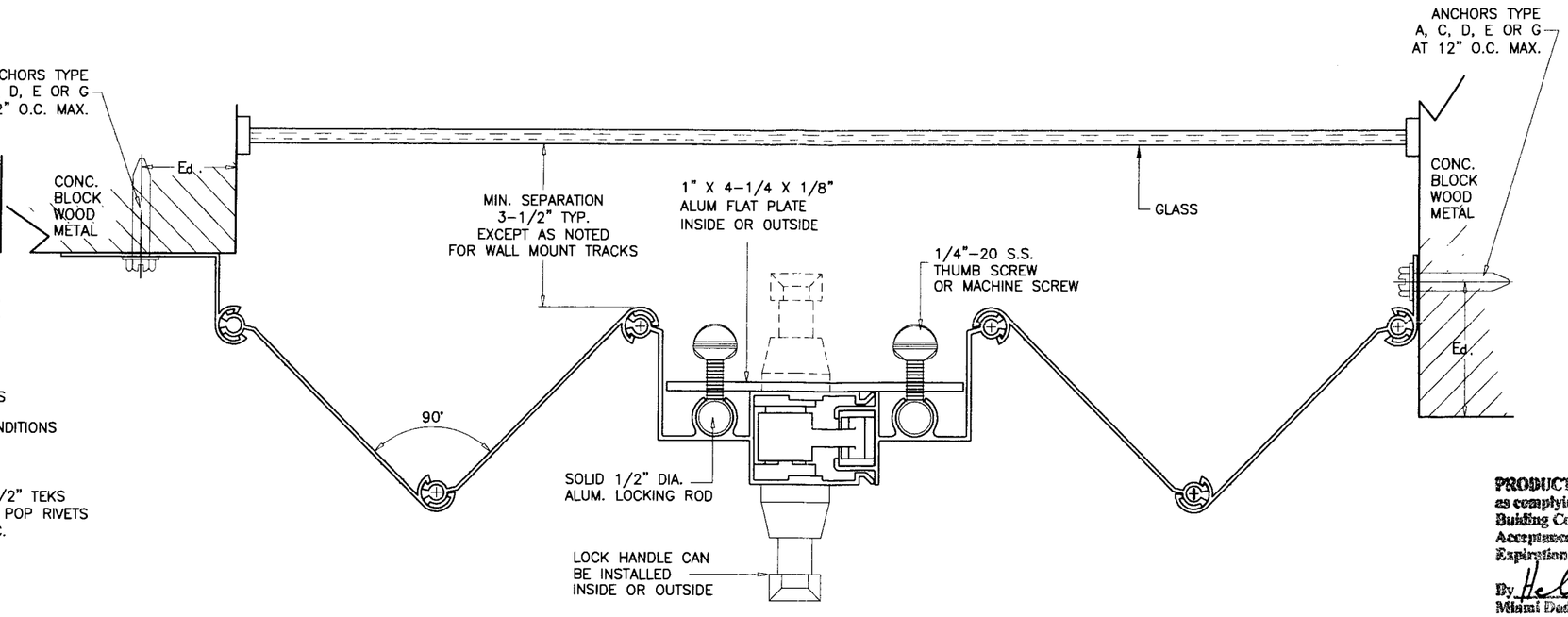

SECTION E-E

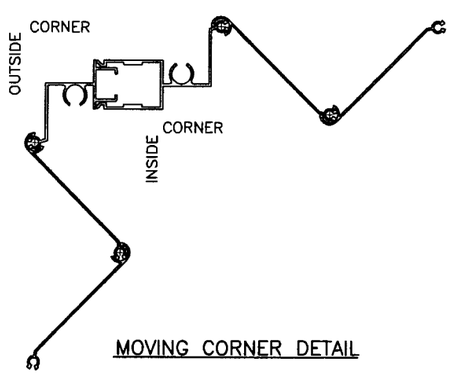

MOVING CORNER DETAIL

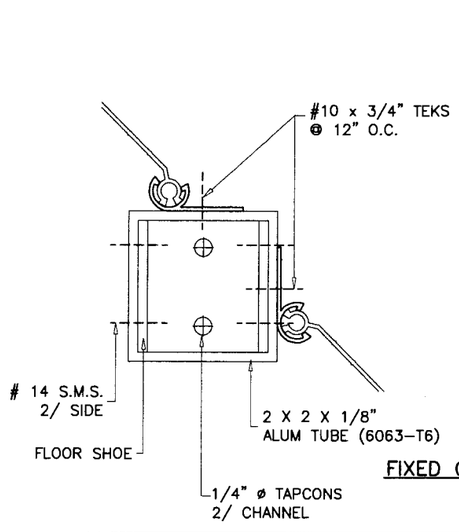

FIXED CORNER DETAIL

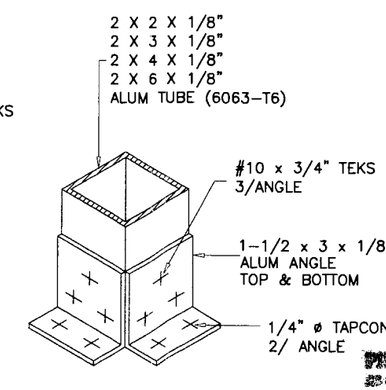

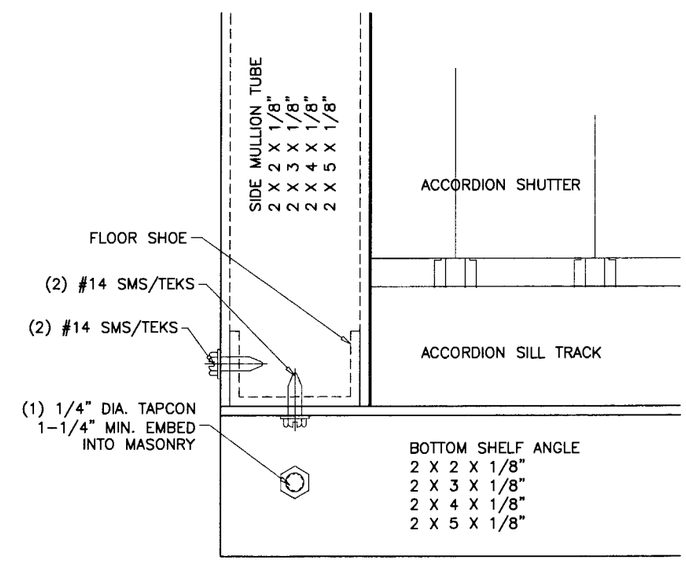

SIDE MULLION TO SHELF ANGLE CONNECTION

PRODUCT RENEWED
as complying with the Florida
Building Code
Acceptance No 09-0224.05
Expiration Date 02/27/2010
By Helen A. Martin
Miami Dade Product Control
Division

PRODUCT RENEWED
as complying with the Florida
Building Code
Acceptance No 08-0219.05
Expiration Date 02/27/2009
By Helen A. Martin
Miami Dade Product Control
Division

Engr: DR. HUMAYOUN FAROOQ
STRUCTURES
FLA. PE # 16557
C.A.N. 3538

JUL 14 2006

PRODUCT REVISED
as complying with the Florida
Building Code
Acceptance No 06-0213.03
Expiration Date 02/27/2008
By Helen A. Martin
Miami Dade Product Control
Division

AL-FAROOQ CORPORATION
ENGINEERS, PLANNERS & PRODUCT DESIGN
1235 SW 87 AVE
MIAMI, FLORIDA 33174
TEL. (305) 264-8100 FAX. (305) 262-6978

ACCORDION/96-19RNI

ACCORDION SHUTTER DETAILS

ROLLADEN INC.
550 ANSIN BLVD.
HALLANDALE, FL. 33009
TEL. (954) 757-8591 FAX. (954) 454-1577

revisions:

no	date	by	description

date: 04-25-96
scale: 1/2" = 1"
dr. by: HAMID
chk. by:

drawing no.
96-19

sheet 4 of 6

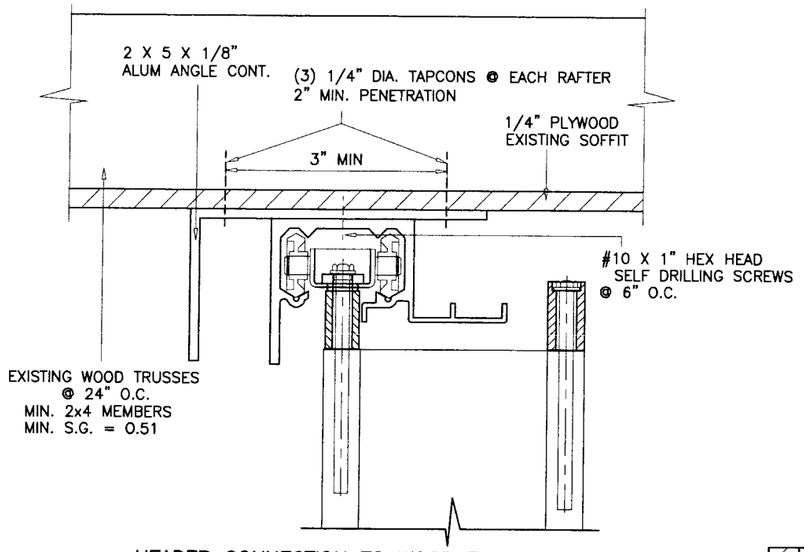

HEADER CONNECTION TO WOOD TRUSSES

FOR SHUTTER HEIGHT OF 108" MAX. DESIGN LOAD = 75 PSF
FOR SHUTTER HEIGHT OF 96" MAX. DESIGN LOAD = 84 PSF
FOR SHUTTER HEIGHT OF 84" MAX. DESIGN LOAD = 96 PSF

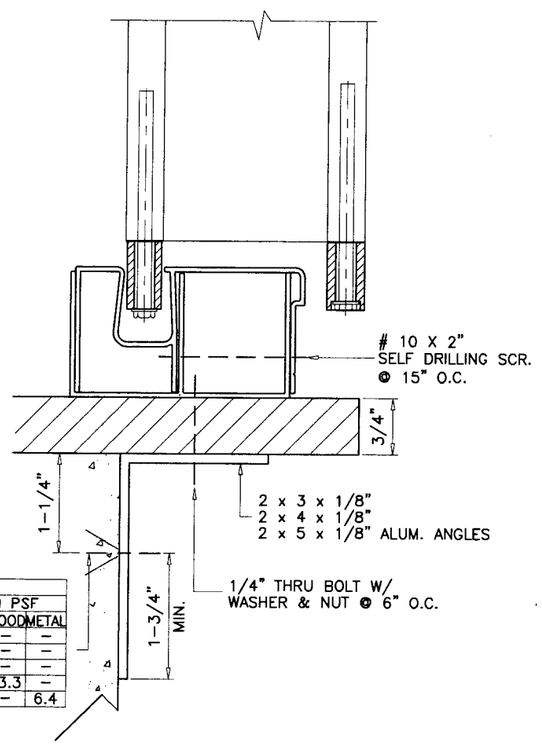

ANCHOR TYPE	ANCHOR SPACING INCHES							
	UPTO 40 PSF				UPTO 70 PSF			
	CONC	BLK.	WOOD	METAL	CONC	BLK.	WOOD	METAL
A	16.3	8.1	–	–	9.3	4.7	–	–
C	10.2	7.8	–	–	5.8	4.5	–	–
D	19.6	6.6	–	–	11.2	3.8	–	–
E	–	–	23.3	–	–	–	13.3	–
G	–	–	–	11.2	–	–	–	6.4

COUNTER TOP CONDITION
(PASS THRU WINDOW)
MAX SHUTTER HEIGHT = 6 FT.

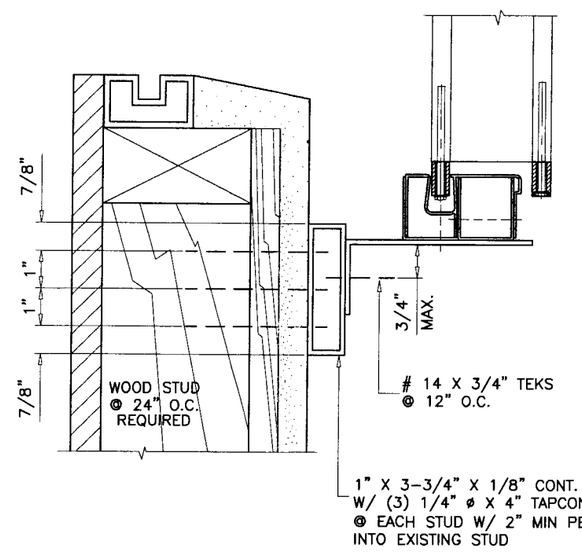

FOR SHUTTER HEIGHT OF 96" MAX. DESIGN LOAD = 92 PSF
FOR SHUTTER HEIGHT OF 84" MAX. DESIGN LOAD = 105 PSF

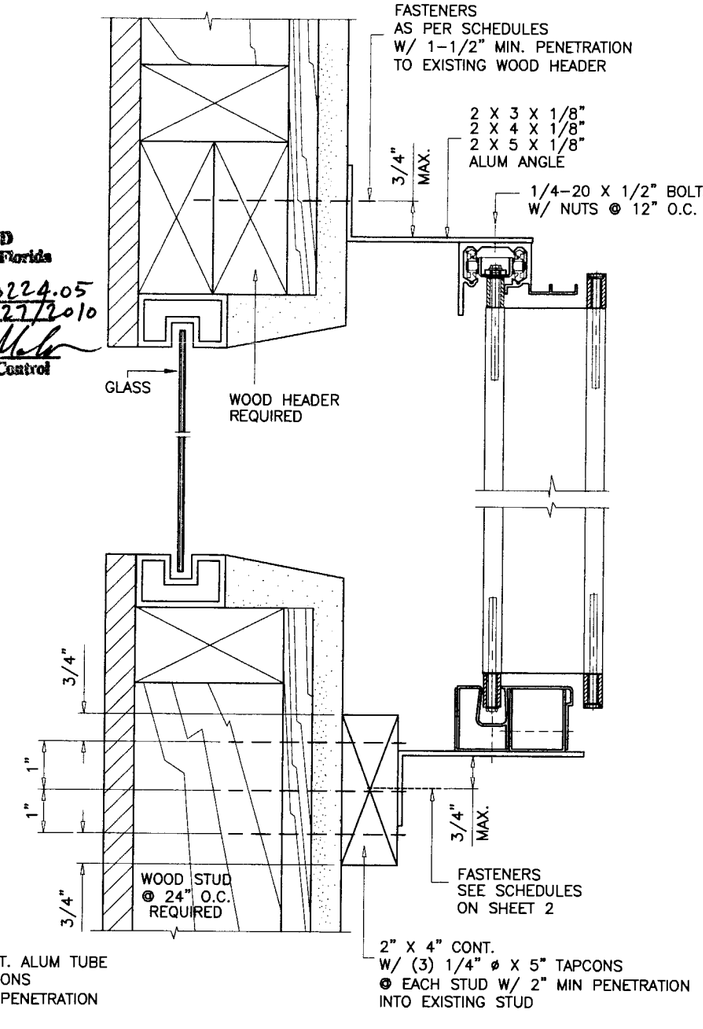

FOR SHUTTER HEIGHT OF 96" MAX. DESIGN LOAD = 80 PSF
FOR SHUTTER HEIGHT OF 84" MAX. DESIGN LOAD = 92 PSF
FOR SHUTTER HEIGHT OF 72" MAX. DESIGN LOAD = 105 PSF

INSTALLATION DETAIL ON EXISTING WOOD BUCKS SCALE : 1/4"=1"

FOR HEADER/SILL DETAILS CONNECTED TO CONTINUOUS WOOD MEMBERS SEE SHEETS 3 THRU 4.

PRODUCT RENEWED
as complying with the Florida
Building Code
Acceptance No 09-0224.05
Expiration Date 02/27/2010
By Helmy A. Mek
Miami Dade Product Control
Division

PRODUCT RENEWED
as complying with the Florida
Building Code
Acceptance No 08-0219.05
Expiration Date 02/27/2009
By Helmy A. Mek
Miami Dade Product Control
Division

Engr: DR. HUMAYOUN FAROOQ
STRUCTURES
FLA. PE # 16557
C.A.N. 3538

JUL 14 2006

PRODUCT REVISED
as complying with the Florida
Building Code
Acceptance No 06-0213.03
Expiration Date 02/27/2008
By Helmy A. Mek
Miami Dade Product Control
Division

AL-FAROOQ CORPORATION
ENGINEERS, PLANNERS & PRODUCT DESIGN
1235 SW 87 AVE
MIAMI, FLORIDA 33174
TEL. (305) 264-8100 FAX. (305) 262-6978

ACCORDION/96-19RNI

ACCORDION SHUTTER DETAILS

ROLLADEN INC.
550 ANSIN BLVD.
HALLANDALE, FL. 33009
TEL. (954) 757-8591 FAX. (954) 454-1577

revisions:		
no	date	by description

date: 04-25-96
scale: 1/2" = 1"
dr. by: HAMID
chk. by:

drawing no.
96-19

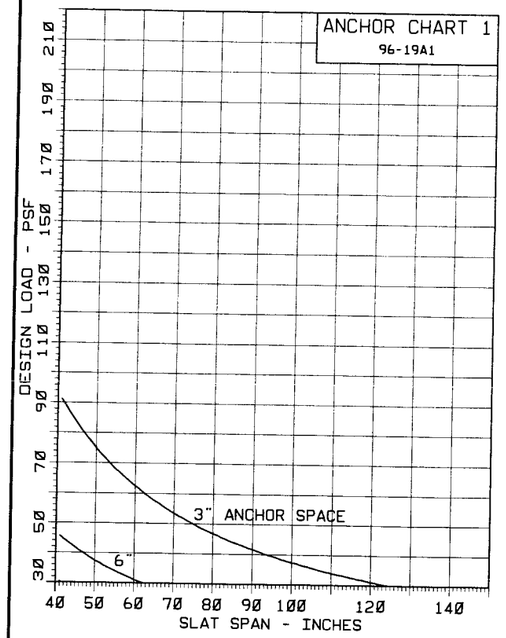

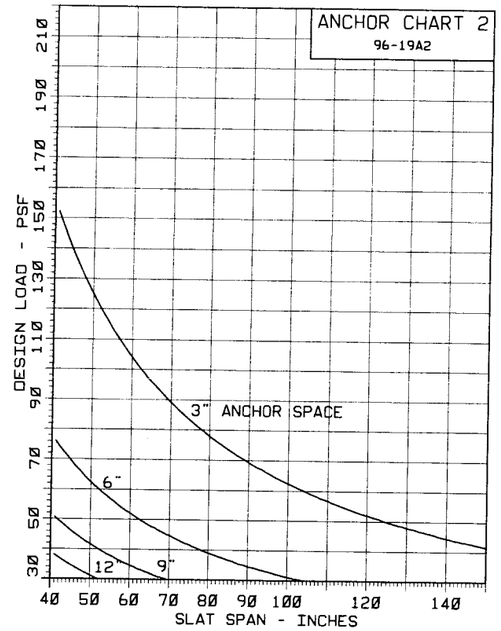

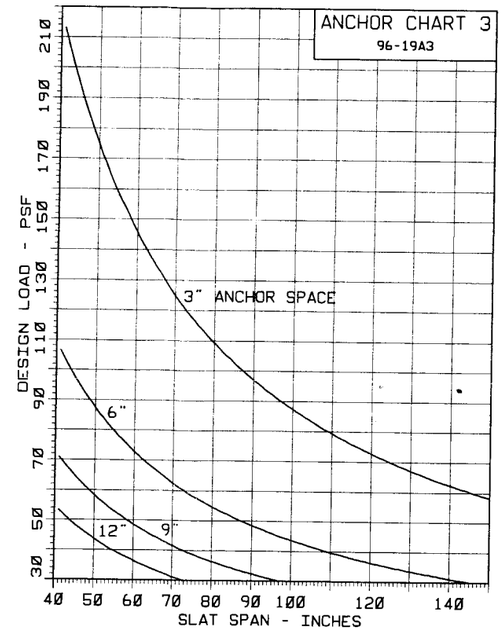

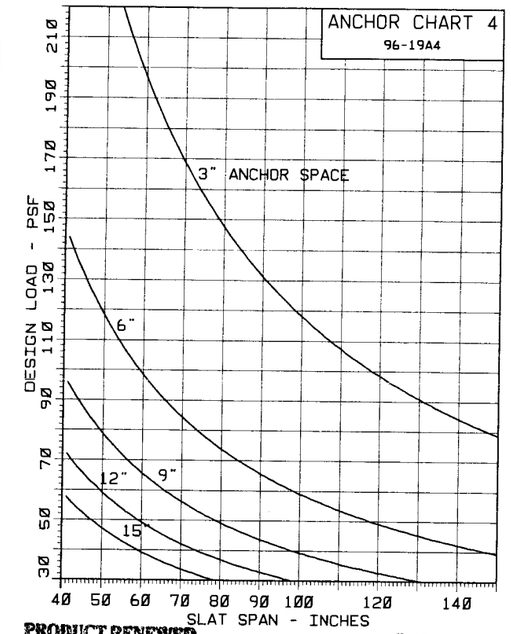

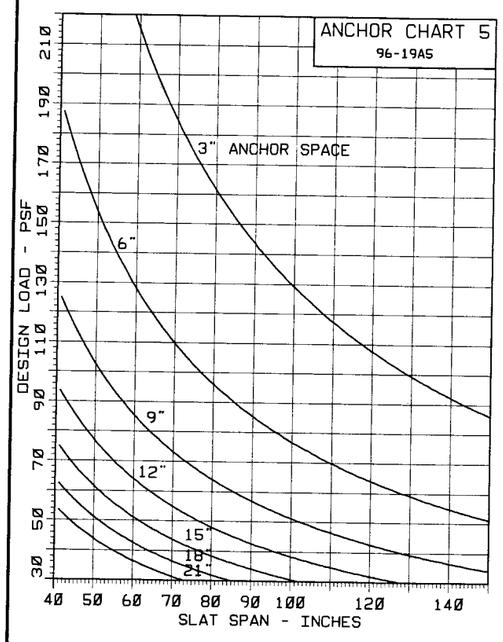

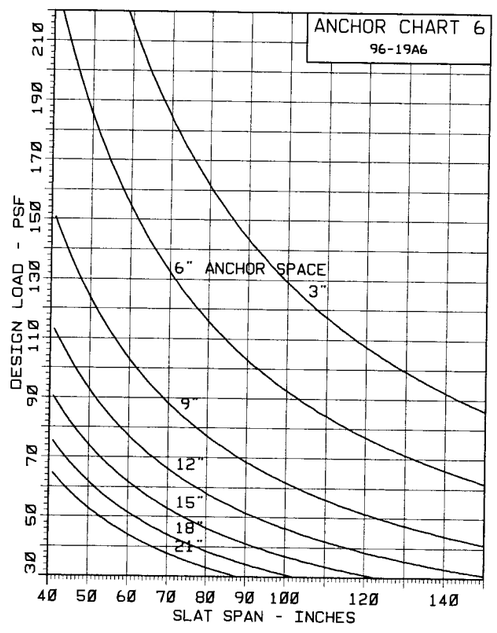

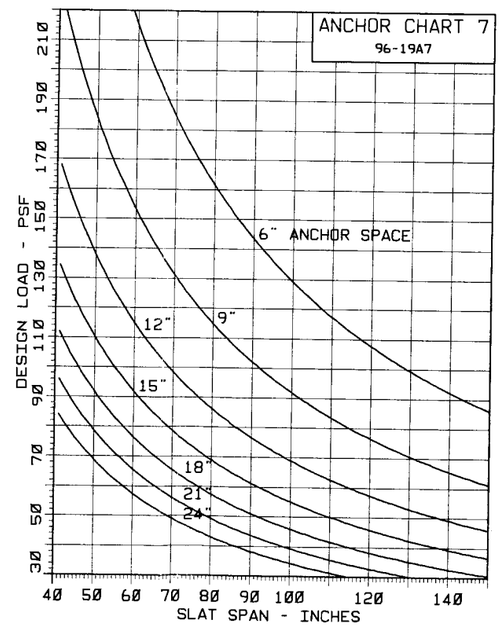

PRODUCT RENEWED
as complying with the Florida Building Code
Acceptance No 09-0224.05
Expiration Date 02/27/2010
By Helen A. Miller
Miami Dade Product Control Division

PRODUCT RENEWED
as complying with the Florida Building Code
Acceptance No 08-0219.05
Expiration Date 02/27/2009
By Helen A. Miller
Miami Dade Product Control Division

TYPICAL ANCHORS:

ANCHOR (A) = 1/4" DIA. TAPCONS (BY ELCO)
1-3/4" EMBEDMENT INTO 3000 PSI CONC.
1-1/4" EMBEDMENT INTO C-90 BLOCK

ANCHOR (C) = 1/4" ZAMAK NAILIN
1" EMBED. INTO 3000 PSI CONC. OR BLOCK

ANCHOR (D) = 1/4" RAWL CALK-IN
TOTAL ANCHOR BODY INTO 3000 PSI CONC. OR C-90 BLOCK

ANCHOR (E) = 1/4" DIA. TAPCONS
1-1/2" MIN PENETRATION INTO WOOD(S.G.=0.55)

ANCHOR (G) = 1/4" DIA. KWIK-FLEX SELF DRILLING SCREWS
INTO METAL STRUCTURES
(STEEL OR ALUMINUM 1/8" MIN. THICK.)

NOTE: ANCHORS EMBEDMENT SHOWN IS BEYOND WALL & FLOOR COVERINGS (STUCCO, TILES, ETC.)

FASTENER SPACING IN MASONRY

CHARTS ARE BASED ON TYPICAL EDGE DISTANCE = 12d.
FOR LESSER EDGE DISTANCE DECREASE SPACING BY MULTIPLYING WITH THE FACTOR BELOW

EDGE DIST.	12d=3"	10d=2-1/2"	8d=2"	6d=1-1/2"	5d=1-1/4"
FACTOR	1.00	0.86	0.71	0.57	0.50

EXAMPLE: FOR 3" EDGE DIST. SPACING = 12" O.C. (FROM CHART)
FOR 2" EDGE DIST. SPACING = 12 X .71 = 8.5 O.C.

TYPICAL EDGE DISTANCE IN WOOD = 3/4"
TYPICAL END DISTANCE IN WOOD = 1"
NO REDUCTION FACTOR IS REQUIRED

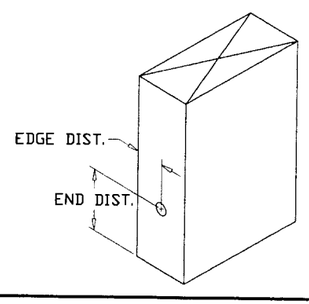

USE CHARTS 1 THRU 7 TO VERIFY ANCHOR REQUIREMENTS AND STRESS LIMITATIONS OF LOAD/SPAN COMBINATIONS FOR HEADER AND SILL.

Engr: DR. HUMAYOUN FAROOQ
STRUCTURES
FLA. PE # 16557
C.A.N. 3538

JUL 14 2006

PRODUCT REVISED
as complying with the Florida Building Code
Acceptance No 06-0213.03
Expiration Date 02/27/2008
By Helen A. Miller
Miami Dade Product Control Division

AL-FAROOQ CORPORATION
ENGINEERS, PLANNERS & PRODUCT DESIGN
1235 SW 87 AVE
MIAMI, FLORIDA 33174
TEL. (305) 264-8100 FAX. (305) 262-6978

ACCORDION/96-19RNI

ACCORDION SHUTTER DETAILS

ROLLADEN INC.
550 ANSIN BLVD.
HALLANDALE, FL. 33009
TEL. (954) 757-8591 FAX. (954) 454-1577

revisions:			
no.	date	by	description

date: 04-25-96
scale: 1/2" = 1"
dr. by: HAMID
chk. by:

drawing no. 96-19