MIAMI-DADE

BUILDING CODE COMPLIANCE OFFICE (BCCO)
PRODUCT CONTROL DIVISION

MIAMI-DADE COUNTY, FLORIDA
METRO-DADE FLAGLER BUILDING
140 WEST FLAGLER STREET, SUITE 1603
MIAMI, FLORIDA 33130-1563
(305) 375-2901 FAX (305) 375-2908

NOTICE OF ACCEPTANCE (NOA)

Titan Manufacturing, Inc.
W6606 Wege Rd.
Hortonville, WI 54944

SCOPE:
This NOA is being issued under the applicable rules and regulations governing the use of construction materials. The documentation submitted has been reviewed by Miami-Dade County Product Control Division and accepted by the Board of Rules and Appeals (BORA) to be used in Miami Dade County and other areas where allowed by the Authority Having Jurisdiction (AHJ).

This NOA shall not be valid after the expiration date stated below. The Miami-Dade County Product Control Division (In Miami Dade County) and/or the AHJ (in areas other than Miami Dade County) reserve the right to have this product or material tested for quality assurance purposes. If this product or material fails to perform in the accepted manner, the manufacturer will incur the expense of such testing and the AHJ may immediately revoke, modify, or suspend the use of such product or material within their jurisdiction. BORA reserves the right to revoke this acceptance, if it is determined by Miami-Dade County Product Control Division that this product or material fails to meet the requirements of the applicable building code.

This product is approved as described herein, and has been designed to comply with the Florida Building Code including the High Velocity Hurricane Zone of the Florida Building Code.

DESCRIPTION: Titan Shake Class C

LABELING: Each unit shall bear a permanent label with the manufacturer's name or logo, city, state and following statement: "Miami-Dade County Product Control Approved", unless otherwise noted herein.

RENEWAL of this NOA shall be considered after a renewal application has been filed and there has been no change in the applicable building code negatively affecting the performance of this product.

TERMINATION of this NOA will occur after the expiration date or if there has been a revision or change in the materials, use, and/or manufacture of the product or process. Misuse of this NOA as an endorsement of any product, for sales, advertising or any other purposes shall automatically terminate this NOA. Failure to comply with any section of this NOA shall be cause for termination and removal of NOA.

ADVERTISEMENT: The NOA number preceded by the words Miami-Dade County, Florida, and followed by the expiration date may be displayed in advertising literature. If any portion of the NOA is displayed, then it shall be done in its entirety.

INSPECTION: A copy of this entire NOA shall be provided to the user by the manufacturer or its distributors and shall be available for inspection at the job site at the request of the Building Official.

This NOA consists of pages 1 through 6.
The submitted documentation was reviewed by Alex Tigera.

MIAMI-DADE COUNTY APPROVED

ROOFING ASSEMBLY APPROVAL

Category:	Roofing
Sub-Category:	Roofing Tile
Materials:	Composite
Deck Type:	Wood
Fire Classification:	Class C
Maximum Design Pressure	**–129.25 psf**

TRADE NAMES OF PRODUCTS MANUFACTURED OR LABELED BY APPLICANT:

Product	Dimensions	Test Specifications	Product Description
Titan Shake Class C	Length: 24-1/4" Width: 12", 7", and 5" Thickness: 0.96" tapered to 0.22"	TAS 125	Shake looking composite shingle for use in mechanically attached systems.
Eave Starter	Length: 16" Width: 14" Thickness: 0.57" tapered to 0.135"	TAS 125	Composite shingle for use as a starter course with the Titan Shake Class C.

EVIDENCE SUBMITTED:

Test Agency	Test Identifier	Test Name/Report	Date
ETC Laboratories	ETC-07-718-20130.0	ASTM D 2843 ASTM D 1929 ASTM D 635	10/10/07
PRI Construciton Materials Technologies	TMIC-006-02-02	ASTM G 155	06/18/08
Southwest Research Institute	01.13537.01.301c	ASTM E 108	01/18/08
PRI Construciton Materials Technologies	TMIC-009-02-01	TAS 100	10/12/07
Hurricane Test Laboratory, LLC.	0497-0206-08	TAS 125	09/19/08

APPROVED ASSEMBLIES:

SYSTEM A:	Titan Shake Class C
Deck Type:	Wood, Non-insulated
Deck Description:	$^{19}/_{32}$" or greater plywood or wood plank
Slope Range:	2":12" or greater
Maximum Uplift	**See Maximum Design Pressures Below**

Deck Attachment: In accordance with applicable building code, but in no case shall it be less than # 8d annular ring shank nails spaced 6" o.c. In reroofing, where the deck is less than $^{19}/_{32}$" thick (Minimum $^{15}/_{32}$") the above attachment method must be in addition to existing attachment.

Underlayment: Minimum underlayment shall be an ASTM D 226 Type II installed with a minimum 4" side-lap and 6" end-laps. Underlayment shall be fastened with corrosion resistant tin-caps and 12 gauge 1 ¼" annular ring-shank nails, spaced 6" o.c. at all laps and two staggered rows 12" o.c. in the field of the roll. Or, any approved underlayment having a current NOA.

Valleys: Valley construction shall be in compliance with Roofing Application Standard RAS 118 and with Titan Manufacturing LLC's current published installation instructions.

Fire Barrier Board: Any approved fire barrier having a current NOA. Or for class A or B fire rating, install minimum ¼" thick Georgia Pacific "Dens Deck" (with current NOA) or minimum 4mm thick of Tritex, RockRoof (with current NOA) or $^{5}/_{8}$" water resistant type X gypsum sheathing with treated core and facer.

Eave Starter: Install starter over urethane caulk flush with the drip edge. Mechanically fasten the starter with two (2) 1/8" diameter x 2" long stainless steel ring shank nails placed 10-1/2" from the eave edge and 1-1/2" in from each side.

Tile Installation: Install the "Titan Shake Class C" and accessories in compliance with the current published installation instructions and details in Titan Manufacturing LLC's Installation Manual. Flashings, penetrations, valley construction and other details shall be constructed in compliance with Roofing Application Standard RAS 133.

Each shake is installed with (2) two 1/8" diameter stainless steel ring shank nails of sufficient length to penetrate through the sheathing a minimum 3/16" of an inch, through the designated nail holes. **(See Detail A)**

The adjoining shake is laid next to the existing shake with a 3/8" gap. The next row is laid with an 8" exposure. **(See Detail B)**

Maximum Design Pressure: **-129.25psf (See General Limitaiton #2)**

SYSTEM LIMITATIONS

1. Fire classification for this system is limited to a Class C.

2. The maximum designed pressure listed herein shall be applicable to all roof pressure zones (i.e. field, perimeters, and corners). Neither rational analysis, nor extrapolation shall be permitted for enhanced fastening at enhanced pressure zones (i.e. perimeters, extended corners and corners).

3. All tiles shall be permanently labeled with the manufacturer's name and/or logo, and the following statement: "Miami-Dade County Product Control Approved" or with the Miami-Dade Product Control Seal as seen below.

MIAMI-DADE COUNTY
APPROVED

4. All products listed herein shall have a quality assurance audit in accordance with the Florida Building Code and Rule 9B-72 of the Florida Administrative Code.

MANUFACTURING LOCATION:

1. West Liberty, IA

PROFILE DRAWINGS
DETAIL A

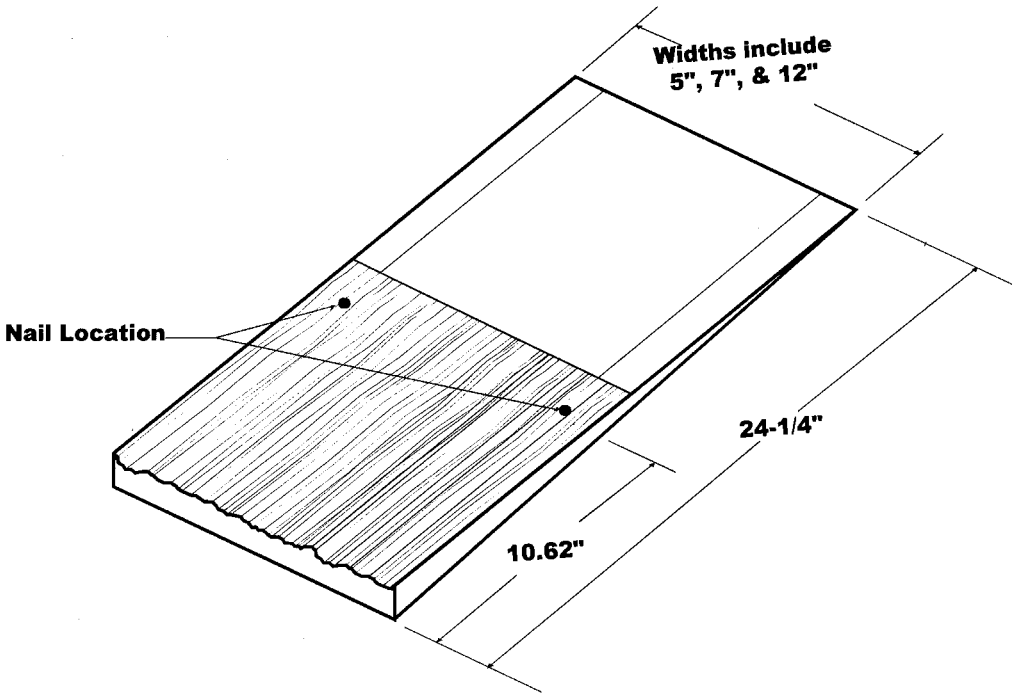

TITAN SHAKE CLASS C

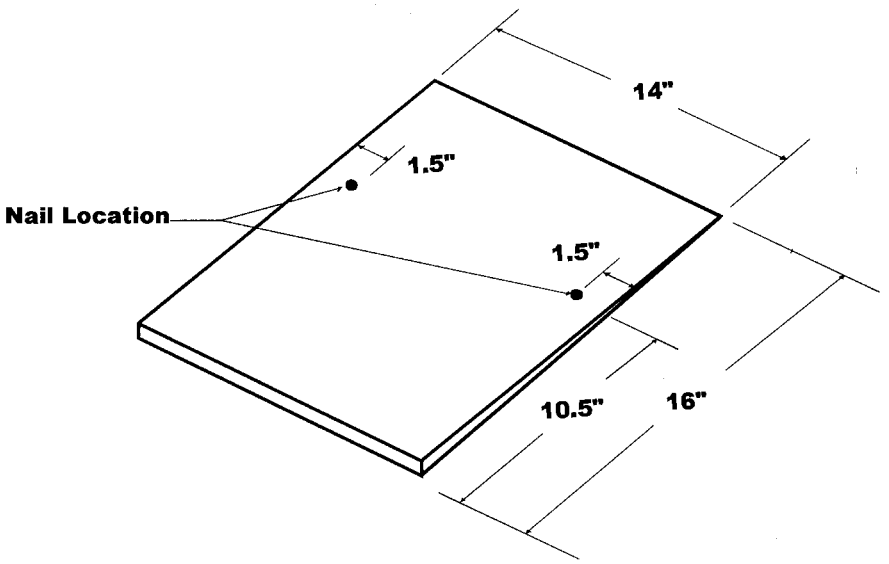

EAVE STARTER

DETAIL B

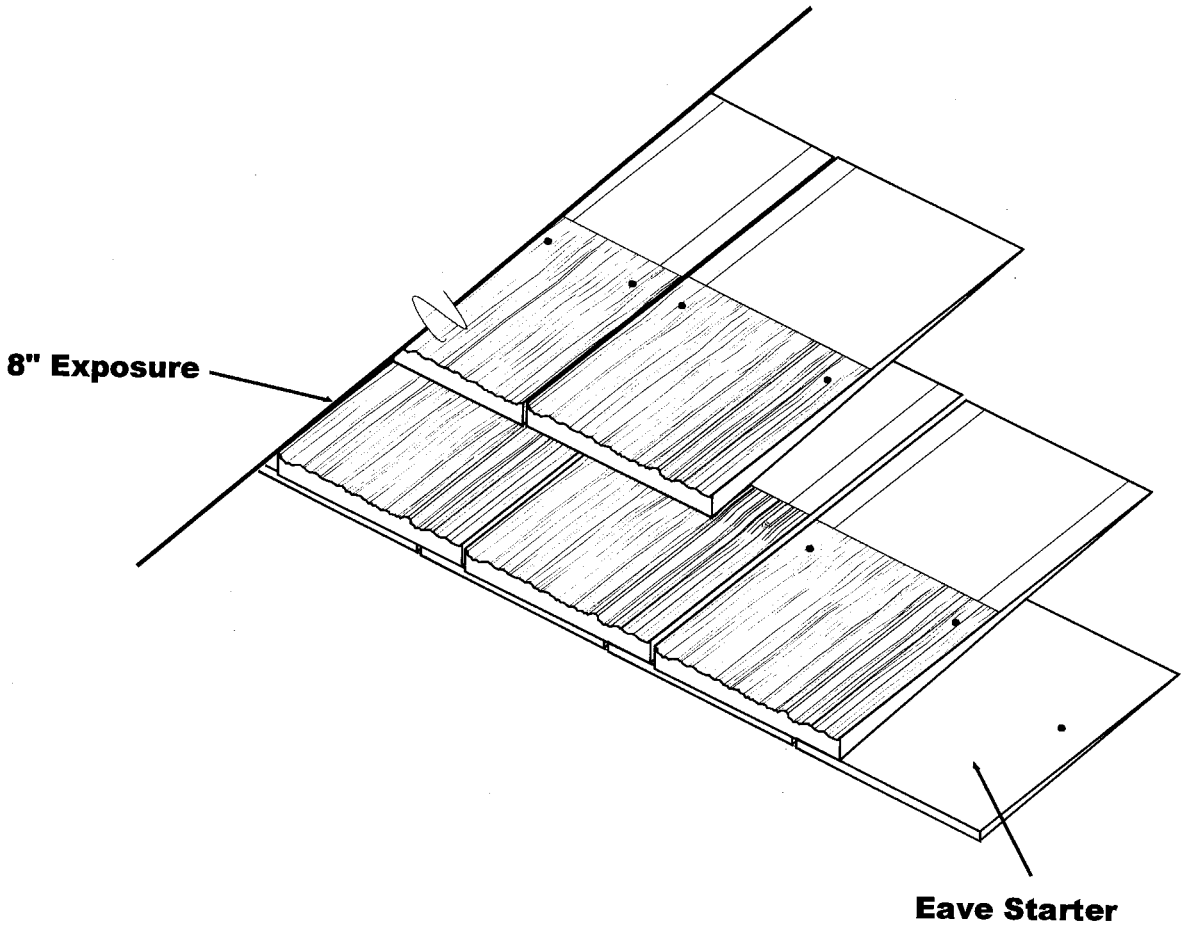

END OF THIS ACCEPTANCE