MIAMI-DADE COUNTY
BUILDING CODE COMPLIANCE OFFICE (BCCO)
PRODUCT CONTROL DIVISION

MIAMI-DADE COUNTY, FLORIDA
METRO-DADE FLAGLER BUILDING

140 WEST FLAGLER STREET, SUITE 1603
MIAMI, FLORIDA 33130-1563
(305) 375-2901 FAX (305) 375-2908
www.miamidade.gov

NOTICE OF ACCEPTANCE (NOA)

U. S. Fence, Inc. dba BARRETTE
7830 Freeway Circle
Middleburg Heights, OH 44130

SCOPE:
This NOA is being issued under the applicable rules and regulations governing the use of construction materials. The documentation submitted has been reviewed by Miami-Dade County Product Control Division and accepted by the Board of Rules and Appeals (BORA) to be used in Miami Dade County and other areas where allowed by the Authority Having Jurisdiction (AHJ).

This NOA shall not be valid after the expiration date stated below. The Miami-Dade County Product Control Division (In Miami Dade County) and/or the AHJ (in areas other than Miami Dade County) reserve the right to have this product or material tested for quality assurance purposes. If this product or material fails to perform in the accepted manner, the manufacturer will incur the expense of such testing and the AHJ may immediately revoke, modify, or suspend the use of such product or material within their jurisdiction. BORA reserves the right to revoke this acceptance, if it is determined by Miami-Dade County Product Control Division that this product or material fails to meet the requirements of the applicable building code.

This product is approved as described herein, and has been designed to comply with the High Velocity Hurricane Zone of the Florida Building Code.

DESCRIPTION: Extruded PVC Vinyl Fencing

APPROVAL DOCUMENT: Drawing No. USF2009NOA, titled " PVC Fence ", sheets 1 through 9 of 9, prepared by Rick Boyette Consulting, Inc., dated May 01, 2009, signed and sealed by Richard Boyette, P.E., on May 11, 2009, bearing the Miami-Dade County Product Control Revision stamp with the Notice of Acceptance number and the expiration date by the Miami-Dade County Product Control Division.

MISSILE IMPACT RATING: None

LABELING: Each fence section shall bear a permanent label with the manufacturer's name or logo, Bulls Gap, TN and the following statement: "Miami-Dade County Product Control Approved", unless otherwise noted herein.

RENEWAL of this NOA shall be considered after a renewal application has been filed and there has been no change in the applicable building code negatively affecting the performance of this product.

TERMINATION of this NOA will occur after the expiration date or if there has been a revision or change in the materials, use, and/or manufacture of the product or process. Misuse of this NOA as an endorsement of any product, for sales, advertising or any other purposes shall automatically terminate this NOA. Failure to comply with any section of this NOA shall be cause for termination and removal of NOA.

ADVERTISEMENT: The NOA number preceded by the words Miami-Dade County, Florida, and followed by the expiration date may be displayed in advertising literature. If any portion of the NOA is displayed, then it shall be done in its entirety.

INSPECTION: A copy of this entire NOA shall be provided to the user by the manufacturer or its distributors and shall be available for inspection at the job site at the request of the Building Official.

This NOA **revises NOA # 06-1205.11** and consists of this page 1, evidence submitted pages E-1, E-2, & E-3 as well as approval document mentioned above.

The submitted documentation was reviewed by **Helmy A. Makar, P.E., M.S.**

MIAMI-DADE COUNTY APPROVED

Helmy A. Makar
06/24/2009

NOA No. 09-0226.08
Expiration Date: 10/04/2011
Approval Date: 06/24/2009

U. S. Fence, Inc. dba BARRETTE

NOTICE OF ACCEPTANCE: EVIDENCE SUBMITTED

1. EVIDENCE SUBMITTED UNDER PREVIOUS APPROVAL #00-1030.01

A. DRAWINGS

1. *Drawings No. USF 1 titled "PVC FENCE", prepared by Robert F. Robins, P.E., signed and sealed by Robert F. Robins, P.E., dated September 04, 2001, sheets 1 through 5 of 5.*

B. TESTS

1. *Test report on Uniform Static Air Pressure Test, prepared by Celotex, Report # 0520511-6, dated August 7, 2000, signed and sealed by R. G. Miller, P.E.*
2. *Test report on Uniform Static Air Pressure Test, prepared by Celotex, Report # 0520511-5, dated August 7, 2000, signed and sealed by R. G. Miller, P.E.*
3. *Test report on Uniform Static Air Pressure Test, prepared by Celotex, Report # 0520511-4, dated August 7, 2000, signed and sealed by R. G. Miller, P.E.*
4. *Test report on Uniform Static Air Pressure Test, prepared by Celotex, Report # 0520511-2, dated August 7, 2000, signed and sealed by R. G. Miller, P.E.*
5. *Test report on Uniform Static Air Pressure Test, prepared by Celotex, Report # 0520511-1, dated August 7, 2000, signed and sealed by R. G. Miller, P.E.*

C. CALCULATIONS

1. *None.*

D. MATERIAL CERTIFICATIONS

1. *Tensile Test Report No. 25-7579, prepared by Center For Applied Engineering, Inc., dated October 31, 1996, signed and sealed by John M. Bridenstine, P.E.*

E. STATEMENTS

1. *Letter stating that the product has not changed, prepared by Universal Forest products, Inc., dated March 18, 1998, and issued by John Harper.*
2. *Letter regarding the lack of financial interest, prepared by Universal Forest products, Inc., dated March 17, 1998, signed by Wayne M. Knoth, P.E.*

2. EVIDENCE SUBMITTED UNDER PREVIOUS APPROVAL #02-0603.09

A. DRAWINGS

1. *Drawing No. USF 1, titled " PVC Fence ", sheets 1 through 5 of 5, prepared by Robert F. Robins, P.E., dated May 21, 2002, signed and sealed by Robert F. Robins, P.E.*

Helmy A. Makar, P. E., M.S.
Senior Product Control Examiner
NOA No. 09-0226.08
Expiration Date: 10/04/2011
Approval Date: 06/24/2009

B. TESTS

1. None.

C. CALCULATIONS

1. None.

D. MATERIAL CERTIFICATIONS

1. None.

3. EVIDENCE SUBMITTED UNDER PREVIOUS APPROVAL #02-0726.05

A. DRAWINGS

1. *Drawing No. USF 1, titled " PVC Fence ", sheets 1 through 5 of 5, prepared by Robert F. Robins, P.E., dated June 01, 2002, signed and sealed by Robert F. Robins, P.E.*

B. TESTS

1. *Test report on Uniform Static Air Pressure Test, prepared by Celotex, Report # 520511-11, dated October 1999, signed and sealed by R. G. Miller, P.E.*
2. *Test report on Uniform Static Air Pressure Test, prepared by Celotex, Report # 520511-10, dated October 1999, signed and sealed by R. G. Miller, P.E.*
3. *Test report on Uniform Static Air Pressure Test, prepared by Celotex, Report # 520511-9, dated November 1999, signed and sealed by R. G. Miller, P.E.*
4. *Test report on Uniform Static Air Pressure Test, prepared by Celotex, Report # 520511-8, dated December 1999, signed and sealed by R. G. Miller, P.E.*
5. *Test report on Uniform Static Air Pressure Test, prepared by Celotex, Report # 520511-7, dated December 1999, signed and sealed by R. G. Miller, P.E.*

C. CALCULATIONS

1. None.

D. MATERIAL CERTIFICATIONS

1. None.

4. EVIDENCE SUBMITTED UNDER PREVIOUS APPROVAL # 06-1205.11

A. DRAWINGS

1. None.

B. TESTS

1. None.

Helmy A. Makar, P. E., M.S.
Senior Product Control Examiner
NOA No. 09-0226.08
Expiration Date: 10/04/2011
Approval Date: 06/24/2009

C. CALCULATIONS

1. None.

D. QUALITY ASSURANCE

1. By Miami-Dade County Building Code Compliance Office.

E. MATERIAL CERTIFICATIONS

1. None.

5. NEW EVIDENCE SUBMITTED

A. DRAWINGS

1. Drawing No. USF2009NOA, titled " PVC Fence ", sheets 1 through 9 of 9, prepared by Rick Boyette Consulting, Inc., dated May 01, 2009, signed and sealed by Richard Boyette, P.E., on May 11, 2009.

B. TESTS

1. Test report on Uniform Static Air Pressure Test, prepared by Architectural Testing, Report # 86641.01-119-18, dated December 12, 2008, signed and sealed by Joseph A. Reed, P.E.

C. CALCULATIONS

1. Calculation to comply with FBC 2007 edition, 3 sheets, prepared by Rick Boyette Consulting, Inc., dated January 26, 2009, signed and sealed by Richard Boyette, P.E.

D. QUALITY ASSURANCE

1. By Miami-Dade County Building Code Compliance Office.

E. MATERIAL CERTIFICATIONS

1. Extruded Profile (Phantom) Specification sheets.

Helmy A. Makar, P. E., M.S.
Senior Product Control Examiner
NOA No. 09-0226.08
Expiration Date: 10/04/2011
Approval Date: 06/24/2009

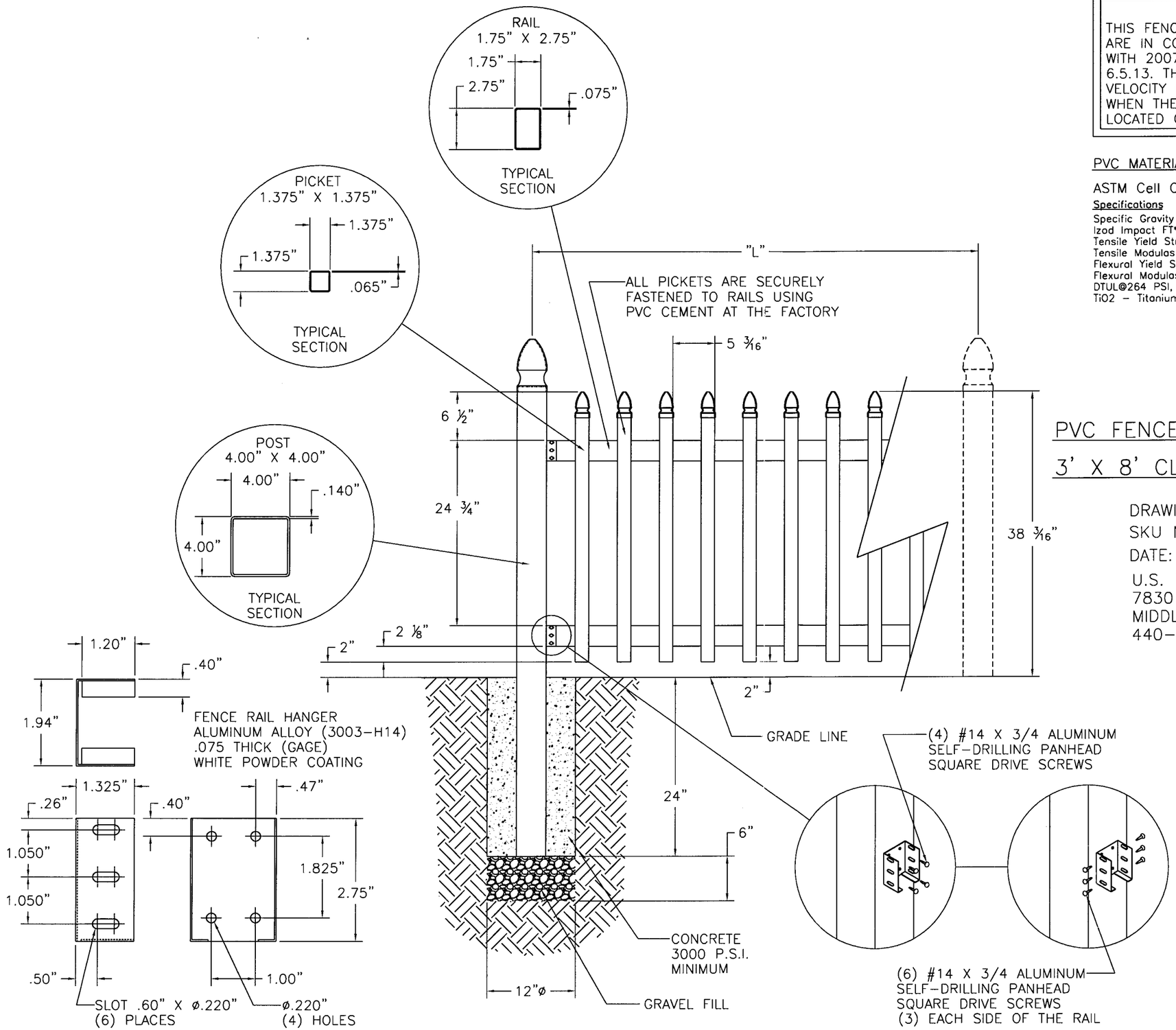

WIND LOAD RATING

THIS FENCE, IT'S VERTICAL SUPPORTS AND FOUNDATIONS, ARE IN COMPLIANCE WITH 2004 FLORIDA BUILDING CODE WITH 2007 SUPPLEMENT SEC.1612.2.1; ASCE 7-02 SEC. 6.5.13. THIS FENCE IS APPROVED FOR SUSTAINED WIND VELOCITY OF 75 MPH (90 MPH FOR 3 SECOND GUST) WHEN THE MAXIMUM POST CENTERS ("L") ARE 97.25" LOCATED ON CENTER.

PVC MATERIAL SPECIFICATIONS

ASTM Cell Classification 1-40323-13-0101 (D4216)

Specifications	Value	ASTM
Specific Gravity (±0.02) 0.125" Specimin	1.45	D-792
Izod Impact FT*lbs/in notch	17.0	D-256
Tensile Yield Strength, PSI	6,200	D-638
Tensile Modulas, PSI	365,000	D-638
Flexural Yield Strength, PSI	12,000	D-790
Flexural Modulas, PSI	410,000	D-790
DTUL@264 PSI, Degrees Celsius	72	D-648
TiO2 - Titanium Dioxide UV Inhibitor	10/100	-

PVC FENCE (PRE-BUILT PANEL STYLE)

3' X 8' CLASSIC GOTHIC 17-PICKET PANEL

DRAWING NO. USF2009NOA SHEET 1 OF 9
SKU NO. 73002105
DATE: 5/1/2009

U.S. FENCE, INC. dba BARRETTE
7830 FREEWAY CIRCLE
MIDDLEBURG HEIGHTS, OH 44130
440-891-0790

PRODUCT REVISED
as complying with the Florida Buiding Code
Acceptance No 09-0226.08
Expiration Date 10/04/2011
By Helena A. Melo
Miami Dade Product Control Division

APPROVED MAY 21 2009

Richard Boyette, FL P.E. 42485
Rick Boyette Consulting, Inc. CoA #9707
4031 Coconut Boulevard
Royal Palm Beach, Florida 33411
(561) 790-5766 / Fax (561) 784-7457

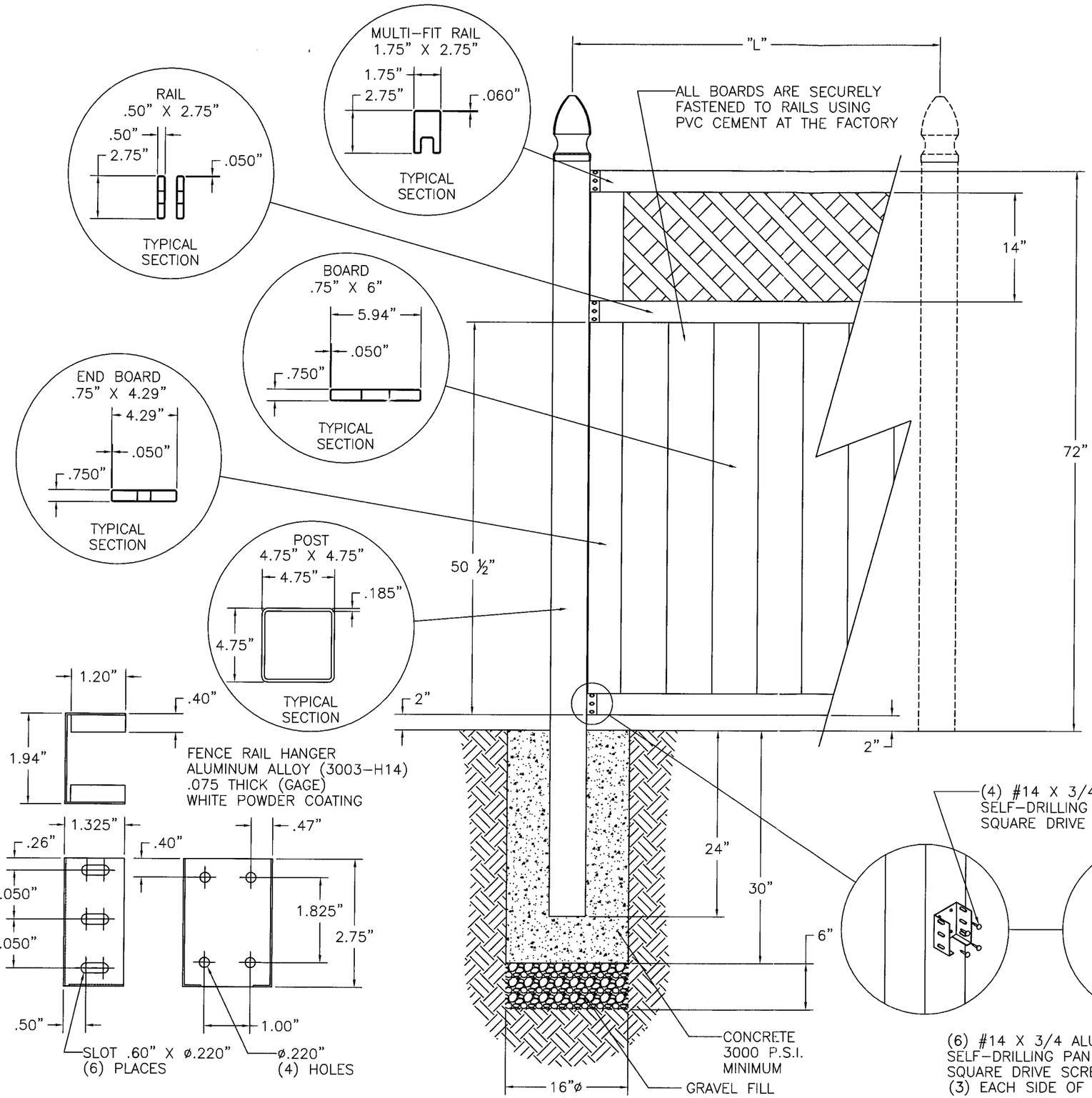

WIND LOAD RATING

THIS FENCE, IT'S VERTICAL SUPPORTS AND FOUNDATIONS, ARE IN COMPLIANCE WITH 2004 FLORIDA BUILDING CODE WITH 2007 SUPPLEMENT SEC.1612.2.1; ASCE 7-02 SEC. 6.5.13. THIS FENCE IS APPROVED FOR SUSTAINED WIND VELOCITY OF 75 MPH (90 MPH FOR 3 SECOND GUST) WHEN THE MAXIMUM POST CENTERS ("L") ARE 72.94" LOCATED ON CENTER.

PVC MATERIAL SPECIFICATIONS

ASTM Cell Classification 1-40323-13-0101 (D4216)

Specifications	Value	ASTM
Specific Gravity (±0.02) 0.125" Specimin	1.45	D-792
Izod Impact FT*lbs/in notch	17.0	D-256
Tensile Yield Strength, PSI	6,200	D-638
Tensile Modulas, PSI	365,000	D-638
Flexural Yield Strength, PSI	12,000	D-790
Flexural Modulas, PSI	410,000	D-790
DTUL@264 PSI, Degrees Celsius	72	D-648
TiO2 - Titanium Dioxide UV Inhibitor	10/100	-

PVC FENCE (PRE-BUILT PANEL STYLE)

6' X 6' LATTICE TOP PANEL

DRAWING NO. USF2009NOA SHEET 2 OF 9
SKU NO. 73002118
DATE: 5/1/2009

U.S. FENCE, INC. dba BARRETTE
7830 FREEWAY CIRCLE
MIDDLEBURG HEIGHTS, OH 44130
440-891-0790

PRODUCT REVISED
as complying with the Florida Building Code
Acceptance No. 09-0226.08
Expiration Date 10/04/2011
By [signature]
Miami Dade Product Control Division

APPROVED MAY 11 2009

Richard Boyette, FL P.E. 42485
Rick Boyette Consulting, Inc. CoA #9707
4031 Coconut Boulevard
Royal Palm Beach, Florida 33411
(561) 790-5766 / Fax (561) 784-7457

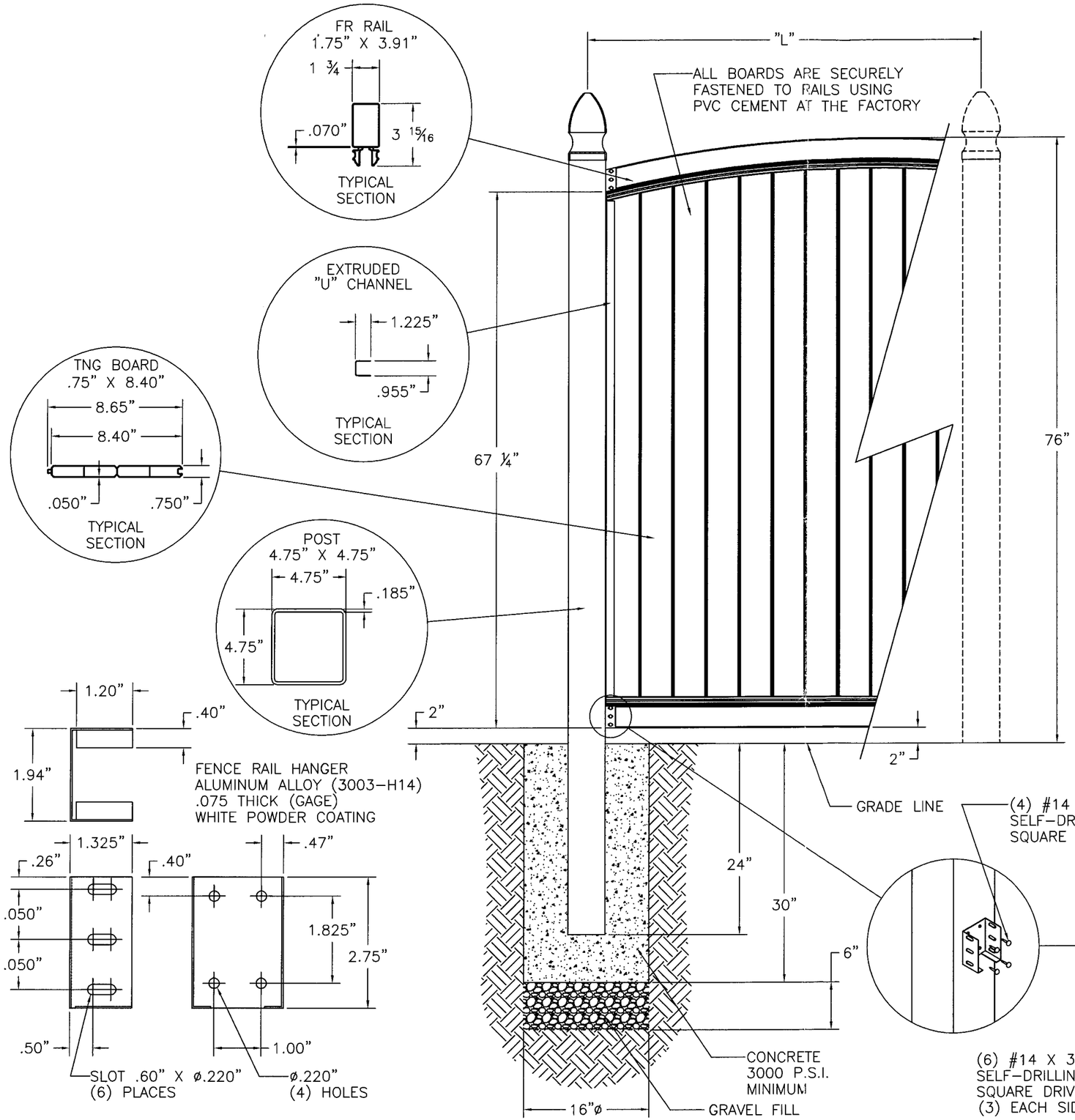

WIND LOAD RATING

THIS FENCE, IT'S VERTICAL SUPPORTS AND FOUNDATIONS, ARE IN COMPLIANCE WITH 2004 FLORIDA BUILDING CODE WITH 2007 SUPPLEMENT SEC.1612.2.1; ASCE 7-02 SEC. 6.5.13. THIS FENCE IS APPROVED FOR SUSTAINED WIND VELOCITY OF 75 MPH (90 MPH FOR 3 SECOND GUST) WHEN THE MAXIMUM POST CENTERS ("L") ARE 72.75" LOCATED ON CENTER.

PVC MATERIAL SPECIFICATIONS

ASTM Cell Classification 1-40323-13-0101 (D4216)

Specifications	Value	ASTM
Specific Gravity (±0.02) 0.125" Specimin	1.45	D-792
Izod Impact FT*lbs/in notch	17.0	D-256
Tensile Yield Strength, PSI	6,200	D-638
Tensile Modulas, PSI	365,000	D-638
Flexural Yield Strength, PSI	12,000	D-790
Flexural Modulas, PSI	410,000	D-790
DTUL@264 PSI, Degrees Celsius	72	D-648
TiO2 - Titanium Dioxide UV Inhibitor	10/100	-

PVC FENCE (PRE-BUILT PANEL STYLE)

PRINCETON ARCH TOP PRIVACY PANEL

DRAWING NO. USF2009NOA SHEET 3 OF 9
SKU NO. 73002296
DATE: 5/1/2009

U.S. FENCE, INC. dba BARRETTE
7830 FREEWAY CIRCLE
MIDDLEBURG HEIGHTS, OH 44130
440-891-0790

PRODUCT REVISED
as complying with the Florida Building Code
Acceptance No. 09-0226.08
Expiration Date 10/04/2011
By Helmy A. Mele
Miami Dade Product Control Division

APPROVED MAY 11 2009

Richard Boyette, FL P.E. 42485
Rick Boyette Consulting, Inc. CoA #9707
4031 Coconut Boulevard
Royal Palm Beach, Florida 33411
(561) 790-5766 / Fax (561) 784-7457

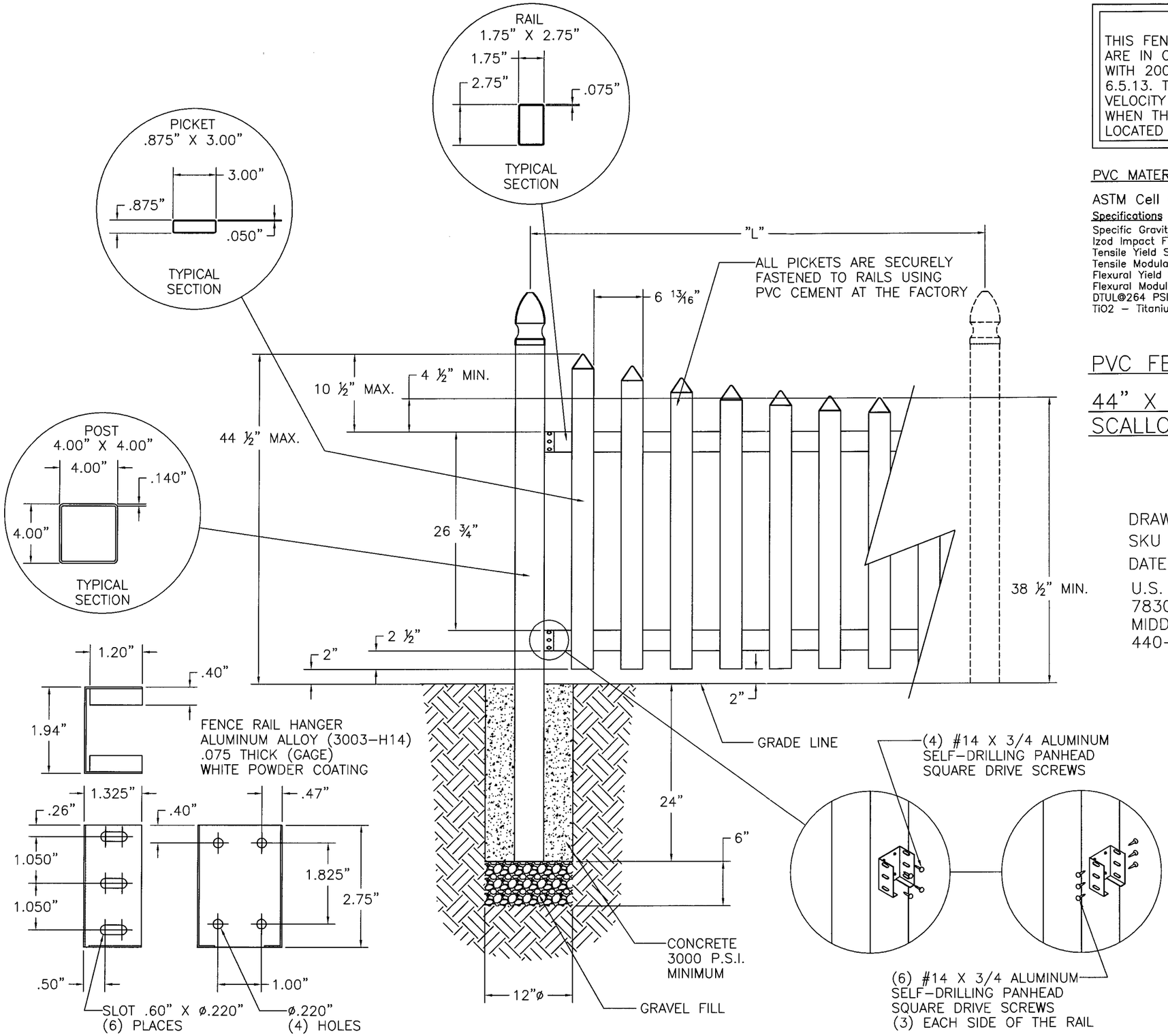

WIND LOAD RATING

THIS FENCE, IT'S VERTICAL SUPPORTS AND FOUNDATIONS, ARE IN COMPLIANCE WITH 2004 FLORIDA BUILDING CODE WITH 2007 SUPPLEMENT SEC.1612.2.1; ASCE 7-02 SEC. 6.5.13. THIS FENCE IS APPROVED FOR SUSTAINED WIND VELOCITY OF 75 MPH (90 MPH FOR 3 SECOND GUST) WHEN THE MAXIMUM POST CENTERS ("L") ARE 97.25" LOCATED ON CENTER.

PVC MATERIAL SPECIFICATIONS

ASTM Cell Classification 1-40323-13-0101 (D4216)

Specifications	Value	ASTM
Specific Gravity (±0.02) 0.125" Specimin	1.45	D-792
Izod Impact FT*lbs/in notch	17.0	D-256
Tensile Yield Strength, PSI	6,200	D-638
Tensile Modulas, PSI	365,000	D-638
Flexural Yield Strength, PSI	12,000	D-790
Flexural Modulas, PSI	410,000	D-790
DTUL@264 PSI, Degrees Celsius	72	D-648
TiO2 - Titanium Dioxide UV Inhibitor	10/100	-

PVC FENCE (PRE-BUILT PANEL STYLE)

44" X 8' WESTFIELD PICKET SCALLOP PANEL

DRAWING NO. USF2009NOA SHEET 4 OF 9
SKU NO. 73002494
DATE: 5/1/2009

U.S. FENCE, INC. dba BARRETTE
7830 FREEWAY CIRCLE
MIDDLEBURG HEIGHTS, OH 44130
440-891-0790

PRODUCT REVISED
as complying with the Florida Building Code
Acceptance No 09-0226.08
Expiration Date 10/04/2011
By Helen A. Mele
Miami Dade Product Control Division

APPROVED MAY 11 2009

Richard Boyette, FL P.E. 42485
Rick Boyette Consulting, Inc. CoA #9707
4031 Coconut Boulevard
Royal Palm Beach, Florida 33411
(561) 790-5766 / Fax (561) 784-7457

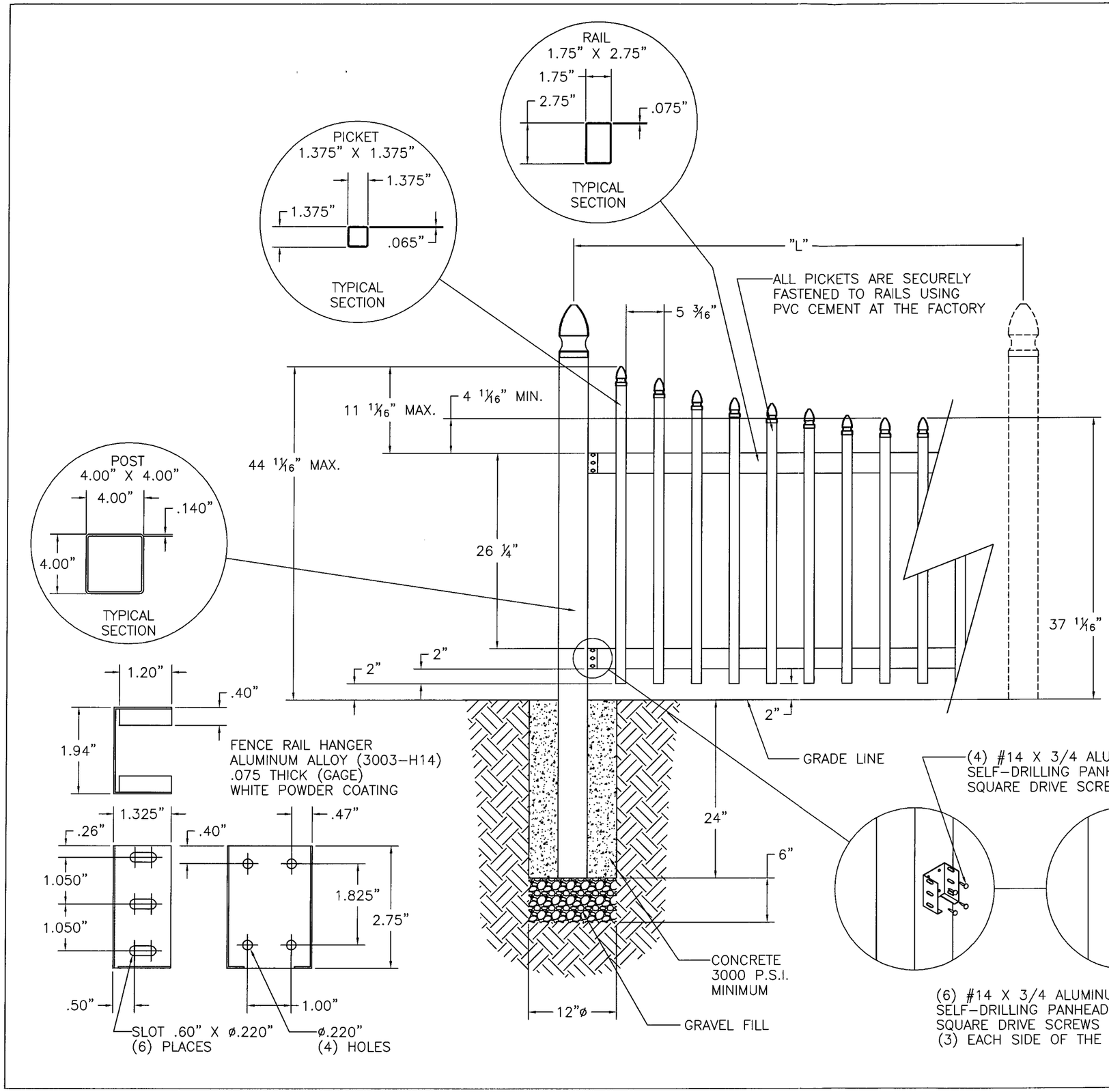

WIND LOAD RATING

THIS FENCE, IT'S VERTICAL SUPPORTS AND FOUNDATIONS, ARE IN COMPLIANCE WITH 2004 FLORIDA BUILDING CODE WITH 2007 SUPPLEMENT SEC.1612.2.1; ASCE 7-02 SEC. 6.5.13. THIS FENCE IS APPROVED FOR SUSTAINED WIND VELOCITY OF 75 MPH (90 MPH FOR 3 SECOND GUST) WHEN THE MAXIMUM POST CENTERS ("L") ARE 97.25" LOCATED ON CENTER.

PVC MATERIAL SPECIFICATIONS

ASTM Cell Classification 1-40323-13-0101 (D4216)

Specifications	Value	ASTM
Specific Gravity (±0.02) 0.125" Specimin	1.45	D-792
Izod Impact FT*lbs/in notch	17.0	D-256
Tensile Yield Strength, PSI	6,200	D-638
Tensile Modulas, PSI	365,000	D-638
Flexural Yield Strength, PSI	12,000	D-790
Flexural Modulas, PSI	410,000	D-790
DTUL@264 PSI, Degrees Celsius	72	D-648
TiO2 - Titanium Dioxide UV Inhibitor	10/100	-

PVC FENCE (PRE-BUILT PANEL STYLE)

42" X 8' DELUXE CLASSIC GOTHIC SCALLOP PANEL

DRAWING NO. USF2009NOA SHEET 5 OF 9
SKU NO. 73002954
DATE: 5/1/2009

U.S. FENCE, INC. dba BARRETTE
7830 FREEWAY CIRCLE
MIDDLEBURG HEIGHTS, OH 44130
440-891-0790

PRODUCT REVISED
as complying with the Florida Buiding Code
Acceptance No 09-0226.08
Expiration Date 10/04/2011
By Helmy A. Melo
Miami Dade Product Control Division

APPROVED MAY 11 2009

Richard Boyette, FL P.E. 42485
Rick Boyette Consulting, Inc. CoA #9707
4031 Coconut Boulevard
Royal Palm Beach, Florida 33411
(561) 790-5766 / Fax (561) 784-7457

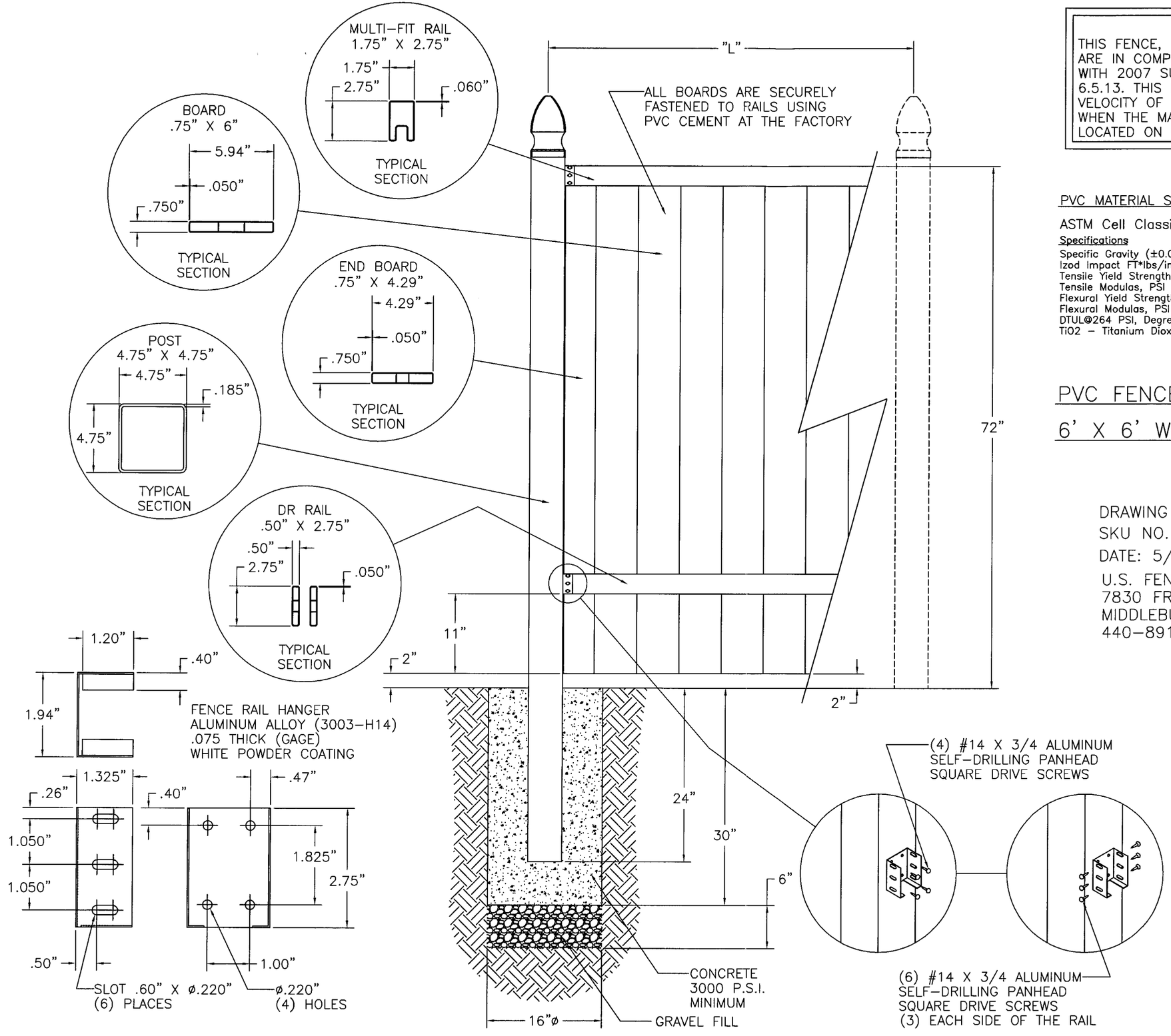

WIND LOAD RATING

THIS FENCE, IT'S VERTICAL SUPPORTS AND FOUNDATIONS, ARE IN COMPLIANCE WITH 2004 FLORIDA BUILDING CODE WITH 2007 SUPPLEMENT SEC.1612.2.1; ASCE 7-02 SEC. 6.5.13. THIS FENCE IS APPROVED FOR SUSTAINED WIND VELOCITY OF 75 MPH (90 MPH FOR 3 SECOND GUST) WHEN THE MAXIMUM POST CENTERS ("L") ARE 73" LOCATED ON CENTER.

PVC MATERIAL SPECIFICATIONS

ASTM Cell Classification 1-40323-13-0101 (D4216)

Specifications	Value	ASTM
Specific Gravity (±0.02) 0.125" Specimin	1.45	D-792
Izod Impact FT*lbs/in notch	17.0	D-256
Tensile Yield Strength, PSI	6,200	D-638
Tensile Modulas, PSI	365,000	D-638
Flexural Yield Strength, PSI	12,000	D-790
Flexural Modulas, PSI	410,000	D-790
DTUL@264 PSI, Degrees Celsius	72	D-648
TiO2 - Titanium Dioxide UV Inhibitor	10/100	-

PVC FENCE (PRE-BUILT PANEL STYLE)

6' X 6' WEATHERFORD PANEL

DRAWING NO. USF2009NOA SHEET 6 OF 9
SKU NO. 73002970
DATE: 5/1/2009

U.S. FENCE, INC. dba BARRETTE
7830 FREEWAY CIRCLE
MIDDLEBURG HEIGHTS, OH 44130
440-891-0790

PRODUCT REVISED
as complying with the Florida Buiding Code
Acceptance No 09-0226.08
Expiration Date 10/04/2011
By [signature]
Miami Dade Product Control Division

APPROVED MAY 11 2009

Richard Boyette, FL P.E. 42485
Rick Boyette Consulting, Inc. CoA #9707
4031 Coconut Boulevard
Royal Palm Beach, Florida 33411
(561) 790-5766 / Fax (561) 784-7457

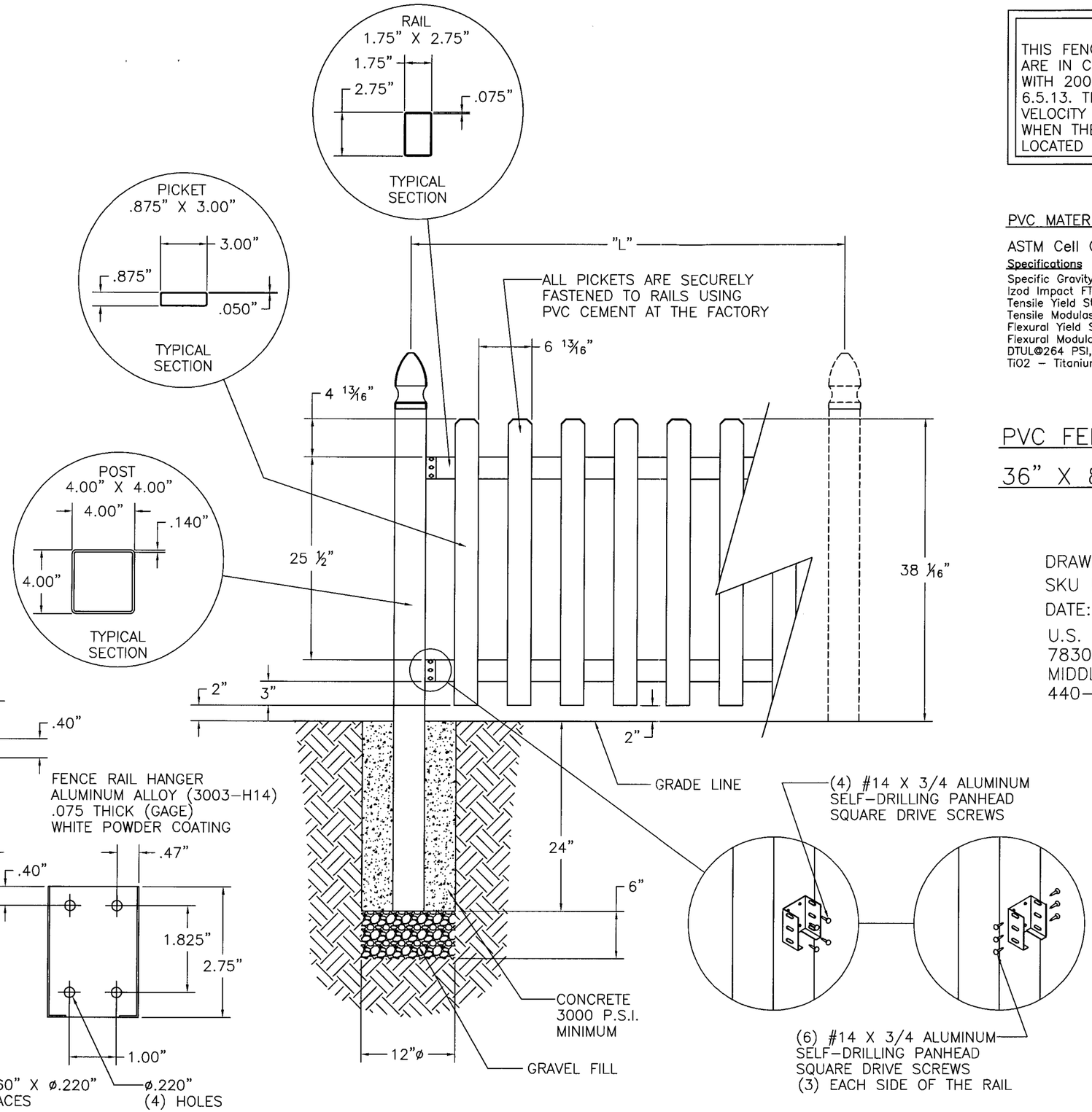

WIND LOAD RATING

THIS FENCE, IT'S VERTICAL SUPPORTS AND FOUNDATIONS, ARE IN COMPLIANCE WITH 2004 FLORIDA BUILDING CODE WITH 2007 SUPPLEMENT SEC.1612.2.1; ASCE 7-02 SEC. 6.5.13. THIS FENCE IS APPROVED FOR SUSTAINED WIND VELOCITY OF 75 MPH (90 MPH FOR 3 SECOND GUST) WHEN THE MAXIMUM POST CENTERS ("L") ARE 97.25" LOCATED ON CENTER.

PVC MATERIAL SPECIFICATIONS

ASTM Cell Classification 1-40323-13-0101 (D4216)

Specifications	Value	ASTM
Specific Gravity (±0.02) 0.125" Specimin	1.45	D-792
Izod Impact FT*lbs/in notch	17.0	D-256
Tensile Yield Strength, PSI	6,200	D-638
Tensile Modulas, PSI	365,000	D-638
Flexural Yield Strength, PSI	12,000	D-790
Flexural Modulas, PSI	410,000	D-790
DTUL@264 PSI, Degrees Celsius	72	D-648
TiO2 - Titanium Dioxide UV Inhibitor	10/100	-

PVC FENCE (PRE-BUILT PANEL STYLE)

36" X 8' DOGEAR PICKET PANEL

DRAWING NO. USF2009NOA SHEET 7 OF 9
SKU NO. 73003186
DATE: 5/1/2009

U.S. FENCE, INC. dba BARRETTE
7830 FREEWAY CIRCLE
MIDDLEBURG HEIGHTS, OH 44130
440-891-0790

PRODUCT REVISED
as complying with the Florida Buiding Code
Acceptance No. 09-0226.08
Expiration Date 10/04/2011
By Helen A. Melo
Miami Dade Product Control Division

APPROVED MAY 11 2009

Richard Boyette, FL P.E. 42485
Rick Boyette Consulting, Inc. CoA #9707
4031 Coconut Boulevard
Royal Palm Beach, Florida 33411
(561) 790-5766 / Fax (561) 784-7457

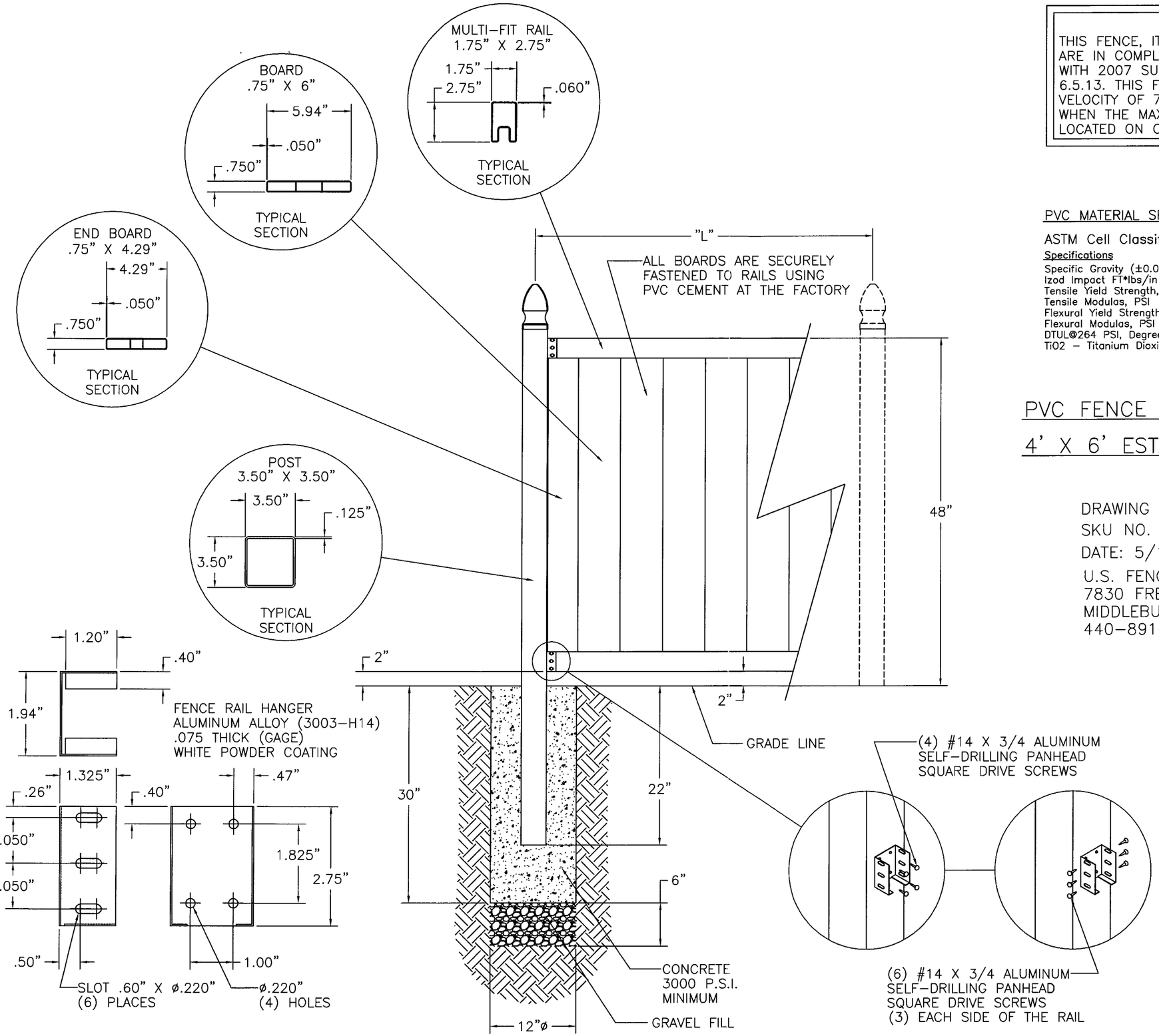

WIND LOAD RATING

THIS FENCE, IT'S VERTICAL SUPPORTS AND FOUNDATIONS, ARE IN COMPLIANCE WITH 2004 FLORIDA BUILDING CODE WITH 2007 SUPPLEMENT SEC.1612.2.1; ASCE 7-02 SEC. 6.5.13. THIS FENCE IS APPROVED FOR SUSTAINED WIND VELOCITY OF 75 MPH (90 MPH FOR 3 SECOND GUST) WHEN THE MAXIMUM POST CENTERS ("L") ARE 72.94" LOCATED ON CENTER.

PVC MATERIAL SPECIFICATIONS

ASTM Cell Classification 1-40323-13-0101 (D4216)

Specifications	Value	ASTM
Specific Gravity (±0.02) 0.125" Specimin	1.45	D-792
Izod Impact FT*lbs/in notch	17.0	D-256
Tensile Yield Strength, PSI	6,200	D-638
Tensile Modulas, PSI	365,000	D-638
Flexural Yield Strength, PSI	12,000	D-790
Flexural Modulas, PSI	410,000	D-790
DTUL@264 PSI, Degrees Celsius	72	D-648
TiO2 - Titanium Dioxide UV Inhibitor	10/100	-

PVC FENCE (PRE-BUILT PANEL STYLE)

4' X 6' ESTATE PRIVACY PANEL

DRAWING NO. USF2009NOA SHEET 8 OF 9
SKU NO. 73007053
DATE: 5/1/2009

U.S. FENCE, INC. dba BARRETTE
7830 FREEWAY CIRCLE
MIDDLEBURG HEIGHTS, OH 44130
440-891-0790

PRODUCT REVISED
as complying with the Florida Building Code
Acceptance No 09-0226.08
Expiration Date 10/04/2011
By Helena A. Melo
Miami Dade Product Control Division

APPROVED MAY 11 2009

Richard Boyette, FL P.E. 42485
Rick Boyette Consulting, Inc. CoA #9707
4031 Coconut Boulevard
Royal Palm Beach, Florida 33411
(561) 790-5766 / Fax (561) 784-7457

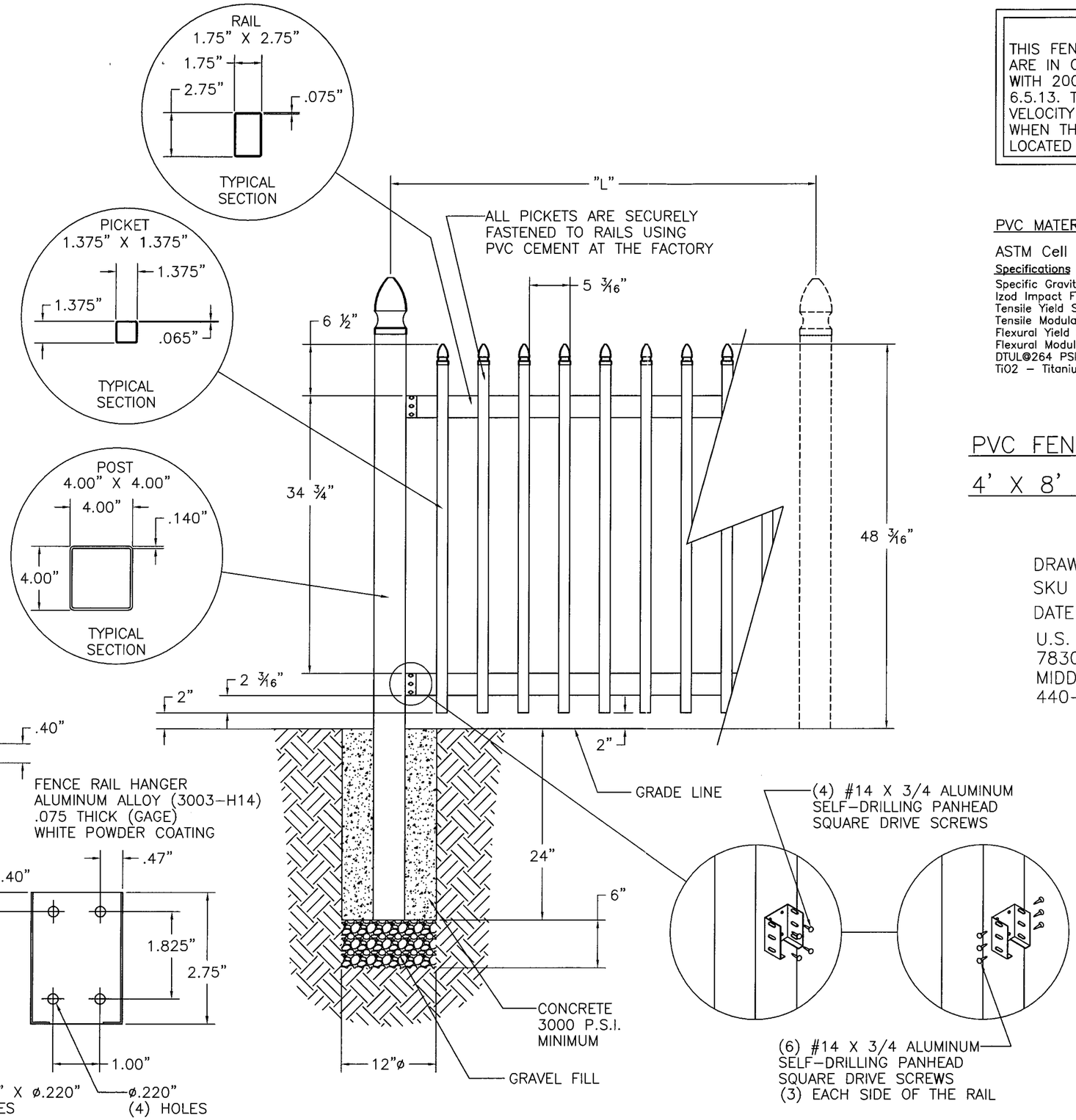

WIND LOAD RATING

THIS FENCE, IT'S VERTICAL SUPPORTS AND FOUNDATIONS, ARE IN COMPLIANCE WITH 2004 FLORIDA BUILDING CODE WITH 2007 SUPPLEMENT SEC.1612.2.1; ASCE 7-02 SEC. 6.5.13. THIS FENCE IS APPROVED FOR SUSTAINED WIND VELOCITY OF 75 MPH (90 MPH FOR 3 SECOND GUST) WHEN THE MAXIMUM POST CENTERS ("L") ARE 97.25" LOCATED ON CENTER.

PVC MATERIAL SPECIFICATIONS

ASTM Cell Classification 1-40323-13-0101 (D4216)

Specifications	Value	ASTM
Specific Gravity (±0.02) 0.125" Specimin	1.45	D-792
Izod Impact FT*lbs/in notch	17.0	D-256
Tensile Yield Strength, PSI	6,200	D-638
Tensile Modulas, PSI	365,000	D-638
Flexural Yield Strength, PSI	12,000	D-790
Flexural Modulas, PSI	410,000	D-790
DTUL@264 PSI, Degrees Celsius	72	D-648
TiO2 - Titanium Dioxide UV Inhibitor	10/100	-

PVC FENCE (PRE-BUILT PANEL STYLE)

4' X 8' CLASSIC GOTHIC PICKET PANEL

DRAWING NO. USF2009NOA SHEET 9 OF 9
SKU NO. 73010272
DATE: 5/1/2009

U.S. FENCE, INC. dba BARRETTE
7830 FREEWAY CIRCLE
MIDDLEBURG HEIGHTS, OH 44130
440-891-0790

PRODUCT REVISED
as complying with the Florida Buiding Code
Acceptance No 09-0226.08
Expiration Date 10/04/2011
By Helena A. Weber
Miami Dade Product Control Division

APPROVED MAY 11 2009

Richard Boyette, FL P.E. 42485
Rick Boyette Consulting, Inc. CoA #9707
4031 Coconut Boulevard
Royal Palm Beach, Florida 33411
(561) 790-5766 / Fax (561) 784-7457