MIAMI-DADE COUNTY
BUILDING CODE COMPLIANCE OFFICE (BCCO)
PRODUCT CONTROL DIVISION

MIAMI-DADE COUNTY, FLORIDA
METRO-DADE FLAGLER BUILDING
140 WEST FLAGLER STREET, SUITE 1603
MIAMI, FLORIDA 33130-1563
(305) 375-2901 FAX (305) 372-6339
www.miamidade.gov/buildingcode

# NOTICE OF ACCEPTANCE (NOA)

**R.C. Aluminum Industries, Inc.**
**2805 N.W. 75th Avenue**
**Miami, FL 33122**

**SCOPE:**

This NOA is being issued under the applicable rules and regulations governing the use of construction materials. The documentation submitted has been reviewed by Miami-Dade County Product Control Division and accepted by the Board of Rules and Appeals (BORA) to be used in Miami Dade County and other areas where allowed by the Authority Having Jurisdiction (AHJ).

This NOA shall not be valid after the expiration date stated below. The Miami-Dade County Product Control Division (In Miami Dade County) and/or the AHJ (in areas other than Miami Dade County) reserve the right to have this product or material tested for quality assurance purposes. If this product or material fails to perform in the accepted manner, the manufacturer will incur the expense of such testing and the AHJ may immediately revoke, modify, or suspend the use of such product or material within their jurisdiction. BORA reserves the right to revoke this acceptance, if it is determined by Miami-Dade County Product Control Division that this product or material fails to meet the requirements of the applicable building code. This product is approved as described herein, and has been designed to comply with the Florida Building Code, including the High Velocity Hurricane Zone.

**DESCRIPTION: Series "SH 100" Aluminum Single Hung Window – L.M.I.**

**APPROVAL DOCUMENT:** Drawing No. **W04-19**, titled "SH100 Alum Single Hung Window (L.M.I.)", sheets 1 through 4 of 4, dated 03/09/04 with revision C dated 09/19/08, prepared by Al-Farooq Corporation, signed and sealed by Humayoun Farooq, P.E., bearing the Miami-Dade County Product Control Revision stamp with the Notice of Acceptance number and expiration date by the Miami-Dade County Product Control Division.

**MISSILE IMPACT RATING: Large Missile Impact Resistant**

**LABELING:** Each unit shall bear a permanent label with the manufacturer's name or logo, city, state and following statement: "Miami-Dade County Product Control Approved", unless otherwise noted herein.

**RENEWAL** of this NOA shall be considered after a renewal application has been filed and there has been no change in the applicable building code negatively affecting the performance of this product.

**TERMINATION** of this NOA will occur after the expiration date or if there has been a revision or change in the materials, use, and/or manufacture of the product or process. Misuse of this NOA as an endorsement of any product, for sales, advertising or any other purposes shall automatically terminate this NOA. Failure to comply with any section of this NOA shall be cause for termination and removal of NOA.

**ADVERTISEMENT:** The NOA number preceded by the words Miami-Dade County, Florida, and followed by the expiration date may be displayed in advertising literature. If any portion of the NOA is displayed, then it shall be done in its entirety.

**INSPECTION:** A copy of this entire NOA shall be provided to the user by the manufacturer or its distributors and shall be available for inspection at the job site at the request of the Building Official.

This NOA **revises and renews NOA # 06-1130.04** and consists of this page 1 and evidence pages E-1 and E-2, as well as approval document mentioned above.

The submitted documentation was reviewed by **Manuel Perez, P.E.**

MIAMI-DADE COUNTY APPROVED

**R.C. Aluminum Industries, Inc.**

## NOTICE OF ACCEPTANCE: EVIDENCE SUBMITTED

**A. DRAWINGS**

1. Manufacturer's die drawings and sections.
2. Drawing No **W04-19**, Sheets 1 through 4 of 4, titled "SH100 Alum Single Hung Window (L.M.I.)", and dated 03/09/04 with revision C dated 09/19/08, prepared by Al-Farooq Corporation, signed and sealed by Humayoun Farooq, P.E.

**B. TESTS**

1. Test reports on: 1) Air Infiltration Test, per FBC, TAS 202-94
   2) Uniform Static Air Pressure Test, Loading per FBC, TAS 20294
   3) Water Resistance Test, per FBC, TAS 202-94
   4) Large Missile Impact Test per FBC, TAS 201-94
   5) Cyclic Wind Pressure Loading per FBC, TAS 203-94
   6) Forced Entry Test, per FBC 2411.3.2.1 and TAS 202-94

   along with marked-up drawings and installation diagram of aluminum single hung windows mulled together, prepared by Fenestration Testing Laboratories, Inc. Test Report No. **FTL-4024** dated 01/14/04, signed and sealed by Edmundo J. Largaespada, P.E.
   ***(Submitted under previous NOA #06-1130.04)***
2. Test reports on: 1) Air Infiltration Test, per FBC, TAS 202-94
   2) Uniform Static Air Pressure Test, Loading per FBC, TAS 20294
   3) Water Resistance Test, per FBC, TAS 202-94
   4) Large Missile Impact Test per FBC, TAS 201-94
   5) Cyclic Wind Pressure Loading per FBC, TAS 203-94
   6) Forced Entry Test, per FBC 2411.3.2.1 and TAS 202-94

   along with marked-up drawings and installation diagram of an aluminum single hung window, prepared by Fenestration Testing Laboratories, Inc. Test Report No. **FTL-4005** dated 01/14/04, signed and sealed by Edmundo J. Largaespada, P.E.
   ***(Submitted under previous NOA #06-1130.04)***

**C. CALCULATIONS**

1. Anchor verification calculations and structural analysis, complying with FBC-2007, prepared by Al-Farooq Corporation, dated 09/23/08, signed and sealed by Humayoun Farooq, P.E.
   **Complies with ASTM E1300-02/04**

**D. QUALITY ASSURANCE**

1. Miami Dade Building Code Compliance Office (BCCO).

**Manuel Perez, P.E.**
**Product Control Examiner**
**NOA No. 09-0303.05**
**Expiration Date: June 24, 2014**
**Approval Date: June 17, 2009**

## NOTICE OF ACCEPTANCE: EVIDENCE SUBMITTED

### E. MATERIAL CERTIFICATIONS

1. Notice of Acceptance No. **09-0312.02** issued to E.I. DuPont DeNemours & Co., Inc. for their "**DuPont Butacite® PVB, Interlayer**" dated 05/13/09, expiring on 12/11/10.

### F. STATEMENTS

1. Statement letter of conformance, dated September 23, 2008, signed and sealed by Humayoun Farooq, P.E.
2. Laboratory compliance letters for Test Report No. **FTL-4005** and **FTL-4024**, issued by Fenestration Testing Laboratory, Inc., both dated February 9, 2004, signed and sealed by Edmundo Largaespada, P.E.
   ***(Submitted under previous NOA #06-1130.04)***

### G. OTHERS

1. Notice of Acceptance No. **06-1130.04**, issued to R.C. Aluminum Industries, Inc. for their Series "SH 100" Aluminum Single Hung Window – L.M.I., approved on 04/05/07 and expiring on 06/24/09.

**Manuel Perez, P.E.**
**Product Control Examiner**
**NOA No. 09-0303.05**
**Expiration Date: June 24, 2014**
**Approval Date: June 17, 2009**

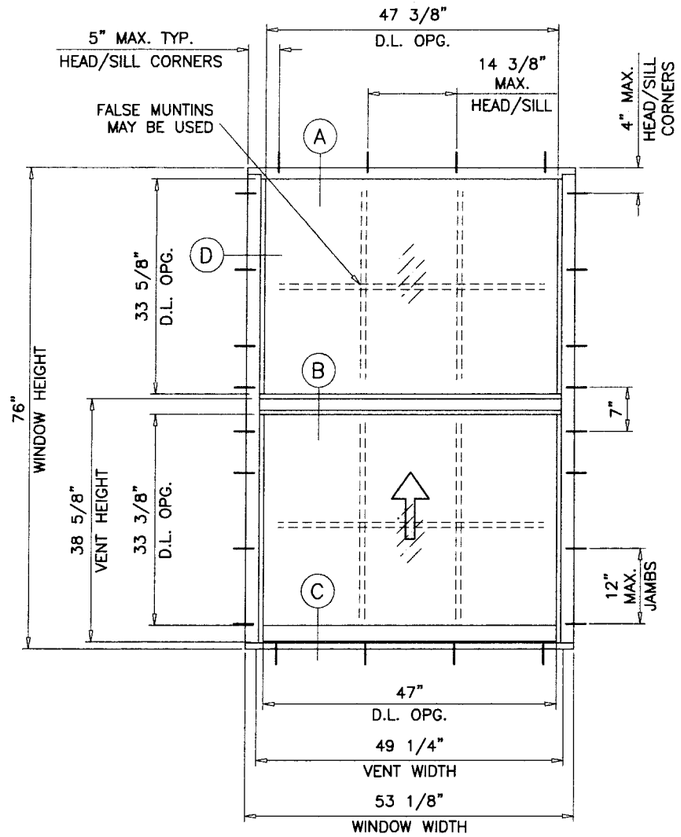


TYPICAL ELEVATION

TESTED UNIT

## SH100 ALUM SINGLE HUNG WINDOW

DESIGN LOAD RATINGS FOR THESE WINDOWS TO BE AS PER CHART SHOWN ABOVE.

APPROVAL APPLIES TO SINGLE UNITS OR SIDE BY SIDE COMBINATIONS OF S.H./S.H. OR SINGLE HUNG WITH OTHER WINDOW TYPES IN MODULES OF TWO OR MORE WINDOWS USING MIAMI-DADE COUNTY APPROVED MULLIONS IN BETWEEN. LOWER DESIGN PRESSURE FROM WINDOWS OR MULLION APPROVAL WILL APPLY TO ENTIRE SYSTEM.

THIS PRODUCT HAS BEEN DESIGNED AND TESTED TO COMPLY WITH THE REQUIREMENTS OF THE FLORIDA BUILDING CODE 2004/2007 EDITION INCLUDING HIGH VELOCITY HURRICANE ZONE (HVHZ).

WOOD BUCKS BY OTHERS, MUST BE ANCHORED PROPERLY TO TRANSFER LOADS TO THE STRUCTURE.

ANCHORS SHALL BE AS LISTED, SPACED AS SHOWN ON DETAILS, ANCHORS EMBEDMENT TO BASE MATERIAL SHALL BE BEYOND WALL DRESSING OR STUCCO.

ANCHORING OR LOADING CONDITIONS NOT SHOWN IN THESE DETAILS ARE NOT PART OF THIS APPROVAL.

A LOAD DURATION INCREASE IS USED IN DESIGN OF ANCHORS INTO WOOD ONLY.

MATERIALS INCLUDING BUT NOT LIMITED TO STEEL/METAL SCREWS, THAT COME INTO CONTACT WITH OTHER DISSIMILAR MATERIALS SHALL MEET THE REQUIREMENTS OF 2004/2007 FLORIDA BLDG. CODE SECTION 2003.8.4.

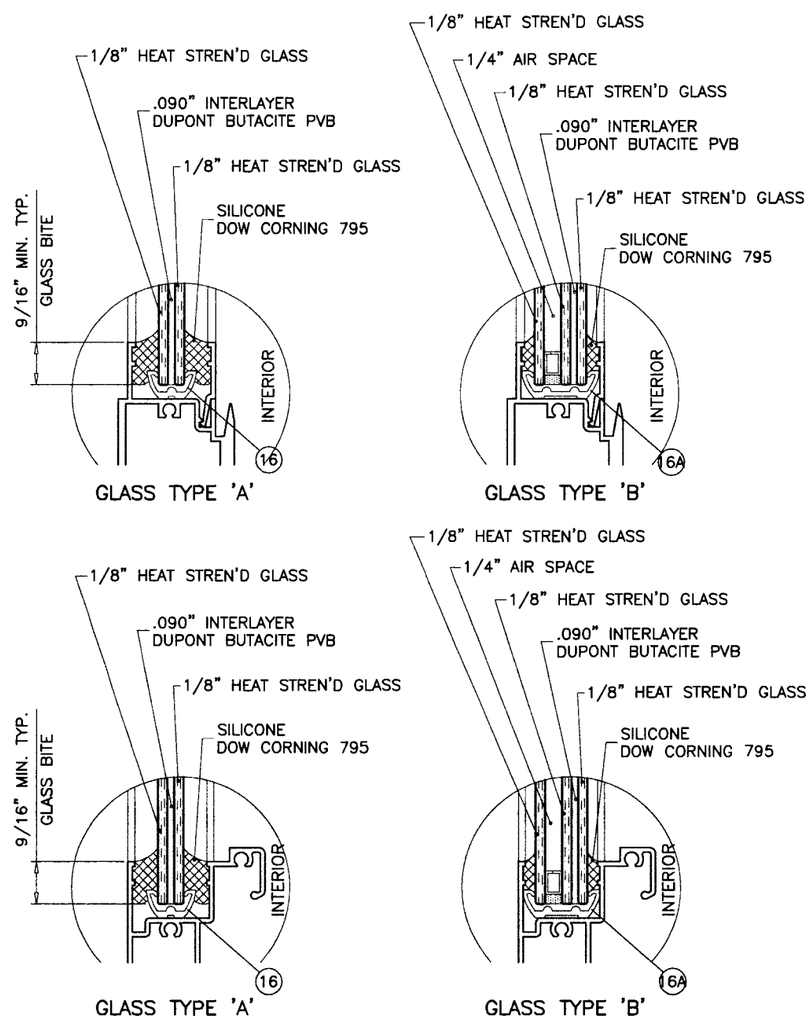


GLAZING OPTIONS

| DESIGN LOAD CAPACITY – PSF | | | |
|---|---|---|---|
| WINDOW DIMS. | | GLASS TYPE 'A' & 'B' | |
| WIDTH | HEIGHT | EXT.(+) | INT.(–) |
| 19-1/8" | 26" (4) | 80.0 | 80.0 |
| 26-1/2" | | 80.0 | 80.0 |
| 37" | | 80.0 | 80.0 |
| 48" | | 80.0 | 80.0 |
| 53-1/8" | | 80.0 | 80.0 |
| 19-1/8" | 38-3/8" (4) | 80.0 | 80.0 |
| 26-1/2" | | 80.0 | 80.0 |
| 37" | | 80.0 | 80.0 |
| 48" | | 80.0 | 80.0 |
| 53-1/8" | | 80.0 | 80.0 |
| 19-1/8" | 50-5/8" (6) | 80.0 | 80.0 |
| 26-1/2" | | 80.0 | 80.0 |
| 37" | | 80.0 | 80.0 |
| 48" | | 80.0 | 80.0 |
| 53-1/8" | | 80.0 | 80.0 |
| 19-1/8" | 58" (6) | 80.0 | 80.0 |
| 26-1/2" | | 80.0 | 80.0 |
| 37" | | 80.0 | 80.0 |
| 48" | | 80.0 | 80.0 |
| 53-1/8" | | 80.0 | 80.0 |
| 19-1/8" | 63" (8) | 80.0 | 80.0 |
| 26-1/2" | | 80.0 | 80.0 |
| 37" | | 80.0 | 80.0 |
| 48" | | 80.0 | 80.0 |
| 53-1/8" | | 80.0 | 80.0 |
| 19-1/8" | 74-1/4" (8) | 80.0 | 80.0 |
| 26-1/2" | | 80.0 | 80.0 |
| 37" | | 80.0 | 80.0 |
| 48" | | 80.0 | 80.0 |
| 53-1/8" | | 80.0 | 80.0 |
| 19-1/8" | 76" (8) | 80.0 | 80.0 |
| 26-1/2" | | 80.0 | 80.0 |
| 37" | | 80.0 | 80.0 |
| 48" | | 80.0 | 80.0 |
| 53-1/8" | | 80.0 | 80.0 |

* NO. IN PARENTHESIS INDICATE NO. OF ANCHORS PER JAMB.

NOTE:
GLASS CAPACITIES ON THIS SHEET ARE BASED ON ASTM E1300-02/04 (3 SEC. GUSTS) AND FLORIDA BUILDING COMMISSION DECLARATORY STATEMENT DCA05-DEC-219

THESE WINDOWS ARE RATED FOR LARGE MISSILE IMPACT. SHUTTERS ARE NOT REQUIRED.

Engr: DR. HUMAYOUN FAROOQ
STRUCTURES
FLA. PE # 16557
C.A.N. 3538

SEP 25 2008

PRODUCT REVISED
as complying with the Florida Building Code
Acceptance No 09-0303.05
Expiration Date JUNE 24, 2014
By Mamed Perez
Miami-Dade Product Control Division


AL-FAROOQ CORPORATION
ENGINEERS & PRODUCT DEVELOPMENT
1235 S.W. 87 AVE
MIAMI, FLORIDA 33174
TEL. (305) 264-8100 FAX. (305) 262-6978
COMP-ANL\W04-19RC


SH100 ALUM SINGLE HUNG WINDOW (L.M.I.)


R.C. ALUMINUM INDUSTRIES INC.
2805 N.W. 75 TH AVE.
MIAMI, FL. 33122
TEL. (305) 592-1515 FAX. (305) 592-2184


revisions:

| no | date | by | description |
|---|---|---|---|
| A | 05.19.04 | | NO CHANGE THIS SHEET |
| B | 09.13.06 | | UPDATED FOR 2004 FBC |
| C | 09.19.08 | | UPDATED FOR 2007 FBC |

date: 03-09-04
scale: 1/2"=1'-0"
dr. by: HAMID
chk. by:

drawing no.
W04-19

sheet 1 of 4

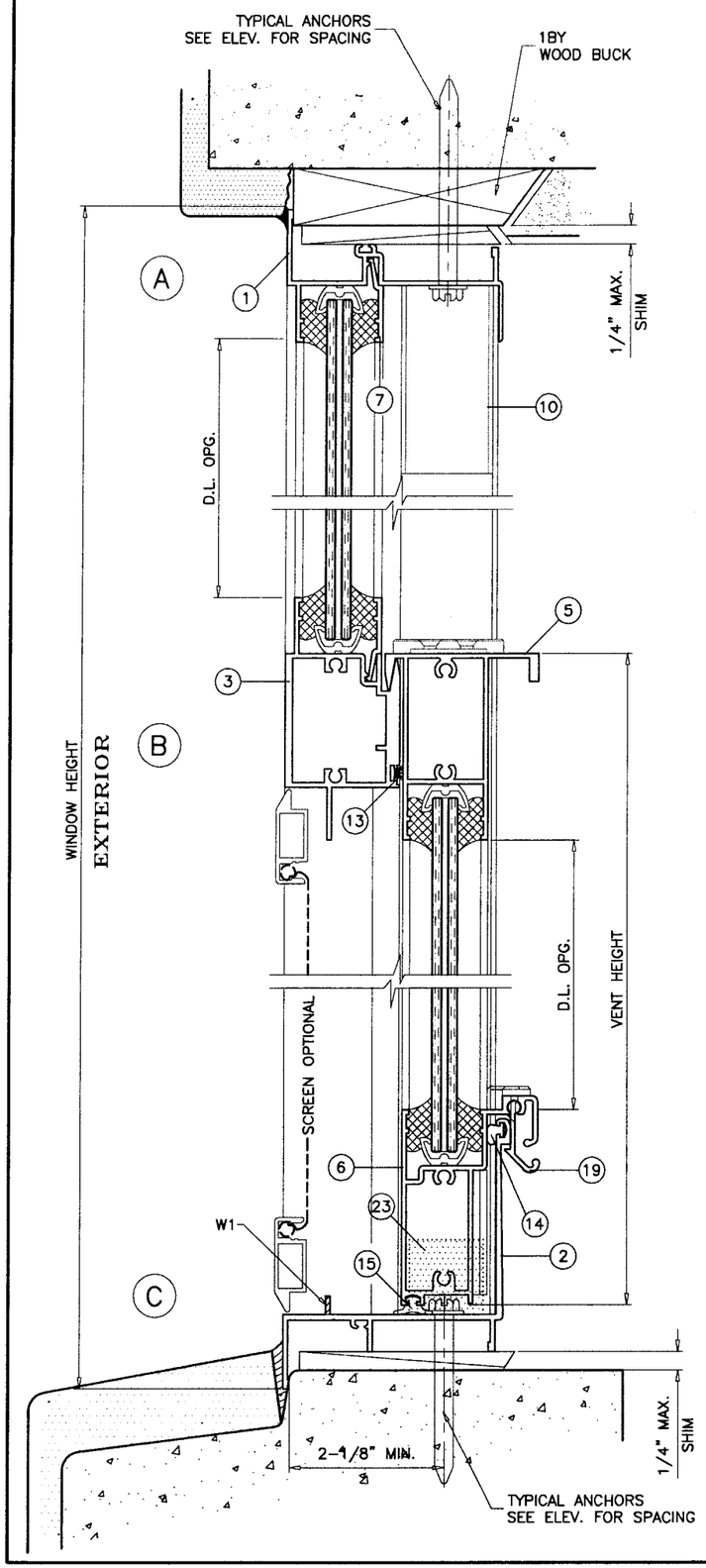


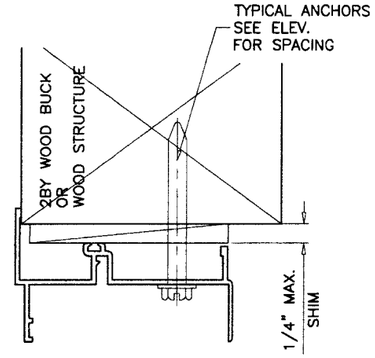


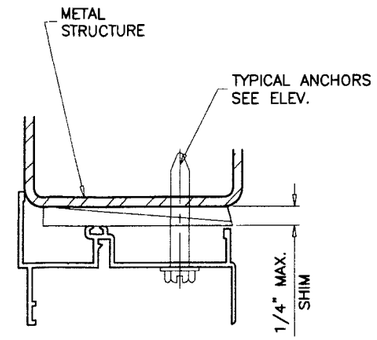


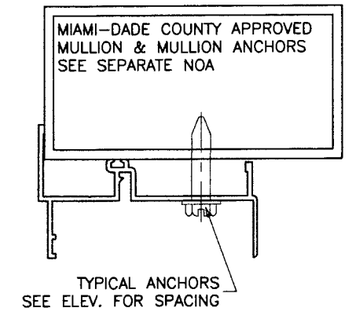


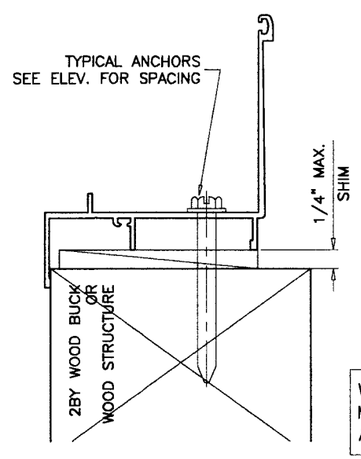


## TYPICAL ANCHORS: SEE ELEV. FOR SPACING

**1/4" HILTI KWIK-CON II**

INTO 2BY WOOD BUCKS OR WOOD STRUCTURES
1-1/2" MIN. PENETRATION INTO WOOD

THRU 1BY BUCKS INTO CONC. OR MASONRY
1-1/4" MIN. EMBED INTO CONC. OR MASONRY

DIRECTLY INTO CONC. OR MASONRY
1-1/4" MIN. EMBED INTO CONC. OR MASONRY

**1/4-20 KWIK-FLEX SELF DRILLING SCREWS BY 'HILTI'**

INTO DADE COUNTY APPROVED MULLIONS (MIN. THK. = .090")
INTO METAL STRUCTURES
STEEL : 12 GA. MIN. (Fy = 36 KSI MIN.)
ALUMINUM : 1/8" THK. MIN. (6063-T5 MIN.)
(STEEL IN CONTACT WITH ALUMINUM TO BE PLATED OR PAINTED)

**ANCHOR EDGE DISTANCES**

INTO CONCRETE AND MASONRY = 2" MIN.
INTO WOOD STRUCTURE = 1" MIN.
INTO METAL STRUCTURE = 1" MIN.

## SEALANT:

ALL FRAME AND VENT CORNERS AND INSTALLATION SCREWS SEALED WITH SILICONE.

## WEEPHOLES:

W1 = 1" WEEP NOTCH AT EACH END

PRODUCT REVISED
as complying with the Florida
Building Code
Acceptance No 09-0303.05
Expiration Date JUNE 24, 2014
By Manuel Perez
Miami Dade Product Control
Division

WOOD BUCKS AND METAL STRUCTURE NOT BY RC ALUMINUM MUST SUSTAIN LOADS IMPOSED BY GLAZING SYSTEM AND TRANSFER THEM TO THE BUILDING STRUCTURE.

Engr: DR. HUMAYOUN FAROOQ
STRUCTURES
FLA. PE # 16557
C.A.N. 3538

SEP 25 2008


AL-FAROOQ CORPORATION
ENGINEERS & PRODUCT DEVELOPMENT
1235 S.W. 87 AVE
MIAMI, FLORIDA 33174
TEL. (305) 264-8100 FAX. (305) 262-6978
COMP-ANL\W04-19RC


SH100 ALUM SINGLE HUNG WINDOW (L.M.I.)


R.C. ALUMINUM INDUSTRIES INC.
2805 N.W. 75 TH AVE.
MIAMI, FL. 33122
TEL. (305) 592-1515 FAX. (305) 592-2184


revisions:

| no | date | by | description |
|---|---|---|---|
| A | 05.19.04 | | REV. PER BCCO COMMENTS |
| B | 09.13.06 | | UPDATED FOR 2004 FBC |
| C | 09.19.08 | | NO CHANGE THIS SHEET |

date: 03-09-04
scale: 1/2" = 1"
dr. by: HAMID
chk. by:

drawing no.
W04-19

| ITEM # | PART # | REQD. | DESCRIPTION | MATERIAL | MANF./SUPPLIER/REMARKS |
|---|---|---|---|---|---|
| 1 | RS100-008 | 1 | FRAME HEAD | 6063-T6 | - |
| 2 | RS100-007 | 1 | FRAME SILL | 6063-T6 | - |
| 3 | RS100-004 | 1 | MEETING RAIL | 6063-T6 | - |
| 4 | RS100-001 | 2 | FRAME JAMB | 6063-T6 | - |
| 5 | RS100-003 | 1 | VENT HEAD | - | - |
| 6 | RS100-006 | 1 | VENT BOTTOM RAIL | 6063-T6 | - |
| 7 | 500Y-007 | AS REQD. | GLAZING BEAD | 6063-T6 | - |
| 9 | RS100-009 | 2 | VENT SIDE RAIL | 6063-T6 | - |
| 10 | CHANNEL | 2 | VENT STOP 1-1/4"x 1-1/4" x 2-1/2" | - | - |
| 12 | W3323INK | 4 | WEATHER STRIPPING PILE (VENT JAMBS) | - | - |
| 13 | W3323INK | 1 | WEATHER STRIPPING PILE (MEETING RAIL) | - | - |
| 14 | Q-LON | 1 | Q-375 X 190 WHITE | - | - |
| 15 | V-033 | 1 | WEATHER STRIPPING GASKET | NEOPRENE | - |
| 16 | V-054 | 1 | VINYL LAM. GLASS | PVC | - |
| 16A | V-055 | 1 | VINYL LAM. INSUL. GLASS | PVC | - |
| 17 | P-020 | 2 | VENT TOP GUIDE | NYLON | ATTACHED W/ #8 X 3/8" FH SMS |
| 18 | P-022 | 2 | VENT BOTTOM GUIDE | NYLON | - |
| 19 | P-023 | 2 | HANDICAP FINGER LOCK | RIGID VINYL | 6" FROM EACH END |
| 22 | #10 X 1" | AS REQD. | FRAME ASSY. SCREWS | ST. STEEL | P.H. PHL. |
| 23 | | 2 | 1" X 1" X 4" LG. FOAM PAD | - | - |
| 24 | | 2 | ULTRA LIFT BALANCE # 23 x 30 LB | - | CADWELL |
| 25 | | 2 | ULTRA LIFT NON TILT BRACKET | - | - |
| 26 | - | OPTIONAL | SCREEN | ALUMINUM | - |

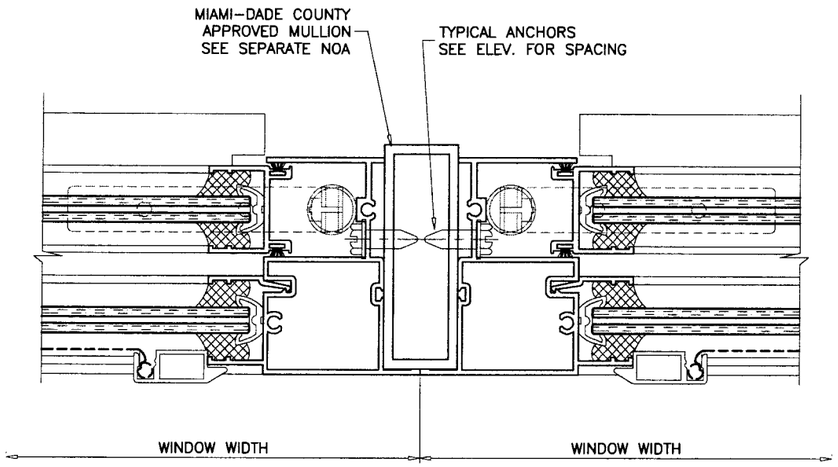


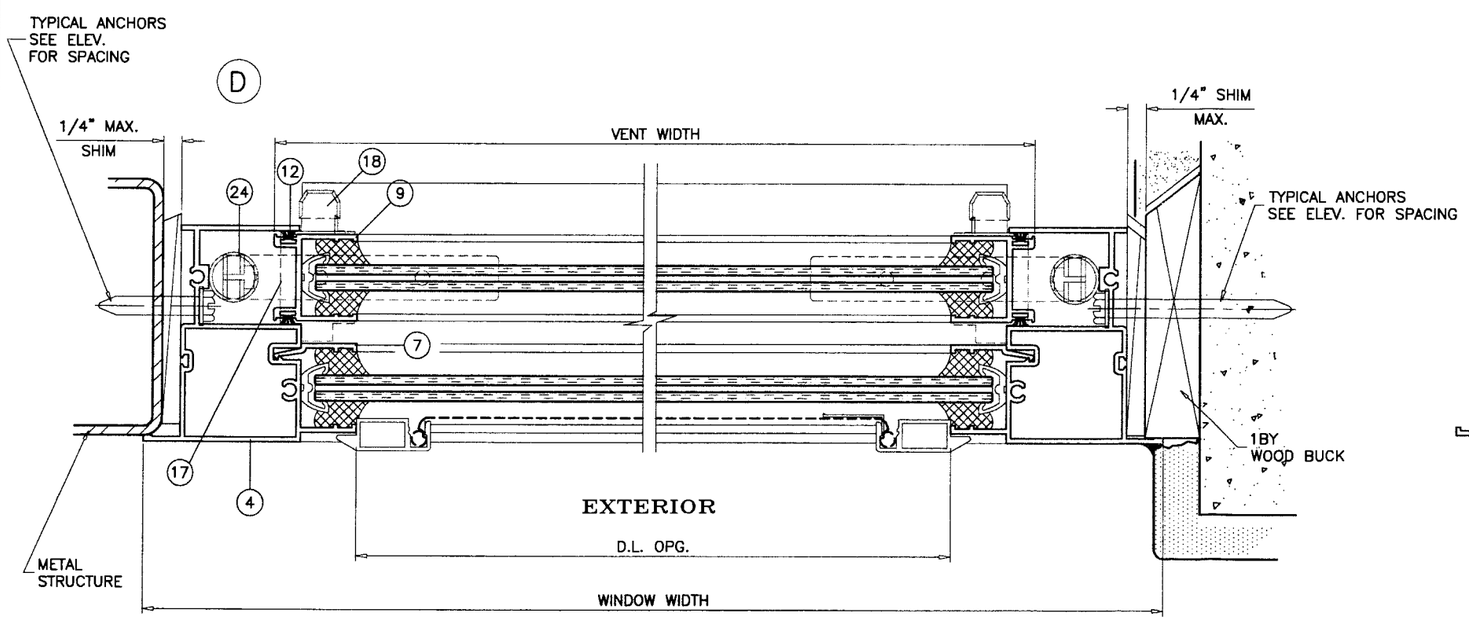


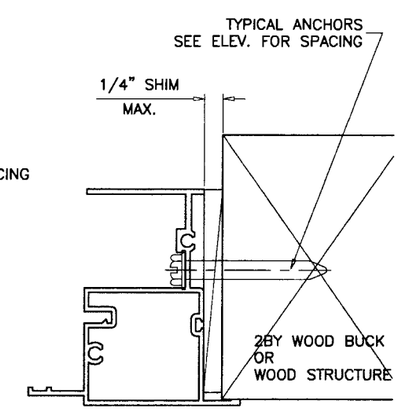


PRODUCT REVISED
as complying with the Florida
Building Code
Acceptance No 09-0303.05
Expiration Date JUNE 24,2014
By Manuel Perez
Miami Dade Product Control
Division

Engr: DR. HUMAYOUN FAROOQ
STRUCTURES
FLA. PE # 16557
C.A.N. 3538

SEP 25 2008


AL-FAROOQ CORPORATION
ENGINEERS & PRODUCT DEVELOPMENT
1235 S.W. 87 AVE
MIAMI, FLORIDA 33174
TEL. (305) 264-8100 FAX. (305) 262-6978
COMP-ANL\W04-19RC


SH100 ALUM SINGLE HUNG WINDOW (L.M.I.)


R.C. ALUMINUM INDUSTRIES INC.
2805 N.W. 75 TH AVE.
MIAMI, FL. 33122
TEL. (305) 592-1515 FAX. (305) 592-2184


revisions:

| no | date | by | description |
|---|---|---|---|
| A | 05.19.04 | | NO CHANGE THIS SHEET |
| B | 09.13.06 | | UPDATED FOR 2004 FBC |
| C | 09.19.08 | | NO CHANGE THIS SHEET |

date: 03-09-04
scale: 1/2" = 1"
dr. by: HAMID
chk. by:

drawing no.
W04-19

sheet 3 of 4

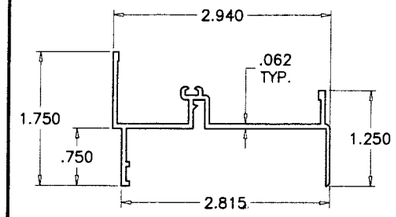


FRAME HEAD

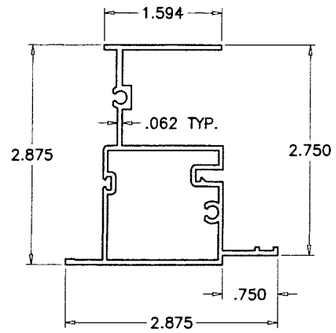


FRAME JAMB

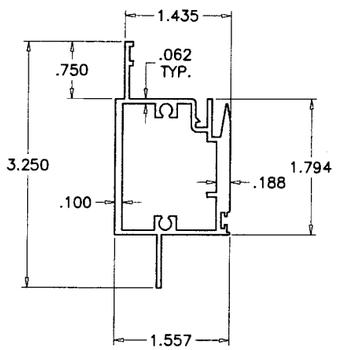


MEETING RAIL

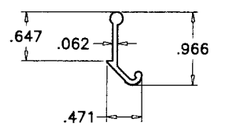


VENT LATCH

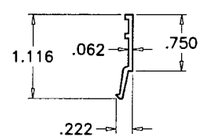


GLAZING BEAD

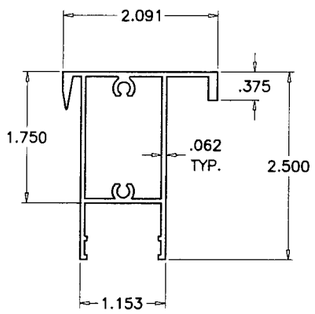


VENT TOP RAIL

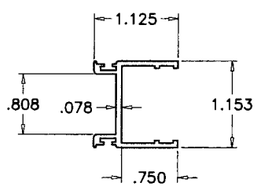


VENT SIDE RAIL

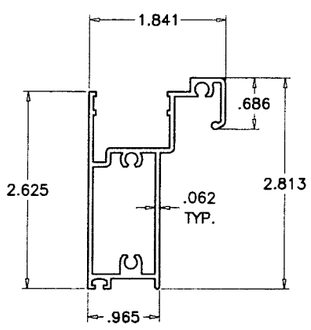


VENT BOTTOM RAIL

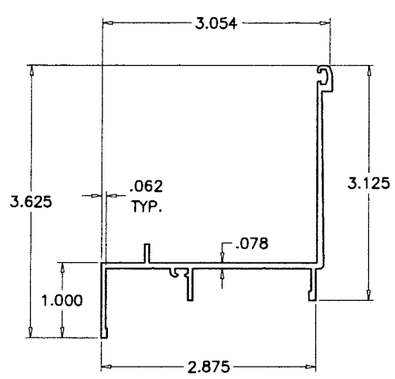


FRAME SILL

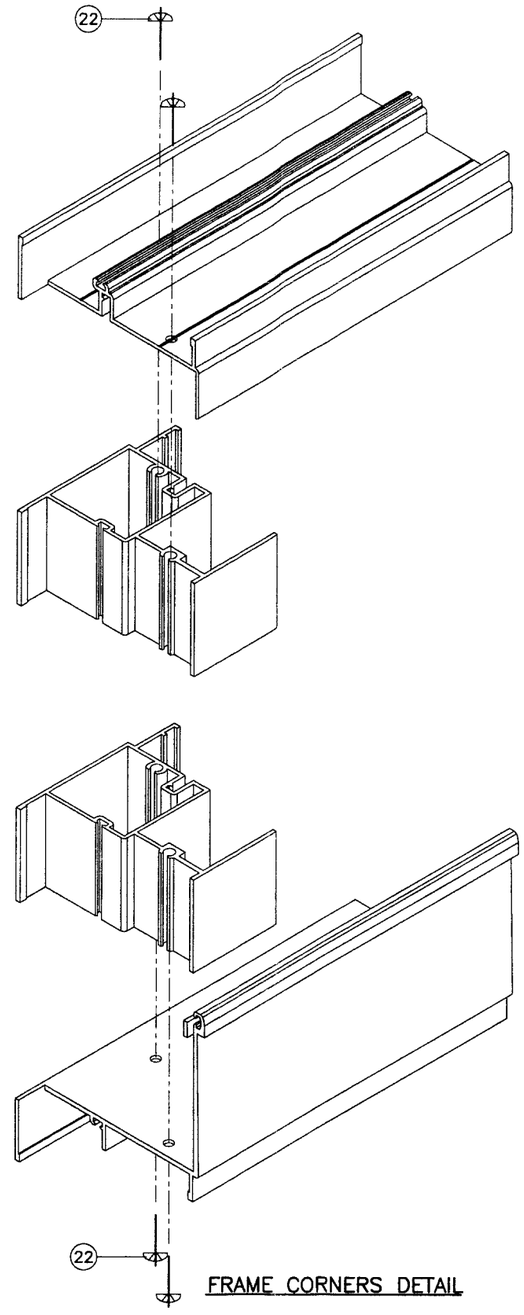


FRAME CORNERS DETAIL

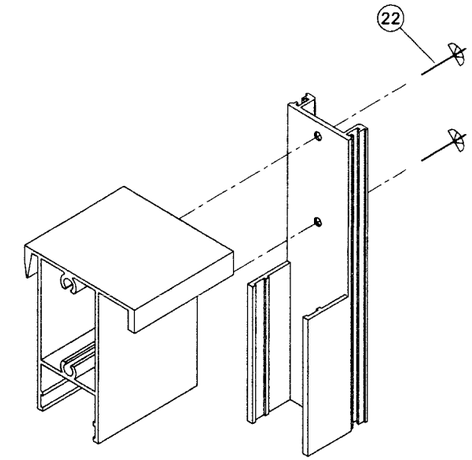


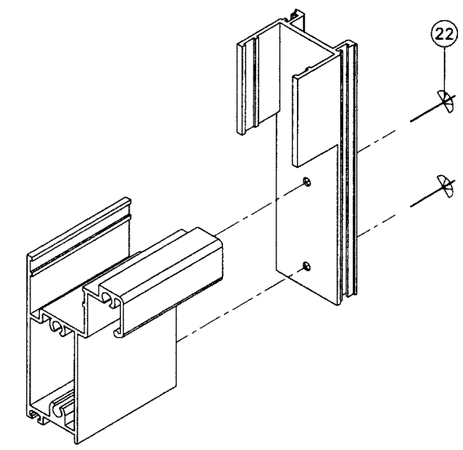


VENT CORNER DETAIL

PRODUCT REVISED
as complying with the Florida
Building Code
Acceptance No 09-0303.05
Expiration Date JUNE 24, 2014
By Manuel Cruz
Miami Dade Product Control
Division

Engr: DR. HUMAYOUN FAROOQ
STRUCTURES
FLA. PE # 16557
C.A.N. 3538

SEP 25 2008

**AL-FAROOQ CORPORATION**
ENGINEERS & PRODUCT DEVELOPMENT
1235 S.W. 87 AVE
MIAMI, FLORIDA 33174
TEL. (305) 264-8100 FAX. (305) 262-6978

COMP-ANL\W04-19RC

SH100 ALUM SINGLE HUNG WINDOW (L.M.I.)

**R.C. ALUMINUM INDUSTRIES INC.**
2805 N.W. 75 TH AVE.
MIAMI, FL. 33122
TEL. (305) 592-1515 FAX. (305) 592-2184

revisions:

| no | date | by | description |
|---|---|---|---|
| A | 05.19.04 | | NO CHANGE THIS SHEET |
| B | 09.13.06 | | UPDATED FOR 2004 FBC |
| C | 09.19.08 | | NO CHANGE THIS SHEET |

date: 03-09-04
scale: 1/2" = 1"
dr. by: HAMID
chk. by:

drawing no.
W04-19

sheet 4 of 4