MIAMI-DADE COUNTY
BUILDING CODE COMPLIANCE OFFICE (BCCO)
PRODUCT CONTROL DIVISION

MIAMI-DADE COUNTY, FLORIDA
METRO-DADE FLAGLER BUILDING
140 WEST FLAGLER STREET, SUITE 1603
MIAMI, FLORIDA 33130-1563
(305) 375-2901 FAX (305) 372-6339
www.miamidade.gov/buildingcode

NOTICE OF ACCEPTANCE (NOA)

BASF Construction Chemicals, LLC.
3550 St. Johns Bluff Rd. South
Jacksonville, FL 32224

SCOPE:

This NOA is being issued under the applicable rules and regulations governing the use of construction materials. The documentation submitted has been reviewed by Miami-Dade County Product Control Division and accepted by the Board of Rules and Appeals (BORA) to be used in Miami Dade County and other areas where allowed by the Authority Having Jurisdiction (AHJ).

This NOA shall not be valid after the expiration date stated below. The Miami-Dade County Product Control Division (In Miami Dade County) and/or the AHJ (in areas other than Miami Dade County) reserve the right to have this product or material tested for quality assurance purposes. If this product or material fails to perform in the accepted manner, the manufacturer will incur the expense of such testing and the AHJ may immediately revoke, modify, or suspend the use of such product or material within their jurisdiction. BORA reserves the right to revoke this acceptance, if it is determined by Miami-Dade County Product Control Division that this product or material fails to meet the requirements of the applicable building code.

This product is approved as described herein, and has been designed to comply with the Florida Building Code, including the High Velocity Hurricane Zone.

DESCRIPTION: Acrocrete Acrowall-ES EIF System – S.M.I.

APPROVAL DOCUMENT: Drawing titled "Acrocrete Assembly Detail for Acrowall-ES Wall System over Dens Glass Gold or GlasRoc Sheathing and 18/20ga Steel Frame", sheets 1 through 4 of 4, dated 03/07/08, prepared by BASF Construction Chemicals, LLC, signed and sealed by R. E. Kroll, P.E., bearing the Miami-Dade County Product Control approval stamp with the Notice of Acceptance number and approval date by the Miami-Dade County Product Control Division.

MISSILE IMPACT RATING: Small Missile Impact Resistant

LABELING: Each unit shall bear a permanent label with the manufacturer's name or logo, city, state and following statement: "Miami-Dade County Product Control Approved", unless otherwise noted herein.

RENEWAL of this NOA shall be considered after a renewal application has been filed and there has been no change in the applicable building code negatively affecting the performance of this product.

TERMINATION of this NOA will occur after the expiration date or if there has been a revision or change in the materials, use, and/or manufacture of the product or process. Misuse of this NOA as an endorsement of any product, for sales, advertising or any other purposes shall automatically terminate this NOA. Failure to comply with any section of this NOA shall be cause for termination and removal of NOA.

ADVERTISEMENT: The NOA number preceded by the words Miami-Dade County, Florida, and followed by the expiration date may be displayed in advertising literature. If any portion of the NOA is displayed, then it shall be done in its entirety.

INSPECTION: A copy of this entire NOA shall be provided to the user by the manufacturer or its distributors and shall be available for inspection at the job site at the request of the Building Official.

This NOA consists of this page 1 and evidence page E-1, as well as approval document mentioned above.

The submitted documentation was reviewed by **Carlos M. Utrera, P.E.**

MIAMI-DADE COUNTY APPROVED

4/7/09

NOTICE OF ACCEPTANCE: EVIDENCE SUBMITTED

A. DRAWINGS

1. Drawing titled "Acrocrete Assembly Detail for Acrowall-ES Wall System over Dens Glass Gold or GlasRoc Sheathing and 18/20ga Steel Frame", sheets 1 through 4 of 4, dated 03/07/08, prepared by BASF Construction Chemicals, LLC, signed and sealed by R. E. Kroll, P.E.

B. TESTS

1. Test reports on 1) Air Infiltration Test, per FBC, TAS 202-94
   2) Uniform Static Air Pressure Test, Loading per FBC TAS 202-94
   3) Water Resistance Test, per FBC, TAS 202-94
   4) Small Missile Impact Test per FBC, TAS 201-94
   5) Cyclic Wind Pressure Loading per FBC, TAS 203-94

   along with marked-up drawings and installation diagram of Acrocrete Acrowall-ES Wall (EIFS) System, prepared by Hurricane Test Laboratory, LLC, Test Report No. **0469-0711-07** and **0469-0104-08**, dated 09/12/08, signed and sealed by Vinu J. Abraham, P.E.

C. CALCULATIONS

1. None.

D. QUALITY ASSURANCE

1. Miami Dade Building Code Compliance Office (BCCO).

E. MATERIAL CERTIFICATIONS

1. Notice of Acceptance No. **06-1004.06**, issued to Dyplast Products LLC., for their EPS Block Type Insulation, approved on 11/09/06, and expiring on 12/20/11.

F. STATEMENTS

1. Laboratory compliance letter for Test Report No. **0469-0711-07** and **0469-0104-08**, issued by Hurricane Test Laboratory, LLC, dated 09/12/08, signed and sealed by Vinu J. Abraham, P.E.

4/7/09

Carlos M. Utrera, P.E.
Product Control Examiner
NOA No. 09-0303.11
Expiration Date: April 29, 2014
Approval Date: April 29, 2009

ACROCRETE

DATE: 3/7/08 | Page 1 of 4

Assembly Detail for Acrowall-ES Wall System over Dens Glass Gold or GlasRoc Sheathing and 18ga Steel Frame (Small Missile)

REVISIONS DATES

FLORIDA P.E.: R.E. KROLL
REGISTRATION NO.: 38477

R E Kroll
12/10/08

FOR OFFICE USE

BASF Construction Chemicals LLC
3550 St Johns Bluff Rd South
Jacksonville, FL 32224
800-221-9255

APPLICATION NOTES

1) ACROCRETE BASE COAT IS MIXED AT THE TIME OF USE WITH PORTLAND CEMENT (1 TO 1 BY WEIGHT) AND WATER WITH PADDLE AND DRILL TO A HOMOGENEOUS CONSISTENCY.
2) ACROCRETE BASE COAT IS APPLIED TO THE BACK OF THE EPS INSULATION BOARD USING A 3/8" X 3/8" U NOTCHED TROWEL HAVING 3/8" FLAT SEGMENTS BETWEEN NOTCHES.
3) MIAMI-DADE COUNTY APPROVED EPS INSULATION HAS A DENSITY OF 1 PCF AND IT SHALL BE APPLIED HORIZONTALLY IN A RUNNING BOND PATTERN STAGGERING VERTICAL JOINTS AND CORNERS.
4) AFTER BASE COAT IS DRIED AND INSULATION BOARD IS RASPED TO A SMOOTH SURFACE, A LAYER OF ACROCRETE BASE COAT IS APPLIED TO THE EXPOSED SURFACE. ACROMESH 4 REINFORCING MESH IS EMBEDDED IN THE WET BASE COAT BY TROWELING FROM THE CENTER OUT. ALL EDGES ARE LAPPED 2 1/2 INCHES.
5) ACROCRETE FINISH IS AN ACRYLIC BASED TEXTURED EXTERIOR COATING READY MIXED FROM THE FACTORY. IT IS APPLIED WITH A STAINLESS STEEL TROWEL AND FLOATED TO A DESIRED TEXTURE.

GENERAL NOTES

1) THIS SYSTEM HAS BEEN DESIGNED IN ACCORDANCE WITH THE FLORIDA BUILDING CODE 2007 EDITION AND ITS LATEST SUPPLEMENTS.

2) THIS SYSTEM HAS BEEN TESTED IN ACCORDANCE WITH MIAMI-DADE COUNTY PROTOCOL TAS-201, TAS-202 & TAS-203 FOR SMALL MISSILE IMPACT, STRUCTURAL AND CYCLIC TESTING.

3) THIS SYSTEM SHALL BE APPLIED BY A LICENSED PLASTERING CONTRACTOR FOLLOWING THIS NOTICE OF ACCEPTANCE, THE RECOMMENDATIONS OF ACROCRETE AND THE APPLICABLE SECTION OF THE FLORIDA BUILDING CODE.

4) THE ENGINEER AND/OR ARCHITECT OF RECORD FOR EACH PROJECT USING THIS SYSTEM SHALL SIZE ALL STUD FRAMING TO ENSURE CONFORMANCE WITH STUD DEFLECTION AND STRESS LIMITATIONS AS REQUIRED BY GOVERNING CODE AND THIS DOCUMENT.

5) ALL STUDS USED WITH THIS SYSTEM SHALL BE COMPLETELY SHEATHED AT THE INTERIOR FLANGE OR BRIDGED AT MAXIMUM EVERY 5 FT. OF STUD LENGTH OR AS SPECIFIED BY THE MANUFACTURER.

6) ALL STEEL STUDS SHALL BE STRUCTURAL WITH 1 5/8" MIN FLANGE WIDTH AND HAVE A MINIMUM YIELD STRENGTH OF 33000 PSI

7) DETAILS ON SHEET 3 & 4 OF 4 ARE TYPICAL AND SHOW INTENT TO PREVENT WATER INFILTRATION INTO AND BEHIND THE SYSTEM. ALTERNATE DETAILS AND SPECIFIC CONDITIONS NOT COVERED BY THE TYPICAL DETAILS ARE THE RESPONSIBILITY OF THE LICENSED DESIGN PROFESSIONAL IN CONSULTATION WITH ACROCRETE.

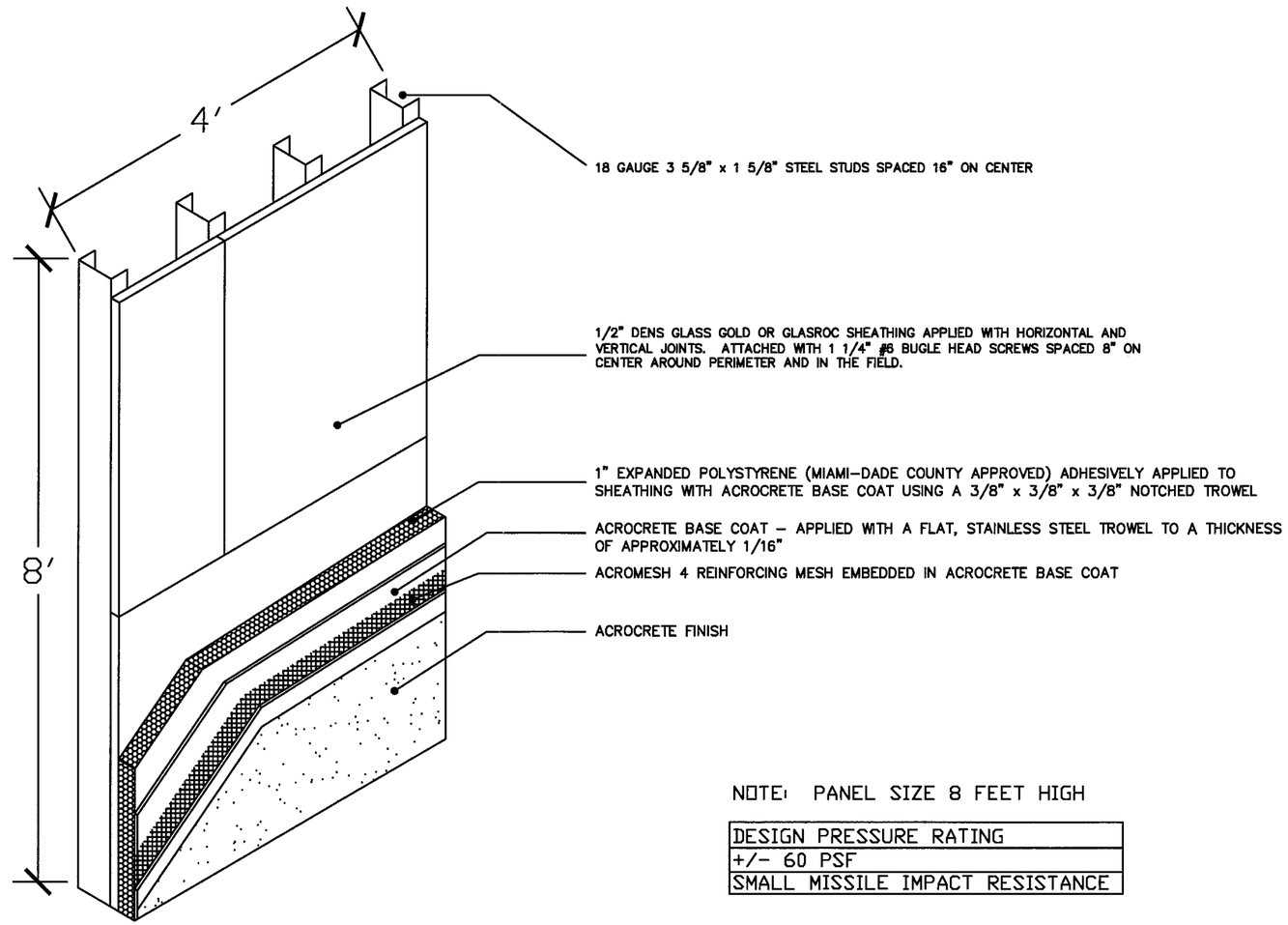

NOTE: PANEL SIZE 8 FEET HIGH

DESIGN PRESSURE RATING
+/- 60 PSF
SMALL MISSILE IMPACT RESISTANCE

Approved as complying with the Florida Building Code
Date 04/29/2009
NOA# 09-0303.11
Miami Dade Product Control Division
By

ACROCRETE

DATE: 3/7/08 | Page 2 of 4

Assembly Detail for Acrowall-ES Wall System over Dens Glass Gold or GlasRoc Sheathing and 20ga Steel Frame (Small Missile)

REVISIONS DATES

FLORIDA P.E.: R.E. KROLL
REGISTRATION NO.: 38477

R. Kroll
12/10/08

FOR OFFICE USE

BASF Construction Chemicals LLC
3550 St Johns Bluff Rd South
Jacksonville, FL 32224
800-221-9255

APPLICATION NOTES

1) ACROCRETE BASE COAT IS MIXED AT THE TIME OF USE WITH PORTLAND CEMENT (1 TO 1 BY WEIGHT) AND WATER WITH PADDLE AND DRILL TO A HOMOGENEOUS CONSISTENCY.

2) ACROCRETE BASE COAT IS APPLIED TO THE BACK OF THE EPS INSULATION BOARD USING A 3/8" X 3/8" U NOTCHED TROWEL HAVING 3/8" FLAT SEGMENTS BETWEEN NOTCHES.

3) MIAMI-DADE COUNTY APPROVED EPS INSULATION HAS A DENSITY OF 1 PCF AND IT SHALL BE APPLIED HORIZONTALLY IN A RUNNING BOND PATTERN STAGGERING VERTICAL JOINTS AND CORNERS.

4) AFTER BASE COAT IS DRIED AND INSULATION BOARD IS RASPED TO A SMOOTH SURFACE, A LAYER OF ACROCRETE BASE COAT IS APPLIED TO THE EXPOSED SURFACE. ACROMESH 4 REINFORCING MESH IS EMBEDDED IN THE WET BASE COAT BY TROWELING FROM THE CENTER OUT. ALL EDGES ARE LAPPED 2 1/2 INCHES.

5) ACROCRETE FINISH IS AN ACRYLIC BASED TEXTURED EXTERIOR COATING READY MIXED FROM THE FACTORY. IT IS APPLIED WITH A STAINLESS STEEL TROWEL AND FLOATED TO A DESIRED TEXTURE.

GENERAL NOTES

1) THIS SYSTEM HAS BEEN DESIGNED IN ACCORDANCE WITH THE FLORIDA BUILDING CODE 2007 EDITION AND ITS LATEST SUPPLEMENTS.

2) THIS SYSTEM HAS BEEN TESTED IN ACCORDANCE WITH MIAMI-DADE COUNTY PROTOCOL TAS-201, TAS-202 & TAS-203 FOR SMALL MISSILE IMPACT, STRUCTURAL AND CYCLIC TESTING.

3) THIS SYSTEM SHALL BE APPLIED BY A LICENSED PLASTERING CONTRACTOR FOLLOWING THIS NOTICE OF ACCEPTANCE, THE RECOMMENDATIONS OF ACROCRETE AND THE APPLICABLE SECTION OF THE FLORIDA BUILDING CODE.

4) THE ENGINEER AND/OR ARCHITECT OF RECORD FOR EACH PROJECT USING THIS SYSTEM SHALL SIZE ALL STUD FRAMING TO ENSURE CONFORMANCE WITH STUD DEFLECTION AND STRESS LIMITATIONS AS REQUIRED BY GOVERNING CODE AND THIS DOCUMENT.

5) ALL STUDS USED WITH THIS SYSTEM SHALL BE COMPLETELY SHEATHED AT THE INTERIOR FLANGE OR BRIDGED AT MAXIMUM EVERY 5 FT. OF STUD LENGTH OR AS SPECIFIED BY THE MANUFACTURER.

6) ALL STEEL STUDS SHALL BE STRUCTURAL WITH 1 5/8" MIN FLANGE WIDTH AND HAVE A MINIMUM YIELD STRENGTH OF 33000 PSI

7) DETAILS ON SHEET 3 & 4 OF 4 ARE TYPICAL AND SHOW INTENT TO PREVENT WATER INFILTRATION INTO AND BEHIND THE SYSTEM. ALTERNATE DETAILS AND SPECIFIC CONDITIONS NOT COVERED BY THE TYPICAL DETAILS ARE THE RESPONSIBILITY OF THE LICENSED DESIGN PROFESSIONAL IN CONSULTATION WITH ACROCRETE.

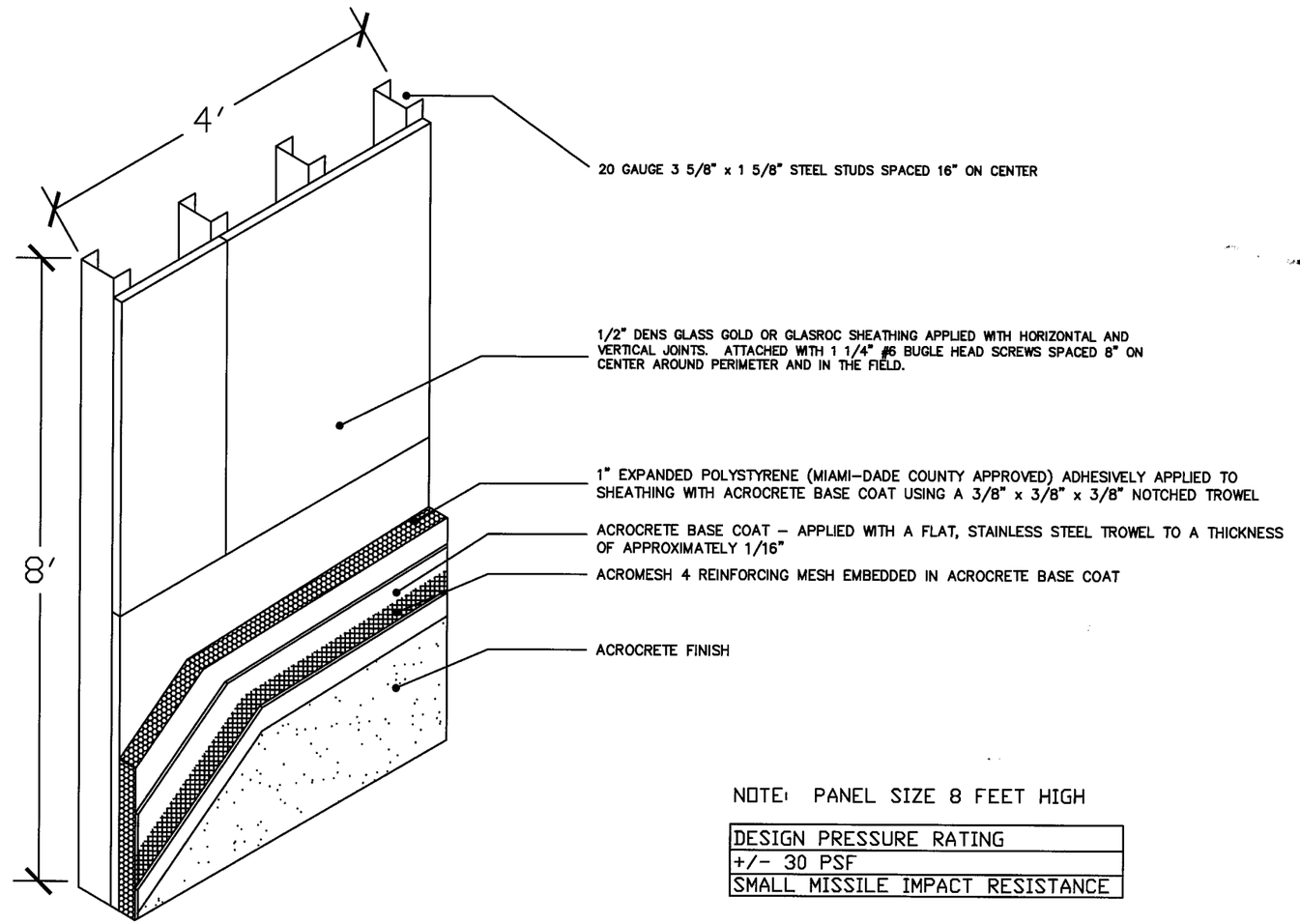

NOTE: PANEL SIZE 8 FEET HIGH

DESIGN PRESSURE RATING
+/- 30 PSF
SMALL MISSILE IMPACT RESISTANCE

Approved as complying with the Florida Building Code
Date 04/29/2009
NOA# 09-0303.11
Miami Dade Product Control Division
By

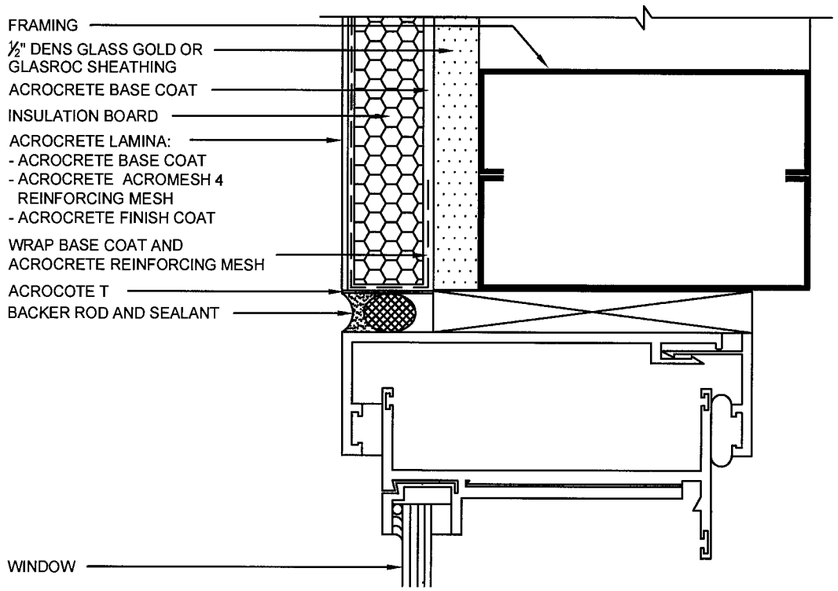

WINDOW JAMB DETAIL (FLUSH)

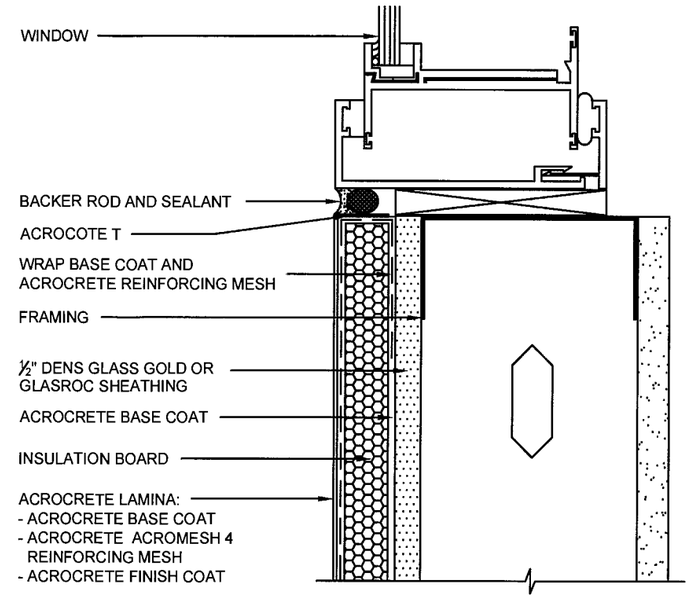

WINDOW SILL DETAIL (FLUSH)

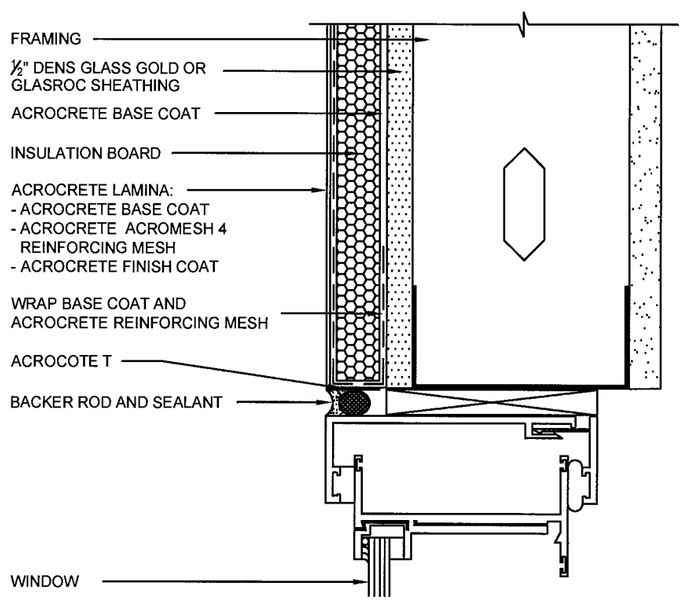

WINDOW HEAD (FLUSH)

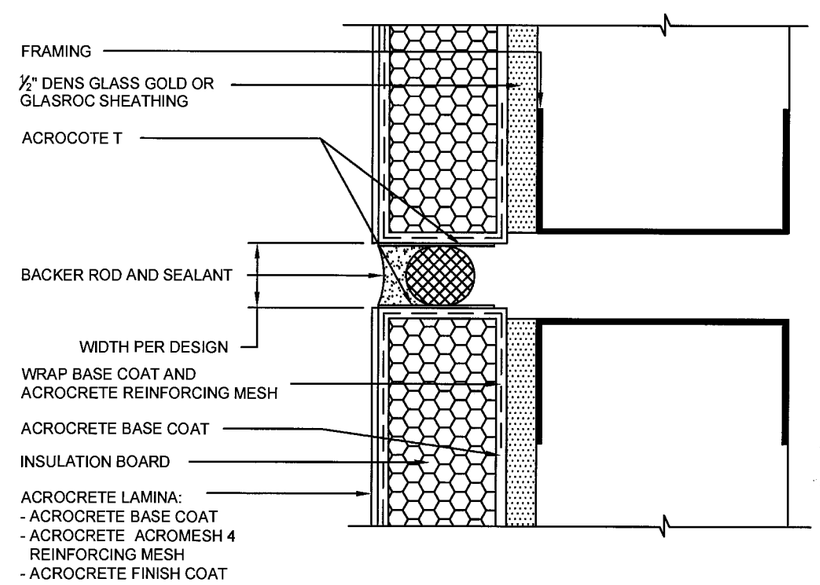

EXPANSION JOINT DETAIL

NOTE: ACROCOTE T IS APPLIED TO ACROCRETE BASE COAT IN SEALANT JOINTS PRIOR TO APPLICATION OF SEALANT SYSTEM

ACROCRETE

DATE: 3/7/08 | Page 3 of 4

Details for Acrowall-ES Wall System over Dens Glass Gold or GlasRoc Sheathing and 18ga or 20ga Steel Frame (Small Missile)

REVISIONS DATES

FLORIDA P.E.: R.E. KROLL
REGISTRATION NO.: 38477

12/10/08

FOR OFFICE USE

Approved as complying with the Florida Building Code
Date 04/29/2009
NOA# 07-0303.11
Miami Dade Product Control Division
By

BASF Construction Chemicals LLC
3550 St Johns Bluff Rd South
Jacksonville, FL 32224
800-221-9255

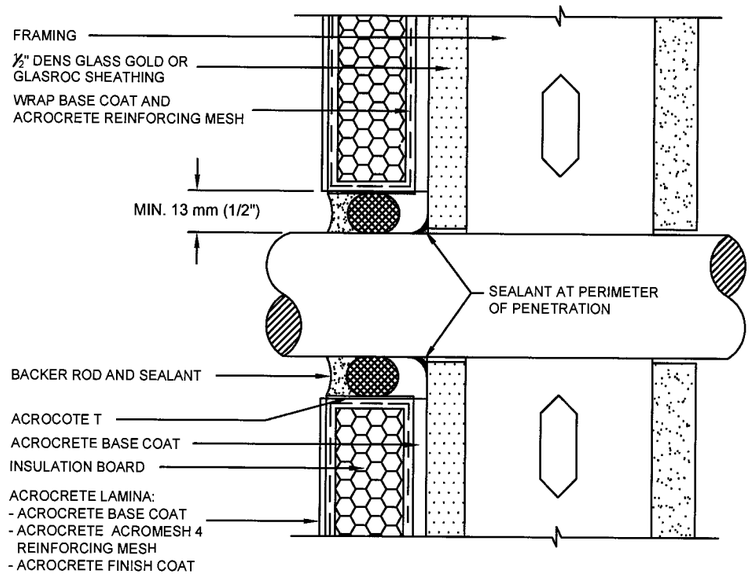

PIPE PENETRATION

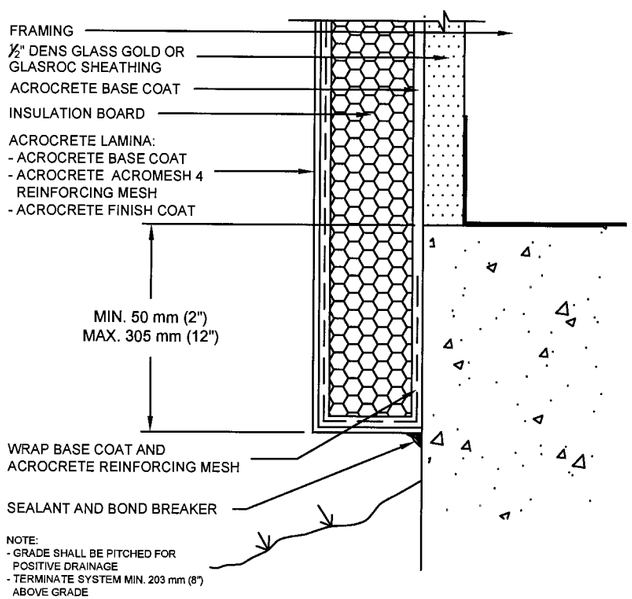

TERMINATION AT FOUNDATION

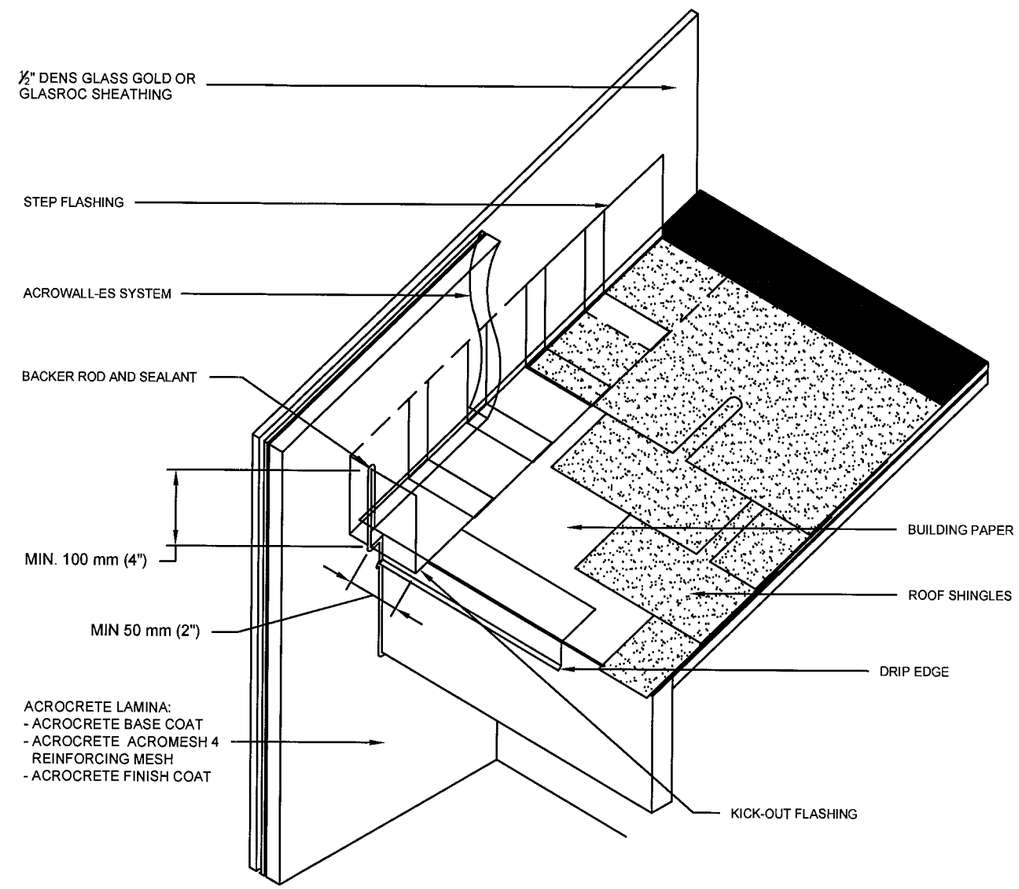

NOTE:
- KICK-OUT FLASHING MUST BE ANGLED 100° MIN. TO ALLOW FOR PROPER DRAINAGE.
- KICK-OUT FLASHING SEAMS MUST BE SOLDERED OR SEALED WITH APPROPRIATE SEALANT.
- TERMINATE ACROWALL-ES SYSTEM MIN. 50 mm (2") ABOVE ROOF.
- ROOFING DETAIL SHALL COMPLY WITH CHAPTER 15 OF THE F.B.C.

KICK-OUT FLASHING DETAIL

Approved as complying with the Florida Building Code
Date 04/29/2009
NOA# 09-0303.11
Miami Dade Product Control Division
By

NOTE: ACROCOTE T IS APPLIED TO ACROCRETE BASE COAT IN SEALANT JOINTS PRIOR TO APPLICATION OF SEALANT SYSTEM

ACROCRETE

DATE: 3/7/08 | Page 4 of 4

Details for Acrowall-ES Wall System over Dens Glass Gold or GlasRoc Sheathing and 18ga or 20ga Steel Frame (Small Missile)

REVISIONS DATES

FLORIDA P.E.: R.E. KROLL
REGISTRATION NO.: 38477

12/10/08

FOR OFFICE USE

BASF Construction Chemicals LLC
3550 St Johns Bluff Rd South
Jacksonville, FL 32224
800-221-9255