MIAMI-DADE COUNTY
BUILDING CODE COMPLIANCE OFFICE (BCCO)
PRODUCT CONTROL DIVISION

MIAMI-DADE COUNTY, FLORIDA
METRO-DADE FLAGLER BUILDING
140 WEST FLAGLER STREET, SUITE 1603
MIAMI, FLORIDA 33130-1563
(305) 375-2901 FAX (305) 372-6339
www.miamidade.gov/buildingcode

NOTICE OF ACCEPTANCE (NOA)

Greenheck Fan Corporation
P.O. Box 410
Schofield, WI 54476

SCOPE:

This NOA is being issued under the applicable rules and regulations governing the use of construction materials. The documentation submitted has been reviewed by Miami-Dade County Product Control Division and accepted by the Board of Rules and Appeals (BORA) to be used in Miami Dade County and other areas where allowed by the Authority Having Jurisdiction (AHJ).

This NOA shall not be valid after the expiration date stated below. The Miami-Dade County Product Control Division (In Miami Dade County) and/or the AHJ (in areas other than Miami Dade County) reserve the right to have this product or material tested for quality assurance purposes. If this product or material fails to perform in the accepted manner, the manufacturer will incur the expense of such testing and the AHJ may immediately revoke, modify, or suspend the use of such product or material within their jurisdiction. BORA reserves the right to revoke this acceptance, if it is determined by Miami-Dade County Product Control Division that this product or material fails to meet the requirements of the applicable building code.

This product is approved as described herein, and has been designed to comply with the Florida Building Code, including the High Velocity Hurricane Zone.

DESCRIPTION: Models SWB, SFB and SFD Steel Roof Fans

APPROVAL DOCUMENT: Drawing No. **HUF1001-1007**, titled "SWB-106-224, SFD-6-10 and SFB-9-25", sheets 1 through 7 of 7, dated 12/08, 12/10 and 12/22/08, with revision 0 and 1 dated 02/10/09, prepared by Greenheck Fan Corporation, signed and sealed by L. David Rice, P.E., bearing the Miami-Dade County Product Control Approval stamp with the Notice of Acceptance number and approval date by the Miami-Dade County Product Control Division.

MISSILE IMPACT RATING: Large and Small Missile Impact Resistant

LABELING: Each unit shall bear a permanent label with the manufacturer's name or logo, city, state and following statement: "Miami-Dade County Product Control Approved", unless otherwise noted herein.

RENEWAL of this NOA shall be considered after a renewal application has been filed and there has been no change in the applicable building code negatively affecting the performance of this product.

TERMINATION of this NOA will occur after the expiration date or if there has been a revision or change in the materials, use, and/or manufacture of the product or process. Misuse of this NOA as an endorsement of any product, for sales, advertising or any other purposes shall automatically terminate this NOA. Failure to comply with any section of this NOA shall be cause for termination and removal of NOA.

ADVERTISEMENT: The NOA number preceded by the words Miami-Dade County, Florida, and followed by the expiration date may be displayed in advertising literature. If any portion of the NOA is displayed, then it shall be done in its entirety.

INSPECTION: A copy of this entire NOA shall be provided to the user by the manufacturer or its distributors and shall be available for inspection at the job site at the request of the Building Official.

This NOA consists of this page 1 and evidence page E-1, as well as approval document mentioned above.

The submitted documentation was reviewed by **Carlos M. Utrera, P.E.**

MIAMI-DADE COUNTY APPROVED

4/25/09

NOTICE OF ACCEPTANCE: EVIDENCE SUBMITTED

A. DRAWINGS

1. Drawing No. **HUF1001-1007**, titled "SWB-106-224, SFD-6-10 and SFB-9-25", sheets 1 through 7 of 7, dated 12/08, 12/10 and 12/22/08, with revision 0 and 1 dated 02/10/09, prepared by Greenheck Fan Corporation, signed and sealed by L. David Rice, P.E.

B. TESTS

1. Test reports on 1) Uniform Static Air Pressure Test, Loading per FBC TAS 202-94
   2) Large Missile Impact Test per FBC, TAS 201-94
   3) Cyclic Wind Pressure Loading per FBC, TAS 203-94

   along with marked-up drawings and installation diagram of Series/Model SWB-224 Belt Drive, roof top ventilating fans, prepared by Architectural Testing, Inc., Test Report No. **88030.01-602-18**, dated 02/04/09, signed and sealed by Joseph A. Reed, P.E.

C. CALCULATIONS

1. Anchor verification calculations, prepared by Rice Engineering, dated 04/07/09, signed and sealed by L. David Rice, P.E.

D. QUALITY ASSURANCE

1. Miami Dade Building Code Compliance Office (BCCO).

E. MATERIAL CERTIFICATIONS

1. None.

F. STATEMENTS

1. Statement letter of code conformance issued by Rice Engineering, dated 02/19/09, signed and sealed by L. David Rice, P.E.
2. Statement letter of no financial interest issued by Rice Engineering, dated 02/18/09, signed and sealed by L. David Rice, P.E.
3. Laboratory compliance letter issued by Architectural Testing, Inc., for Test Reports No. **88030.01-602-18**, dated 02/06/09, signed and sealed by Joseph A. Reed, P.E.

4/25/09

Carlos M. Utrera, P.E.
Product Control Examiner
NOA No. 09-0303.31
Expiration Date: May 13, 2014
Approval Date: May 13, 2009

REVISION	BCR	BY	DATE	SYM
CREATED HURRICANE RATED DWG.		DFY	02/10 2009	0

RICE ENGINEERING

105 School Creek Trail
Luxemburg, WI 54217
Phone: 920.845.1042
Fax: 920.845.1048
www.rice-inc.com

Florida Firm No: F-01000005061
Certificate of Authorization: #9090
L. David Rice
Registration No: 50923

DESIGN LIMITS	
Max: Wind Velocity:	150 mph (67 m/s)
Max: Desigh Load:	±90 psf (4.3 Kpa)
Max: Overall Enclosure W X L:	39.846 X 46.549 in. (1012 X 1182 mm)
Max: Overall Unit Height:	57.75 in. (1467 mm)

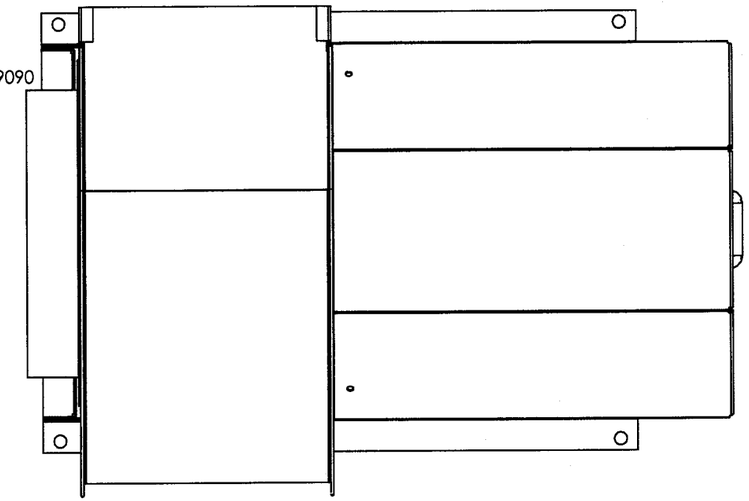

UNIT	FASTENER F QTY.	FASTENER F DESCRIPTION	FASTENER G QTY.	FASTENER G DESCRIPTION	FASTENER H QTY.	FASTENER H DESCRIPTION	FASTENER J QTY.	FASTENER J DESCRIPTION
SWB-106	6 EA.	BOLT, SPNLK 5/16-18 X 1/2 ZP NUT, SPNLK 5/16-18 ZP	13	SMS 12 X 5/8 IHH NEOPWA ZP	8	SMS 12 X 3/4 TEK IHH NEOPWA ZP	8	TCS 1/4-20 X 3/4 ZP
SWB-107								
SWB-108								
SWB-110								
SWB-113								
SWB-115			18		10			TCS 5/16-18 X 5/8 ZP
SWB-116								
SWB-118	6 EA.	BOLT, SPNLK 3/8-16 X 3/4 ZP NUT, SPNLK 3/8-16 ZP						
SWB-120								
SWB-124			20					
SWB-206			13		8			TCS 1/4-20 X 3/4 ZP
SWB-207								
SWB-208								
SWB-210								
SWB-212								
SWB-213								
SWB-215			18		10			TCS 5/16-18 X 5/8 ZP
SWB-216								
SWB-218								
SWB-220								
SWB-222			20					
SWB-224								

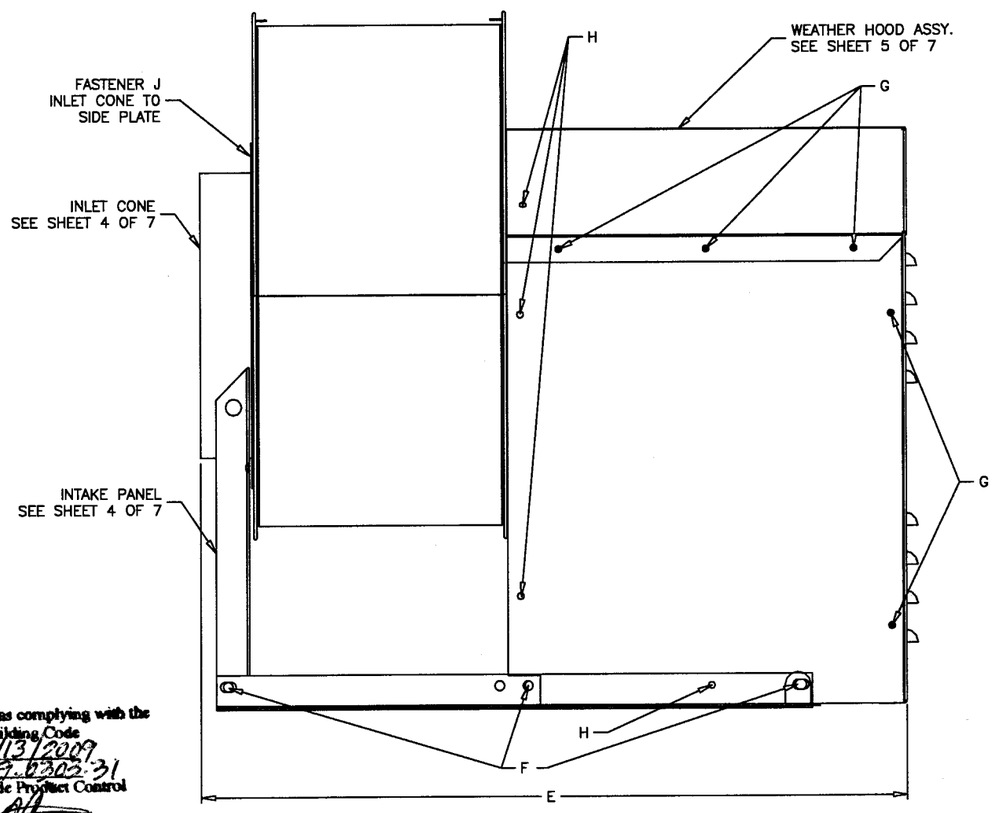

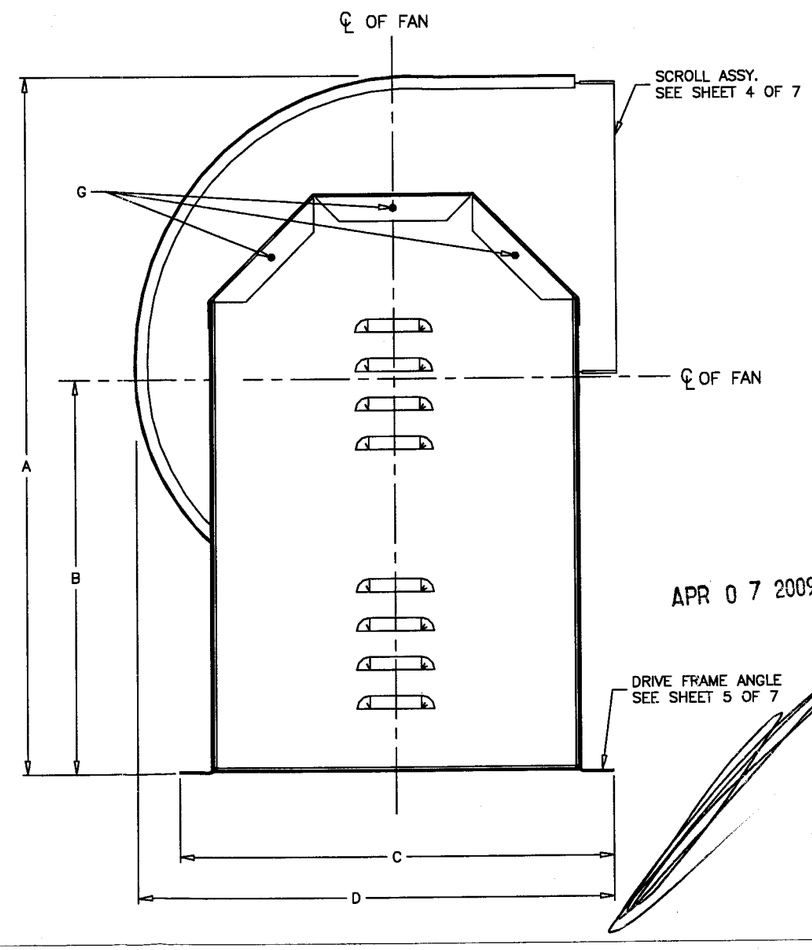

ALL DIMENSIONS ARE IN INCHES

UNIT	A	B	C	D	E	WEIGHT (LBS.)
SWB-106	26.625	15.125	16.780	18.515	27.299	135
SWB-107	26.625	15.125	16.780	18.515	27.299	135
SWB-108	26.625	15.125	16.780	18.515	27.299	135
SWB-110	26.625	15.125	16.780	18.515	27.299	135
SWB-113	31.250	16.625	19.346	22.483	29.424	175
SWB-115	34.750	18.500	21.096	24.724	32.049	225
SWB-116	38.125	20.375	23.158	27.048	34.299	241
SWB-118	42.000	22.375	25.470	29.937	38.174	312
SWB-120	46.000	24.500	28.876	33.265	41.174	374
SWB-124	57.750	31.500	33.942	39.846	46.549	546
SWB-206	26.625	15.125	16.780	18.515	25.799	140
SWB-207	26.625	15.125	16.780	18.515	25.799	140
SWB-208	26.625	15.125	16.780	18.515	25.799	140
SWB-210	26.625	15.125	16.780	18.515	25.799	140
SWB-212	28.375	15.125	16.780	19.992	27.174	170
SWB-213	31.250	16.625	19.346	22.483	29.424	183
SWB-215	34.750	18.500	21.096	24.724	32.049	231
SWB-216	38.125	20.375	23.158	27.048	34.299	251
SWB-218	42.000	22.375	25.470	29.937	38.174	324
SWB-220	46.000	24.500	28.876	33.265	41.174	389
SWB-222	52.500	28.750	31.316	36.367	43.549	450
SWB-224	57.750	31.500	33.942	39.846	46.549	568

NOTES:

1. MODELS SWB, SFB, SFD HAVE BEEN SUCCESSFULLY TESTED IN ACCORDANCE WITH MIAMI DADE TEST PROTOCOL TAS-201 (LARGE MISSILE IMPACT), TAS-202 (STATIC LOADING), AND TAS-203 (CYCLIC WIND LOADING).
2. ROOF STRUCTURE MUST BE DESIGNED TO WITHSTAND THE WEIGHT AND LOADING TRANSMITTED BY ROOF TOP FANS. FASTENERS SHALL BE AS SPECIFIED AND INSTALLED AS DETAILED.
3. DESIGN, TESTING, AND INSTALLATION CONFORMS TO FLORIDA BUILDING CODE.
4. DESIGN PRESSURE = +/_ 90 PSF LARGE MISSLE IMPACT RESISTANT.
5. TESTED FOR AREAS INCLUDING HIGH VELOCITY HURRICANE ZONES.
6. THESE FANS HAVE NOT BEEN TESTED FOR WIND DRIVEN RAIN TEST PER FLORIDA BUILDING CODE, TAS-100 (A)-95
7. THIS APPROVAL IS FOR THE STRUCTURAL CAPACITY AND IMPACT RATING OF THE EXTERIOR HOUSING ONLY, IT DOES NOT INCLUDE ANY INTERIOR MECHANISM OR ELECTRICAL PART.

APR 0 7 2009

Approved as complying with the Florida Building Code
Date 05/13/2009
NOA# 09.0302.31
Miami Dade Product Control Division
By

GREENHECK
FAN CORP. SCHOFIELD, WISCONSIN 54476-0403

DRAWN BY YAKLOVICH
DATE 12/08/2008
SCALE 1/3
TITLE SWB-106-224 SHEET 1 OF 7
DWG NUMBER HUF1001

REVISION	DCR	BY	DATE	SYM
CREATED HURRICANE RATED DWG.		DFY	02/13 2009	0

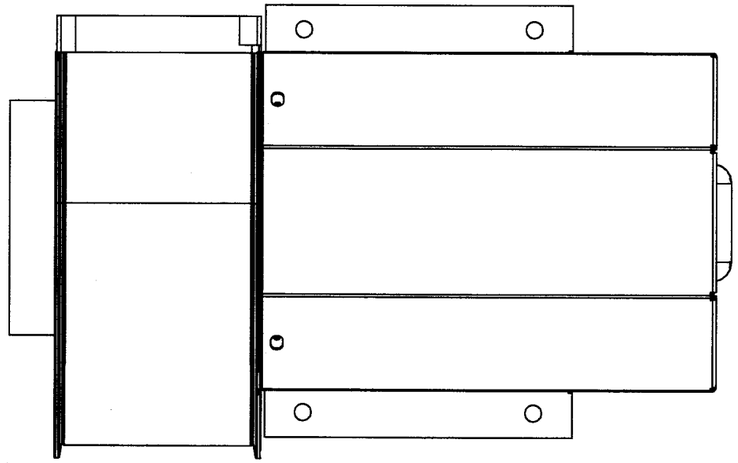

RICE ENGINEERING
105 School Creek Trail
Luxemburg, WI 54217
Phone: 920.845.1042
Fax: 920.845.1048
www.rice-inc.com

Florida Firm No: F-01000005061
Certificate of Authorization: #9090
L. David Rice
Registration No: 50923

DESIGN LIMITS	
Max: Wind Velocity:	150 mph (67 m/s)
Max: Desigh Load:	±90 psf (4.3 Kpa)
Max: Overall Enclosure W X L:	18.500 X 19.375 in. (470 X 492 mm)
Max: Overall Unit Height:	24.313 in. (618 mm)

UNIT	FASTENER F		FASTENER G	
	QTY.	DESCRIPTION	QTY.	DESCRIPTION
SFD-6 SFD-7.5 SFD-9 SFD-10	10	SMS, 12 X .625 IHH NEOPWA ZP	4 EA.	BOLT, SPNLK 5/16-18 X 1/2 ZP NUT, SPNLK 5/16-18 ZP

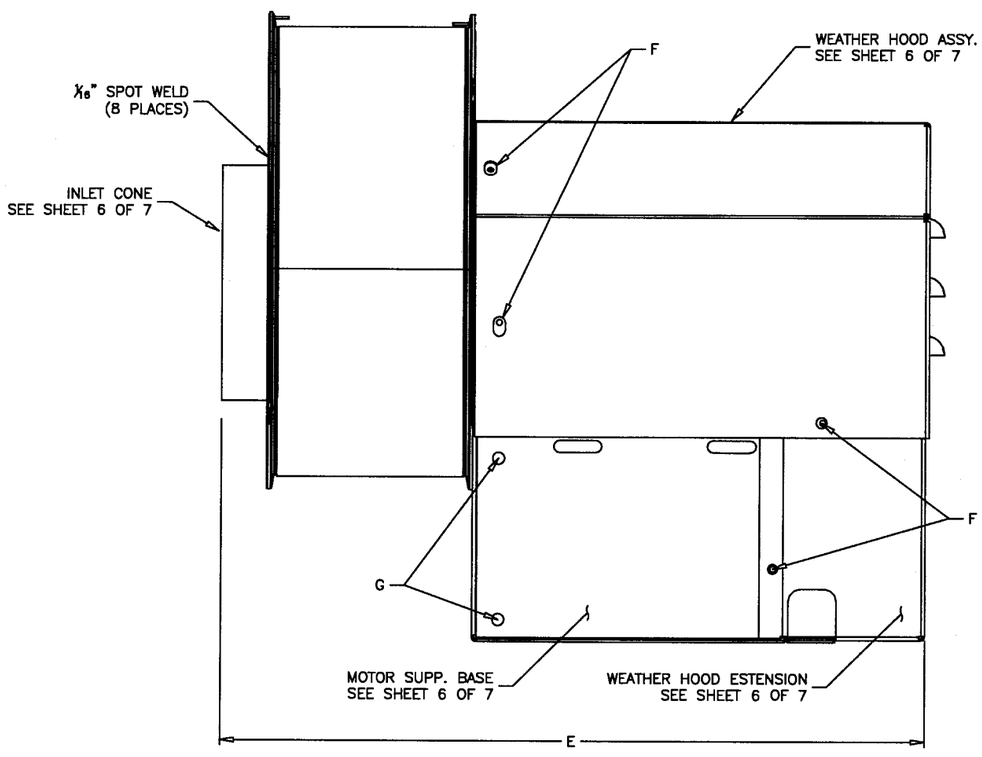

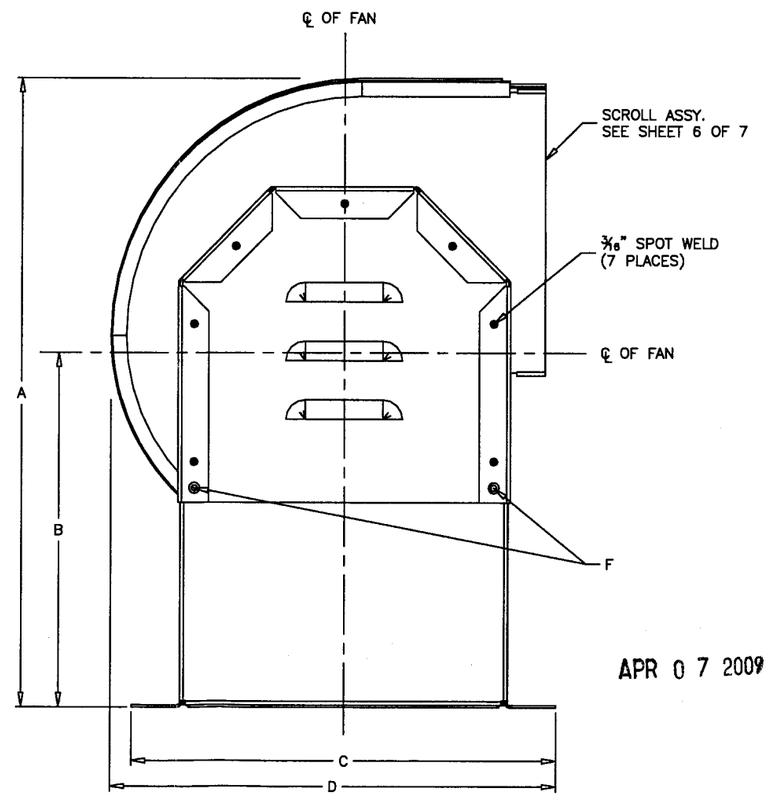

ALL DIMENSIONS ARE IN INCHES

UNIT	A	B	C	D	E	WEIGHT (LBS.)
SFD-6	16.000	9.063	11.000	11.625	14.688	30
SFD-7.5	18.063	9.625	12.250	13.813	14.313	40
SFD-9	20.313	10.750	13.750	15.688	17.875	75
SFD-10	24.313	12.750	16.250	18.500	19.375	113

NOTES:

1. MODELS SWB, SFB, SFD HAVE BEEN SUCCESSFULLY TESTED IN ACCORDANCE WITH MIAMI DADE TEST PROTOCOL TAS-201 (LARGE MISSILE IMPACT), TAS-202 (STATIC LOADING), AND TAS-203 (CYCLIC WIND LOADING).
2. ROOF STRUCTURE MUST BE DESIGNED TO WITHSTAND THE WEIGHT AND LOADING TRANSMITTED BY ROOF TOP FANS. FASTENERS SHALL BE AS SPECIFIED AND INSTALLED AS DETAILED.
3. DESIGN, TESTING, AND INSTALLATION CONFORMS TO FLORIDA BUILDING CODE.
4. DESIGN PRESSURE = +/_ 90 PSF LARGE MISSLE IMPACT RESISTANT.
5. TESTED FOR AREAS INCLUDING HIGH VELOCITY HURRICANE ZONES.
6. THESE FANS HAVE NOT BEEN TESTED FOR WIND DRIVEN RAIN TEST PER FLORIDA BUILDING CODE, TAS-100 (A)-95
7. THIS APPROVAL IS FOR THE STRUCTURAL CAPACITY AND IMPACT RATING OF THE EXTERIOR HOUSING ONLY, IT DOES NOT INCLUDE ANY INTERIOR MECHANISM OR ELECTRICAL PART.

APR 0 7 2009

Approved as complying with the Florida Building Code
Date 05/13/2009
NOA# 09-0303.31
Miami Dade Product Control Division
By

GREENHECK
PARK 400 SCHOFIELD, WISCONSIN 54476-0400

YAKLOVICH
12/08/2008

SFD-6-10
SHEET 2 OF 7

1/2

HUF1002

REVISION	BCR	BY	DATE	SYM
CREATED HURRICANE RATED DWG.		DFY	02/10 2009	0

DESIGN LIMITS	
Max: Wind Velocity:	150 mph (67 m/s)
Max: Desigh Load:	±90 psf (4.3 Kpa)
Max: Overall Enclosure W X L:	39.688 X 47.000 in. (1008 X 1194 mm)
Max: Overall Unit Height:	57.75 in. (1467 mm)

UNIT	FASTENER F		FASTENER G		FASTENER H		FASTENER J	
	QTY.	DESCRIPTION	QTY.	DESCRIPTION	QTY.	DESCRIPTION	QTY.	DESCRIPTION
SFB-9	6 EA.	BOLT, SPNLK 5/16-18 X 1/2 ZP NUT, SPNLK 5/16-18 ZP	13	SMS 12 X 5/8 IHH NEOPWA ZP	8	SMS 12 X 3/4 TEK IHH NEOPWA ZP	8	1/16" SPOT WELDS
SFB-10								TCS 1/4-20 X 3/4 ZP
SFB-12								TCS 5/16-18 X 5/8 ZP
SFB-15								
SFB-18	6 EA.	BOLT, SPNLK 3/8-16 X 3/4 ZP NUT, SPNLK 3/8-16 ZP	18		10			
SFB-20								
SFB-22			20					
SFB-25								

RICE ENGINEERING
105 School Creek Trail
Luxemburg, WI 54217
Phone: 920.845.1042
Fax: 920.845.1048
www.rice-inc.com

Florida Firm No: F-01000005061
Certificate of Authorization: #9090
L. David Rice
Registration No: 50923

ALL DIMENSIONS ARE IN INCHES

UNIT	A	B	C	D	E	WEIGHT (LBS.)
SFB-9	24.000	13.750	14.250	16.000	24.125	120
SFB-10	26.625	15.125	16.875	18.563	26.000	130
SFB-12	28.375	15.125	16.875	20.063	26.500	147
SFB-15	31.25	16.625	18.875	22.188	31.500	214
SFB-18	42.000	22.375	25.125	29.688	41.750	265
SFB-20	46.000	24.500	27.375	32.438	41.625	405
SFB-22	52.500	28.750	30.750	36.125	44.000	540
SFB-25	57.750	31.500	33.625	39.688	47.000	700

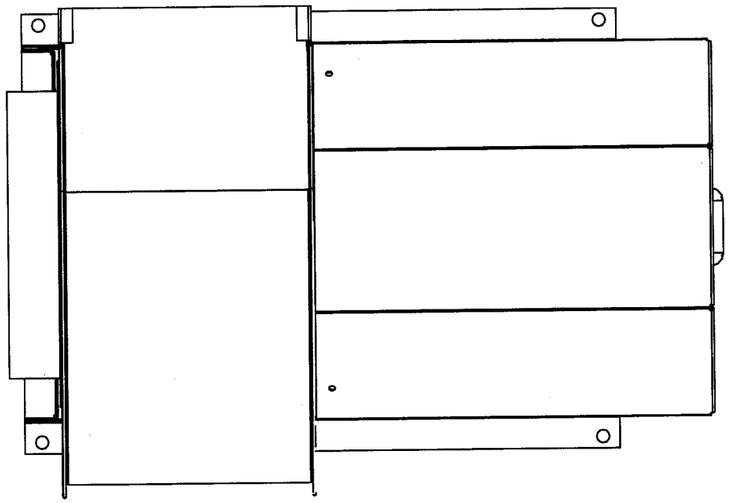

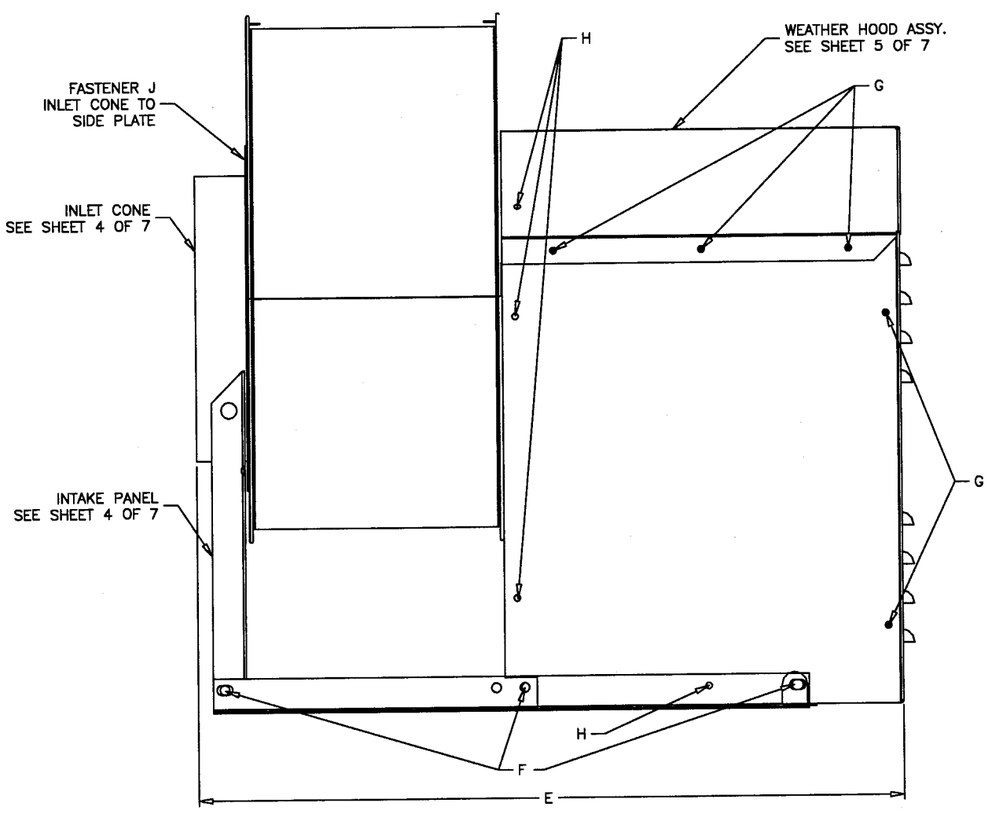

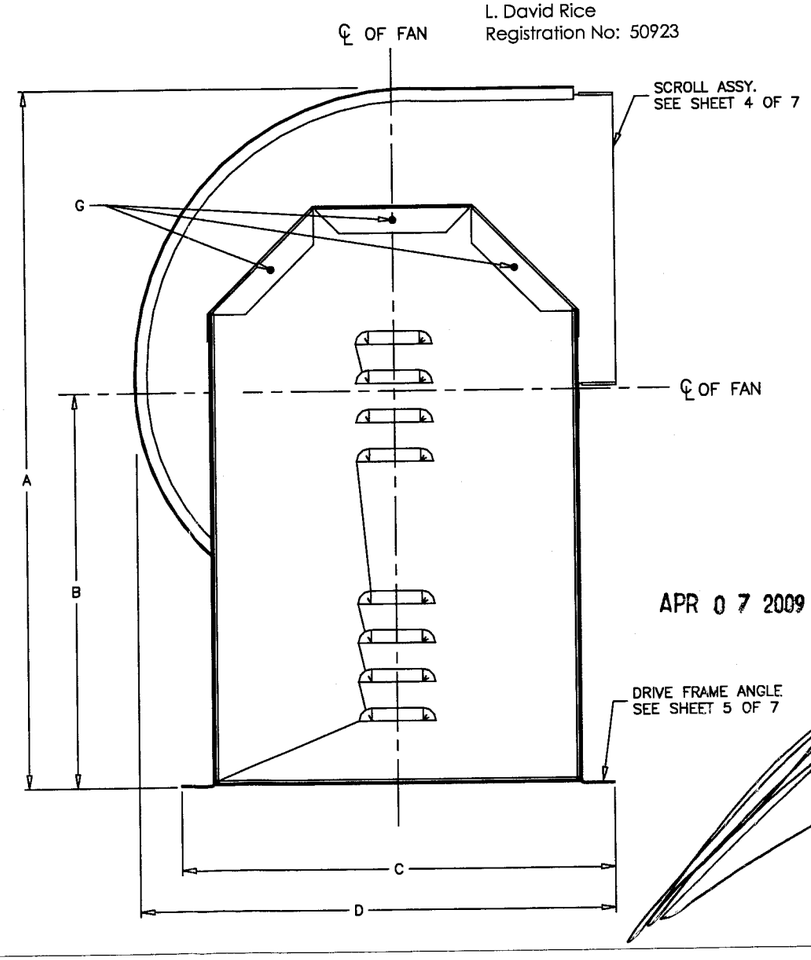

APR 0 7 2009

Approved as complying with the Florida Building Code
Date 05/13/2009
NOA# 09-0303.31
Miami Dade Product Control Division
By

NOTES:

1. MODELS SWB, SFB, SFD HAVE BEEN SUCCESSFULLY TESTED IN ACCORDANCE WITH MIAMI DADE TEST PROTOCOL TAS-201 (LARGE MISSILE IMPACT), TAS-202 (STATIC LOADING), AND TAS-203 (CYCLIC WIND LOADING).
2. ROOF STRUCTURE MUST BE DESIGNED TO WITHSTAND THE WEIGHT AND LOADING TRANSMITTED BY ROOF TOP FANS. FASTENERS SHALL BE AS SPECIFIED AND INSTALLED AS DETAILED.
3. DESIGN, TESTING, AND INSTALLATION CONFORMS TO FLORIDA BUILDING CODE.
4. DESIGN PRESSURE = +/_ 90 PSF LARGE MISSLE IMPACT RESISTANT.
5. TESTED FOR AREAS INCLUDING HIGH VELOCITY HURRICANE ZONES.
6. THESE FANS HAVE NOT BEEN TESTED FOR WIND DRIVEN RAIN TEST PER FLORIDA BUILDING CODE, TAS-100 (A)-95
7. THIS APPROVAL IS FOR THE STRUCTURAL CAPACITY AND IMPACT RATING OF THE EXTERIOR HOUSING ONLY, IT DOES NOT INCLUDE ANY INTERIOR MECHANISM OR ELECTRICAL PART.

GREENHECK
FLUKE 400 SCHOFIELD, WISCONSIN 54476-0400

DRAWN BY	YAKLOVICH
DATE	12/08/2008
SCALE	1/3
DWG NUMBER	HUF1003

TITLE: SFB-9-25
SHEET 3 OF 7

REVISION	BCR	BY	DATE	SYM
CREATED HURRICANE RATED DWG.		DFY	02/10 2009	1

RICE ENGINEERING

105 School Creek Trail
Luxemburg, WI 54217
Phone: 920.845.1042
Fax: 920.845.1048
www.rice-inc.com

Florida Firm No: F-01000005061
Certificate of Authorization: #9090
L. David Rice
Registration No: 50923

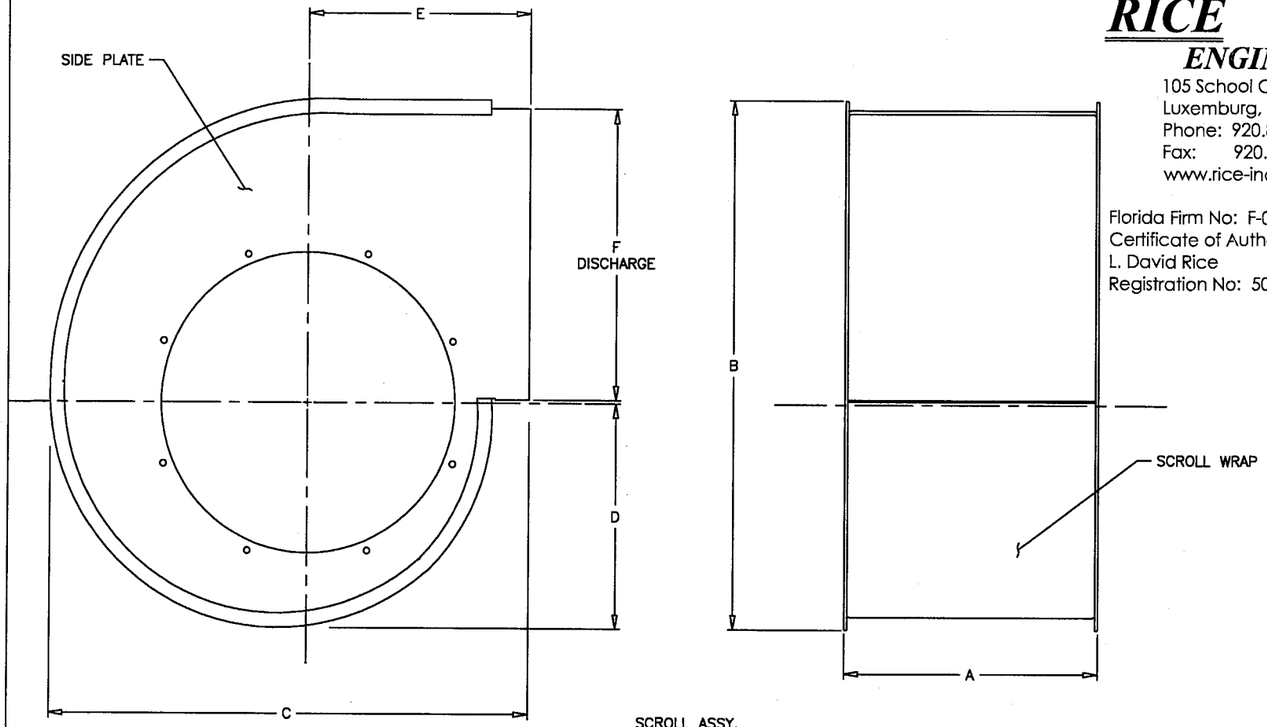

SCROLL ASSY.

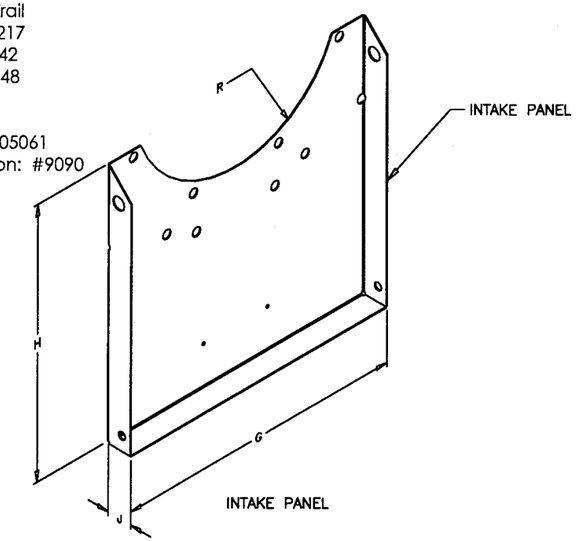

INTAKE PANEL

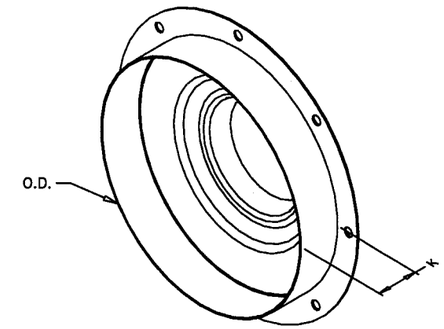

INLET CONE

UNIT	A	B	C	D	E	F	SIDE PLATE	SCROLL WRAP
SWB–106	9.750	20.085	18.750	8.570	8.625	11.250	14 GA. GALV. G90	24 GA. GALV. G90
SWB–107	9.750	20.085	18.750	8.570	8.625	11.250	14 GA. GALV. G90	24 GA. GALV. G90
SWB–108	9.750	20.085	18.750	8.570	8.625	11.250	14 GA. GALV. G90	24 GA. GALV. G90
SWB–110	9.750	20.085	18.750	8.570	8.625	11.250	14 GA. GALV. G90	24 GA. GALV. G90
SWB–113	10.625	25.458	23.375	10.863	10.565	14.250	14 GA. GALV. G90	18 GA. GALV. G90
SWB–115	11.625	28.271	25.750	12.074	11.574	15.750	18 GA. GALV. G90	18 GA. GALV. G90
SWB–116	12.750	30.968	28.000	13.226	12.531	17.500	14 GA. GALV. G90	18 GA. GALV. G90
SWB–118	14.125	34.232	30.875	14.612	13.673	19.375	14 GA. GALV. G90	18 GA. GALV. G90
SWB–120	15.375	37.470	33.625	15.986	14.798	21.125	14 GA. GALV. G90	18 GA. GALV. G90
SWB–124	19.000	45.726	40.625	19.523	17.750	26.000	14 GA. GALV. G90	18 GA. GALV. G90
SWB–206	8.250	20.085	18.750	8.570	8.625	11.250	14 GA. GVNL. A60	24 GA. GVNL. A60
SWB–207	8.250	20.085	18.750	8.570	8.625	11.250	14 GA. GVNL. A60	24 GA. GVNL. A60
SWB–208	8.250	20.085	18.750	8.570	8.625	11.250	14 GA. GVNL. A60	24 GA. GVNL. A60
SWB–210	8.250	20.085	18.750	8.570	8.625	11.250	14 GA. GVNL. A60	24 GA. GVNL. A60
SWB–212	9.625	23.097	21.375	9.879	9.773	13.000	14 GA. GVNL. A60	18 GA. GVNL. A60
SWB–213	10.625	25.458	23.375	10.863	10.565	14.500	14 GA. GVNL. A60	18 GA. GVNL. A60
SWB–215	11.625	28.271	25.750	12.074	11.574	15.750	14 GA. GVNL. A60	18 GA. GVNL. A60
SWB–216	12.750	30.968	28.000	13.226	12.531	17.500	14 GA. GVNL. A60	18 GA. GVNL. A60
SWB–218	14.125	34.232	30.875	14.612	13.673	19.375	14 GA. GVNL. A60	18 GA. GVNL. A60
SWB–220	15.375	37.470	33.625	15.986	14.798	21.125	14 GA. GVNL. A60	18 GA. GVNL. A60
SWB–222	17.000	41.379	36.875	17.646	16.166	23.500	14 GA. GVNL. A60	18 GA. GVNL. A60
SWB–224	19.000	45.726	40.625	19.523	17.750	26.000	14 GA. GVNL. A60	18 GA. GVNL. A60
SFB–9	6.625	17.844	16.875	7.954	8.000	10.125	16 GA. GVNL. A60	24 GA. GVNL. A60
SFB–10	8.500	20.085	19.375	8.585	9.250	11.750	14 GA. GVNL. A60	24 GA. GVNL. A60
SFB–12	9.000	23.097	21.375	9.847	9.750	13.625	14 GA. GVNL. A60	18 GA. GVNL. A60
SFB–15	12.750	25.458	23.375	10.833	10.625	16.000	14 GA. GVNL. A60	18 GA. GVNL. A60
SFB–18	17.750	34.232	30.875	14.607	13.750	19.375	14 GA. GVNL. A60	18 GA. GVNL. A60
SFB–20	15.875	37.470	33.625	15.970	14.875	22.000	14 GA. GVNL. A60	18 GA. GVNL. A60
SFB–22	17.500	41.379	36.750	17.629	17.500	27.625	14 GA. GVNL. A60	18 GA. GVNL. A60
SFB–25	19.500	45.726	40.375	19.476	17.500	31.625	14 GA. GVNL. A60	18 GA. GVNL. A60

UNIT	G	H	J	R	INTAKE PANEL
SWB–106	14.140	13.070	1.320	5.625	14 GA. GALV. G90
SWB–107	14.140	13.070	1.320	5.625	14 GA. GALV. G90
SWB–108	14.140	13.070	1.320	5.625	14 GA. GALV. G90
SWB–110	14.140	13.070	1.320	5.625	14 GA. GALV. G90
SWB–113	16.140	14.320	1.320	7.187	14 GA. GALV. G90
SWB–115	17.890	15.945	1.570	8.062	14 GA. GALV. G90
SWB–116	19.140	17.320	1.570	8.875	14 GA. GALV. G90
SWB–118	21.140	18.979	1.570	9.875	14 GA. GALV. G90
SWB–120	24.140	20.695	2.070	10.688	14 GA. GALV. G90
SWB–124	28.206	27.003	2.603	13.250	12 GA. GALV. G90
SWB–206	14.140	13.070	1.320	5.625	14 GA. GVNL. A60
SWB–207	14.140	13.070	1.320	5.625	14 GA. GVNL. A60
SWB–208	14.140	13.070	1.320	5.625	14 GA. GVNL. A60
SWB–210	14.140	13.070	1.320	5.625	14 GA. GVNL. A60
SWB–212	14.140	13.070	1.320	6.625	14 GA. GVNL. A60
SWB–213	16.140	14.320	1.320	7.187	14 GA. GVNL. A60
SWB–215	17.890	15.945	1.570	8.062	14 GA. GVNL. A60
SWB–216	19.140	17.320	1.570	8.875	14 GA. GVNL. A60
SWB–218	21.140	18.979	1.570	9.875	14 GA. GVNL. A60
SWB–220	24.140	20.695	2.070	10.688	14 GA. GVNL. A60
SWB–222	25.706	24.688	2.253	11.875	12 GA. GVNL. A60
SWB–224	28.206	27.003	2.603	13.250	12 GA. GVNL. A60
SFB–9	——	——	——	——	——
SFB–10	14.140	13.070	1.320	5.625	14 GA. GVNL. A60
SFB–12	14.140	13.070	1.320	6.625	14 GA. GVNL. A60
SFB–15	16.140	14.320	1.320	7.750	14 GA. GVNL. A60
SFB–18	21.140	18.979	1.570	9.875	14 GA. GALV. G90
SFB–20	24.140	20.695	2.070	10.688	14 GA. GVNL. A60
SFB–22	25.706	24.688	2.253	11.875	12 GA. GVNL. A60
SFB–25	28.206	27.003	2.603	13.250	12 GA. GVNL. A60

UNIT	O.D.	K	INLET CONE
SWB–106	11.028	2.000	14 GA. GALV. G90
SWB–107	11.028	2.000	14 GA. GALV. G90
SWB–108	11.028	2.000	14 GA. GALV. G90
SWB–110	11.028	2.000	14 GA. GALV. G90
SWB–113	13.897	2.000	14 GA. GALV. G90
SWB–115	15.778	2.000	14 GA. GALV. G90
SWB–116	17.398	2.000	14 GA. GALV. G90
SWB–118	19.148	2.000	14 GA. GALV. G90
SWB–120	21.028	2.000	14 GA. GALV. G90
SWB–124	25.778	2.500	14 GA. GALV. G90
SWB–206	11.028	2.000	14 GA. GALV. G90
SWB–207	11.028	2.000	14 GA. GALV. G90
SWB–208	11.028	2.000	14 GA. CRDS
SWB–210	11.028	2.000	14 GA. CRDS
SWB–212	12.898	2.000	14 GA. CRDS
SWB–213	13.897	2.000	14 GA. CRDS
SWB–215	15.778	2.000	14 GA. CRDS
SWB–216	17.398	2.000	14 GA. CRDS
SWB–218	19.148	2.000	14 GA. CRDS
SWB–220	21.028	2.000	14 GA. CRDS
SWB–222	22.898	2.500	14 GA. CRDS
SWB–224	25.778	2.500	14 GA. CRDS
SFB–9	10.982	0.938	24 GA. GVNL. A60
SFB–10	10.982	2.000	14 GA. CRDS
SFB–12	13.000	2.000	14 GA. CRDS
SFB–15	15.375	2.000	14 GA. CRDS
SFB–18	19.250	2.000	14 GA. CRDS
SFB–20	21.125	2.000	14 GA. CRDS
SFB–22	23.000	2.500	14 GA. CRDS
SFB–25	25.875	2.500	14 GA. CRDS

APR 0 7 2009

Approved as complying with the Florida Building Code
Date 05/13/2009
NOA# 09-0203.31
Miami Dade Product Control Division
By

ALL DIMENSIONS ARE IN INCHES

GREENHECK
FULDER 4B SCHOFIELD, WISCONSIN 54476-9400

DRAWN BY	YAKLOVICH
DATE	12/10/2008
SCALE	1/3
DWG DRAWING NO.	HUF1004

TITLE
SWB–106–224
SFB–9–25
SHEET 4 OF 7

REVISION	DCR	BY	DATE	SYM
CREATED HURRICANE RATED DWG.		DFY	02/10 2009	1

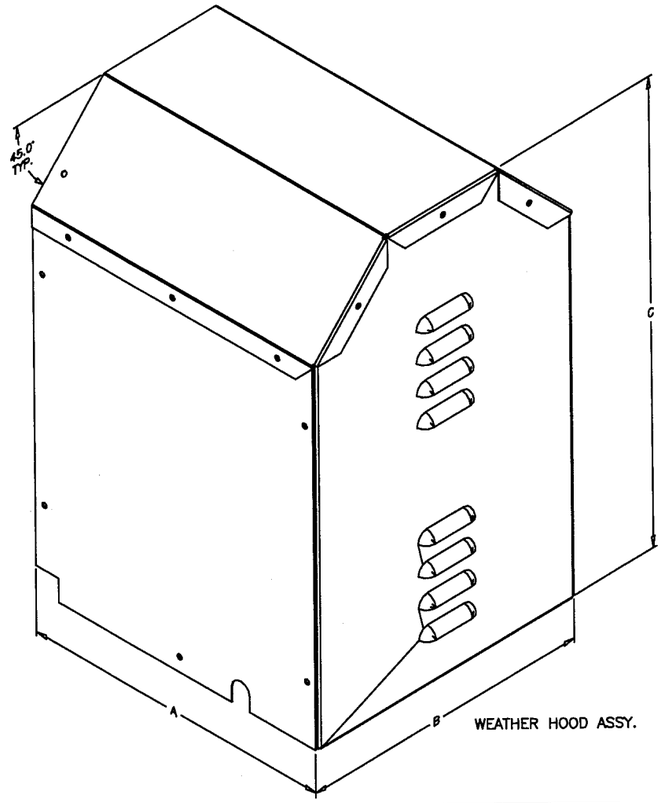

WEATHER HOOD ASSY.

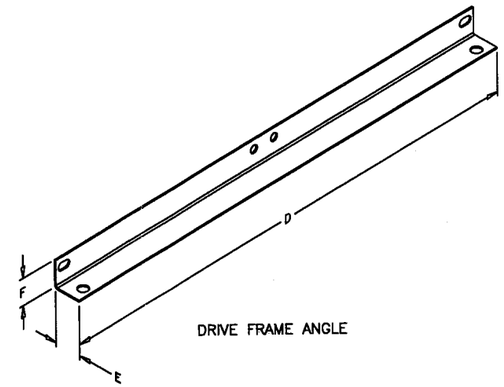

DRIVE FRAME ANGLE

UNIT	A	B	C	WEATHERHOOD ASSY.
SWB-106	15.549	14.098	22.098	18 GA. GALV. G90
SWB-107	15.549	14.098	22.098	18 GA. GALV. G90
SWB-108	15.549	14.098	22.098	18 GA. GALV. G90
SWB-110	15.549	14.098	22.098	18 GA. GALV. G90
SWB-113	16.799	16.098	24.514	18 GA. GALV. G90
SWB-115	18.424	17.909	27.336	18 GA. GALV. G90
SWB-116	19.549	19.195	29.785	18 GA. GALV. G90
SWB-118	22.049	21.161	32.888	18 GA. GALV. G90
SWB-120	23.799	23.206	35.661	18 GA. GALV. G90
SWB-124	25.049	28.257	45.348	18 GA. GALV. G90
SWB-206	15.549	14.098	22.098	18 GA. GVNL. A60
SWB-207	15.549	14.098	22.098	18 GA. GVNL. A60
SWB-208	15.549	14.098	22.098	18 GA. GVNL. A60
SWB-210	15.549	14.098	22.098	18 GA. GVNL. A60
SWB-212	15.549	14.098	22.098	18 GA. GVNL. A60
SWB-213	16.799	16.098	24.514	18 GA. GVNL. A60
SWB-215	18.424	17.909	27.336	18 GA. GVNL. A60
SWB-216	19.549	19.195	29.785	18 GA. GVNL. A60
SWB-218	22.049	21.161	32.888	18 GA. GVNL. A60
SWB-220	23.799	23.206	35.661	18 GA. GVNL. A60
SWB-222	24.049	25.611	41.194	18 GA. GVNL. A60
SWB-224	25.049	28.257	45.348	18 GA. GVNL. A60
SFB-9	15.549	12.098	19.723	18 GA. GVNL. A60
SFB-10	15.549	14.098	22.098	18 GA. GVNL. A60
SFB-12	15.549	14.098	22.098	18 GA. GVNL. A60
SFB-15	16.799	16.098	24.514	18 GA. GVNL. A60
SFB-18	22.049	21.161	32.888	18 GA. GVNL. A60
SFB-20	23.799	23.206	35.661	18 GA. GVNL. A60
SFB-22	24.049	25.611	41.194	18 GA. GVNL. A60
SFB-25	25.049	28.257	45.348	18 GA. GVNL. A60

UNIT	D	E	F	DROVE FRAME ANGLE
SWB-106	23.209	1.320	1.320	14 GA. GALV. G90
SWB-107	23.209	1.320	1.320	14 GA. GALV. G90
SWB-108	23.209	1.320	1.320	14 GA. GALV. G90
SWB-110	23.209	1.320	1.320	14 GA. GALV. G90
SWB-113	24.968	1.603	1.603	12 GA. GALV. G90
SWB-115	28.250	1.603	1.603	12 GA. GALV. G90
SWB-116	30.081	2.009	2.009	12 GA. GALV. G90
SWB-118	33.648	2.165	2.165	12 GA. GALV. G90
SWB-120	36.648	2.368	2.368	11 GA. GALV. G90
SWB-124	41.120	2.868	2.868	11 GA. GALV. G90
SWB-206	21.584	1.320	1.320	14 GA. GVNL. A60
SWB-207	21.584	1.320	1.320	14 GA. GVNL. A60
SWB-208	21.584	1.320	1.320	14 GA. GVNL. A60
SWB-210	21.584	1.320	1.320	14 GA. GVNL. A60
SWB-212	22.897	1.320	1.320	14 GA. GVNL. A60
SWB-213	24.968	1.603	1.603	12 GA. GVNL. A60
SWB-215	28.250	1.603	1.603	12 GA. GVNL. A60
SWB-216	30.081	2.009	2.009	12 GA. GVNL. G90
SWB-218	33.648	2.165	2.165	12 GA. GVNL. A60
SWB-220	36.648	2.368	2.368	11 GA. HRS PO DSB
SWB-222	38.962	2.805	2.805	11 GA. HRS PO DSB
SWB-224	41.120	2.868	2.868	11 GA. HRS PO DSB
SFB-9	11.313	1.107	1.320	14 GA. GVNL. A60
SFB-10	21.584	1.320	1.320	14 GA. GVNL. A60
SFB-12	22.334	1.320	1.320	14 GA. GVNL. A60
SFB-15	27.122	1.603	1.603	12 GA. GVNL. A60
SFB-18	36.773	2.165	2.165	12 GA. GVNL. A60
SFB-20	36.648	2.368	2.368	11 GA. HRS PO DSB
SFB-22	38.962	2.805	2.805	11 GA. HRS PO DSB
SFB-25	41.120	2.868	2.868	11 GA. HRS PO DSB

Approved as complying with the Florida Building Code
Date 05/13/2009
NOA# 09-0303.31
Miami Dade Product Control Division
By

APR 0 7 2009

RICE ENGINEERING
105 School Creek Trail
Luxemburg, WI 54217
Phone: 920.845.1042
Fax: 920.845.1048
www.rice-inc.com

Florida Firm No: F-01000005061
Certificate of Authorization: #9090
L. David Rice
Registration No: 50923

ALL DIMENSIONS ARE IN INCHES

GREENHECK

DRAWN BY	YAKLOVICH
DATE	12/10/2008
SCALE	1/3
TITLE	SWB-106-224 SFB-9-25 SHEET 5 OF 7
DWG NUMBER	HUF1005

REVISION	BCR	BY	DATE	SYM
CREATED HURRICANE RATED DWG.		DFY	02/10 2009	1

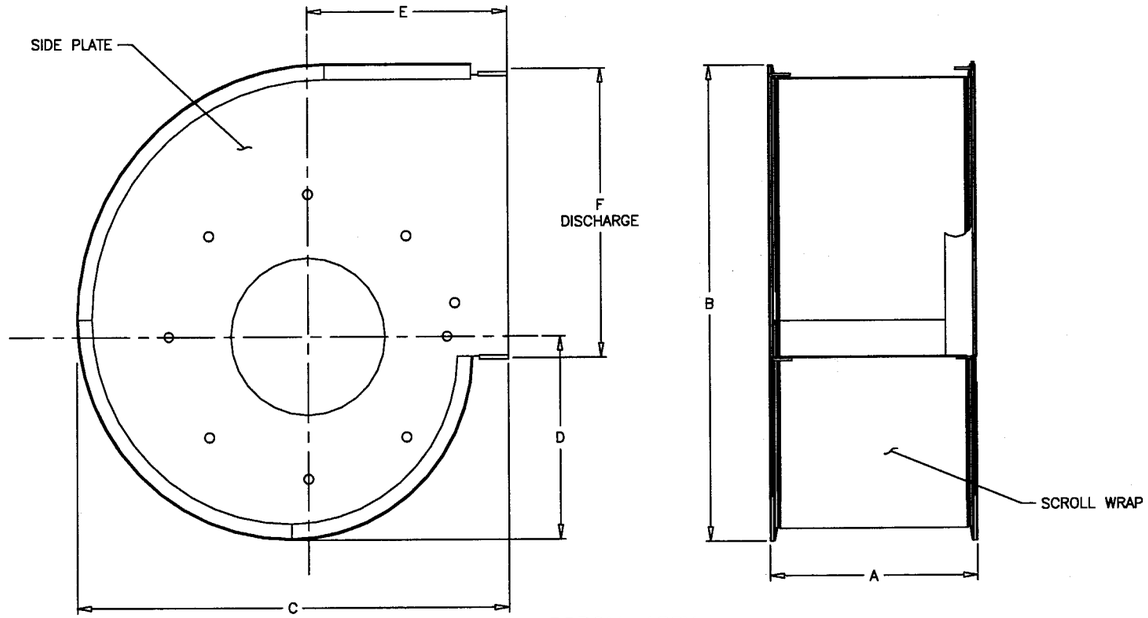

SCROLL ASSY.

UNIT	A	B	C	D	E	F	SIDE PLATE	SCROLL WRAP
6	5.250	16.000	11.250	5.151	5.188	7.375	16 GA. GALV. G90	24 GA. GALV. G90
7.5	5.250	18.063	13.688	6.246	6.375	9.000	16 GA. GALV. G90	24 GA. GALV. G90
9	6.250	20.313	15.813	7.169	7.438	10.125	16 GA. GALV. G90	24 GA. GALV. G90
10	6.750	24.313	18.625	8.571	8.500	12.125	16 GA. GALV. G90	24 GA. GALV. G90

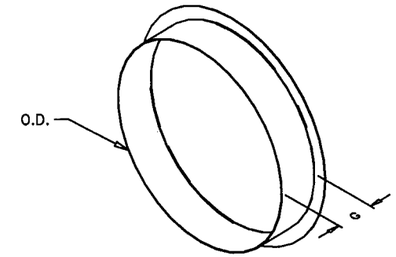

INLET CONE

UNIT	O.D.	G	INLET CONE
6	6.000	1.250	24 GA. GALV. G90
7.5	8.000	1.250	24 GA. GALV. G90
9	10.000	1.250	24 GA. GALV. G90
10	12.000	1.250	24 GA. GALV. G90

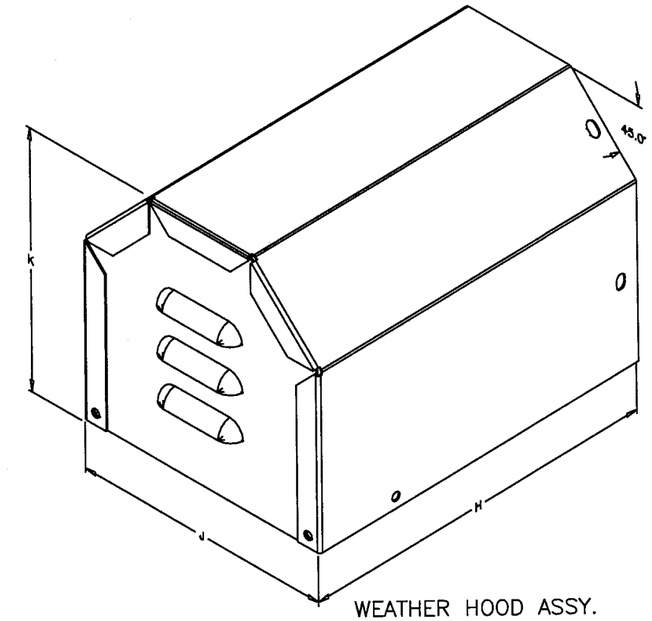

WEATHER HOOD ASSY.

UNIT	H	J	K	WEATHER HOOD ASSY.
6	11.750	8.500	8.000	18 GA. GALV. G90
7.5	11.625	9.500	9.313	18 GA. GALV. G90
9	13.875	11.375	9.981	18 GA. GALV. G90
10	15.750	13.875	11.813	18 GA. GALV. G90

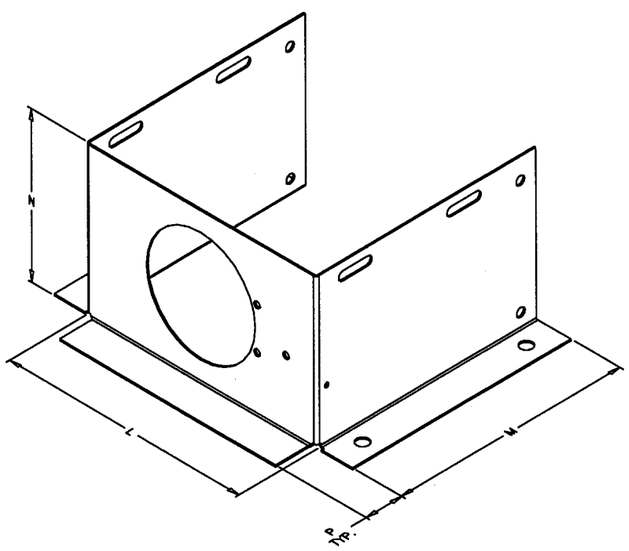

MOTOR SUPP. BASE

UNIT	L	M	N	P	MOTOR SUPP. BASE
6	8.491	8.000	5.433	1.250	16 GA. GALV. G90
7.5	9.741	8.000	5.996	1.250	16 GA. GALV. G90
9	11.241	10.250	7.152	1.250	16 GA. GALV. G90
10	13.741	11.250	8.074	1.250	16 GA. GALV. G90

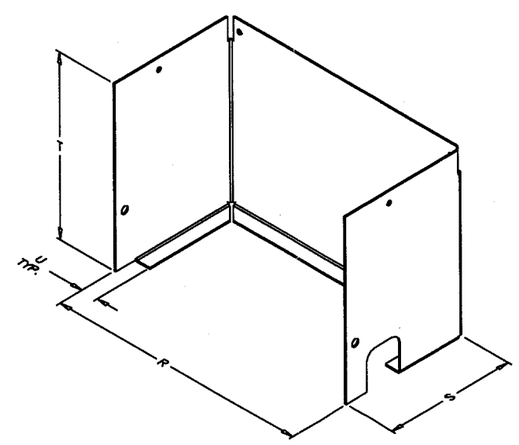

WEATHER HOOD EXTENSION

UNIT	R	S	T	U	WEATHER HOOD EXTENSION
6	8.598	8.058	5.433	.549	18 GA. GALV. G90
7.5	9.848	8.058	5.996	.549	18 GA. GALV. G90
9	11.348	10.308	7.152	.549	18 GA. GALV. G90
10	13.848	11.308	8.074	.549	18 GA. GALV. G90

Approved as complying with the Florida Building Code
Date 03/13/2009
NOA# 09-0303.31
Miami Dade Product Control Division
By

APR 0 7 2009

RICE ENGINEERING
105 School Creek Trail
Luxemburg, WI 54217
Phone: 920.845.1042
Fax: 920.845.1048
www.rice-inc.com

Florida Firm No: F-01000005061
Certificate of Authorization: #9090
L. David Rice
Registration No: 50923

GREENHECK
5475 ROW ROAD, SCHOFIELD, WISCONSIN 54476-0483

DRAWN BY	YAKLOVICH
DATE	12/22/2008
SCALE	1/2
TITLE	SFD-6-10 SHEET 6 OF 7
DWG. NO.	HUF1006

REVISION	ECR	BY	DATE	SYM
CREATED HURRICANE RATED DWG.		DFY	02/10 2009	1

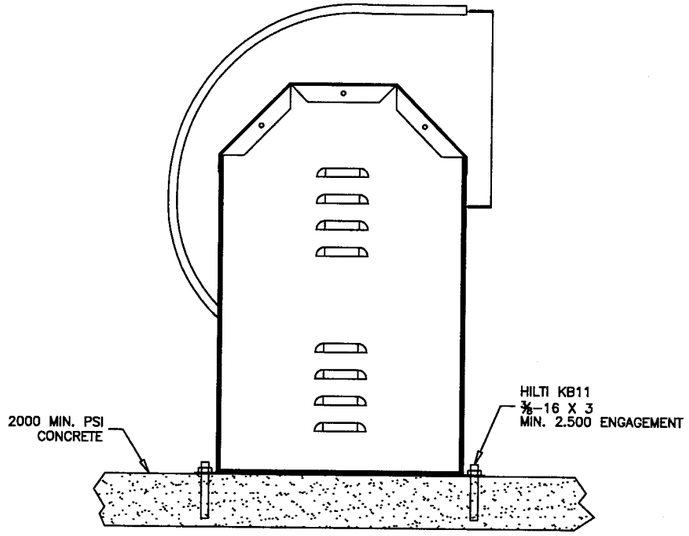

CONCRETE DECK ANCHORING

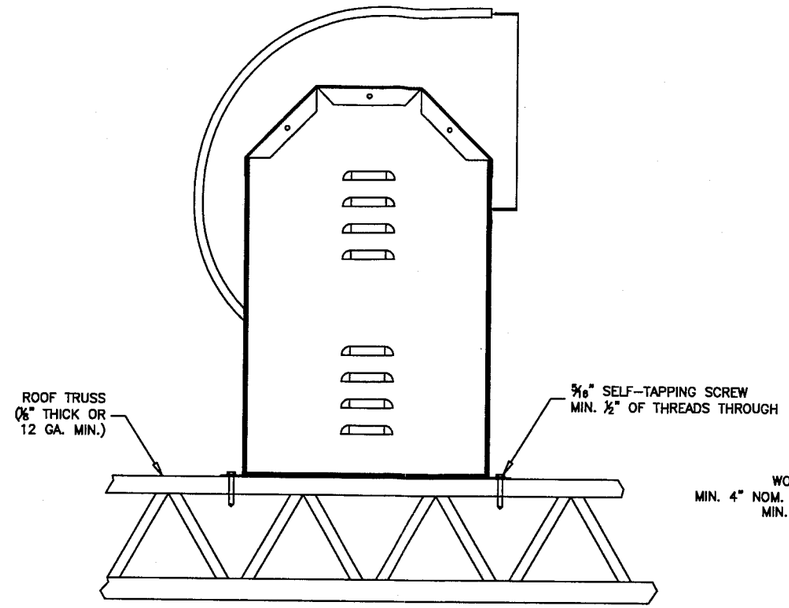

STEEL ANCHORING

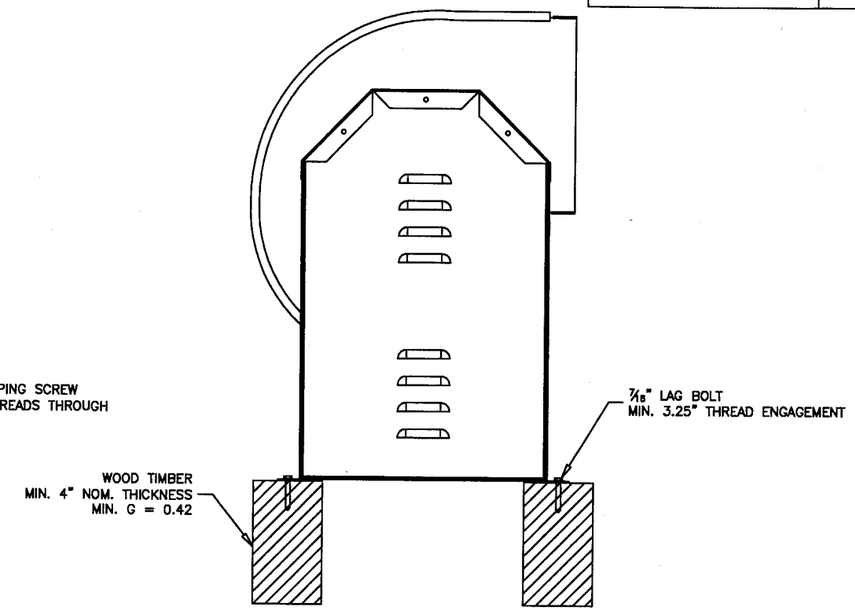

TIMBER ANCHORING

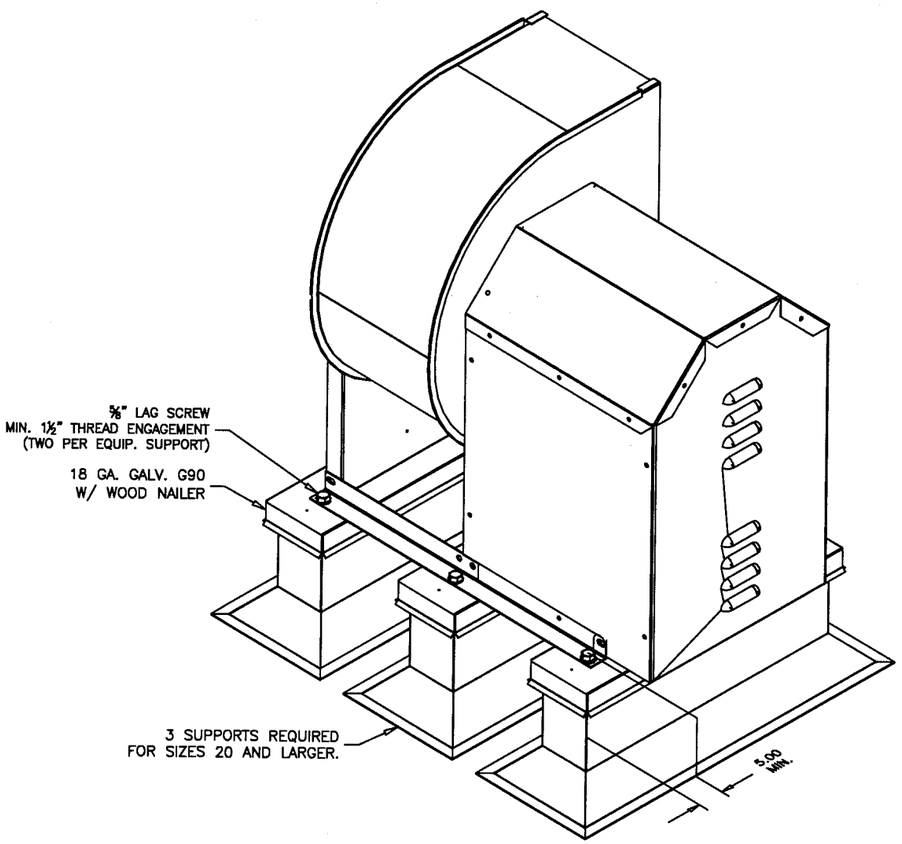

EQUIP. SUPPORT ANCHORING

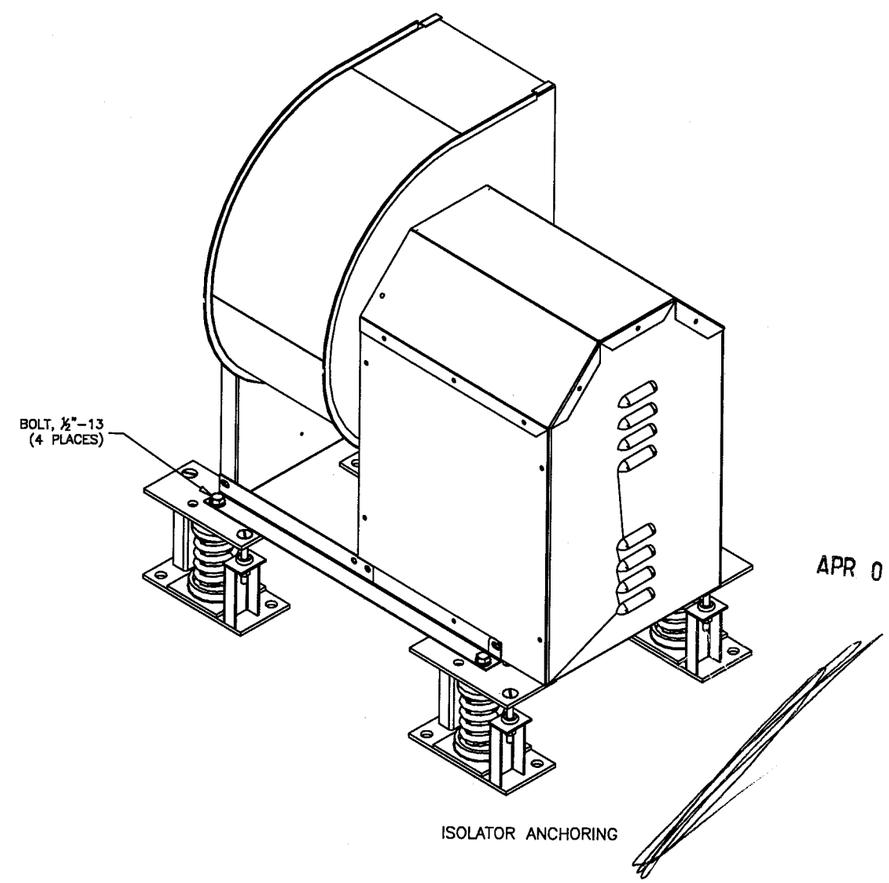

ISOLATOR ANCHORING

Approved as complying with the
Florida Building Code
Date 05/13/2009
NOA# 08-0303.31
Miami Dade Product Control
Division
By

APR 0 7 2009

RICE
ENGINEERING
105 School Creek Trail
Luxemburg, WI 54217
Phone: 920.845.1042
Fax: 920.845.1048
www.rice-inc.com

Florida Firm No: F-01000005061
Certificate of Authorization: #9090
L. David Rice
Registration No: 50923

GREENHECK
FAN CORP. 4646 SCHOFIELD, WISCONSIN 54476-0403

DRAWN BY	YAKLOVICH
DATE	12/22/2008
SCALE	1/4.5
DWG NUMBER NO.	HUF1007

TITLE: SWB–106–224
SFD–6–10
SFB–9–25
SHEET 7 OF 7