MIAMI-DADE COUNTY
BUILDING CODE COMPLIANCE OFFICE (BCCO)
PRODUCT CONTROL DIVISION

MIAMI-DADE COUNTY, FLORIDA
METRO-DADE FLAGLER BUILDING
140 WEST FLAGLER STREET, SUITE 1603
MIAMI, FLORIDA 33130-1563
(305) 375-2901 FAX (305) 372-6339
www.miamidade.gov/buildingcode

NOTICE OF ACCEPTANCE (NOA)

Parex Lahabra, Inc.
PO Box 189
Redan, GA 30074

SCOPE: This NOA is being issued under the applicable rules and regulations governing the use of construction materials. The documentation submitted has been reviewed by Miami-Dade County Product Control Division and accepted by the Board of Rules and Appeals (BORA) to be used in Miami Dade County and other areas where allowed by the Authority Having Jurisdiction (AHJ).

This NOA shall not be valid after the expiration date stated below. The Miami-Dade County Product Control Division (In Miami Dade County) and/or the AHJ (in areas other than Miami Dade County) reserve the right to have this product or material tested for quality assurance purposes. If this product or material fails to perform in the accepted manner, the manufacturer will incur the expense of such testing and the AHJ may immediately revoke, modify, or suspend the use of such product or material within their jurisdiction. BORA reserves the right to revoke this acceptance, if it is determined by Miami-Dade County Product Control Division that this product or material fails to meet the requirements of the applicable building code.

This product is approved as described herein, and has been designed to comply with the Florida Building Code, including the High Velocity Hurricane Zone.

DESCRIPTION: EIFS Wall System on Masonry Wall

APPROVAL DOCUMENT: Drawing No. **MD990402**, titled "Wall Substrate No. 4 Concrete Masonry Impact Resistant Substrate", sheets 1 through 5 of 5, dated June 00, with last revision dated Feb 09, prepared by Parex Lahabra, Inc., signed and sealed by Christopher B. Shiver, P.E., bearing the Miami-Dade County Product Control revision stamp with the Notice of Acceptance number and expiration date by the Miami-Dade County Product Control Division.

MISSILE IMPACT RATING: Large and Small Missile Impact Resistant

LABELING: Each unit shall bear a permanent label with the manufacturer's name or logo, city, state and following statement: "Miami-Dade County Product Control Approved", unless otherwise noted herein.

RENEWAL of this NOA shall be considered after a renewal application has been filed and there has been no change in the applicable building code negatively affecting the performance of this product.

TERMINATION of this NOA will occur after the expiration date or if there has been a revision or change in the materials, use, and/or manufacture of the product or process. Misuse of this NOA as an endorsement of any product, for sales, advertising or any other purposes shall automatically terminate this NOA. Failure to comply with any section of this NOA shall be cause for termination and removal of NOA.

ADVERTISEMENT: The NOA number preceded by the words Miami-Dade County, Florida, and followed by the expiration date may be displayed in advertising literature. If any portion of the NOA is displayed, then it shall be done in its entirety.

INSPECTION: A copy of this entire NOA shall be provided to the user by the manufacturer or its distributors and shall be available for inspection at the job site at the request of the Building Official.

This NOA **revises NOA # 07-0727.04** and consists of this page 1 and evidence page E-1, as well as approval document mentioned above.

The submitted documentation was reviewed by **Carlos M. Utrera, P.E.**

MIAMI-DADE COUNTY APPROVED

4/21/09

NOA No. 09-0303.35
Expiration Date: August 06, 2012
Approval Date: May 13, 2009

NOTICE OF ACCEPTANCE: EVIDENCE SUBMITTED

A. DRAWINGS

1. Drawing No. **MD990402**, titled "Wall Substrate No. 4 Concrete Masonry Impact Resistant Substrate", sheets 1 through 5 of 5, dated June 00, with last revision dated Feb 09, prepared by Parex Lahabra, Inc., signed and sealed by Christopher B. Shiver, P.E.

B. TESTS

1. Test reports on 1) Air Infiltration Test, per FBC, TAS 202-94
   2) Uniform Static Air Pressure Test, Loading per FBC TAS 202-94
   3) Water Resistance Test, per FBC, TAS 202-94
   4) Cyclic Wind Pressure Loading per FBC, TAS 203-94

   along with marked-up drawings and installation diagram of an EIFS Wall System on Masonry Wall, prepared by Hurricane Test Laboratory, LLC. Test Report No. **HTL-G153-0517-07**, dated 06/20/07, signed and sealed by Vinu J. Abraham, P.E.
   "Submitted under NOA # 07-0727.04"

C. CALCULATIONS

1. Anchor Calculations prepared by W. W. Schaefer Engineering and Consulting P.A., dated 03/30/98, signed and sealed by W. W. Schaefer, P.E.
   "Submitted under NOA # 06-0712.06"

D. QUALITY ASSURANCE

1. Miami Dade Building Code Compliance Office (BCCO).

E. MATERIAL CERTIFICATIONS

1. Notice of Acceptance No. **07-1107.08**, issued to Dyplast Products, LLC. for the EPS Block Type Insulation, approved on 02/28/08 and expiring on 01/11/12.

F. STATEMENTS

1. Statement letter of no change, issued by ParexLahabra, Inc., dated 07/18/07, signed by Peter Harrison.
2. Laboratory compliance letter for Test Report No. **HTL-G153-0517-07**, issued by Hurricane Test Laboratory, LLC, dated 06/20/07, signed and sealed by Vinu J. Abraham, P.E.
   "Submitted under NOA # 07-0727.04"
3. Certificate of agreement and plan of merger of Parex, Inc., and Lahabra Products, Inc., dated 12/31/04, signed by Francois Bouan and John Comiskey.
   "Submitted under NOA # 06-0712.06"

4/21/09

Carlos M. Utrera, P.E.
Product Control Examiner
NOA No. 09-0303.35
Expiration Date: August 06, 2012
Approval Date: May 13, 2009

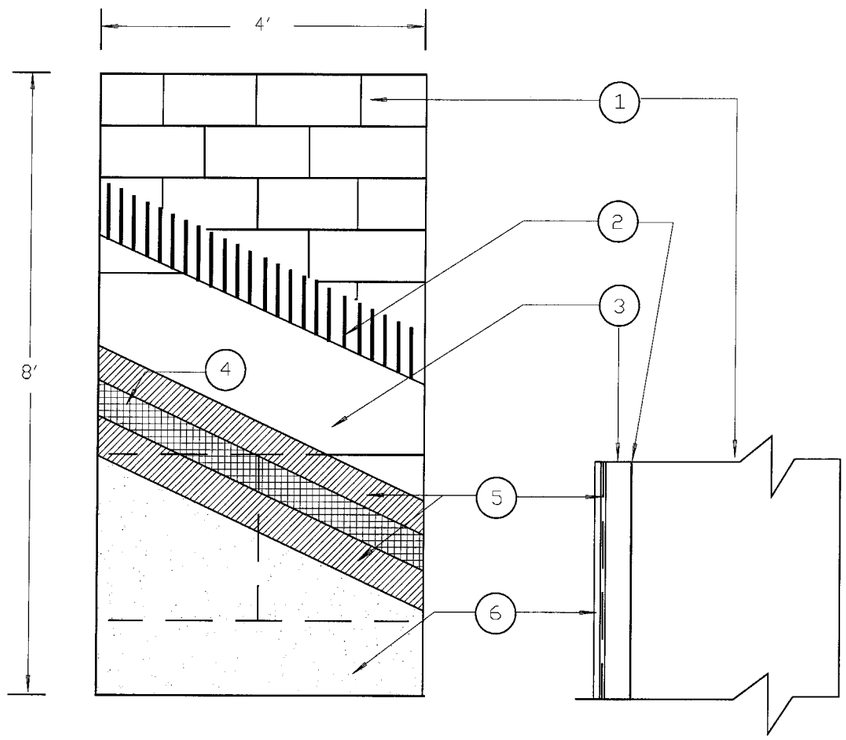

ELEVATION OF
TESTED UNIT
NOT TO SCALE

ALLOWABLE DESIGN PRESSURE	
POSITIVE (PSF)	NEGATIVE (PSF)
150	150
INSTALLED OVER AN IMPACT RESISTANT SUBSTRATE	

MATERIAL LIST

SUBSTRATE

1. CONCRETE MASONRY STRUCTURE FABRICATED FROM (ASTM C 90) 8-INVH CMU AND TYPE S MORTAR (ASTM C270) PER THE HVHZ REQUIREMENTS OF THE FLORIDA BUILDING CODE 2007 FOR CBS CONSTRUCTION

EIF SYSTEM

2. PAREX BASE COAT/ADHESIVE 121 APPLY WITH 5/16" X 5/16" NOTCHED TROWEL PARALLEL TO LONG DIMENSION OF INSULATION BOARD.

3. DYPLAST EPS INSULATION BOARD 1 INCH THICK AND DENSITY OF 1 POUND PER CUBIC FOOT. AFTER COATING WITH ADHESIVE, APPLY WITH PRESSURE TO MASONRY SURFACE HORIZONTALLY WITH STAGGERED JOINTS.

4. PAREX STANDARD MESH 355 OPEN WEAVE FIBERGLASS REINFORCING FABRIC, 4.5 OUNCES PER SQUARE YARD, EMBEDDED IN PAREX BASE COAT ADHESIVE 121. MESH STRIPS ARE LAPPED BY 2 1/2"

5. PAREX BASE COAT/ADHESIVE 121 APPLY A LAYER OF 1/16" THICK TO EXPOSED SURFACE OF THE EPS INSULATION BOARD USING A S.S. TROWEL. THE MESH IS EMBEDDED IN THE WET BASE COAT BY TROWELING FROM THE CENTER TO THE EDGES.

6. PAREX DPR SERIES 500 ACRYLIC TEXTURED FINISH. IT IS READY MIXED WITH A DENSITY OF 1.35 GRAMS PER CUBIC CENTIMETER. APPLY AT A NOMINAL THICKNESS OF 1/16" AFTER THE BASE COAT IS DRIED.

GENERAL NOTES:

1. THIS SYSTEM HAS BEEN DESIGNED IN ACCORDANCE WITH THE FLORIDA BUILDING CODE 2007 EDITION AND AND ITS LATEST REVISIONS FOR USE IN THE HIGH VELOCITY HURRICANE ZONES (HVHZ).
2. THIS SYSTEM HAS BEEN TESTED IN ACCORDANCE WITH FLORIDA PROTOCOLS TAS-202 AND TAS-203 AIR, WATER, STRUCTURAL AND CYCLIC TESTING.
3. THIS SYSTEM SHALL BE APPLIED BY A LICENSED PLASTERING CONTRACTOR, FOLLOWING THIS NOTICE OF ACCEPTANCE, THE RECOMMENDATIONS OF PAREXLAHABRA AND THE APPLICABLE SECTIONS OF THE 2007 FLORIDA BUILDING CODE.
4. THE ENGINEER AND/OR ARCHITECT OF RECORD FOR EACH PROJECT USING THIS SYSTEM SHALL DESIGN THE BLOCK WALL TO ENSURE CONFORMANCE WITH ALL GOVERNING CODES AND THIS DOCUMENT.
5. INSULATION BOARDS SHALL BE POSITIONED IN A RUNNING BOND PATTERN.
6. THE BLOCK WALL SURFACE SHALL BE DRY, CLEAN AND FREE OF ALL LOOSE DEBRIS PRIOR TO PLACING THE SYSTEM.
7. DETAILS ON SHEET 2 to 5 OF 5 ARE TYPICAL AND SHOW INTENT TO PREVENT WATER INFILTRATION INTO AND BEHIND THE SYSTEM. ALTERNATE DETAILS AND SPECIFIC CONDITIONS NOT COVERED BY THE TYPICAL DETAILS ARE THE RESPONSIBILITY OF THE LICENSED DESIGN PROFESSIONAL IN CONSULTATION WITH PAREXLAHABA, INC.

PRODUCT REVISED
as complying with the Florida
Building Code
Acceptance No 09-0303.35
Expiration Date 09/06/2012
By
Miami Dade Product Control
Division

Dade County Approval

2-17-2009

ParexLahabra, Inc.
1870 STONE MOUNTAIN/LITHONIA RD
P.O. Box 189 REDAN, GA 30074
(770)482-7872 FAX:(770)482-6878

PAREX STANDARD EIFS

WALL SUBSTRATE NO. 4
CONCRETE MASONRY IMPACT RESISTANT SUBSTRATE

DWG NO. MD990402 | SHEET 1/5

DRAWN BY: ROBERT ROWE
PETER HARRISON | DATE: JUNE 00 | SCALE: NONE

REVISED: JULY 00, JUNE 07, JULY 07

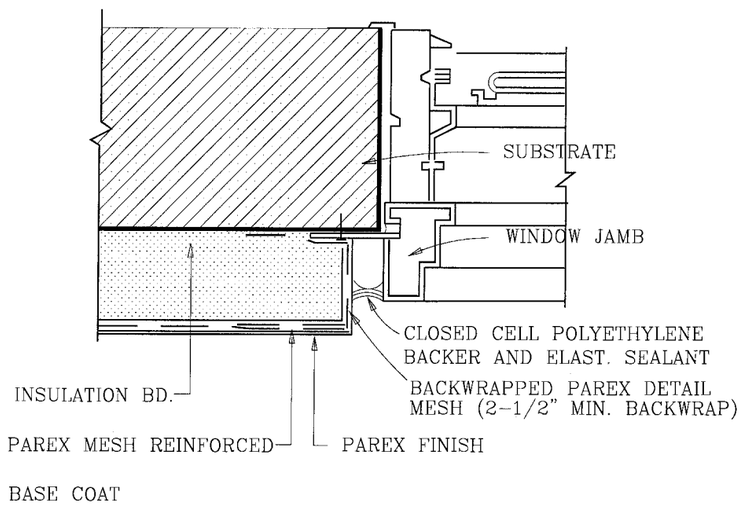

TERMINATION AT RECESSED JAMB

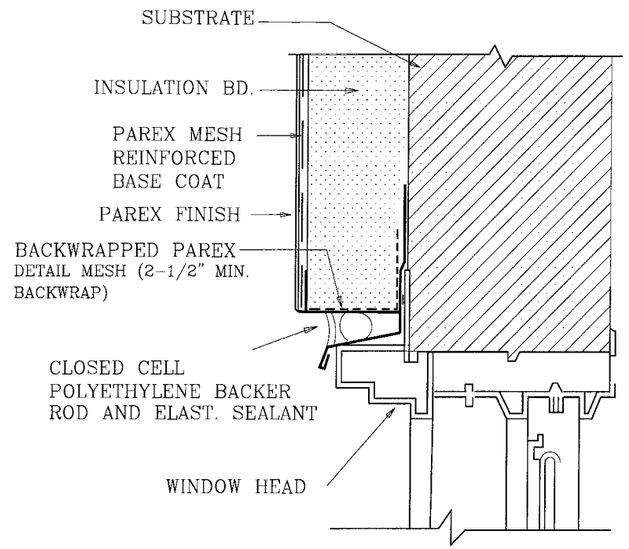

TERMINATION AT RECESSED HEAD

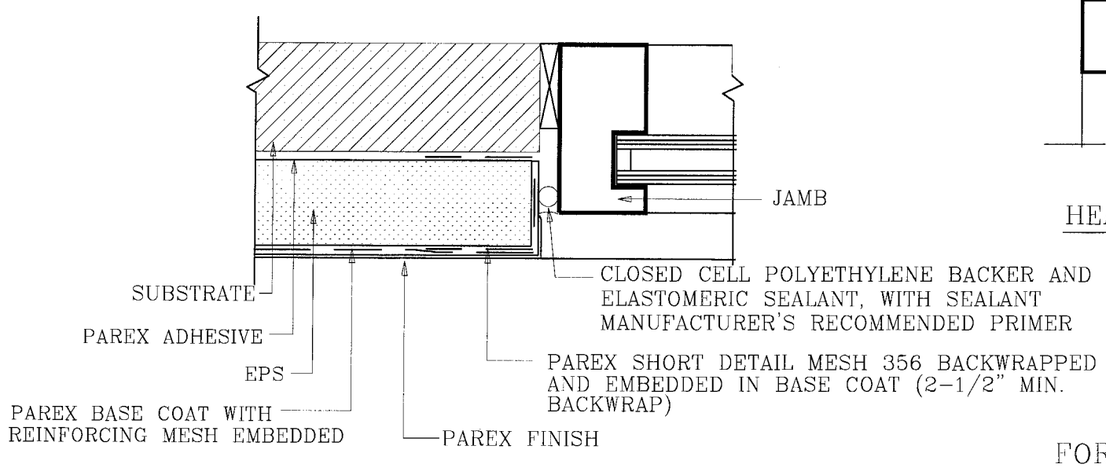

BACKWRAPPED JAMB

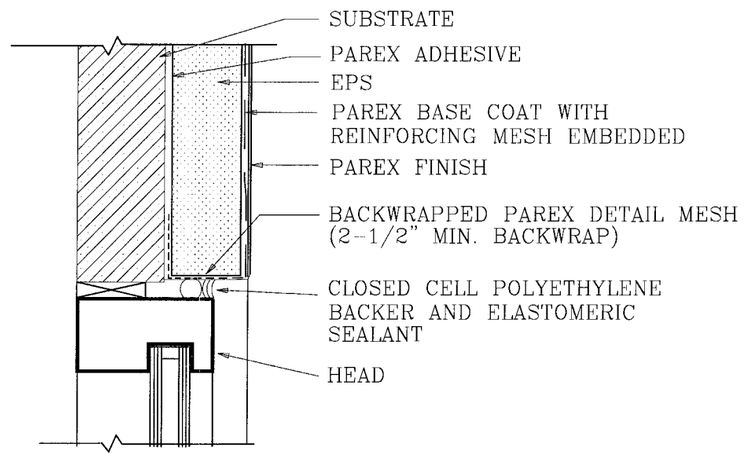

HEAD WITH BACKWRAP

FOR DETAILS OF THE SUBSTRATE AND THE EIF SYSTEM SEE SHEET 1 OF 5

GENERAL DETAIL NOTES:

1. PROVIDE FLASHING AND/OR SEALANTAT ALL TERMINATIONS OF THE PAREX EIF SYSTEM SO AS TO PREVENT WATER INTRUSION BETWEEN THE SYSTEM AND ADJACENT CONSTRUCTION.
2. WINDOWS AND DOORS SHALL CONFORM TO THE F.B.C.
3. FLASHING MATERIALS SHALL CONFORM TO THE F.B.C.
4. PAN FLASHINGS AT SILLS SHALL HAVE UP-TURNED END DAMS WITH WATERTIGHT SEAMS.
5. FLASHING SECTIONS SHALL BE JOINED WITH WATERTIGHT SEAMS.
6. BACKER ROD AND SEALANT JOINTS AT EIF SYSTEM TERMINATIONS SHALL BE CAULKED WITH ELASTOMERIC SEALANT CAPABLE OF 50% EXTENSION AND 50% COMPRESSION OF INSTALLED WIDTH OF NOT LESS THAN 1/2".
7. BACKER ROD AND SEALANT JOINTS AT EXPANSION JOINTS IN THE EIF SYSTEM SHALL BE CAULKED WITH SEALANT CAPABLE OF 100% ELONGATION AND 50% COMPRESSION OF INSTALLED WIDTH OF NOT LESS THAN 3/4".
8. BACKER ROD SHALL BE CLOSED-CELL POLYETHYLENE.
9. APPLY SEALANTS TO DRY EIF SYSTEM BASE COAT.
10. FOLLOW SEALANT MANUFACTURER'S INSTALLATION INSTRUCTIONS.
11. ALL EIF SYSTEM EDGES SHALL BE TERMINATED BY BACK-WRAPPED FIBERGLASS MESH AND BASE COAT OR TO EXTERIOR GRADE RIGID PVC EXTRUSIONS TO PROVIDE A SUBSTRATE FOR SEALANT.
12. BASE COAT APPLICATION ON EIF SYSTEM EDGES SHALL COMPLETELY EMBED THE FIBERGLASS MESH AND PROVIDE A SMOOTH UNIFORM SURFACE FOR THE APPLICATION OF SEALANT.

PRODUCT REVISED
as complying with the Florida Building Code
Acceptance No 09-0303.35
Expiration Date 08/06/2012
By
Miami Dade Product Control Division

Dade County Approval

2-17-2009

ParexLahabra, Inc.	1870 STONE MOUNTAIN/LITHONIA RD P.O. Box 189 REDAN, GA 30074 (770)482-7872 FAX:(770)482-6878

PAREX STANDARD EIFS

WALL SUBSTRATE NO. 4
CONCRETE MASONRY IMPACT RESISTANT SUBSTRATE

DWG NO. MD990402	SHEET 2/5

DRAWN BY: ROBERT ROWE PETER HARRISON	DATE: JUNE 00	SCALE: NONE

REVISED: JULY 00, JUNE 07, JULY 07

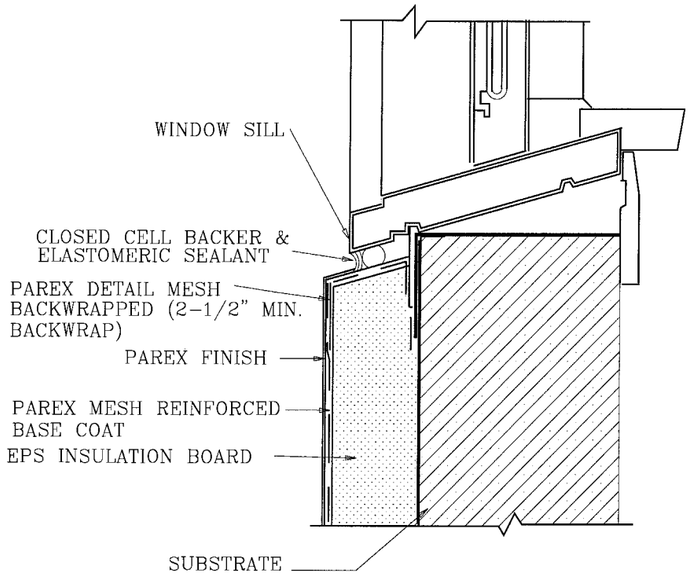

TERMINATION AT RECESSED SILL

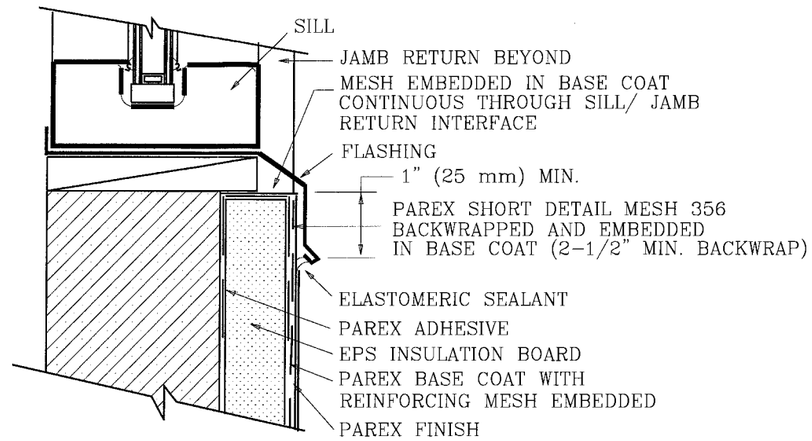

BACKWRAPPED TERMINATION AT SILL

GENERAL DETAIL NOTES:

13. COUNTER-FLASHING INSTALLED OVER UPPER HORIZONTAL TERMINATIONS OF THE EIF SYSTEM SHALL LAP THE SYSTEM SUFFICIENTLY TO PREVENT UPWARD ENTRY OF WIND-DRIVEN RAIN OR SHALL BE SEALED AT ITS LOWER EDGE.
14. PRIMER APPLIED TO THE BASE COAT SHALL BE DRY AT THE TIME THE SEALANT IS APPLIED.
15. MINIMUM LENGTH OF BACKWRAP MESH ATTACHMENT TO THE SUBSTRATE IS 2-1/2" (38 mm).

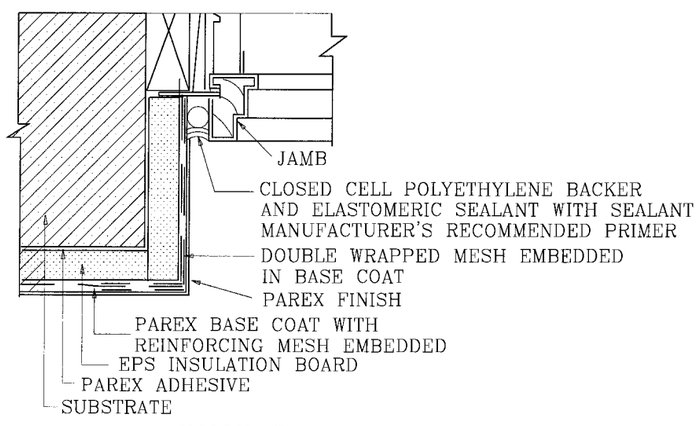

INSULATED JAMB RETURN

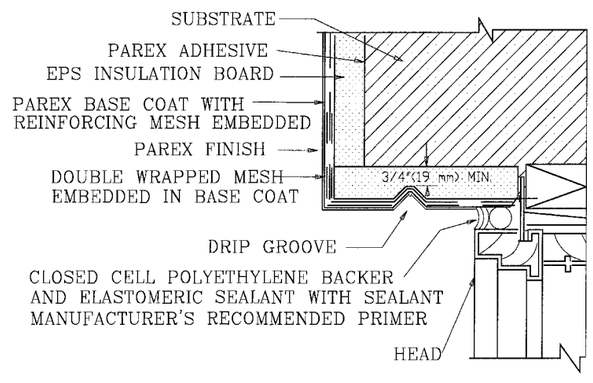

INSULATED HEAD RETURN

FOR DETAILS OF THE SUBSTRATE AND THE EIF SYSTEM SEE SHEET 1 OF 5

PRODUCT REVISED
as complying with the Florida Building Code
Acceptance No 09-0303.35
Expiration Date 08/06/2012
By
Miami/Dade Product Control Division

Dade County Approval 2-17-2009

ParexLahabra, Inc.
1870 STONE MOUNTAIN/LITHONIA RD
P.O. Box 189 REDAN, GA 30074
(770)482-7872 FAX:(770)482-6878

PAREX STANDARD EIFS

WALL SUBSTRATE NO. 4
CONCRETE MASONRY IMPACT RESISTANT SUBSTRATE

DWG NO. MD990402 | SHEET 3/5

DRAWN BY: ROBERT ROWE, PETER HARRISON | DATE: JUNE 00 | SCALE: NONE

REVISED: JULY 00, JUNE 07, JULY 07

FOR GENERAL DETAIL NOTES,
REFER TO SHEETS 2 & 3 OF 5

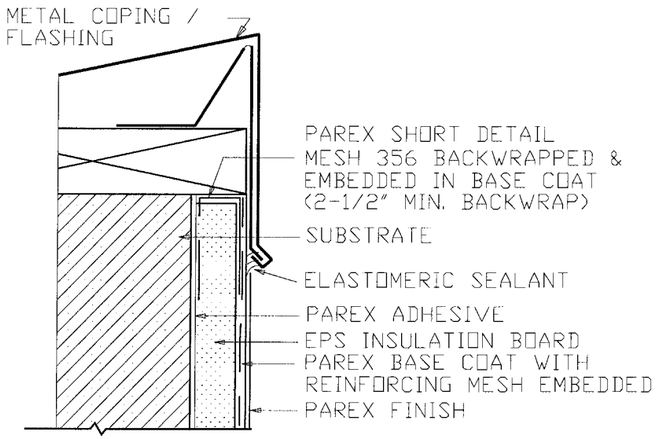

PARAPET

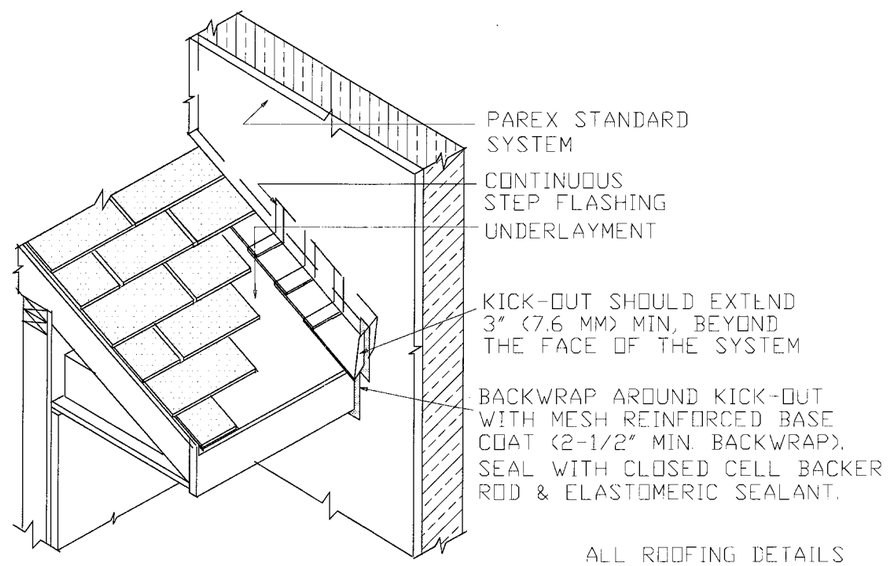

INTERSECTION OF ROOF AT WALL

ALL ROOFING DETAILS MUST COMPLY WITH CHAPTER 15 OF THE 2004 FLORIDA BUILDING CODE

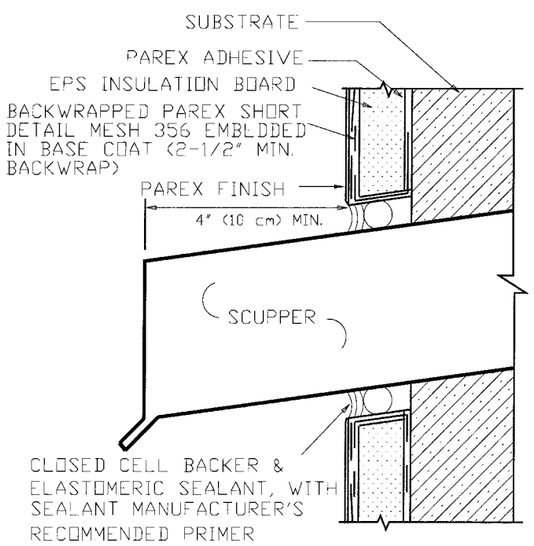

SCUPPER

FOR DETAILS OF THE SUBSTRTATE AND THE EIF SYSTEM SEE SHEET 1 OF 5

PRODUCT REVISED
as complying with the Florida Building Code
Acceptance No 07-0303.35
Expiration Date 08/06/2012
By _____
Miami Dade Product Control Division

Dade County Approval 2-17-2009

ParexLahabra, Inc.
1870 STONE MOUNTAIN/LITHONIA RD
P.O. Box 189 REDAN, GA 30074
(770)482-7872 FAX:(770)482-6878

PAREX STANDARD EIFS

WALL SUBSTRATE NO. 4
CONCRETE MASONRY IMPACT RESISTANT SUBSTRATE

DWG NO. MD990402 | SHEET 4/5

DRAWN BY: ROBERT ROWE, PETER HARRISON | DATE: JUNE 00 | SCALE: NONE

REVISED: JULY 00, JUNE 07, JULY 07

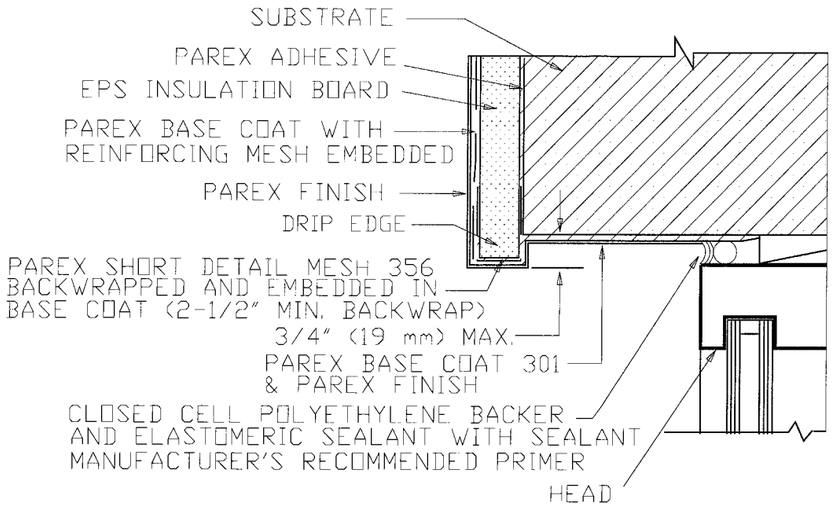

UNINSULATED HEAD RETURN

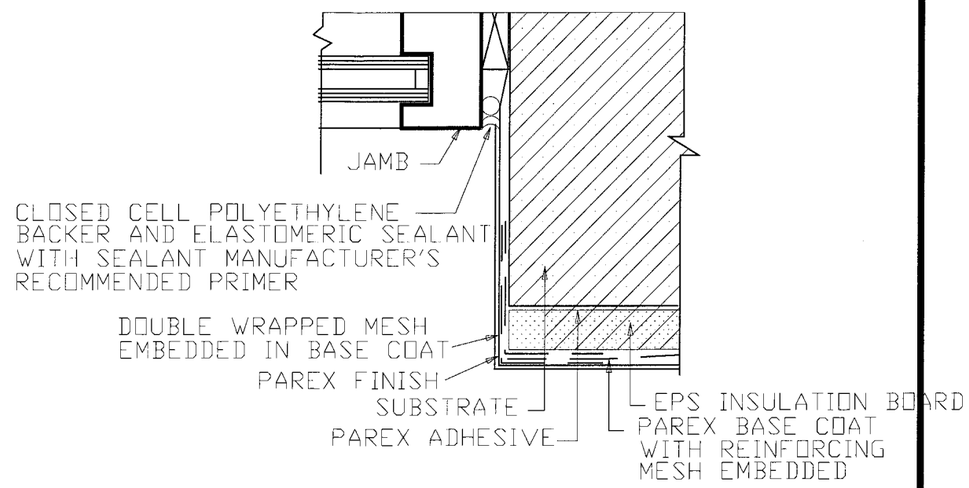

UNINSULATED JAMB RETURN

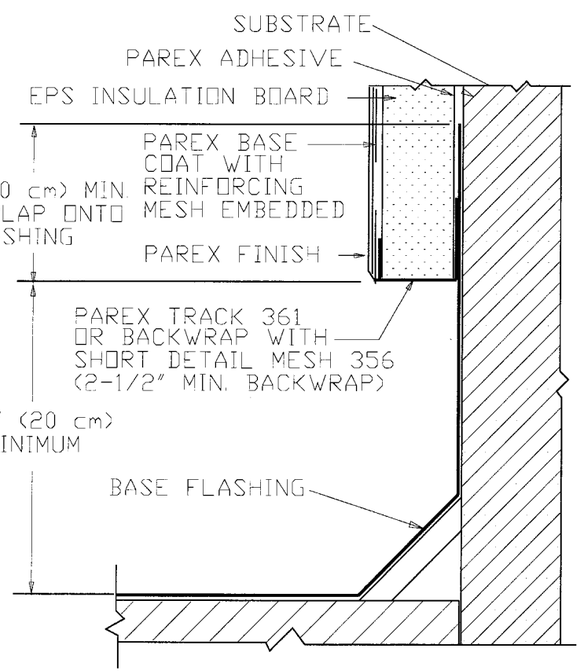

HIGH WALL AT LOW ROOF

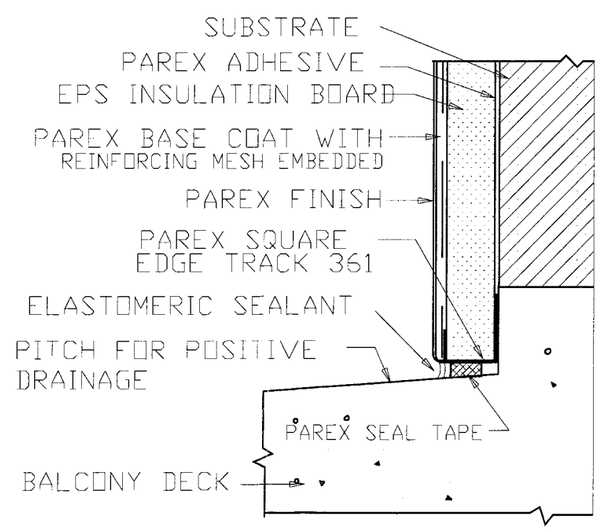

TERMINATION AT BALCONY DECK

FOR DETAILS OF THE SUBSTRTATE AND THE EIF SYSTEM SEE SHEET 1 OF 5

FOR GENERAL DETAIL NOTES, REFER TO SHEETS 2 & 3 OF 5

PRODUCT REVISED
as complying with the Florida Building Code
Acceptance No. 09-0303.35
Expiration Date 08/06/2012
By
Miami Dade Product Control Division

Dade County Approval 2-17-2009

ParexLahabra, Inc.
1870 STONE MOUNTAIN/LITHONIA RD
P.O. Box 189 REDAN, GA 30074
(770)482-7872 FAX:(770)482-6878

PAREX STANDARD EIFS

WALL SUBSTRATE NO. 4
CONCRETE MASONRY IMPACT RESISTANT SUBSTRATE

DWG NO. MD990402 | SHEET 5/5

DRAWN BY: ROBERT ROWE, PETER HARRISON | DATE: JUNE 00 | SCALE: NONE

REVISED: JULY 00, JUNE 07, JULY 07