MIAMI-DADE

BUILDING CODE COMPLIANCE OFFICE (BCCO)
PRODUCT CONTROL DIVISION

MIAMI-DADE COUNTY, FLORIDA
METRO-DADE FLAGLER BUILDING
140 WEST FLAGLER STREET, SUITE 1603
MIAMI, FLORIDA 33130-1563
(305) 375-2901 FAX (305) 375-2908

NOTICE OF ACCEPTANCE (NOA)

TAMKO Building Products, Inc.
220 West Fourth Street
Joplin, MO. 64802

SCOPE: This NOA is being issued under the applicable rules and regulations governing the use of construction materials. The documentation submitted has been reviewed by the BCCO and accepted by the Building Code and Product Review Committee to be used in Miami Dade County and other areas where allowed by the Authority Having Jurisdiction (AHJ).

This NOA shall not be valid after the expiration date stated below. The Miami-Dade County Product Control Division (In Miami Dade County) and/or the AHJ (in areas other than Miami Dade County) reserve the right to have this product or material tested for quality assurance purposes. If this product or material fails to perform in the accepted manner, the manufacturer will incur the expense of such testing and the AHJ may immediately revoke, modify, or suspend the use of such product or material within their jurisdiction. BORA reserves the right to revoke this acceptance, if it is determined by Miami-Dade County Product Control Division that this product or material fails to meet the requirements of the applicable building code.

This product is approved as described herein, and has been designed to comply with the Florida Building Code, including the High Velocity Hurricane Zone of the Florida Building Code.

DESCRIPTION: Lamarite Slate, Lamarite Shake, Lamarite Slate Diamond, Lamarite Slate Scallop

LABELING: Each unit shall bear a permanent label with the manufacturer's name or logo, city, state and following statement: "Miami-Dade County Product Control Approved", unless otherwise noted herein.

RENEWAL of this NOA shall be considered after a renewal application has been filed and there has been no change in the applicable building code negatively affecting the performance of this product.

TERMINATION of this NOA will occur after the expiration date or if there has been a revision or change in the materials, use, and/or manufacture of the product or process. Misuse of this NOA as an endorsement of any product, for sales, advertising or any other purposes shall automatically terminate this NOA. Failure to comply with any section of this NOA shall be cause for termination and removal of NOA.

ADVERTISEMENT: The NOA number preceded by the words Miami-Dade County, Florida, and followed by the expiration date may be displayed in advertising literature. If any portion of the NOA is displayed, then it shall be done in its entirety.

INSPECTION: A copy of this entire NOA shall be provided to the user by the manufacturer or its distributors and shall be available for inspection at the job site at the request of the Building Official.

This renews NOA# 06-0605.03 consists of pages 1 through 10.
The submitted documentation was reviewed by Alex Tigera.

MIAMI-DADE COUNTY APPROVED

ROOFING ASSEMBLY APPROVAL

Category:	Roofing
Sub-Category:	Slate
Materials	Composite
Deck Type:	Wood
Maximum Design Pressure	**–82.5 psf**
Fire Classificationn Pressure	See General Limitation #1

TRADE NAMES OF PRODUCTS MANUFACTURED OR LABELED BY APPLICANT:

Product	Dimensions	Test Specifications	Product Description
Lamarite Slate	18" long 5", 7" & 12" width ¼" thick	TAS 110	Slate looking composite shingle with tapered back.
Lamarite Slate Diamond	18" long 12" width ¼" thick	TAS 110	Slate looking diamond shape composite shingle with tapered back.
Lamarite Slate Scallop	18" long 12" width ¼" thick	TAS 110	Slate looking scallop shape composite shingle with tapered back.
Lamarite Shake	18" long 5", 7" & 12" width ¼" thick	TAS 110	Shake looking composite shingle.

EVIDENCE SUBMITTED:

Test Agency	Test Identifier	Test Name/Report	Date
PRI Asphalt Technologies	TAM-083-02-01	TAS 100	07/07/03
	TAM-102-02-01	TAS 100	12/04/03
	TAP-161-02-01	TAS 100	05/03/06
	TAP-160-02-01	TAS 100	04/25/06
	TAM-096-02-01	ASTM G 96	04/15/04
ETC Laboratories	ETC-718-14328.0	ASTM D 1929 ASTM D 2843	10/23/03
Underwriters Laboratories, Inc.	00NK49854	UL 790	12/20/02
	03NK27560	UL 580	10/14/03
	03NK27560	UL 1897	10/14/03
	05NK02569	UL 580	06/03/05
	04NK24658	UL 790	01/28/05
	04NK24658	UL 580	01/28/05

APPROVED SYSTEMS:

Deck Type: Wood, Non-insulated

Deck Description: $^{19}/_{32}$" or greater plywood or wood plank.

Slope Range: 3:12 or greater

Maximum Uplift Pressure: The maximum allowable uplift pressure shall be **–82.5 psf**.

Deck Attachment: In accordance with applicable Building Code, but in no case shall it be less than #8 x 2" wood screws spaced 6" o.c. In reroofing, where the deck is less than $^{19}/_{32}$" thick (Minimum $^{15}/_{32}$") The above attachment method must be in addition to existing attachment.

Underlayment: Underlayment shall be applied in accordance with applicable Building Code. Two plies of ASTM D 226 Type II felt overlapped 19" and 6" end lap. Underlayment shall be installed with minimum 12 ga. corrosion resistant ring shank nails and tin caps, spaced 12" o.c. staggered in the field and 6" o.c. at the laps. Or, any approved underlayment having a current NOA.

Valleys: Valley metal shall be a minimum 16" wide. Valley metal shall be set over a minimum 36" wide sweat sheet of minimum ASTM D 226 type II embedded in roofing cement, or an approved self-adhered membrane. Valley metal shall imbedded in roofing cement and be secure with roofing nails spaced a maximum 4" o.c. at outer most part of metal on each side. Valley edges shall be primed and embed a 6" wide asphalt coated fabric in a 8" wide bed of roofing cement. Place a second coat of roofing cement over the fabric. Valley detail shall be in accordance with the current published manufacturer's literature.

Ridge & Hips: Ridges shall be covered with panels having a width that is approximately the same as the field exposure. Pre-manufactured hip and ridge units are acceptable. Fasten each side of ridge or hip with one 11 ga. corrosion resistant ring shank nails of sufficient length to penetrate through the sheathing $^{3}/_{16}$". See TAMKO's published installation manual for detail.

Starter: Install required starter over the edge a ¼". Fasten each starter with a minimum of two corrosion resistant roofing nails. Nails shall be of sufficient length to penetrate sheathing $^{3}/_{16}$".

Application:

Lamarite Slate, Lamarite Shake, Lamarite Slate Diamond, and Lamarite Slate Scallop shall be installed in accordance with TAMKO's current published installation manual. Lamarite Slate, Lamarite Shake, and Lamarite Slate Scallop shall have a maximum 7-½" exposure **(see Detail 'B').** Lamarite Slate Diamond shall have a 6" exposure **(see Detail 'C').**

Lamarite Slate, Lamarite Shake, and Lamarite Slate Scallop shall be fastened with a minimum of two 11 ga. corrosion resistant ring shank nails through the holes that are positioned below the standard nail locations **(see Detail 'A')** and shall penetrate through underlying panel. Nails shall be of sufficient length to penetrate through the sheathing a minimum of $^{3}/_{16}$".

Lamarite Slate Diamond shall be fastened with a minimum of two 11 ga. corrosion resistant ring shank nails through the standard nail locations on the slate **(see Detail 'A')** and shall penetrate through underlying panel. Nails shall be of sufficient length to penetrate through the sheathing a minimum of $^{3}/_{16}$".

GENERAL LIMITATIONS:

1. Fire classification is not part of this acceptance; refer to a current Approved Roofing Materials Directory for fire ratings of this product.

2. The maximum designed pressure limitation listed shall be applicable to all roof pressure zones (i.e. field, perimeters, and corners). Neither rational analysis, nor extrapolation shall be permitted for enhanced fastening at enhanced pressure zones (i.e. perimeters, extended corners and corners).

3. All panels and clips shall be permanently labeled with the manufacturer's name or logo, city, state and the following statement: "Miami Dade County Product Control Approved".

4. All products listed herein shall have a quality assurance audit in accordance with the Florida Building Code and Rule 9B-72 of the Florida Administrative Code.

DRAWINGS
DETAIL A

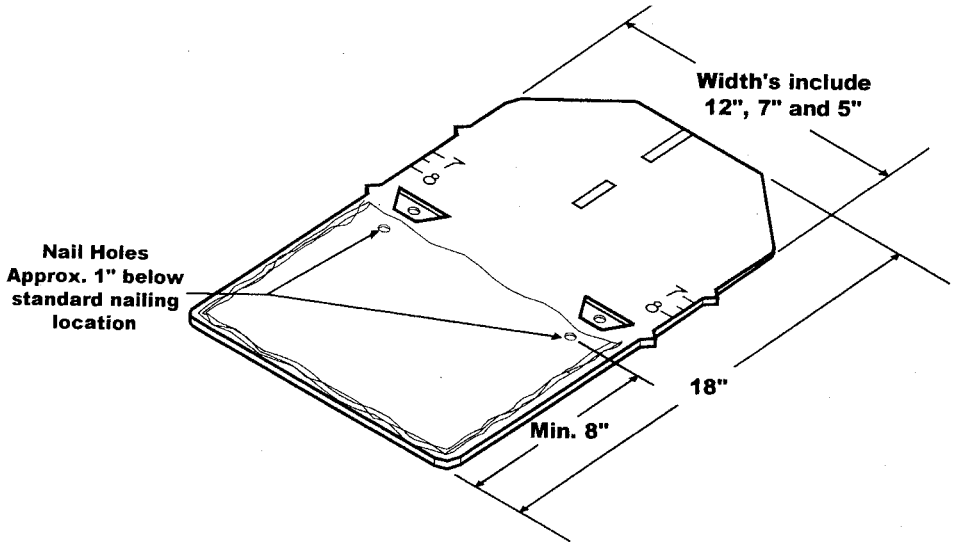

LAMARITE SLATE

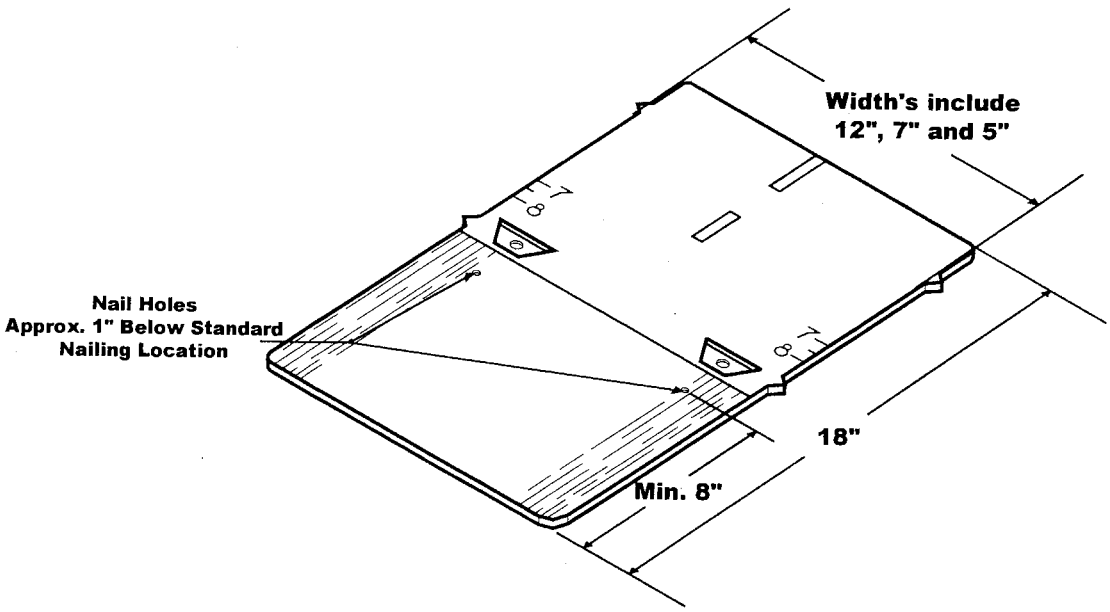

LAMARITE SHAKE

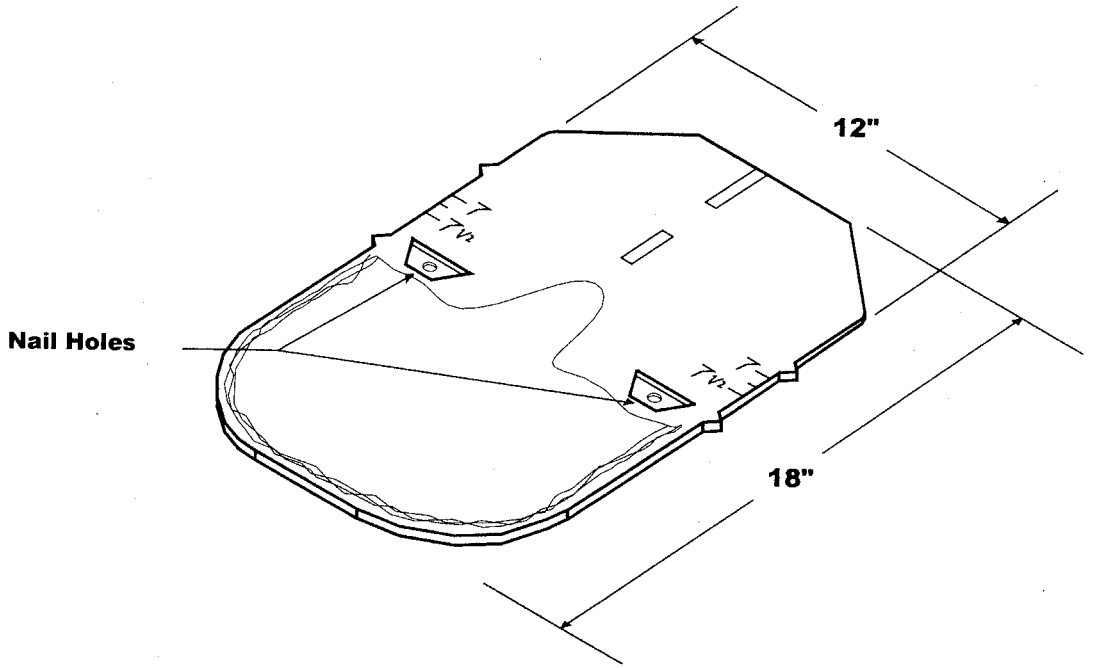

LAMARITE SLATE SCALLOP

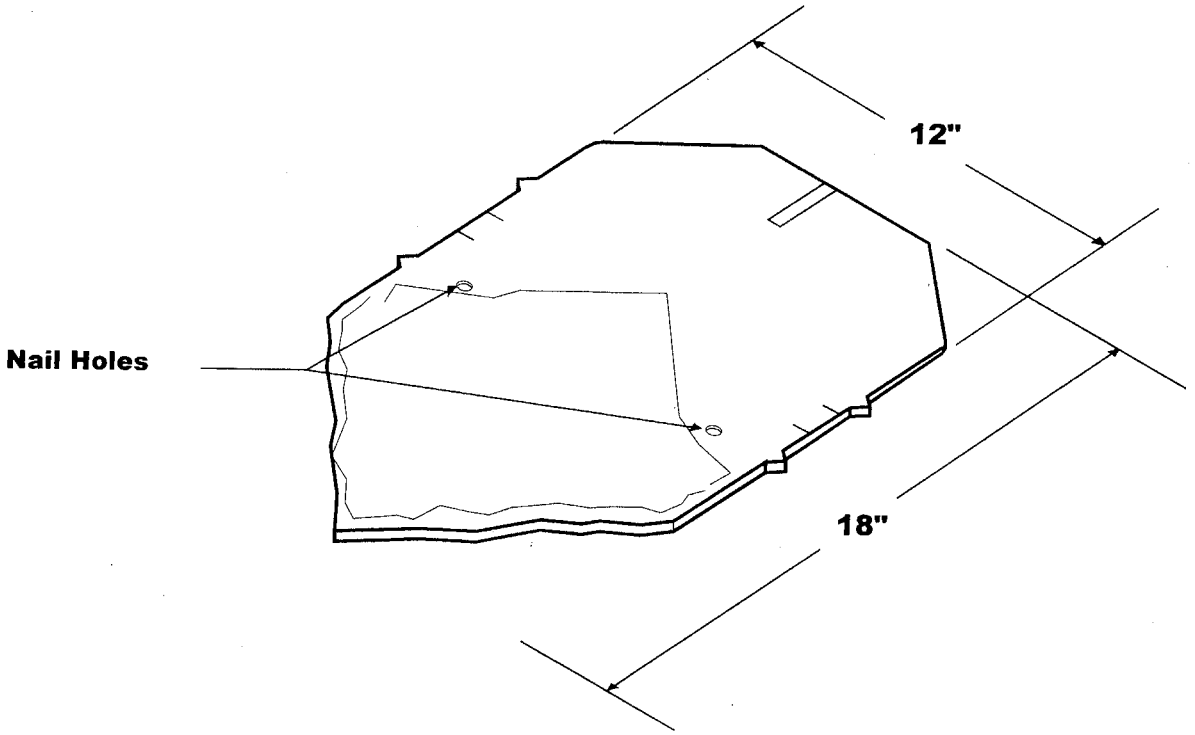

LAMARITE SLATE DIAMOND

DETAIL 'B'

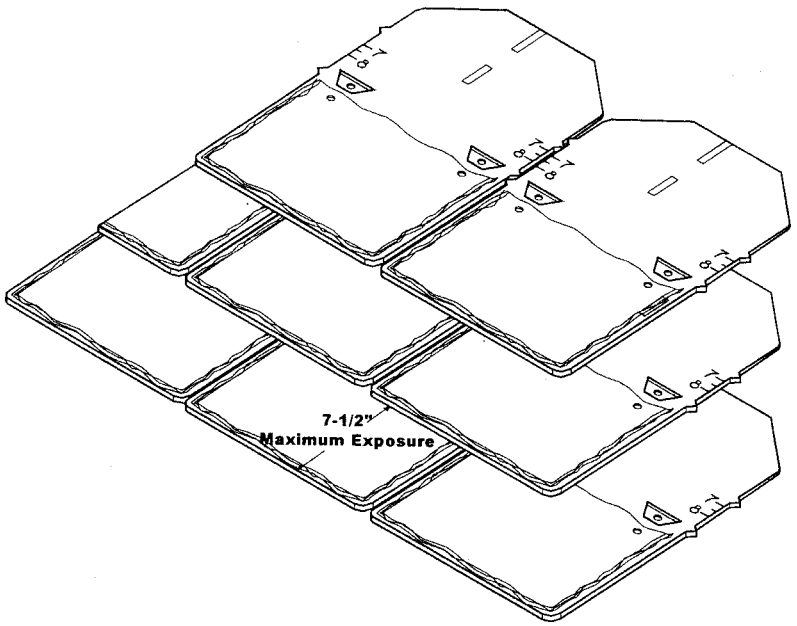

LAMARITE SLATE LAYOUT

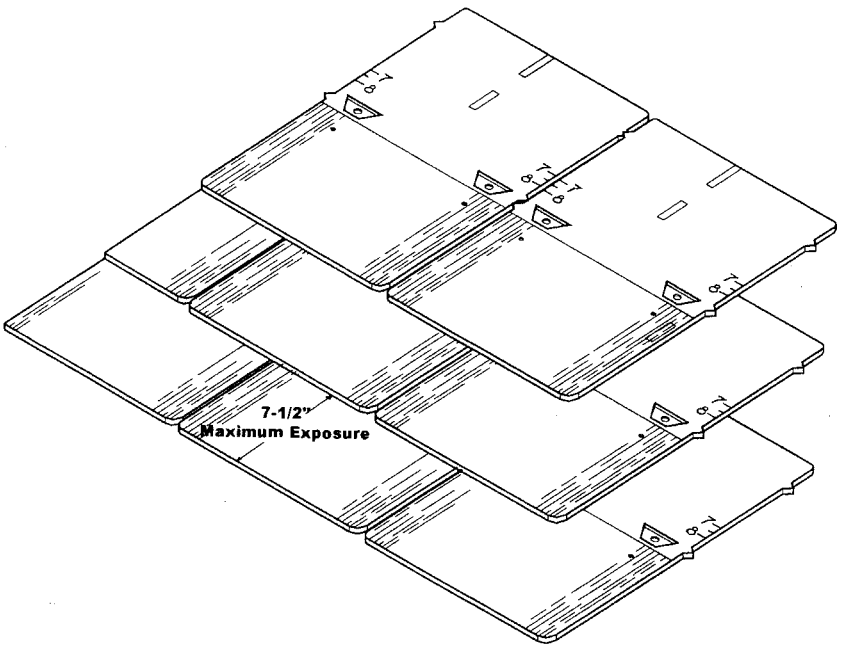

LAMARITE SHAKE LAYOUT

DETAIL 'B' (CONT...)

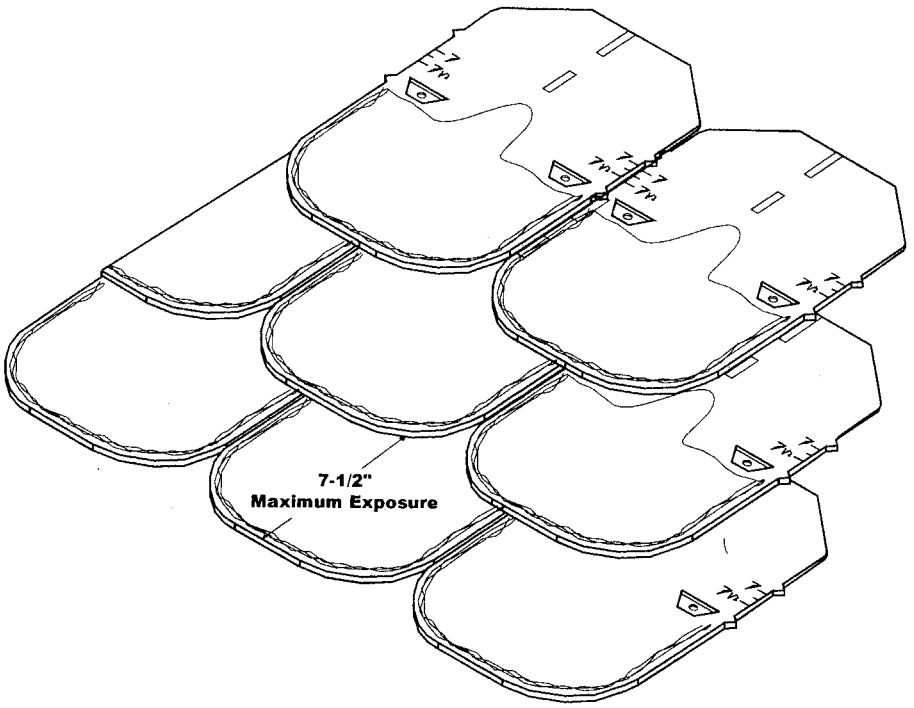

LAMARITE SLATE SCALLOP LAYOUT

DETAIL 'C'

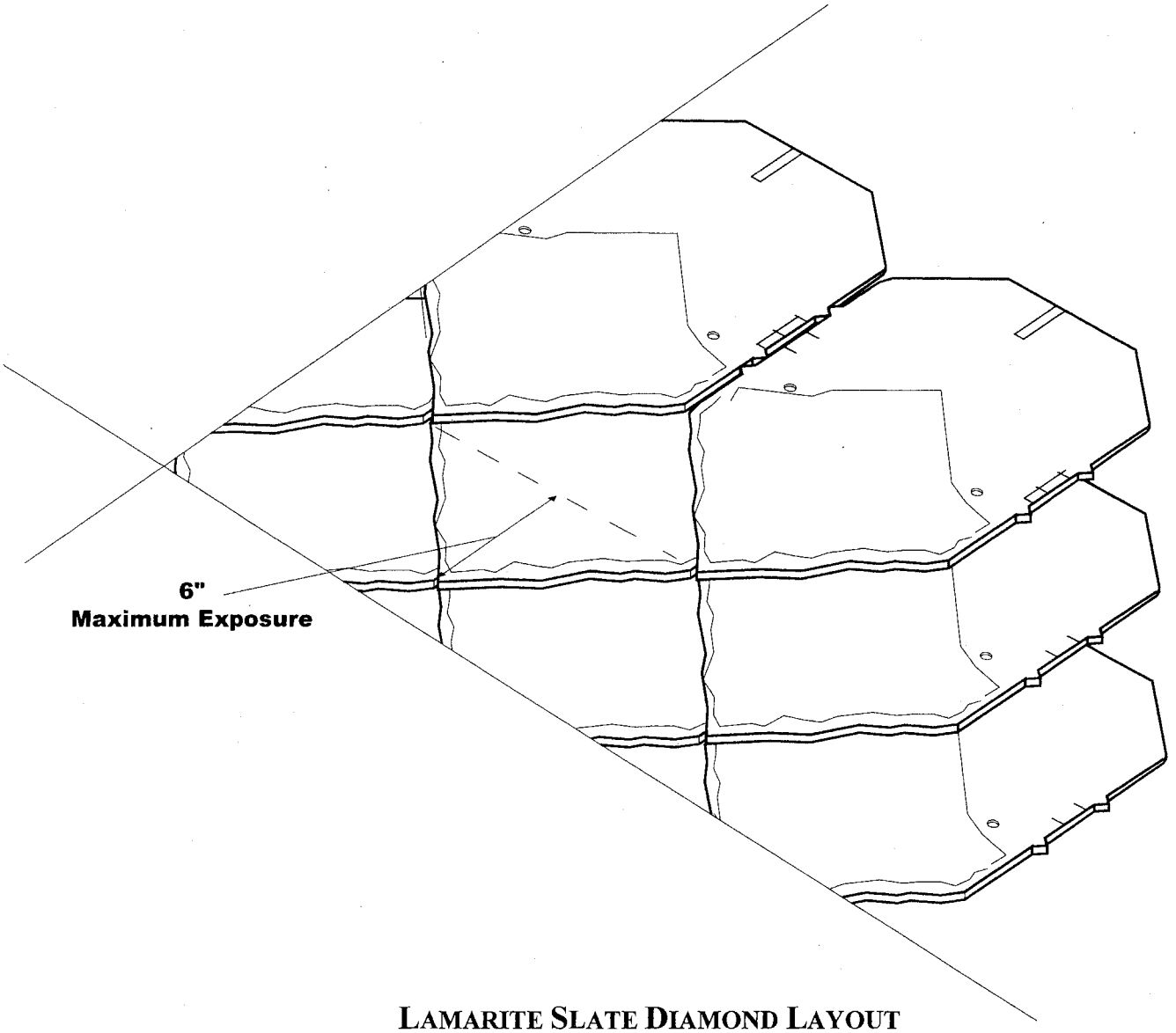

LAMARITE SLATE DIAMOND LAYOUT

END OF THIS ACCEPTANCE