MIAMI-DADE COUNTY
BUILDING CODE COMPLIANCE OFFICE (BCCO)
PRODUCT CONTROL DIVISION

MIAMI-DADE COUNTY, FLORIDA
METRO-DADE FLAGLER BUILDING
140 WEST FLAGLER STREET, SUITE 1603
MIAMI, FLORIDA 33130-1563
(305) 375-2901 FAX (305) 372-6339
www.miamidade.gov/buildingcode

NOTICE OF ACCEPTANCE (NOA)

The Miller Clapperton Partnership, Inc.
7948 Second Flag Drive
Austell, GA 30168

SCOPE:

This NOA is being issued under the applicable rules and regulations governing the use of construction materials. The documentation submitted has been reviewed by Miami-Dade County Product Control Division and accepted by the Board of Rules and Appeals (BORA) to be used in Miami Dade County and other areas where allowed by the Authority Having Jurisdiction (AHJ).

This NOA shall not be valid after the expiration date stated below. The Miami-Dade County Product Control Division (In Miami Dade County) and/or the AHJ (in areas other than Miami Dade County) reserve the right to have this product or material tested for quality assurance purposes. If this product or material fails to perform in the accepted manner, the manufacturer will incur the expense of such testing and the AHJ may immediately revoke, modify, or suspend the use of such product or material within their jurisdiction. BORA reserves the right to revoke this acceptance, if it is determined by Miami-Dade County Product Control Division that this product or material fails to meet the requirements of the applicable building code.

This product is approved as described herein, and has been designed to comply with the Florida Building Code, including the High Velocity Hurricane Zone.

DESCRIPTION: Hurricane Wall Panels – L.M.I.

APPROVAL DOCUMENT: Drawings No. **MCP 100**, titled "Hurricane Wall Panels", sheets 1 through 9 of 9, dated 03/20/06, with revision dated 04/30/09, prepared by The Miller-Clapperton Partnership, Inc., signed and sealed by Brad Beczkalo, P.E., bearing the Miami-Dade County Product Control approval stamp with the Notice of Acceptance number and approval date by the Miami-Dade County Product Control Division.

MISSILE IMPACT RATING: Large and Small Missile Impact Resistant

LABELING: Each unit shall bear a permanent label with the manufacturer's name or logo, city, state and following statement: "Miami-Dade County Product Control Approved", unless otherwise noted herein.

RENEWAL of this NOA shall be considered after a renewal application has been filed and there has been no change in the applicable building code negatively affecting the performance of this product.

TERMINATION of this NOA will occur after the expiration date or if there has been a revision or change in the materials, use, and/or manufacture of the product or process. Misuse of this NOA as an endorsement of any product, for sales, advertising or any other purposes shall automatically terminate this NOA. Failure to comply with any section of this NOA shall be cause for termination and removal of NOA.

ADVERTISEMENT: The NOA number preceded by the words Miami-Dade County, Florida, and followed by the expiration date may be displayed in advertising literature. If any portion of the NOA is displayed, then it shall be done in its entirety.

INSPECTION: A copy of this entire NOA shall be provided to the user by the manufacturer or its distributors and shall be available for inspection at the job site at the request of the Building Official.

This NOA consists of this page 1 and evidence pages E-1, as well as approval document mentioned above.

The submitted documentation was reviewed by **Carlos M. Utrera, P.E.**

MIAMI-DADE COUNTY APPROVED

6/11/09

NOA No. 09-0323.17
Expiration Date: July 01, 2014
Approval Date: July 01, 2009

NOTICE OF ACCEPTANCE: EVIDENCE SUBMITTED

A. DRAWINGS

1. Drawings No. **MCP 100**, titled "Hurricane Wall Panels", sheets 1 through 9 of 9, dated 03/20/06, with revision dated 04/30/09, prepared by The Miller-Clapperton Partnership, Inc., signed and sealed by Brad Beczkalo, P.E.

B. TESTS

1. Test reports on 1) Uniform Static Air Pressure Test, Loading per FBC TAS 202-94
   2) Cyclic Wind Pressure Loading per FBC, TAS 203-94
   along with marked-up drawings and installation diagram of Composite Hurricane Wall Panels, prepared by Hurricane Test Laboratory, LLC, Test Report No. **0508-0706-08**, dated 01/08/09, signed and sealed by Vinu J. Abraham, P.E.
2. Test reports on 1) Uniform Static Air Pressure Test, Loading per FBC TAS 202-94
   2) Cyclic Wind Pressure Loading per FBC, TAS 203-94
   along with marked-up drawings and installation diagram of Composite Hurricane Wall Panels, prepared by Hurricane Test Laboratory, LLC, Test Report No. **G508-0401-08**, dated 01/08/09, signed and sealed by Vinu J. Abraham, P.E.
3. Test reports on 1) Air Infiltration Test, per FBC, TAS 202-94
   2) Uniform Static Air Pressure Test, Loading per FBC TAS 202-94
   3) Water Resistance Test, per FBC, TAS 202-94
   4) Cyclic Wind Pressure Loading per FBC, TAS 203-94
   along with marked-up drawings and installation diagram of Composite Hurricane Wall Panels, prepared by Hurricane Test Laboratory, LLC, Test Report No. **G508-0401-08**, dated 01/08/09, signed and sealed by Vinu J. Abraham, P.E.

C. CALCULATIONS

1. Composite panel calculations, prepared by BLB Consulting, Inc., dated 03/17/09, signed and sealed by Brad Beczkalo, P.E.

D. QUALITY ASSURANCE

1. Miami Dade Building Code Compliance Office (BCCO)

E. MATERIAL CERTIFICATIONS

1. None.

F. STATEMENTS

1. Statement letter of code conformance and no financial interest issued by BLB Consulting, Inc., dated 03/17/09, signed and sealed by Brad Beczkalo, P.E.

6/11/09

Carlos M. Utrera, P.E.
Product Control Examiner
NOA No. 09-0323.17
Expiration Date: July 01, 2014
Approval Date: July 01, 2009

COMPOSITE HURRICANE WALL PANEL SYSTEMS FOR FLORIDA BUILDING CODE LARGE MISSLE

GENERAL NOTES

1. COMPOSITE PANELS SHALL BE USED FOR WALL CONSTRUCTION ONLY. EACH ACTUAL WALL PROJECT SHALL BE CONSTRUCTED USING THE DETAILS SHOWN ON THESE DRAWINGS AS MINIMUM REQUIRED SPECIFICATIONS

2. THE WALL DESIGN ALLOWABLE PRESSURES FOR THESE WALL PANEL SYSTEMS ARE +120.0 PSF / −120.0 PSF

3. STUD DEFLECTION CRITERIA: L/180

4. PANEL DEFLECTION CRITERIA: L/180

1. COMPOSITE WALL PANEL SYSTEMS ARE TESTED IN ACCORDANCE WITH THE FOLLOWING PROTOCOLS:
TAS−202−94 UNIFORM STATIC AIR PRESSURE TEST
TAS−201−94 SMALL & LARGE MISSILE IMPACT TEST
TAS−203−94 CYCLIC WIND PRESSURE TEST

Approved as complying with the Florida Building Code
Date 07/01/2009
NOA# 09-0323.17
Miami Dade Product Control Division
By

Brad Beczkalo

P.E.# 39702 05/06/09

ENGINEERING STAMP

UNLESS OTHERWISE SPECIFIED DIMENSIONS ARE IN INCHES. TOLERANCES ARE:

FRACTIONS − ± 1/16

DECIMALS − .XX ± .01
.XXX ± .005

ANGLES − ± 1/2

THE Miller-Clapperton PARTNERSHIP, INC
7948 Second Flag Drive | Austell, Georgia 30168
(770) 941-8281 | (770) 941-8276 Fax
www.millerclapperton.com

Title: Hurricane Wall Panels

DWG #:	SHEET #:	DWG DATE:	REVISION DATE:
MCP 100	1 Of 16	03/20/08	
MCP 100	1 Of 13	03/20/08	04/16/09
MCP 100	1 Of 9	03/20/08	04/30/09

Brad Beczkalo, FL. PE PE#: 39702
926 Front St., S.W. Mableton, GA 30059

FILE LOCATION: X:\R&D\NOA\DRAWINGS\LARGE MISSLE FLORIDA BUILDING CODE COMPSITE WALL SYSTEM\1 TITLE SHEET.DWG

PLOT STAMP: DATE: 05−06−2009 Time: 1:39:10 PM USER: kra

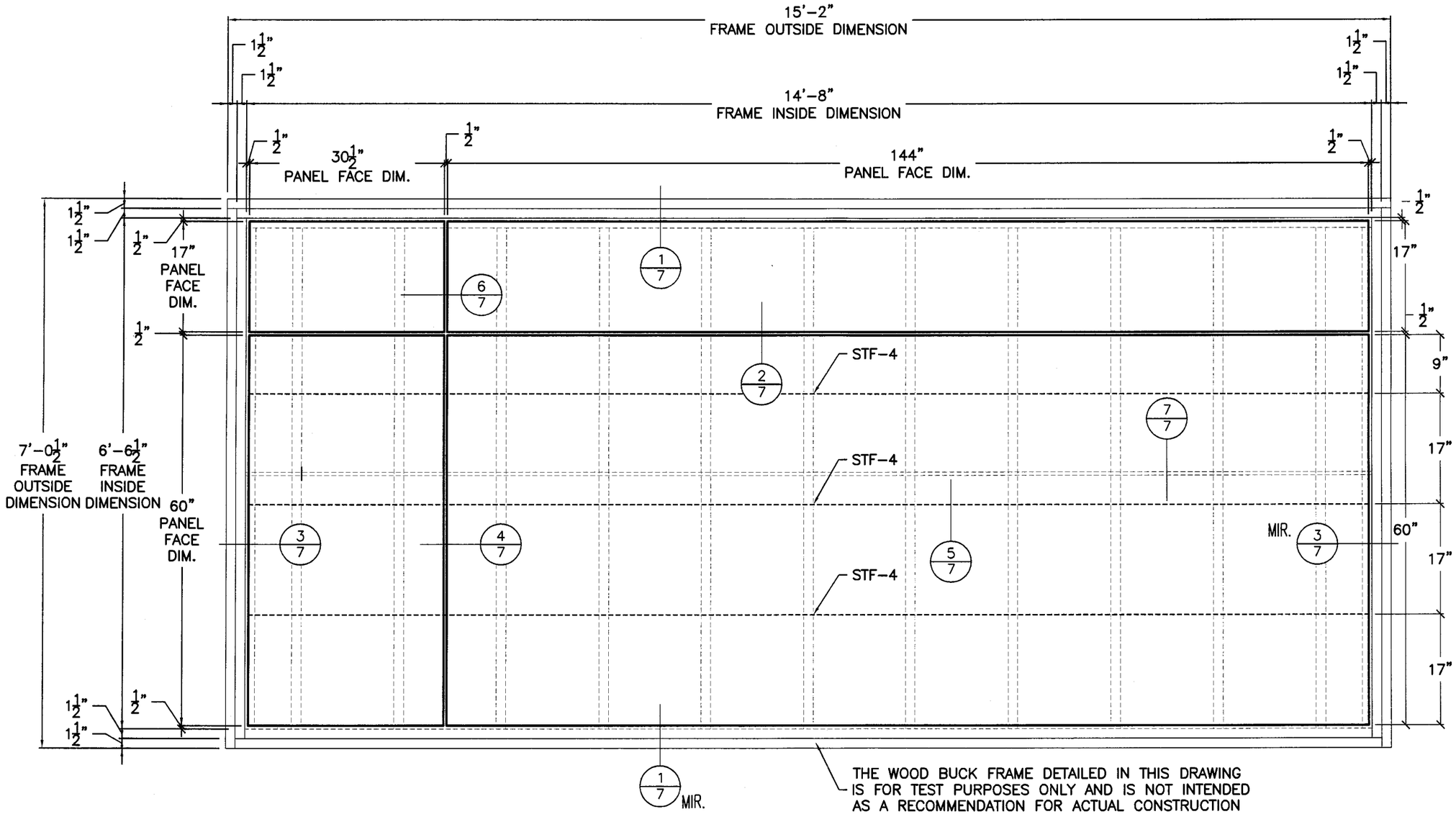

Approved as complying with the Florida Building Code
Date 07/01/2009
NOA# 09.0323.17
Miami Dade Product Control Division
By

1/2 LARGE MISSILE PANEL ELEVATION ON PLYWOOD
SCALE: 3/4" = 1'-0"

Brad Beczkalo

P.E.# 39702 05/06/09

TEST MATERIAL

(1) ALPOLIC 4mm PE

(2) ALUCOBOND 4mm PE

(3) REYNOBOND 4mm PE

ENGINEERING STAMP

UNLESS OTHERWISE SPECIFIED DIMENSIONS ARE IN INCHES. TOLERANCES ARE:

FRACTIONS – ± 1/16

DECIMALS – .XX ± .01
.XXX ± .005

ANGLES – ± 1/2

THE Miller-Clapperton PARTNERSHIP, INC
7948 Second Flag Drive | Austell, Georgia 30168
(770) 941-8281 | (770) 941-8276 Fax
www.millerclapperton.com

Title: Hurricane Wall Panels

DWG #:	SHEET #:	DWG DATE:	REVISION DATE:
MCP 100	5 OF 18	03/20/08	
MCP 100	2 OF 13	03/20/08	04/18/09
MCP 100	2 OF 9	03/20/08	04/30/09

Brad Beczkalo, FL. PE PE#: 39702

926 Front St., S.W. Mableton, Ga 30059

FILE LOCATION: X:\R&D\NOA\DRAWINGS\LARGE MISSLE FLORIDA BUILDING CODE COMPSITE WALL SYSTEM\2 PANEL ELEVATION.DWG

PLOT STAMP: DATE: 05-06-2009 Time: 1:39:50 PM USER: kra

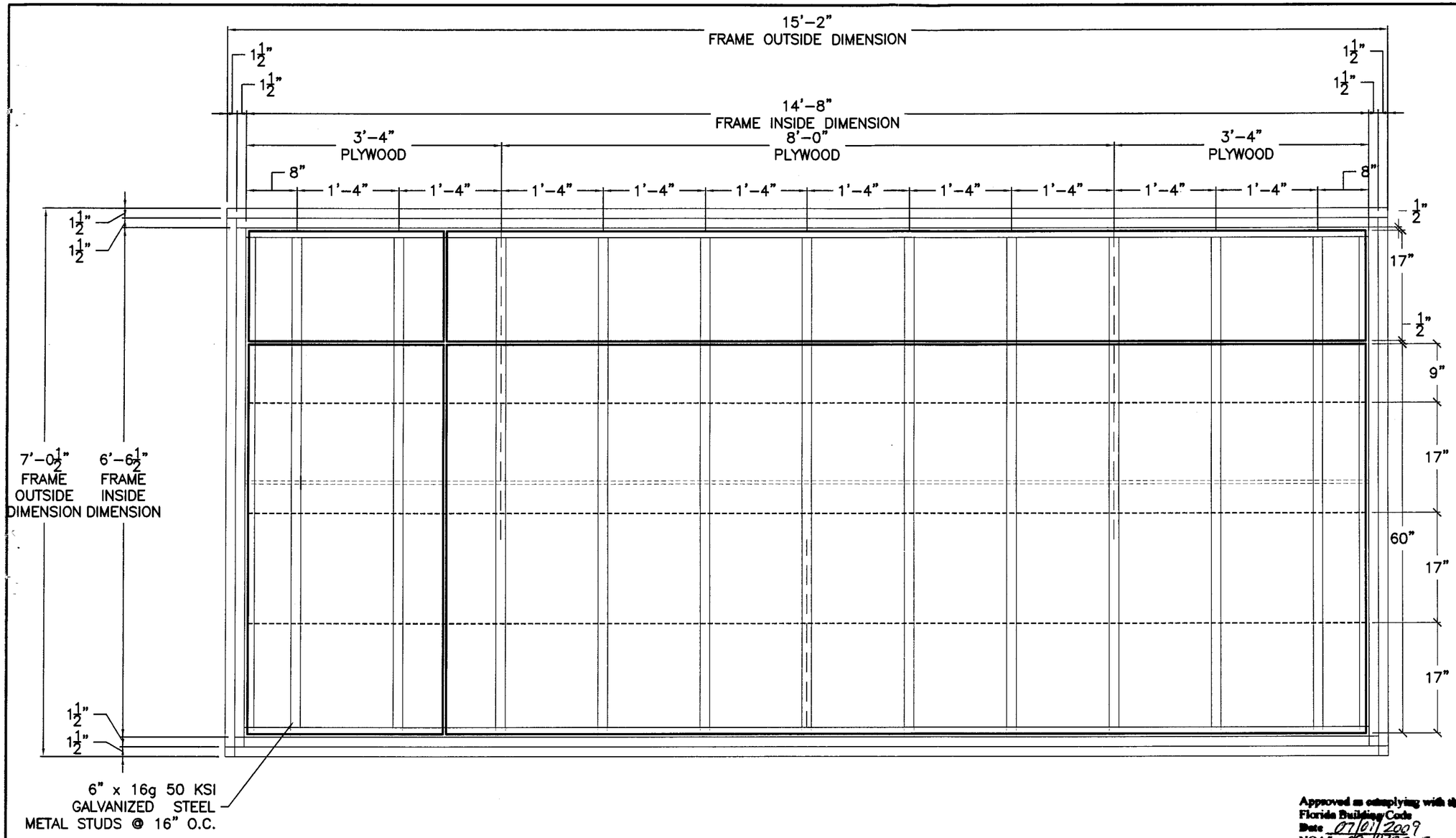

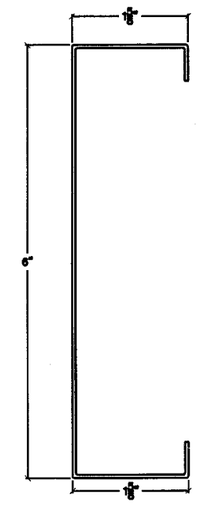

METAL STUD

1 / 3 LARGE MISSILE STUD FRAMING ELEVATION WITH PLYWOOD

SCALE: 3/4" = 1'-0"

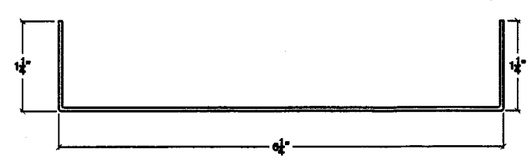

STEEL TRACK

Approved as complying with the Florida Building Code
Date 07/01/2009
NOA# 09-0323.17
Miami Dade Product Control Division
By

P.E. #39702 05/06/09

ENGINEERING STAMP

UNLESS OTHERWISE SPECIFIED DIMENSIONS ARE IN INCHES. TOLERANCES ARE:

FRACTIONS – ± 1/16

DECIMALS – .XX ± .01
.XXX ± .005

ANGLES – ± 1/2

THE Miller-Clapperton PARTNERSHIP, INC
7948 Second Flag Drive | Austell, Georgia 30168
(770) 941-8281 | (770) 941-8276 Fax
www.millerclapperton.com

Title: Hurricane Wall Panels

DWG #:	SHEET #:	DWG DATE:	REVISION DATE:
MCP 100	6 OF 18	03/20/08	
MCP 100	3 OF 13	03/20/08	04/16/09
MCP 100	3 OF 9	03/20/08	04/30/09

Brad Beczkalo, GA PE PE#: 39702

926 Front St., S.W. Mableton, Ga 30059

FILE LOCATION: X:\R&D\NOA\DRAWINGS\LARGE MISSLE FLORIDA BUILDING CODE COMPSITE WALL SYSTEM\3 STUD FRAMING ELEVATION.DWG

PLOT STAMP: DATE: 05-06-2009 Time: 1:40:56 PM USER: kra

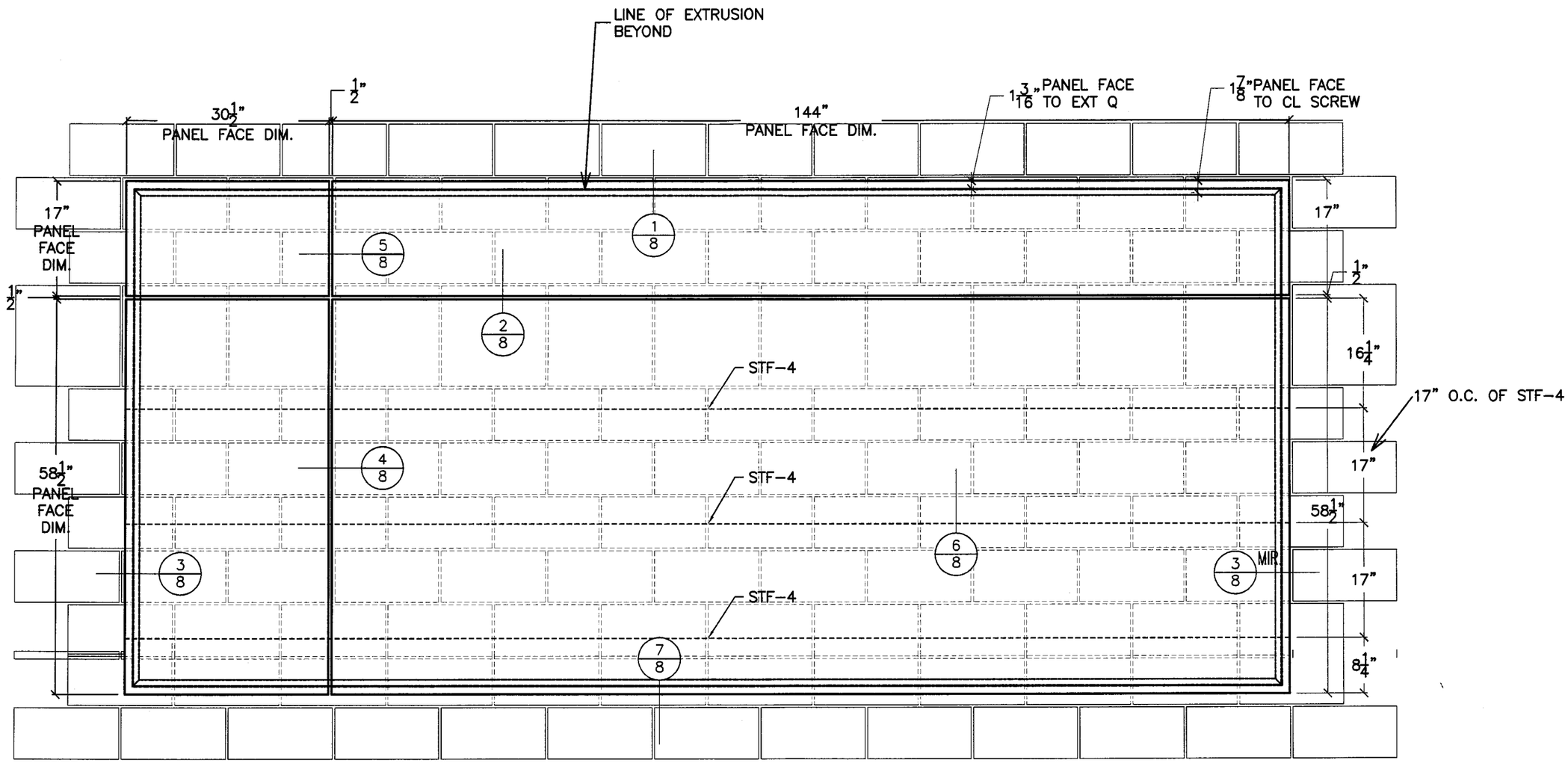

1/4 LARGE MISSILE CMU ELEVATION
SCALE: 3/4" = 1'-0"

Brad Beczkalo

P.E. #39702 05/06/09

Approved as complying with the Florida Building Code
Date 07/01/2009
NOA# 09-0323.17
Miami Dade Product Control Division
By

TEST MATERIAL

(1) ALPOLIC 4mm PE

(2) ALUCOBOND 4mm PE

(3) REYNOBOND 4mm PE

ENGINEERING STAMP

UNLESS OTHERWISE SPECIFIED DIMENSIONS ARE IN INCHES. TOLERANCES ARE:

FRACTIONS – ± 1/16

DECIMALS – .XX ± .01
.XXX ± .005

ANGLES – ± 1/2

THE Miller-Clapperton PARTNERSHIP, INC
7948 Second Flag Drive | Austell, Georgia 30168
(770) 941-8281 | (770) 941-8276 Fax
www.millerclapperton.com

Title: Hurricane Wall Panels

DWG #:	SHEET #:	DWG DATE:	REVISION DATE:
MCP 100	7 Of 18	03/20/08	
MCP 100	4 Of 13	03/20/08	04/16/09
MCP 100	4 Of 9	03/20/08	04/30/09

Brad Beczkalo, FL. PE PE#: 39702

926 Front St., S.W. Mableton, Ga 30059

FILE LOCATION: X:\R&D\NOA\DRAWINGS\LARGE MISSLE FLORIDA BUILDING CODE COMPSITE WALL SYSTEM\4 PANEL ELEVATION.DWG

PLOT STAMP: DATE: 05-06-2009 Time: 1:41:34 PM USER: kra

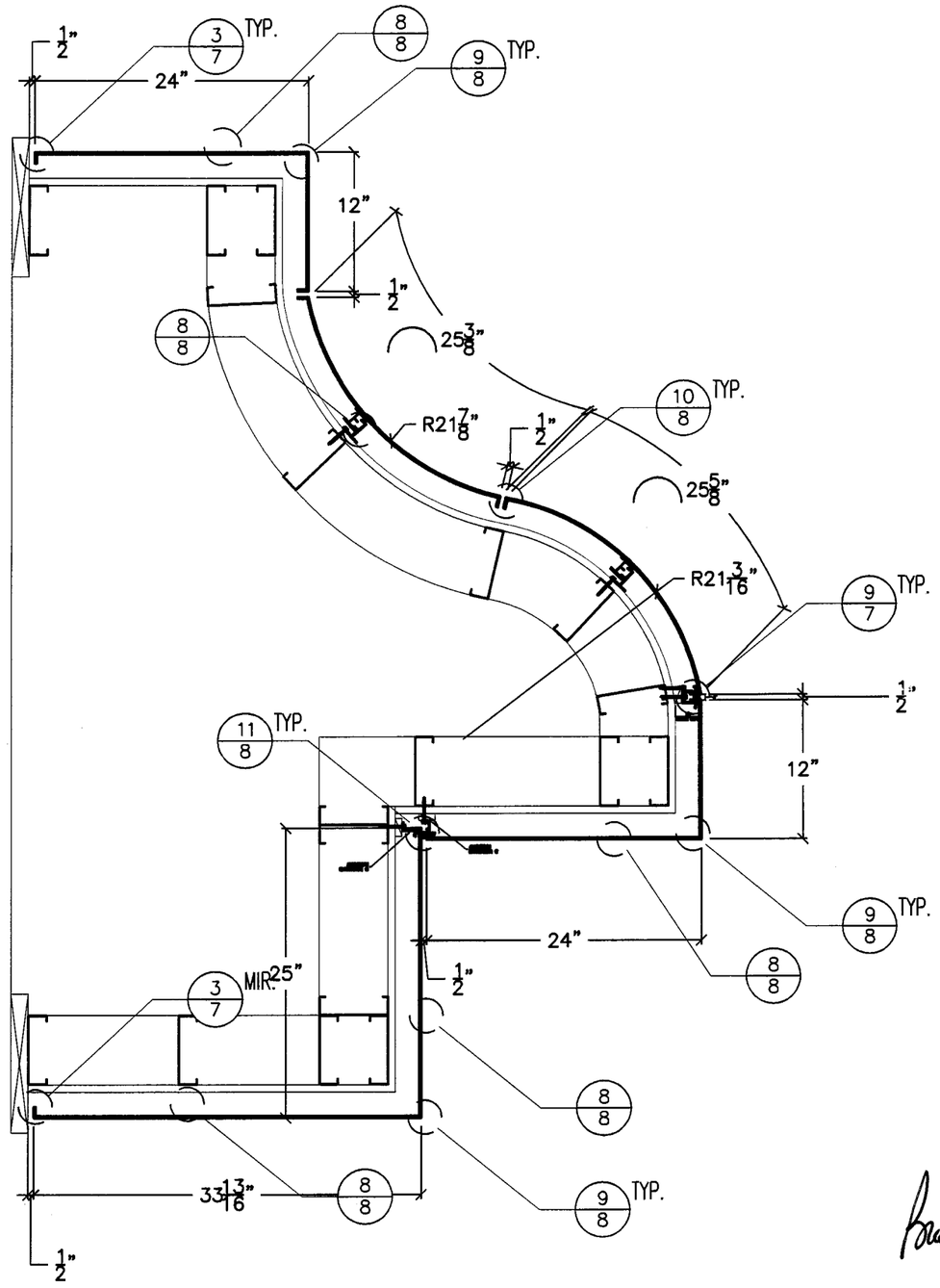

1/5 PLAN VIEW
SCALE: 1" = 1'-0"
ARCH. REF. : NA
MCP. REF. : NA

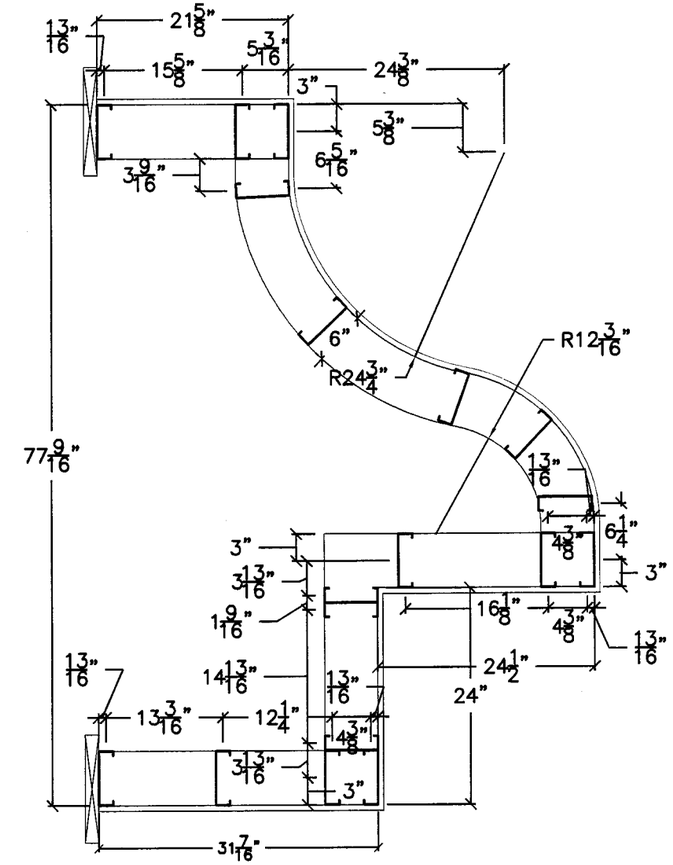

2/5 FRAMING PLAN
SCALE: 3/4" = 1'-0"
ARCH. REF. : NA
MCP. REF. : NA

Approved as complying with the Florida Building Code
Date 07/01/2009
NOA# 07-0323.17
Miami Dade Product Control Division
By

Brad Beczkalo

P.E. # 39702 05/06/09

ENGINEERING STAMP

UNLESS OTHERWISE SPECIFIED DIMENSIONS ARE IN INCHES. TOLERANCES ARE:

FRACTIONS – ± 1/16

DECIMALS – .XX ± .01
.XXX ± .005

ANGLES – ± 1/2

THE Miller-Clapperton PARTNERSHIP, INC
7948 Second Flag Drive | Austell, Georgia 30168
(770) 941-8281 | (770) 941-8276 Fax
www.millerclapperton.com

Title: Hurricane Wall Panels

DWG #:	SHEET #:	DWG DATE:	REVISION DATE:
MCP 100	10 Of 18	03/20/08	
MCP 100	7 Of 13	03/20/08	04/16/09
MCP 100	5 Of 9	03/20/08	04/30/09

Brad Beczkalo, FL. PE PE#: 39702

926 Front St., S.W. Mableton, Ga 30059

FILE LOCATION: X:\R&D\NOA\DRAWINGS\LARGE MISSLE FLORIDA BUILDING CODE COMPSITE WALL SYSTEM\5 PLAN VIEW.DWG

PLOT STAMP: DATE: 05-06-2009 Time: 1:42:28 PM USER: kra

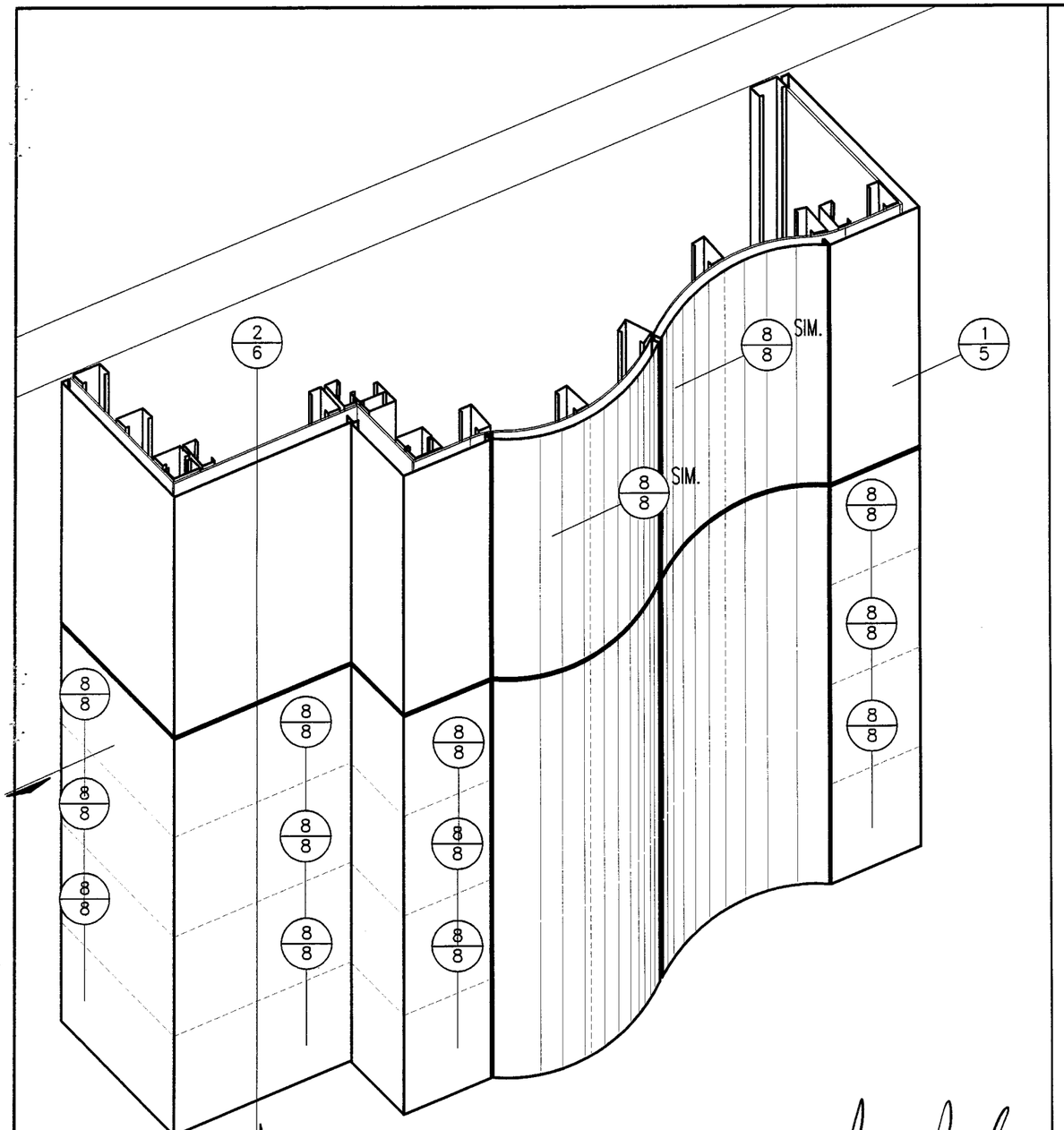

1/6 ISOMETRIC VIEW
SCALE: 3/4" = 1'-0"
ARCH. REF. : NA
MCP. REF. : NA

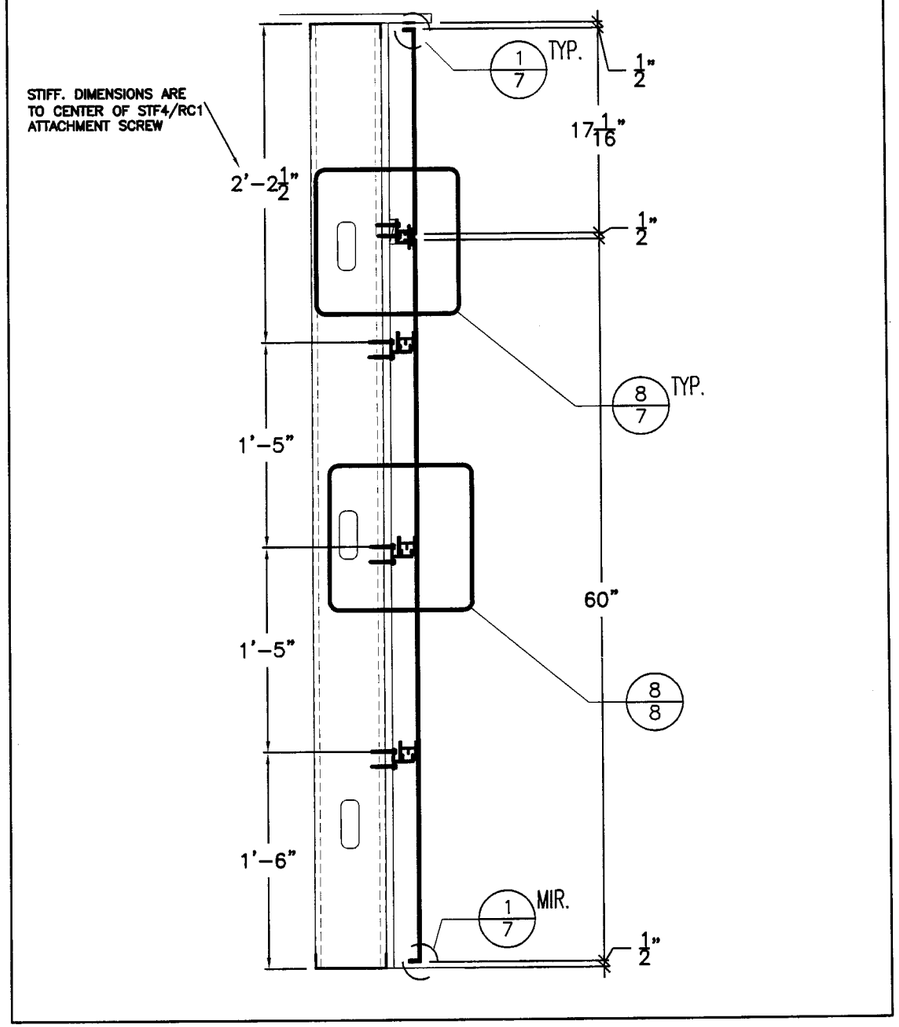

2/6 WALL SECTION
SCALE: 1" = 1'-0"
ARCH. REF. : NA
MCP. REF. : NA

Approved as complying with the Florida Building Code
Date 07/01/2009
NOA# 07-0323.17
Miami Dade Product Control Division
By

TEST Material

(1) ALPOLIC 4mm PE

(2) ALUCOBOND 4mm PE

(3) REYNOBOND 4mm PE

ENGINEERING STAMP

UNLESS OTHERWISE SPECIFIED DIMENSIONS ARE IN INCHES. TOLERANCES ARE:

FRACTIONS – ± 1/16

DECIMALS – .XX ± .01
.XXX ± .005

ANGLES – ± 1/2

THE Miller-Clapperton PARTNERSHIP, INC
7948 Second Flag Drive | Austell, Georgia 30168
(770) 941-8281 | (770) 941-8276 Fax
www.millerclapperton.com

Title: Hurricane Wall Panels

DWG #:	SHEET #:	DWG DATE:	REVISION DATE:
MCP 100	12 Of 18	03/20/08	
MCP 100	9 Of 13	03/20/08	04/16/09
MCP 100	6 Of 9	03/20/08	04/30/09

Brad Beczkalo, FL. PE PE#: 39702

926 Front St., S.W. Mableton, Ga 30059

P.E. #39702 05/06/09

FILE LOCATION: X:\R&D\NOA\DRAWINGS\LARGE MISSLE FLORIDA BUILDING CODE COMPSITE WALL SYSTEM\6 SECTION AND ISO.DWG

PLOT STAMP: DATE: 05-06-2009 Time: 1:43:21 PM USER: kra

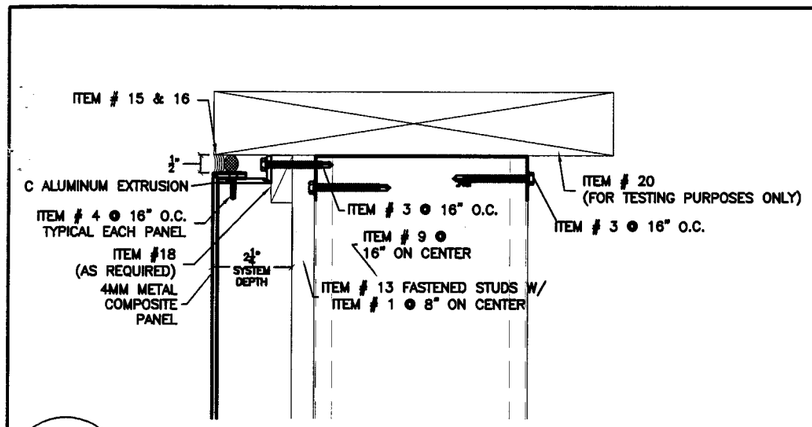

1/7 CONNECTION DETAIL 1
SCALE: 3" = 1'-0"

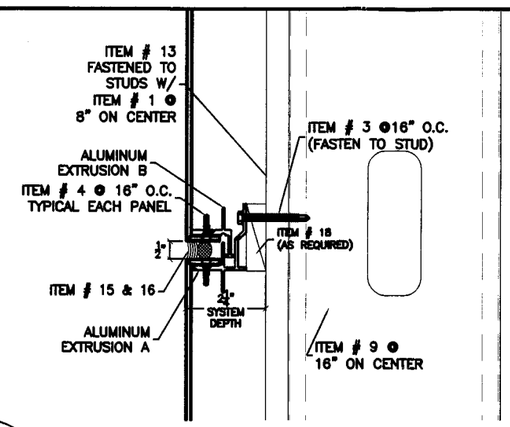

2/7 CONNECTION DETAIL 2
SCALE: 3" = 1'-0"

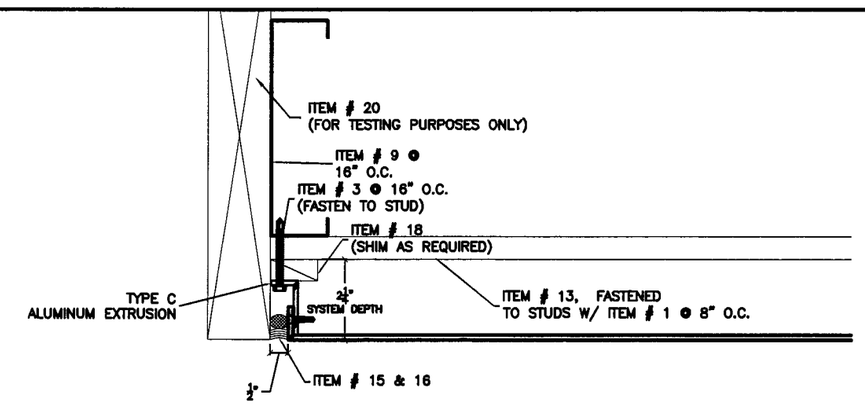

3/7 CONNECTION DETAIL 3
SCALE: 3" = 1'-0"

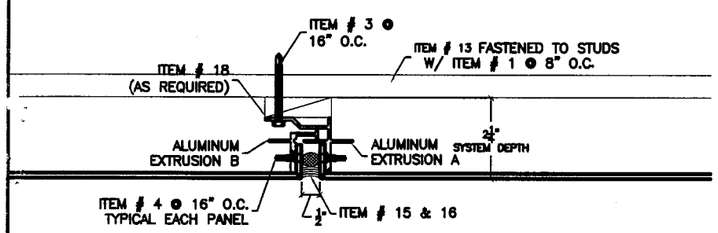

4/7 CONNECTION DETAIL 4
SCALE: 3" = 1'-0"

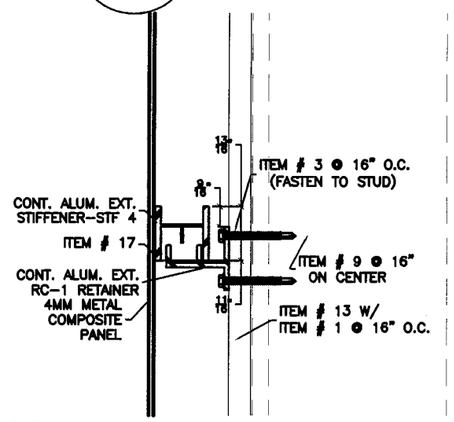

5/7 CONNECTION DETAIL 14
SCALE: 3" = 1'-0"

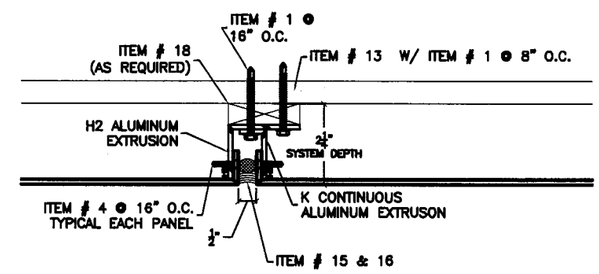

6/7 H2-KC CONNECTION - PLYWOOD
SCALE: 3" = 1'-0"

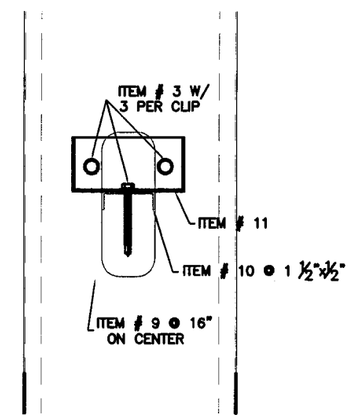

7/7 LOCK IN & BRACING DETAIL
SCALE: 3" = 1'-0"

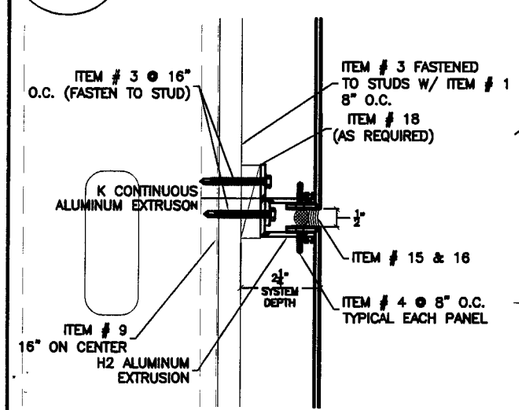

8/7 H2-KC CONNECTION
SCALE: 3" = 1'-0"

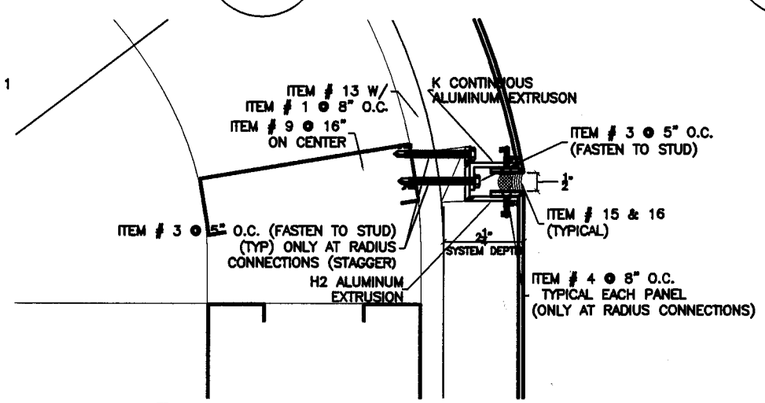

9/7 CONNECTION DETAIL 17
SCALE: 3" = 1'-0"

Approved as complying with the Florida Building Code
Date 07/01/2009
NOA# 09-0323.17
Miami Dade Product Control Division
By

Brad Beczkalo

P.E. #39702 05/06/09

ENGINEERING STAMP

UNLESS OTHERWISE SPECIFIED DIMENSIONS ARE IN INCHES. TOLERANCES ARE:

FRACTIONS – ± 1/16

DECIMALS – .XX ± .01
.XXX ± .005

ANGLES – ± 1/2

THE Miller-Clapperton PARTNERSHIP, INC
7948 Second Flag Drive | Austell, Georgia 30168
(770) 941-8281 | (770) 941-8276 Fax
www.millerclapperton.com

Title: Hurricane Wall Panels

DWG #:	SHEET #:	DWG DATE:	REVISION DATE:
MCP 100	13 Of 18	03/20/08	
MCP 100	7 Of 13	03/20/08	04/16/09
MCP 100	7 Of 9	03/20/08	04/30/09

Brad Beczkalo, FL. PE PE#: 39702

926 Front St., S.W. Mableton, Ga 30059

FILE LOCATION: X:\R&D\NOA\DRAWINGS\LARGE MISSLE FLORIDA BUILDING CODE COMPSITE WALL SYSTEM\7 CONNECTION DETAILS 1.DWG

PLOT STAMP: DATE: 05-06-2009 Time: 1:45:50 PM USER: kra

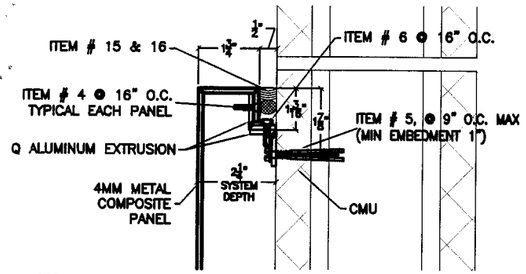

1/8 CONNECTION DETAIL 5
SCALE: 3" = 1'-0"

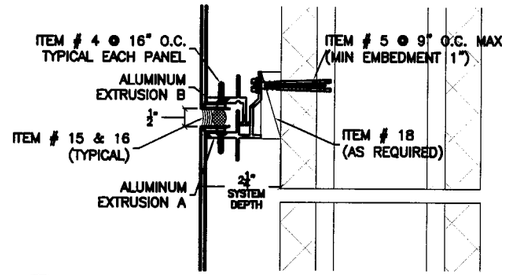

2/8 CONNECTION DETAIL 6
SCALE: 3" = 1'-0"

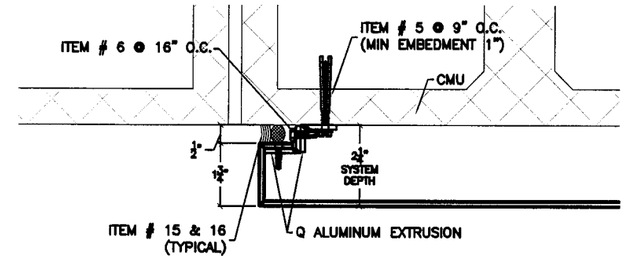

3/8 CONNECTION DETAIL 7
SCALE: 3" = 1'-0"

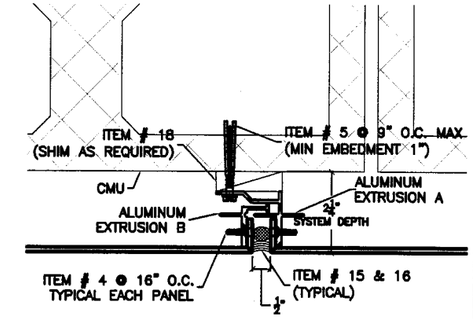

4/8 CONNECTION DETAIL 8
SCALE: 3" = 1'-0"

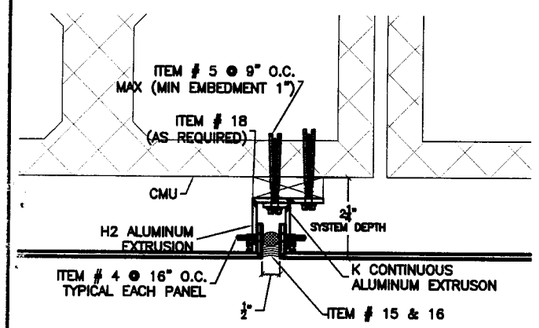

5/8 H2-KC CONNECTION - CMU
SCALE: 3" = 1'-0"

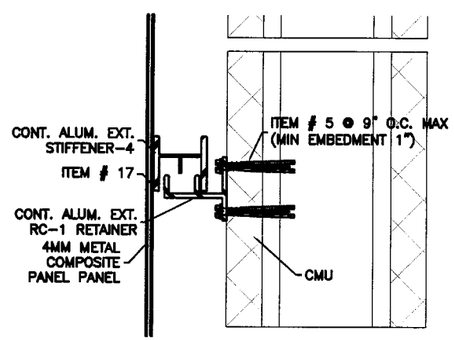

6/8 CONNECTION DETAIL 15
SCALE: 3" = 1'-0"

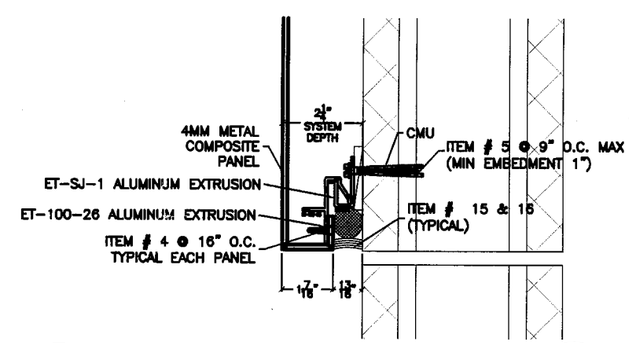

7/8 CONNECTION DETAIL 20
SCALE: 3" = 1'-0"

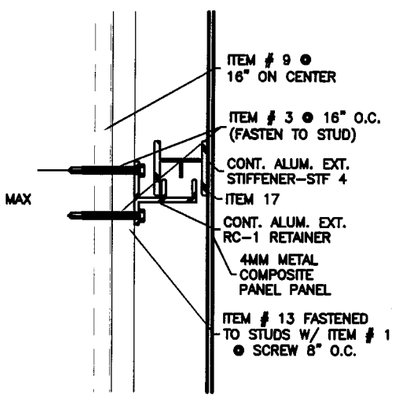

8/8 CONNECTION DETAIL 16
SCALE: 3" = 1'-0"

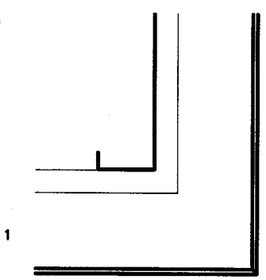

9/8 CONNECTION DETAIL 19
SCALE: 3" = 1'-0"

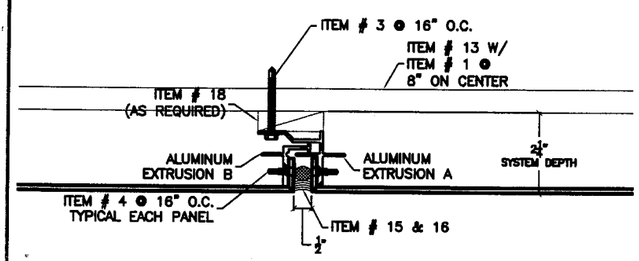

10/8 CONNECTION DETAIL 12
SCALE: 3" = 1'-0"

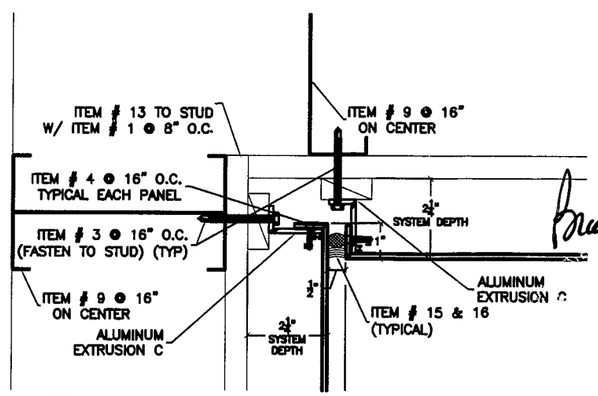

11/8 CONNECTION DETAIL 18
SCALE: 3" = 1'-0"

Brad Beczkalo

P.E. # 39702 05/06/09

Approved as complying with the Florida Building Code
Date 07/01/2009
NOA# 07-0323.17
Miami Dade Product Control Division
By

ENGINEERING STAMP

UNLESS OTHERWISE SPECIFIED DIMENSIONS ARE IN INCHES. TOLERANCES ARE:

FRACTIONS - ± 1/16

DECIMALS - .XX ± .01
.XXX ± .005

ANGLES - ± 1/2

THE Miller-Clapperton PARTNERSHIP, INC
7948 Second Flag Drive | Austell, Georgia 30168
(770) 941-8281 | (770) 941-8276 Fax
www.millerclapperton.com

Title: Hurricane Wall Panels

DWG #:	SHEET #:	DWG DATE:	REVISION DATE:
MCP 100	15 Of 18	03/20/08	
MCP 100	8 Of 13	03/20/08	04/16/09
MCP 100	8 Of 9	03/20/08	04/30/09

Brad Beczkalo, FL. PE PE#: 39702

926 Front St., S.W. Mableton, Ga 30059

FILE LOCATION: X:\R&D\NOA\DRAWINGS\LARGE MISSLE FLORIDA BUILDING CODE COMPSITE WALL SYSTEM\8 CONNECTION DETAILS 3.DWG

PLOT STAMP: DATE: 05-06-2009 Time: 1:48:47 PM USER: kra

MATES WITH DIE NO. 2421

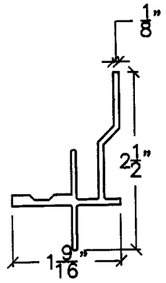

MATES WITH DIE 2420-A

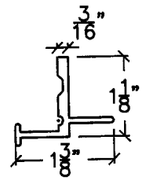

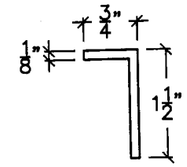

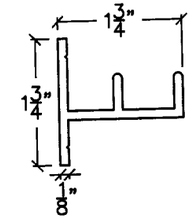

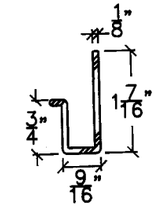

1/9 A EXTRUSION DIE NO 2420 A
SCALE: 6" = 1'-0"

2/9 B EXTRUSION DIE NO 3182
SCALE: 6" = 1'-0"

3/9 C EXTRUSION
SCALE: 6" = 1'-0"

4/9 RETAINER CLIP-RC-1 DIE 4074
SCALE: 6" = 1'-0"

5/9 SJ-1 RC-2639
SCALE: 6" = 1'-0"

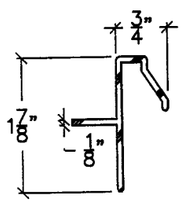

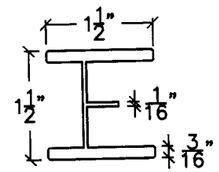

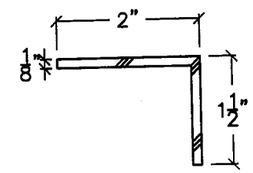

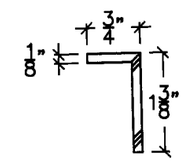

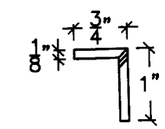

6/9 100-26 DIE 4716
SCALE: 6" = 1'-0"

7/9 STF-4
SCALE: 6" = 1'-0"

8/9 ET-H2
SCALE: 6" = 1'-0"

9/9 ET-KC
SCALE: 6" = 1'-0"

10/9 ET-Q
SCALE: 6" = 1'-0"

Item #	Panel Hardware	Location
1	Buildex TEKS 3 #12-14 2":	Plywood to Stud
2	Buildex Tru-Grip #12-14 X 3/4":	Stud to Wood Frame
3	Buildex TEKS 3 #12-14 2":	Extrusion to Stud / Stud to Frame
4	#10-16 X 1" Tek-3 18-8 stainless steel Counter sunk,	Panel to Extrusion
5	Buildex 1/4" Tapcon X 1 3/4"	Extrusion to CMU
6	Buildex TEKS 3 #12-14 1":	Extrusion to Extrusion
7	#8 - 18 X 3/4" Tek-3 Stainless steel counter sunk	STF4 to Extrusion
8	#6 X 1 1/4" Phillips Head, Fine Thread, Self Drilling	Dens Glass to Stud
Item #	**Framing & Accessories**	**Size**
9	6" 16 Gauge 50 KSI studs	8'
10	Stud Bracing	8'
11	Stud Bracing Lock-Ins	EA
12	Stud Top & Bottom Track	8'
13	5/8" plywood	4X8
14	5/8" Densglass Gold	4X8
15	7/8" open cell backer rod	Lin Ft
16	Dow Corning 795 Caulk	Lin Ft
17	Dow Corning (internal panel) 1199	Lin Ft
18	1/4" shims	EA
19	Curved Top &Bottom Trak 16 gauge 50 KSI	8'
20	2X12 Studs Pine Studs	16'

Approved as complying with the Florida Building Code
Date 07/01/2009
NOA# 09-0323.17
Miami Dade Product Control Division
By

Brad Beczkalo

PE # 39702 05/06/09

ALUMINUM EXTRUSIONS

1. MATERIAL: ATTACHMENT ANGLES ARE EXTRUDED ALUMINUM ALLOY 6063 WITH A T6 TEMPER

2. FINISH: MILL FINISH

ENGINEERING STAMP

UNLESS OTHERWISE SPECIFIED DIMENSIONS ARE IN INCHES. TOLERANCES ARE:

FRACTIONS – ± 1/16

DECIMALS – .XX ± .01
.XXX ± .005

ANGLES – ± 1/2

THE Miller-Clapperton PARTNERSHIP, INC
7948 Second Flag Drive | Austell, Georgia 30168
(770) 941-8281 | (770) 941-8276 Fax
www.millerclapperton.com

Title: Hurricane Wall Panels

DWG #:	SHEET #:	DWG DATE:	REVISION DATE:
MCP 100	3 Of 18	03/20/08	
MCP 100	13 Of 13	03/20/08	04/18/09
MCP 100	9 Of 9	03/20/08	04/30/09

Brad Beczkalo, FL. PE PE#: 39702

926 Frant St., S.W. Mableton, Ga 30059

PLOT STAMP: DATE: 05-06-2009 Time: 1:51:33 PM USER: kra

FILE LOCATION: X:\R&D\NOA\DRAWINGS\LARGE MISSLE FLORIDA BUILDING CODE COMPSITE WALL SYSTEM\9 EXTRUSIONS.DWG