MIAMI-DADE COUNTY
BUILDING CODE COMPLIANCE OFFICE (BCCO)
PRODUCT CONTROL DIVISION

MIAMI-DADE COUNTY, FLORIDA
METRO-DADE FLAGLER BUILDING
140 WEST FLAGLER STREET, SUITE 1603
MIAMI, FLORIDA 33130-1563
(305) 375-2901 FAX (305) 375-2908
www.miamidade.gov/buildingcode

NOTICE OF ACCEPTANCE (NOA)

Stanley Access Technologies
65 Scott Swamp Road
Farmington, CT 06032

SCOPE:

This NOA is being issued under the applicable rules and regulations governing the use of construction materials. The documentation submitted has been reviewed by Miami-Dade County Product Control Division and accepted by the Board of Rules and Appeals (BORA) to be used in Miami Dade County and other areas where allowed by the Authority Having Jurisdiction (AHJ).

This NOA shall not be valid after the expiration date stated below. The Miami-Dade County Product Control Division (In Miami Dade County) and/or the AHJ (in areas other than Miami Dade County) reserve the right to have this product or material tested for quality assurance purposes. If this product or material fails to perform in the accepted manner, the manufacturer will incur the expense of such testing and the AHJ may immediately revoke, modify, or suspend the use of such product or material within their jurisdiction. BORA reserves the right to revoke this acceptance, if it is determined by Miami-Dade County Product Control Division that this product or material fails to meet the requirements of the applicable building code.

This product is approved as described herein, and has been designed to comply with the Florida Building Code, including the High Velocity Hurricane Zone.

DESCRIPTION: Dura-Storm Series "2000/3000" Alum Automatic Sliding Glass Door (w/ Breakout)-LMI

APPROVAL DOCUMENT: Drawing No. **05-SAT-0024**, titled "Dura-Storm series 2000 & 3000 Automatic Sliding Glass Door", sheets 1 through 10 of 10 prepared by Engineering Express, dated 04-18-2002 and last revised on 03/12/2009, signed and sealed by Frank L. Bernando, P.E., bearing the Miami-Dade County Product Control Revision stamp with the Notice of Acceptance number and expiration date by the Miami-Dade County Product Control Division.

MISSILE IMPACT RATING: Large and small Missile Impact

Limitation: 1. Electrical devices are not part of this approval and must be reviewed by corresponding authority.
2. Adam Rites series 1853A must be used in conjunction with Adam Rites 4015 bolts.
3. Interior Glazing: See glass orientation per sheet 3 and 8.

LABELING: Each unit shall bear a permanent label with the manufacturer's name or logo, city, state and following statement: "Miami-Dade County Product Control Approved", unless otherwise noted herein.

RENEWAL of this NOA shall be considered after a renewal application has been filed and there has been no change in the applicable building code negatively affecting the performance of this product.

TERMINATION of this NOA will occur after the expiration date or if there has been a revision or change in the materials, use, and/or manufacture of the product or process. Misuse of this NOA as an endorsement of any product, for sales, advertising or any other purposes shall automatically terminate this NOA. Failure to comply with any section of this NOA shall be cause for termination and removal of NOA.

ADVERTISEMENT: The NOA number preceded by the words Miami-Dade County, Florida, and followed by the expiration date may be displayed in advertising literature. If any portion of the NOA is displayed, then it shall be done in its entirety.

INSPECTION: A copy of this entire NOA shall be provided to the user by the manufacturer or its distributors and shall be available for inspection at the job site at the request of the Building Official.

This NOA **revises NOA # 08-0110.04** and consists of this page 1 and evidence page E-1, as well as approval document mentioned above.

The submitted documentation was reviewed by **Ishaq I. Chanda, P.E.**

MIAMI-DADE COUNTY APPROVED

8/ 7/8/9

Stanley Access Technologies

NOTICE OF ACCEPTANCE: EVIDENCE SUBMITTED

A. DRAWINGS *(Transferred from NOA#* **08-0110.04***)*

1. Manufacturers die drawings and sections.
2. Drawing No. **05-SAT-0024**, titled "Dura-Storm series 2000 & 3000 Automatic Sliding Glass Door", sheets 1 through 10 of 10 prepared by Engineering Express, dated 04-18-2002 and last revised on 03/12/2009, signed and sealed by Frank L. Bernando, P.E.

Note: This revision consists of extrusion part numbers & addition of cluster anchors.

B. TESTS *(Transferred from NOA#* **08-0110.04***)* Original test conducted per SFBC, PA 201, 202 and 203-94 now termed as TAS 201, 202 and 203-94

1. Test reports on 1) Air Infiltration Test, per FBC, TAS 202-94
   2) Uniform Static Air Pressure Test, per FBC, TAS 202-94
   3) Water Resistance Test, per FBC, TAS 202-94 (Not Performed)
   4) Large Missile Impact Test per FBC, TAS 201-94
   5) Cyclic Wind Pressure Loading per FBC, TAS 203-94
   6) Forced Entry Test, per FBC 2411 3.2.1 and TAS 202-94

Along with installation diagram of an automatic aluminum sliding glass door w/ fixed panels, prepared by Fenestration Testing Laboratory Test Report No. **FTL**00157 **(3070)** and **FTL**00157 **(3071)** both dated May 09, 2001and signed & sealed by Luis A. Figuerado, P.E.
Note: Revised Marked-up Drawings issued by Fenestration Testing Lab.

C. CALCULATIONS

1. Anchor Verification Calculations, complying w/ FBC-2007, dated 03-05-2009, prepared, signed and sealed by Frank L. Bennardo, P. E.
2. Glazing complies with ASTME-1300-02 &-04

D. QUALITY ASSURANCE

1. Miami Dade Building Code Compliance Office (BCCO).

E. MATERIAL CERTIFICATIONS

1. Notice of Acceptance No. 07-1116.11 issued to SAF-GLAS, L.L.C. for "SAF GLAS, Polycarbonate laminate", expiring on 12/16/12.

F. STATEMENTS

1. Statement letter compliance to FBC-2007 and "No financial interest", both dated March 04, 2009, signed by Frank L. Bennardo, P. E.
2. Statement letter dated 12/07/07 justifying internal mechanism change, signed and sealed by Frank L. Bennardo, P.E. (transferred from file # 08-0110.04)
3. Statement of lab compliance, as part of the above referenced test report.

G. OTHER

1. *This NOA* ***revises NOA # 08-0110.04,*** *expiring April 18, 2012*
2. Test proposal dated Sept 07, 2007 approved by BCCO.
3. Manufacture supplied Adam Rites deadbolt/hook and bolts mechanism brochures.
4. Previous NOA(s) associated with this file are #06-1214.08 and 05-0817.17.

Ishaq I. Chanda

Ishaq I. Chanda, P.E.
Product Control Examiner
NOA No 09-0323.26
Expiration Date: April 18, 2012
Approval Date: July 29, 2009

DURA-STORM 2000

NON-REINFORCED BI-PART AUTOMATIC SLIDING GLASS DOOR LARGE MISSILE IMPACT RESISTANT

FRANK L. BENNARDO, P.E.
PE0046549
03/12/2009

ANCHOR TYPE

IN CONCRETE (3000 PSI MIN): Ø1/4" POWERS PERMASEAL TAPPER WITH 1 1/2" MIN EMBED AND 3" MIN EDGE DIST
IN A36 STEEL (3/16" MIN THICKNESS): 1/4-20 SMS SAE GRADE 5 OR BETTER
IN WOOD (G=0.55 MIN): #14 WOOD SCREW WITH 1 1/2" MIN EMBED AND 3/4" MIN EDGE DIST.
(NOTE: MINIMUM 2X4 WOODBUCK FOR WOOD SCREWS)

ANCHOR SPACING

SILL: DOUBLE ROWS, 4" FROM EACH CORNER WITH REMAINDER SPACED AT 13" O.C.
HEAD: SINGLE ROW, 4" FROM EACH CORNER WITH REMAINDER SPACED AT 10" O.C.
JAMBS: SINGLE ROW, 2" FROM BOTTOM CORNER WITH REMAINDER SPACED AT 10" O.C.

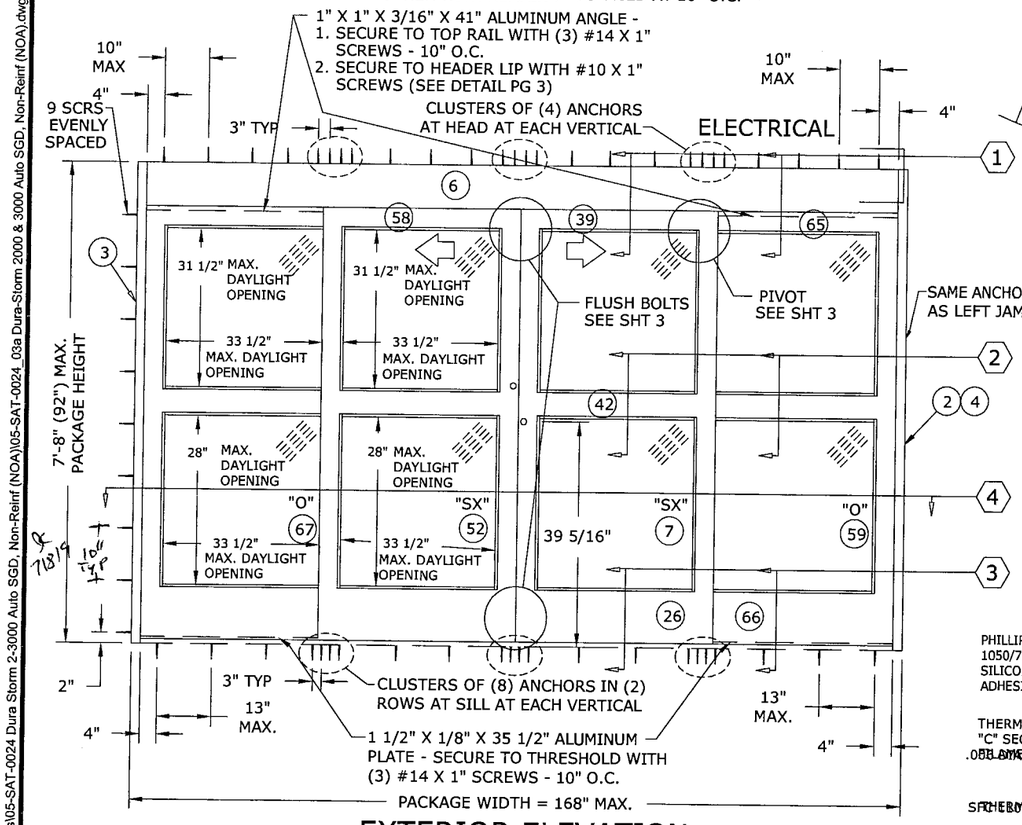

EXTERIOR ELEVATION

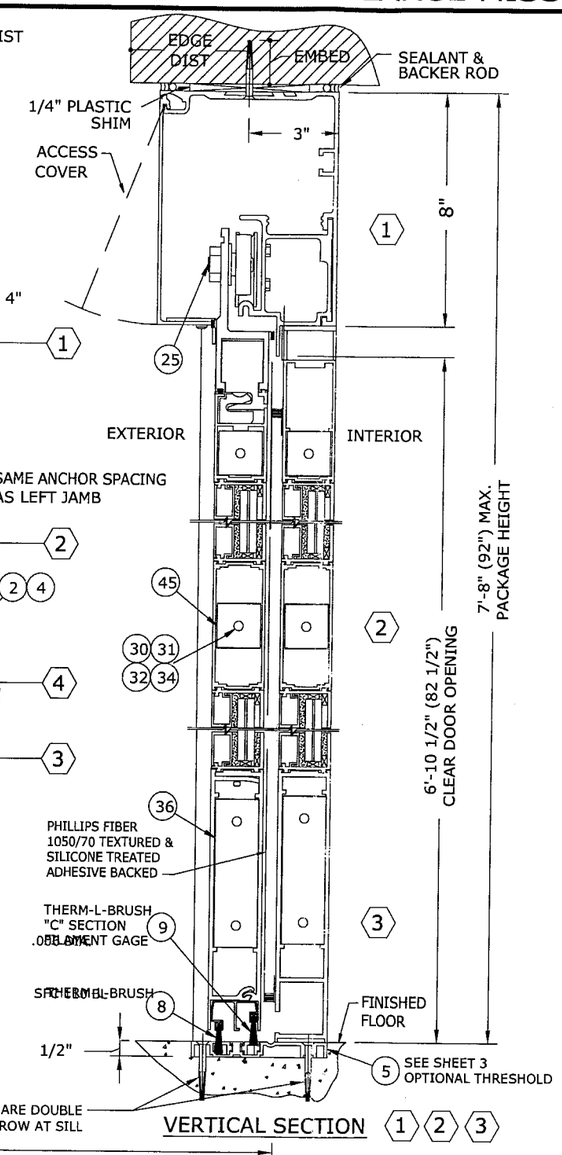

VERTICAL SECTION 1 2 3

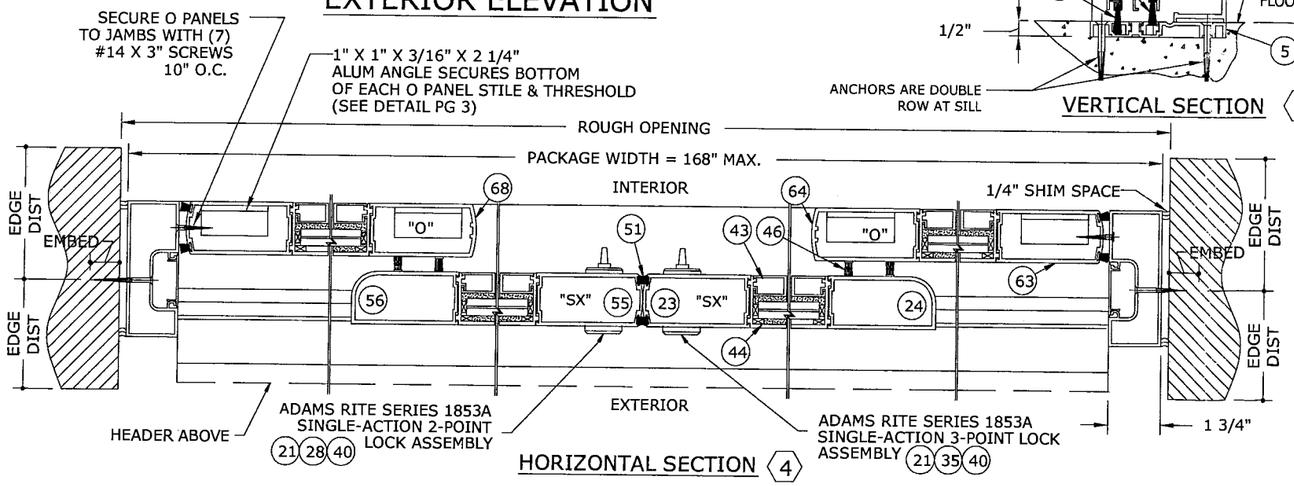

HORIZONTAL SECTION 4

PACKAGE HEIGHT INFORMATION FOR SURFACE APPLICATIONS			
PACKAGE HEIGHT	MASONRY OPENING	CAULKING ALLOWANCE	ACTUAL CLEAR OPG UNDER HEADER
7'-8" (92")	7'-8 1/4" (92 1/4")	1/4"	6'-10 1/2" (82 1/2")

PACKAGE WIDTH INFORMATION						
PKG WIDTH	SLIDING DOOR OPENING	(SX) DOOR WIDTH	(SO) DOOR WIDTH	DOOR TRAVEL	MASONRY OPENING	CAULKING ALLOWANCE
14'-0" (168")	66 1/4"	43 7/16"	43 7/16"	33 1/8"	14'-1/2" (168 1/2")	1/4" / SIDE

DESIGN PRESSURE RATING (LARGE MISSILE IMPACT)		
	WHERE WATER INFILTRATION REQUIREMENT IS NEEDED.	WHERE WATER INFILTRATION REQUIREMENT IS NOT NEEDED.
POSITIVE	NOT APPROVED	+ 56 PSF
NEGATIVE	NOT APPROVED	- 56 PSF

GENERAL NOTES:

1. THIS PRODUCT HAS BEEN TESTED & DESIGNED IN ACCORDANCE WITH THE REQUIREMENTS OF THE 2007 FLORIDA BUILDING CODE - HIGH VELOCITY HURRICANE ZONE (HVHZ) - AND MIAMI-DADE PROTOCOLS TAS 201, 202, & 203 AS A LARGE MISSILE IMPACT RESISTANT SYSTEM.
2. NO 33-1/3% INCREASE IN ALLOWABLE STRESS HAS BEEN USED IN THE DESIGN OF THIS SYSTEM. WIND LOAD DURATION FACTOR Cd=1.6 HAS BEEN USED FOR WOOD ANCHOR DESIGN.
3. POSITIVE & NEGATIVE DESIGN PRESSURES CALCULATED FOR USE WITH THIS SYSTEM SHALL BE DETERMINED BY OTHERS ON A JOB-SPECIFIC BASIS IN ACCORDANCE WITH THE GOVERNING CODE.
4. THE SYSTEM DETAILED HEREIN IS GENERIC AND DOES NOT PROVIDE INFORMATION FOR A SPECIFIC SITE. WHERE SITE CONDITIONS DIFFER FROM THE CONDITIONS DETAILED HEREIN, A LICENSED ENGINEER OR REGISTERED ARCHITECT SHALL PREPARE SITE SPECIFIC DOCUMENTS FOR USE IN CONJUNCTION WITH THIS DOCUMENT.
5. PERMIT HOLDER SHALL VERIFY THE ADEQUACY OF THE EXISTING STRUCTURE TO WITHSTAND ADDITIONAL IMPOSED LOADS. WOOD BUCKS NOT BY THIS PRODUCT MANUFACTURER SHALL BE ANCHORED PROPERLY TO TRANSFER LOADS TO THE HOST STRUCTURE.
6. THE PRODUCT DETAILED HEREIN HAS BEEN DESIGNED AND TESTED TO THE MAXIMUM SPANS & LOADS SHOWN ON THESE DRAWINGS. REF FTL TEST REPORTS #3070 & 3071.
7. ALL ALUMINUM PARTS ARE 6063-T6 ALUMINUM.
8. GLAZING: 9/16" LAMINATED IMPACT RATED "SAF-GLAS" BY SECURITY IMPACT GLASS (1/4" ANNEALED INNER & OUTER LAYERS WITH 0.100" INTERLAYER).
9. CORNER PANEL CONSTRUCTION: PANEL CORNERS ARE BUTT JOINTED, SECURED W/ (4) FULL-WIDTH 5/16" THREADED TIE RODS AT TOP RAIL, INTERMEDIATE HORIZONTAL MUNTIN BAR AND BOTTOM RAIL. ALL JOINTS ARE ALSO WELDED.
10. GLAZING MATERIAL IN BOTH FIXED & SLIDING PANELS OF ALL SLIDING DOORS SHALL COMPLY WITH THE REQUIREMENTS IN THE PERFORMANCE SPECIFICATIONS & METHODS OF TEST FOR SAFETY GLAZING MATERIALS USED IN BUILDINGS.
11. ANCHORS SHALL BE INSTALLED PER MANUFACTURER'S SPECIFICATIONS, SPACED AS NOTED HEREIN. ANCHOR EMBEDMENT TO BASE MATERIAL DOES NOT INCLUDE WALL DRESSING OR STUCCO.
12. ALL BOLTS & WASHERS SHALL BE ZINC COATED, GALVANIZED, OR STAINLESS STEEL WITH A MINIMUM TENSILE STRENGTH OF 60 KSI, EXCEPT INSTALLATION ANCHORS.
13. ALL STEEL IN CONTACT WITH ALUMINUM SHALL BE PAINTED OR COATED.

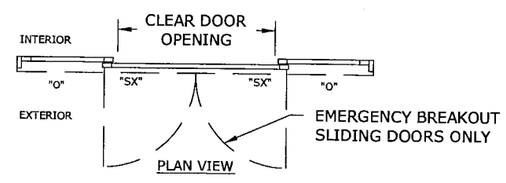

PLAN VIEW

PRODUCT REVISED
as complying with the Florida Building Code
Acceptance No. 09-0323.26
Expiration Date APRIL 18, 2012
By Ishaq I. Chanda
Miami Dade Product Control Division

ENGINEERING EXPRESS®
160 SW 12th AVENUE, #106
DEERFIELD BEACH, FL 33442
PH: (954) 354-0660 FAX: (954) 354-0443
WWW.ENGEXP.COM
CERT OF AUTH #9885
A FRANK L. BENNARDO, P.E., INC. INNOVATION

STANLEY®
ACCESS TECHNOLOGIES
65 SCOTT SWAMP ROAD
FARMINGTON, CT 06032

DURA-STORM SERIES 2000 & SERIES 3000
AUTOMATIC SLIDING GLASS DOOR
(BI-PART, NON-REINFORCED, LMI)

REMARKS	DRWN	CHKD	DATE
INIT ISSUE	-	-	4/18/02
2004 FBC	CL	FLB	8/12/05
REVISE HARDWARE	KL	CL	12/18/07
2007 FBC	RKB	CL	03/11/09

05-SAT-0024
PAGE SCALE: -
DESCRIPTION:
STANLEY DWG #413924
DURA-STORM 2000

1 / 10

03/12/2009 - 1:20pm rbartlett F:\01 Project Files\Stanley (SAT)\2005 Jobs\05-SAT-0024 Dura Storm 2-3000 Auto SGD, Non-Reinf (NOA)\05-SAT-0024_03a Dura-Storm 2000 & 3000 Auto SGD, Non-Reinf (NOA).dwg

ANCHOR TYPE

IN CONCRETE: Ø1/4" POWERS PERMASEAL TAPPER CONCRETE SCREW EMBEDDED 1 1/2" MIN.
IN STEEL: 1/4-20 SMS SAE GRADE 5 OR BETTER (NOTE 3/16" A-36 STEEL MIN.)
IN WOOD: #14 WOOD SCREW EMBEDDED 1 1/2" MIN.
(NOTE: MINIMUM 2X4 WOODBUCK FOR WOOD SCREWS)

ANCHOR SPACING

SILL: DOUBLE ROWS, 4" FROM EACH CORNER WITH REMAINDER SPACED AT 13" O.C.
HEAD: SINGLE ROW, 4" FROM EACH CORNER WITH REMAINDER SPACED AT 10" O.C.
JAMBS: SINGLE ROW, 2" FROM BOTTOM CORNER WITH REMAINDER SPACED AT 10" O.C.

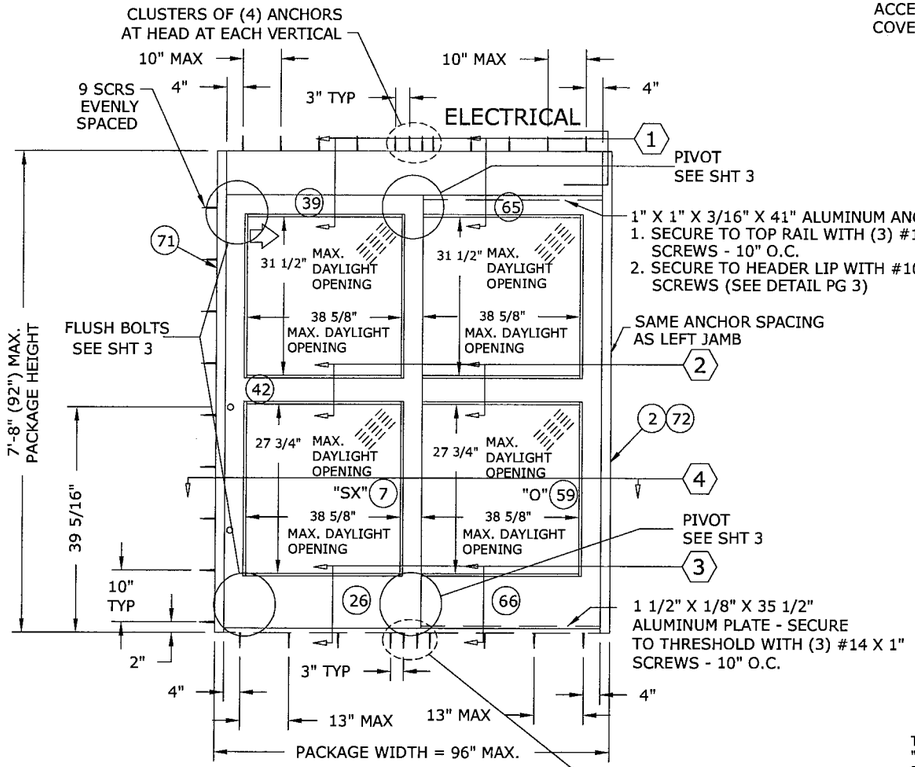

EXTERIOR ELEVATION

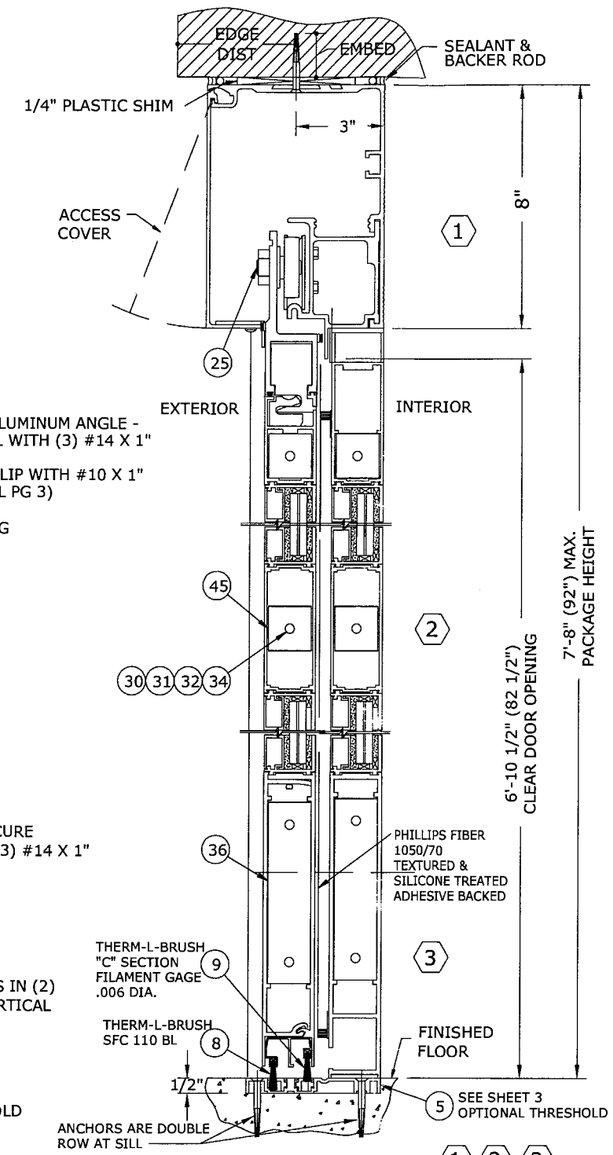

VERTICAL SECTION 1 2 3

PACKAGE HEIGHT INFORMATION FOR SURFACE APPLICATIONS			
PACKAGE HEIGHT	MASONRY OPENING	CAULKING ALLOWANCE	ACTUAL CLEAR OPG UNDER HEADER
7'-8" (92")	7'-8 1/4" (92 1/4")	1/4"	6'-10 1/2" (82 1/2")

PACKAGE WIDTH INFORMATION						
PKG WIDTH	SLIDING DOOR OPENING	(SX) DOOR WIDTH	(SO) DOOR WIDTH	DOOR TRAVEL	MASONRY OPENING	CAULKING ALLOWANCE
8'-0" (96")	38 1/4"	48 9/16"	48 9/16"	38 1/4"	8'-1/2" (96 1/2")	1/4" / SIDE

DESIGN PRESSURE RATING (LARGE MISSILE IMPACT)		
	WHERE WATER INFILTRATION REQUIREMENT IS NEEDED.	WHERE WATER INFILTRATION REQUIREMENT IS NOT NEEDED.
POSITIVE	NOT APPROVED	+ 56 PSF
NEGATIVE	NOT APPROVED	- 56 PSF

GENERAL NOTES:
REFER TO GENERAL NOTES ON SHEET 1

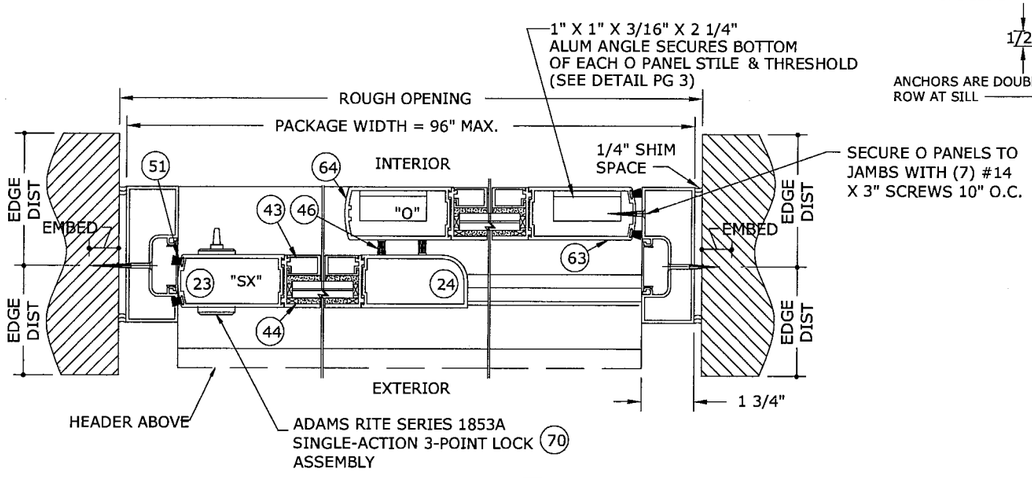

HORIZONTAL SECTION 4

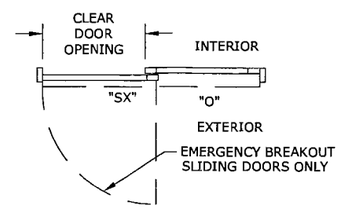

PLAN VIEW

PRODUCT REVISED
as complying with the Florida Building Code
Acceptance No. 09-0323.26
Expiration Date APRIL 18, 2012
By Ishwar L. Chanda
Miami Dade Product Control Division

FRANK L. BENNARDO, P.E.
PE0046549
03/12/2009
ENGINEERING EXPRESS®
160 SW 12th AVENUE, #106
DEERFIELD BEACH, FL 33442
Ph: (954) 354-0660 Fax: (954) 354-0443
WWW.ENGEXP.COM
CERT OF AUTH #9865
A FRANK L. BENNARDO, P.E., INC. INNOVATION

STANLEY®
ACCESS TECHNOLOGIES
65 SCOTT SWAMP ROAD
FARMINGTON, CT 06032

DURA-STORM SERIES 2000 & SERIES 3000
AUTOMATIC SLIDING GLASS DOOR
(BI-PART, NON-REINFORCED, LMI)

REMARKS	DRWN	CHKD	DATE
INIT ISSUE	-	-	4/18/02
2004 FBC	CL	FLB	8/12/05
REVISE HARDWARE	KL	CL	12/18/07
2007 FBC	RKB	CL	03/11/09
-	-	-	-

05-SAT-0024
PAGE SCALE: -
DESCRIPTION:
STANLEY DWG #413924
DURA-STORM 2000

10

2

F:\01 Project Files\Stanley (SAT)\2005 Jobs\05-SAT-0024 Dura Storm 2-3000 Auto SGD, Non-Reinf (NOA)\05-SAT-0024_03a Dura-Storm 2000 & 3000 Auto SGD, Non-Reinf (NOA).dwg
03/12/2009 - 1:20pm rbartlett

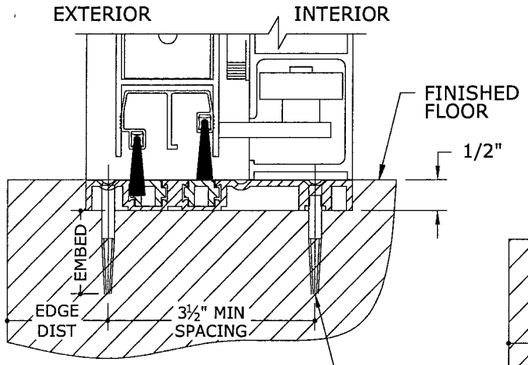

515262

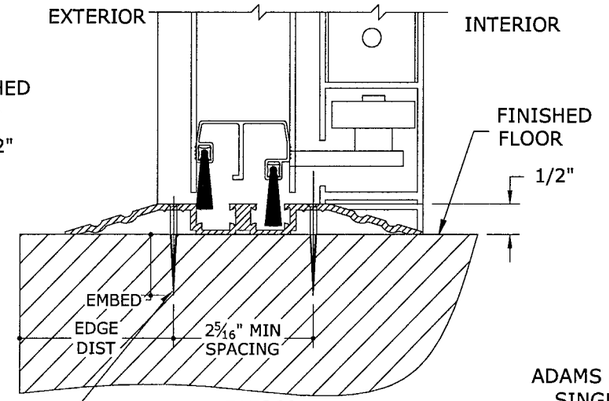

515260

ANCHORS AT SILL ARE DOUBLE ROW

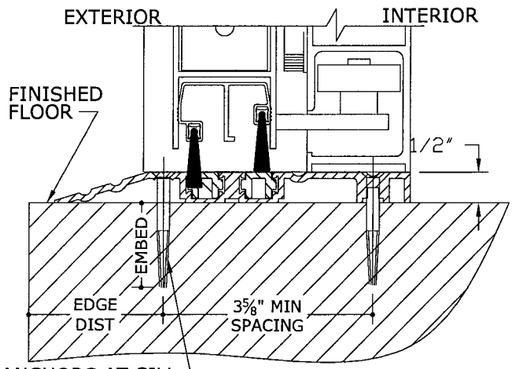

ANCHORS AT SILL ARE DOUBLE ROW

516339

THRESHOLD OPTIONS

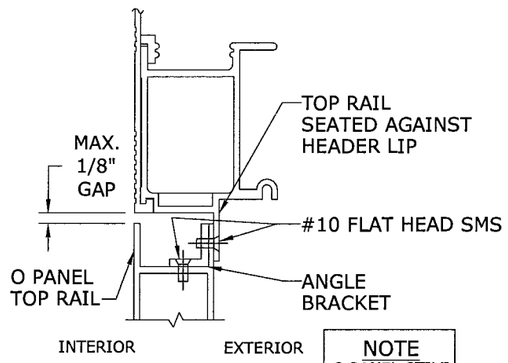

DETAIL

ATTACHING THE O PANEL TO THE HEADER LIP

NOTE
O PANEL STILE REMOVED FOR CLARITY

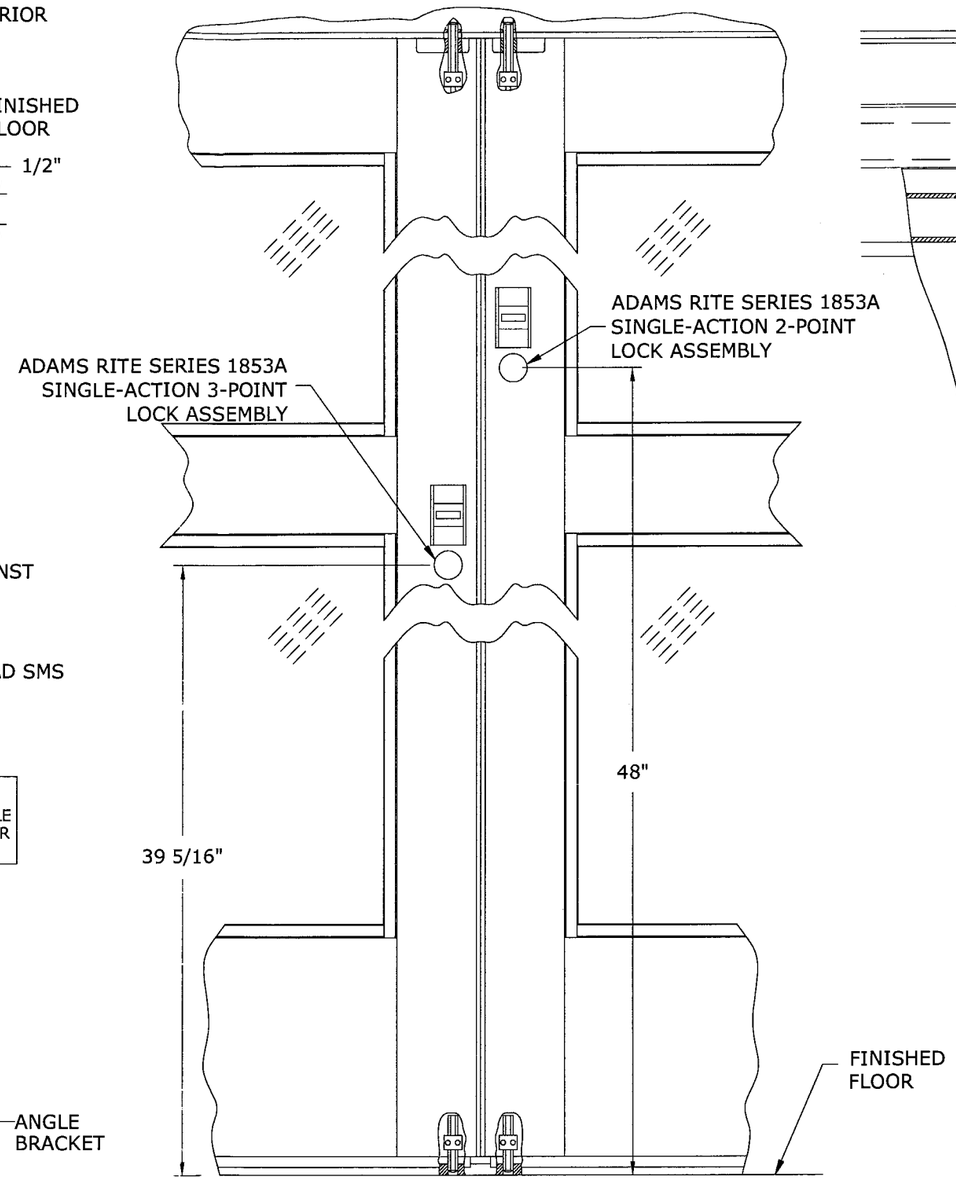

FLUSH BOLT DETAIL (VIEW FROM INTERIOR)

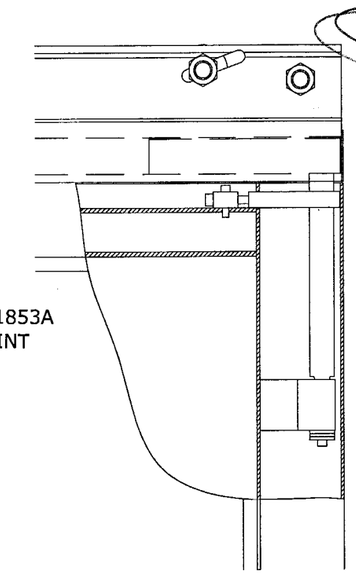

SX TOP PIVOT

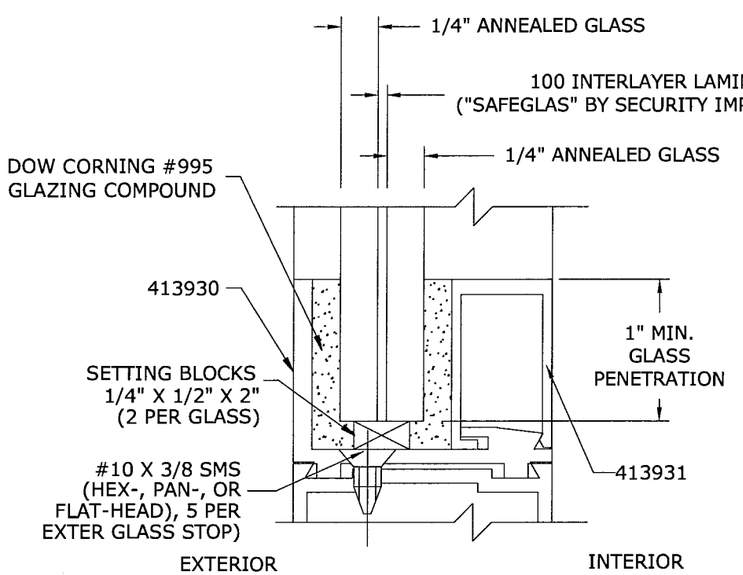

GLAZING DETAIL

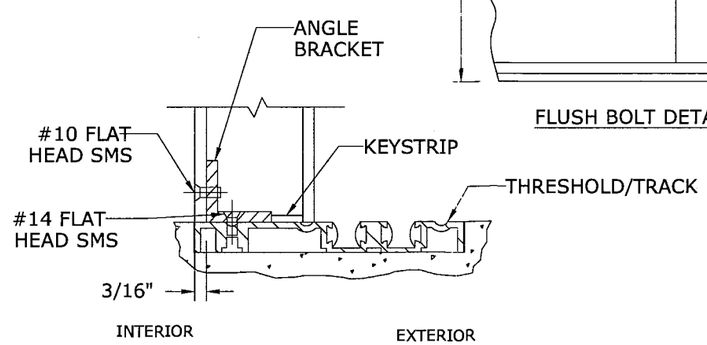

DETAIL

O PANEL INSTALLED OVER KEYSTRIP AND ANGLE BRACKETS

PRODUCT REVISED
as complying with the Florida Building Code
Acceptance No 09-0323.26
Expiration Date APRIL 18, 2012
By Ishan I. Chanda
Miami Dade Product Control Division

FRANK L. BENNARDO, P.E.
PE0046549
03/12/2009

ENGINEERING EXPRESS®
160 SW 12th AVENUE, #106
DEERFIELD BEACH, FL 33442
PH: (954) 354-0660 FAX: (954) 354-0443
WWW.ENGEXP.COM
CERT OF AUTH #9885
A FRANK L. BENNARDO, P.E., INC. INNOVATION

STANLEY®
ACCESS TECHNOLOGIES
65 SCOTT SWAMP ROAD
FARMINGTON, CT 06032

DURA-STORM SERIES 2000 & SERIES 3000
AUTOMATIC SLIDING GLASS DOOR
(BI-PART, NON-REINFORCED, LMI)

REMARKS	DRWN	CHKD	DATE
INIT ISSUE	-	-	4/18/02
2004 FBC	CL	FLB	8/12/05
REVISE HARDWARE	KL	CL	12/18/07
2007 FBC	RKB	CL	03/11/09
	-	-	-

05-SAT-0024

PAGE SCALE: -
DESCRIPTION:
STANLEY DWG #413924
DURA-STORM 2000

10

3

03/12/2009 - 1:20pm rbartlett F:\01 Project Files\Stanley (SAT)\2005 Jobs\05-SAT-0024 Dura Storm 2-3000 Auto SGD, Non-Reinf (NOA)\05-SAT-0024_03a Dura-Storm 2000 & 3000 Auto SGD, Non-Reinf (NOA).dwg

NO.	QTY	PART NO.	DESCRIPTION
1	1		DURA-STORM 2000 BI-PART
2	2	413089-1	JAMB INSERT
3	1	412858	JAMB, 4.500 X 1.750 X .100
4	1	412858	JAMB, 4.500 X 1.750 X .100
5	2	516339	THRESHOLD
	1	515262	THRESHOLD
6A	1	515686	HEADER COVER, 8.468 X 1.968 X .109
6B	1	110755	HEADER, 8.00 X 6.00 X .140
6C	1	515056	HEADER TRACK TUBE, 4.624 X 3.110 X .125
6D	1	413859	FOAM BLOCK - RH
6E	1	413869	FOAM BLOCK - LH
7	1	157514-1	DOOR PANEL, SX - RH
8	1	713241	THERM-L-BRUSH
9	1	710739	THERM-L-BRUSH
10	1	516711	FLUSH BOLT GUIDE
12	1	413830	DAMPER ASSEMBLY
13	1	380901499	NUT, HEX JAM, 5/16-18
14	1	353367000	SCREW, SHC-SK, 5/16-18 X 2.0 LG
15	1	412638	LABEL, CAUTION
16	1	713754	SPIDER, LOCK ROD
17	1	412571	BLOCK-ANCHOR
18	1	412572	SPACER-PILLOW BLOCK
19	2	353349000	SCREW, SHM-SK, 1/4-20 X 1.0 LG
20	2	312073499	SCREW, FHM-PH, 1/4-20 X 2.0 LG
21a	2	709221	LOCK, THUMBTURN
21b	2	AR4561	OPTIONAL AR4561 DEAD LATCH LEVER
22	2	351801499	SCREW, SHC-SK, 1/4-20 X 3/8 LG
23	1	413795	STILE, LOCK-SX, RH, 3.531 X 1.750 X .125
24	1	413796	STILE, PIVOT-SX, RH, 3.531 X 1.750 X .130
25	1	111879-2	HANGER ASSEMBLY-SX, RH
26	1	111434	RAIL, BOTTOM, 9.625 X 1.735 X .140
27	4	312008960	SCREW, FHM-PH, #8-32 X 5/8LG
28	4	413821	ADAMS RITE SERIES 1853A SINGLE-ACTION 2-POINT LOCK
29	2	413811	ROD ASSEMBLY, THROWBOLT
30	6	711475	WASHER, TIE ROD
31	4	711474	NUT, TIE ROD
32	4	711483	ROD, TIE, 5/16-18 UNC-1A, STEEL, FULL LENGTH OF RAIL
33	2	413162	EXIT INDICATOR
34	8	706233	NUT, FLANGED
35	1	413810	ADAMS RITE SERIES 1853A SINGLE-ACTION 3-POINT LOCK
36	2	516338	CLIP, GUIDE
37	1	516704	BOTTOM STRUT
38	1	516699	DETENT-DOOR PORTION
39	1	413840	RAIL, TOP-SX, RH, 2.875 X 1.735 X .093
40	2	706668	LOCK, CYLINDER
41	1	413805-6	SWEEP HOLDER
42	1	111916-2	BAR, MUNTIN, 4.250 X 1.735 X .093
43	8	413931	STOP, GLASS, IMPACT, 1.125 X .669
44	8	413930	GUTTER, IMPACT, 1.219 X 1.735
45	4	412479	CLIP, GUIDE
46	1	411624	PILE, ADHESIVE BACKED
47	2	413857	FOAM BLOCK
48	1	413858	FOAM BLOCK
49	1	413856	FOAM BLOCK
50	3	710240	PLUG, SNAP IN
51	16	712044-1	PILE

NO.	QTY	PART NO.	DESCRIPTION
52	1	157513-1	DOOR PANEL, SX - LH
			SAME AS 157514-1 EXCEPT AS NOTED
53	2	312251960	SCREW, FHM-PH, #10-32 X 1/2 LG
54	1	516692	STRIKE PLATE ASSEMBLY
55	1	413795	STILE, STRIKE-SX, LH, 3.531 X 1.750 X .125
56	1	413796	STILE, PIVOT-SX, LH, 3.531 X 1.750 X .130
57	1	111879-1	HANGER ASSEMBLY-SX, LH
58	1	157563-2	RAIL, TOP-SX, LH, 2.875 X 1.735 X .093
59	1	157515	DOOR PANEL, O - RH
			SAME AS 157514-1 EXCEPT AS NOTED
61	1	712175	LOGO, STANLEY
62	1	411842	BREAK OUT SWITCH
63	1	413795	STILE, TRAILING, O-RH, 3.531 X 1.750 X .125
64	1	412944	STILE, LEAD, O-RH, 3.531 X 1.750 X .130
65	1	412606	RAIL, TOP, O
66	1	111435	RAIL, BOTTOM, 10.000 X 1.735 X .140
67	1	157516	DOOR PANEL, O - LH
			SAME AS 157515 EXCEPT AS NOTED
68	1	412944	STILE, LEAD, O-LH, 3.531 X 1.750 X .130
69	1		DURA-STORM 2000 SINGLE SLIDE
			SAME AS BI-PART EXCEPT AS NOTED
70	1	515258	ADAMS RITE SERIES 1853A SINGLE-ACTION 3-POINT LOCK
71	1	110797-1	JAMB ASSEMBLY, LEFT HAND
72	1	110798-1	JAMB ASSEMBLY, RIGHT HAND

NOTE: ALL EXTRUSIONS
ARE MADE FROM
6063-T6 ALUMINUM

PRODUCT REVISED
as complying with the Florida
Building Code
Acceptance No. 09-0323.26
Expiration Date APRIL 18, 2012
By
Miami Dade Product Control
Division

REMARKS	DRWN	CHKD	DATE
INIT ISSUE	-	-	4/18/02
2004 FBC	CL	FLB	8/12/05
REVISE HARDWARE	KL	CL	12/18/07
2007 FBC	RKB	CL	03/11/09
-	-	-	-

STANLEY®
ACCESS TECHNOLOGIES
65 SCOTT SWAMP ROAD
FARMINGTON, CT 06032

DURA-STORM SERIES 2000 & SERIES 3000
AUTOMATIC SLIDING GLASS DOOR
(BI-PART, NON-REINFORCED, LMI)

ENGINEERING EXPRESS®
160 SW 12th AVENUE, #106
DEERFIELD BEACH, FL 33442
PH: (954) 354-0660 FAX: (954) 354-0443
WWW.ENGEXP.COM
CERT OF AUTH #9885
A FRANK L. BENNARDO, P.E., INC. INNOVATION

FRANK L. BENNARDO, P.E.
PE0046549
03/12/2009

4

10

DURA-STORM 2000
STANLEY DWG #413924
DESCRIPTION:
PAGE SCALE: -
05-SAT-0024

EXTRUSIONS

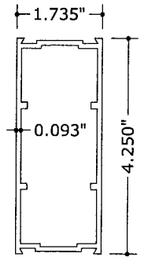

42 MUNTIN BAR
N.T.S. 6063-T6

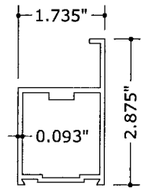

39 58 TOP RAIL, SX
N.T.S. 6063-T6

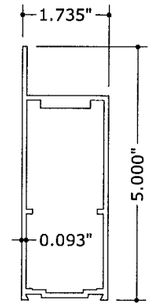

65 TOP RAIL, O & SO
N.T.S. 6063-T6

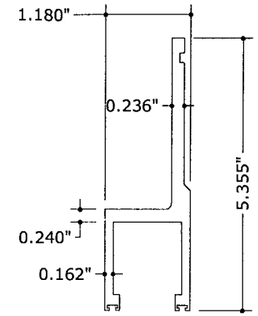

25 57 HANGER
N.T.S. 6063-T6

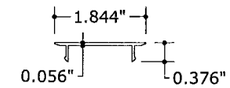

2 JAMB INSERT
N.T.S. 6063-T6

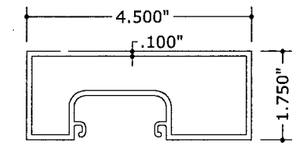

3 4 JAMB 4 1/2
N.T.S. 6063-T6

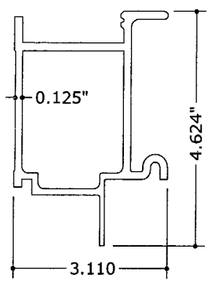

6C TRACK TUBE
N.T.S. 6063-T6

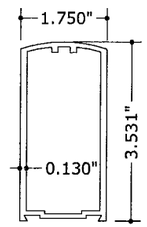

63 64 68 STILE LEAD
N.T.S. 6063-T6

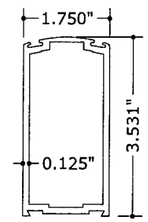

23 55 STILE LOCK
N.T.S. 6063-T6

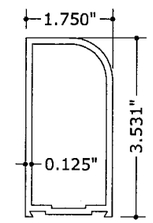

24 56 STILE PIVOT
N.T.S. 6063-T6

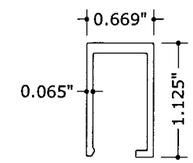

43 GLASS STOP
N.T.S. 6063-T6

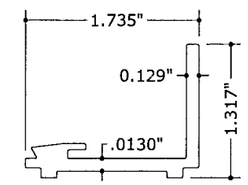

44 GUTTER
N.T.S. 6063-T6

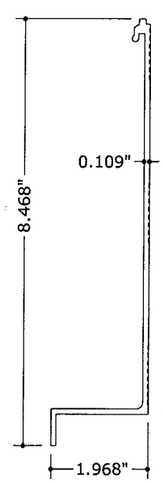

6A HEADER COVER
N.T.S. 6063-T6

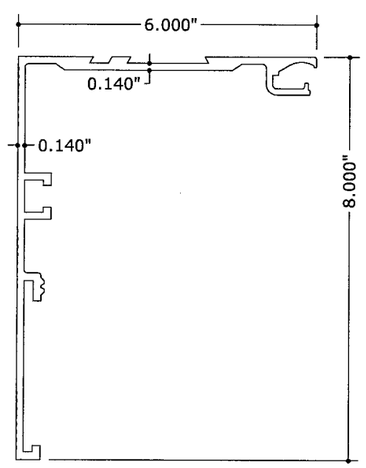

6B HEADER
N.T.S. 6063-T6

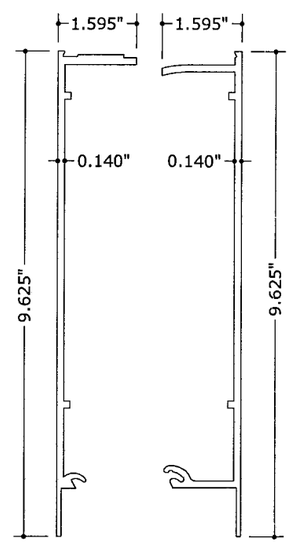

26 BOTTOM RAIL, O
N.T.S. 6063-T6

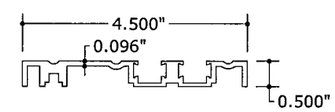

5 THRESHOLD
N.T.S. 6063-T6

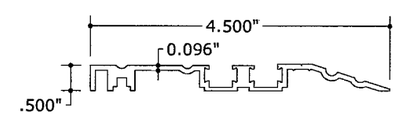

5 ALT THRESHOLD
N.T.S. 6063-T6

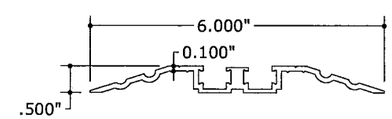

5 ALT THRESHOLD
N.T.S. 6063-T6

PRODUCT REVISED
as complying with the Florida Building Code
Acceptance No 09-0323.26
Expiration Date APRIL 18, 2012
By
Miami Dade Product Control Division

FRANK L. BENNARDO, P.E.
PE0046549
03/12/2009
ENGINEERING EXPRESS®
160 SW 12th AVENUE, #106
DEERFIELD BEACH, FL 33442
PH: (954) 354-0660 FAX: (954) 354-0443
WWW.ENGEXP.COM
CERT OF AUTH #9885
A FRANK L. BENNARDO, P.E., INC. INNOVATION

STANLEY®
ACCESS TECHNOLOGIES
65 SCOTT SWAMP ROAD
FARMINGTON, CT 06032

DURA-STORM SERIES 2000 & SERIES 3000
AUTOMATIC SLIDING GLASS DOOR
(BI-PART, NON-REINFORCED, LMI)

REMARKS	DRWN	CHKD	DATE
INIT ISSUE	-	-	4/18/02
2004 FBC	CL	FLB	8/12/05
REVISE HARDWARE	KL	CL	12/18/07
2007 FBC	RKB	CL	03/11/09
	-	-	-

05-SAT-0024

PAGE SCALE: -
DESCRIPTION:
STANLEY DWG #413924
DURA-STORM 2000

10

5

03/12/2009 - 1:20pm rbartlett F:\01 Project Files\Stanley (SAT)\2005 Jobs\05-SAT-0024 Dura Storm 2-3000 Auto SGD, Non-Reinf (NOA)\05-SAT-0024_03a Dura-Storm 2000 & 3000 Auto SGD, Non-Reinf (NOA).dwg

DURA-STORM 3000

NON-REINFORCED BI-PART AUTOMATIC SLIDING GLASS DOOR LARGE MISSILE IMPACT RESISTANT

ANCHOR TYPE

IN CONCRETE (3000 PSI MIN): Ø1/4" POWERS PERMASEAL TAPPER WITH 1 1/2" MIN EMBED AND 3" MIN EDGE DIST
IN A36 STEEL (3/16" MIN THICKNESS): 1/4-20 SMS SAE GRADE 5 OR BETTER
IN WOOD (G=0.55 MIN): #14 WOOD SCREW WITH 1 1/2" MIN EMBED AND 3/4" MIN EDGE DIST
(NOTE: MINIMUM 2X4 WOODBUCK FOR WOOD SCREWS)

ANCHOR SPACING

SILL: DOUBLE ROWS, 4" FROM EACH CORNER WITH REMAINDER SPACED AT 13" O.C.
HEAD: SINGLE ROW, 4" FROM EACH CORNER WITH REMAINDER SPACED AT 10" O.C.
JAMBS: SINGLE ROW, 2" FROM BOTTOM CORNER WITH REMAINDER SPACED AT 10" O.C.

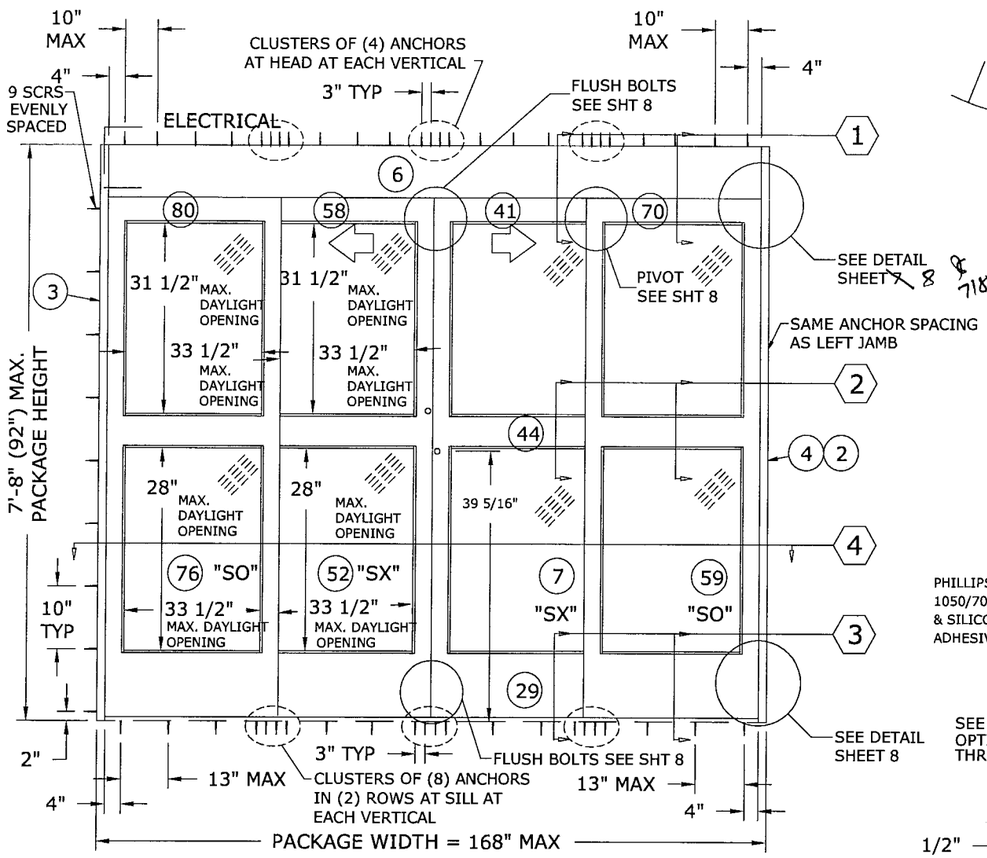

EXTERIOR ELEVATION

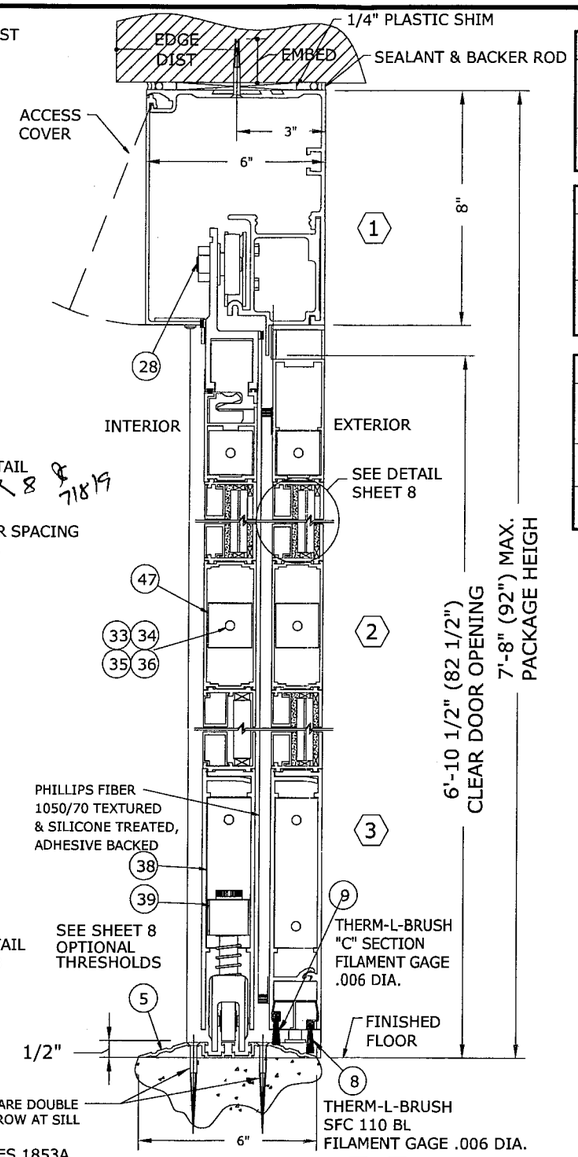

VERTICAL SECTION 1 2 3

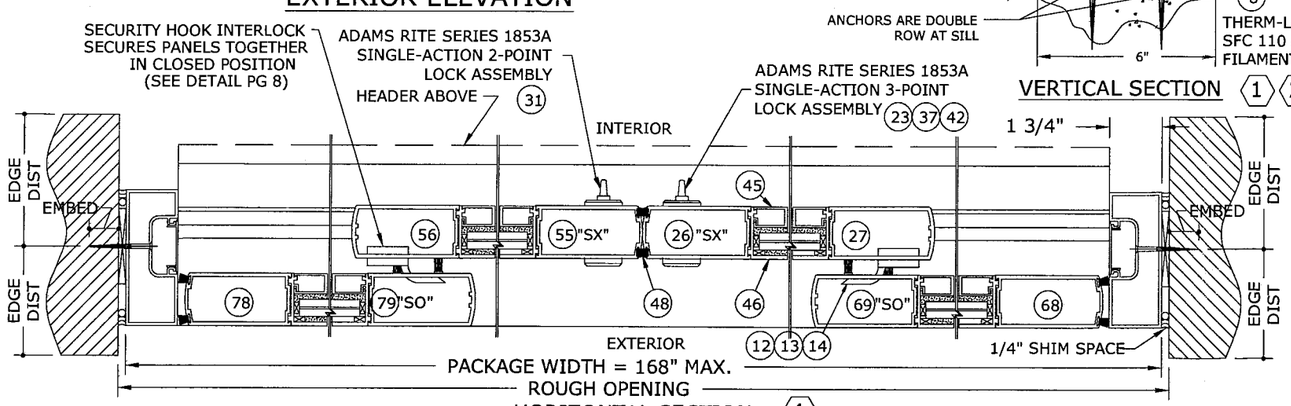

HORIZONTAL SECTION 4

PACKAGE HEIGHT INFORMATION FOR SURFACE APPLICATIONS			
PACKAGE HEIGHT	MASONRY OPENING	CAULKING ALLOWANCE	ACTUAL CLEAR OPG UNDER HEADER
7'-8" (92")	7'-8 1/4" (92 1/4")	1/4"	6'-10 1/2" (82 1/2")

PACKAGE WIDTH INFORMATION						
PKG WIDTH	SLIDING DOOR OPENING	(SX) DOOR WIDTH	(SO) DOOR WIDTH	DOOR TRAVEL	MASONRY OPENING	CAULKING ALLOWANCE
14'-0" (168")	66 1/4"	43 7/16"	43 7/16"	33 1/8"	14'-1/2" (168 1/2")	1/4" / SIDE

DESIGN PRESSURE RATING (LARGE MISSILE IMPACT)		
	WHERE WATER INFILTRATION REQUIREMENT IS NEEDED.	WHERE WATER INFILTRATION REQUIREMENT IS NOT NEEDED.
POSITIVE	NOT APPROVED	+ 56 PSF
NEGATIVE	NOT APPROVED	- 56 PSF

GENERAL NOTES:
REFER TO GENERAL NOTES ON SHEET 1

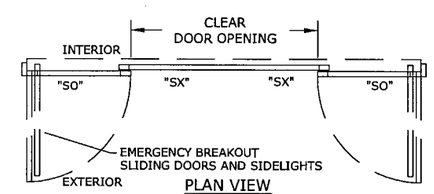

PLAN VIEW

PRODUCT REVISED
as complying with the Florida Building Code
Acceptance No. 09-0323.26
Expiration Date APRIL 18, 2012
By Glenn L. Chandler
Miami Dade Product Control Division

FRANK L. BENNARDO, P.E.
PE0046549
03/12/2009

ENGINEERING EXPRESS®
160 SW 12th AVENUE, #106
DEERFIELD BEACH, FL 33442
Ph: (954) 354-0660 Fax: (954) 354-0443
WWW.ENGEXP.COM
CERT OF AUTH #9885
A FRANK L. BENNARDO, P.E., INC. INNOVATION

STANLEY®
ACCESS TECHNOLOGIES
65 SCOTT SWAMP ROAD
FARMINGTON, CT 06032

DURA-STORM SERIES 2000 & SERIES 3000
AUTOMATIC SLIDING GLASS DOOR
(BI-PART, NON-REINFORCED, LMI)

REMARKS	DRWN	CHKD	DATE
INIT ISSUE	-	-	4/18/02
2004 FBC	CL	FLB	8/12/05
REVISE HARDWARE	KL	CL	12/18/07
2007 FBC	RKB	CL	03/11/09
	-	-	-

05-SAT-0024
PAGE SCALE: -
DESCRIPTION:
STANLEY DWG #413924
DURA-STORM 3000

03/12/2009 - 1:21pm rbartlett F:\01 Project Files\Stanley (SAT)\2005 Jobs\05-SAT-0024 Dura Storm 2-3000 Auto SGD, Non-Reinf (NOA)\05-SAT-0024_03a Dura-Storm 2000 & 3000 Auto SGD, Non-Reinf (NOA).dwg

ANCHOR TYPE

IN CONCRETE: Ø1/4" POWERS PERMASEAL TAPPER CONCRETE SCREW EMBEDDED 1 1/2" MIN.
IN STEEL: 1/4-20 SMS SAE GRADE 5 OR BETTER (NOTE 3/16" A-36 STEEL MIN.)
IN WOOD: #14 WOOD SCREW EMBEDDED 1 1/2" MIN.
(NOTE: MINIMUM 2X4 WOODBUCK FOR WOOD SCREWS)

ANCHOR SPACING

SILL: DOUBLE ROWS, 4" FROM EACH CORNER WITH REMAINDER SPACED AT 13" O.C.
HEAD: SINGLE ROW, 4" FROM EACH CORNER WITH REMAINDER SPACED AT 10" O.C.
JAMBS: SINGLE ROW, 2" FROM BOTTOM CORNER WITH REMAINDER SPACED AT 10" O.C.

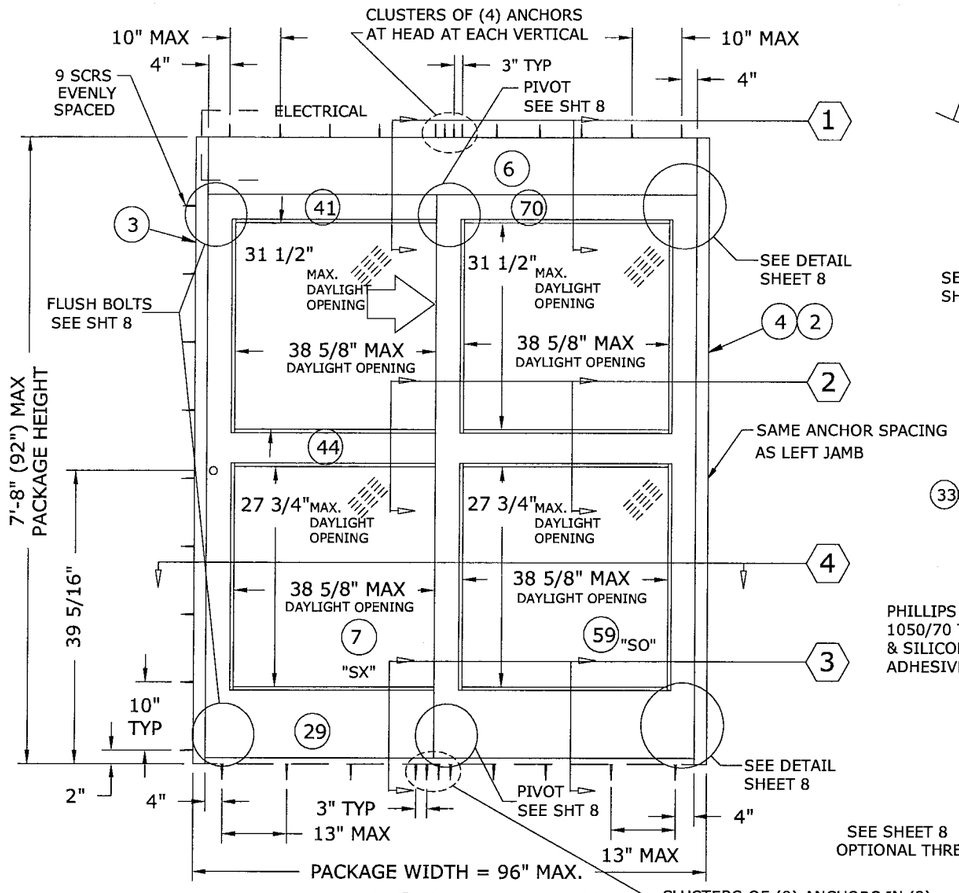

EXTERIOR ELEVATION

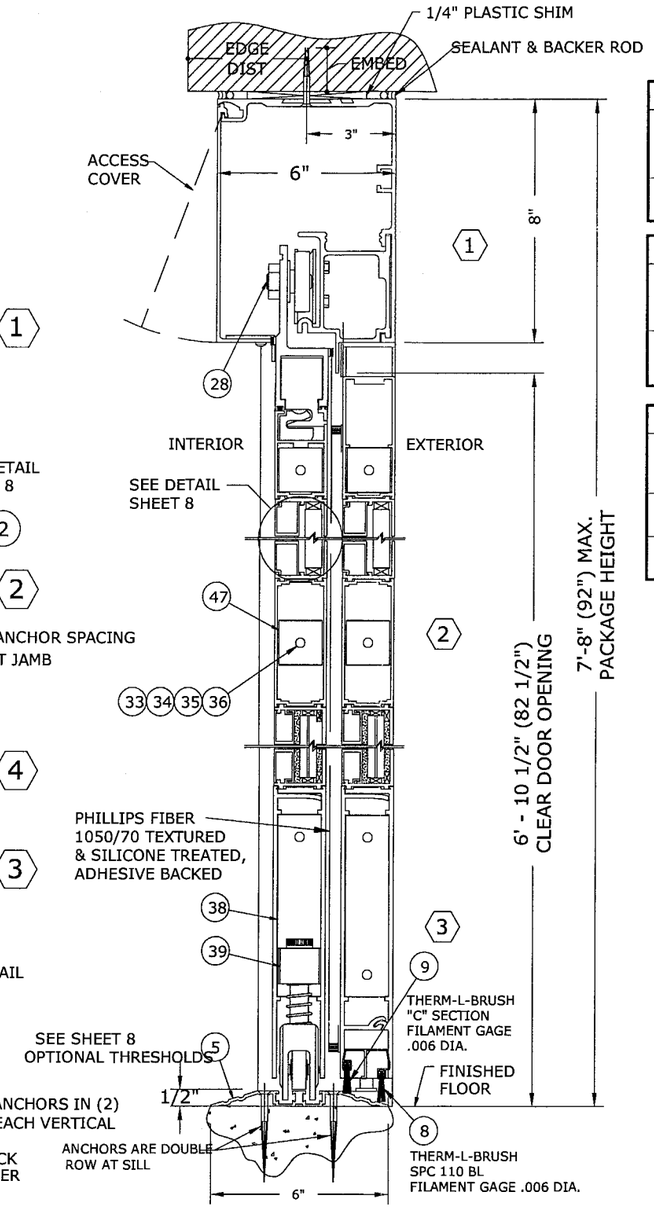

VERTICAL SECTION

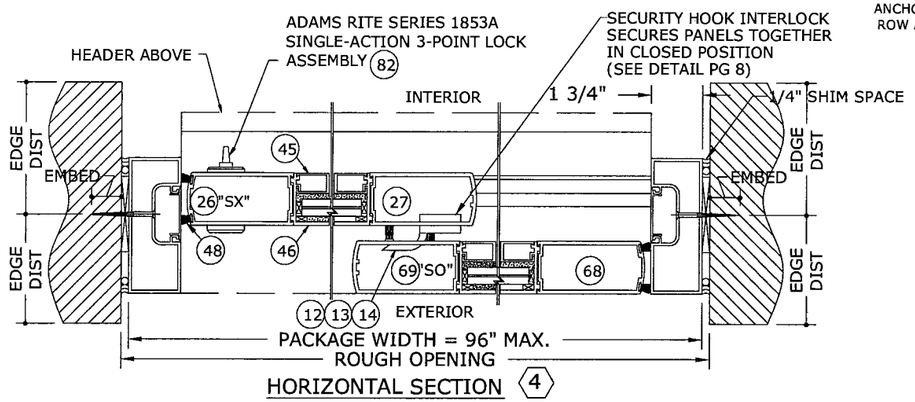

HORIZONTAL SECTION

PACKAGE HEIGHT INFORMATION FOR SURFACE APPLICATIONS			
PACKAGE HEIGHT	MASONRY OPENING	CAULKING ALLOWANCE	ACTUAL CLEAR OPG UNDER HEADER
7'-8" (92")	7'-8 1/4" (92 1/4")	1/4"	6'-10 1/2" (82 1/2")

PACKAGE WIDTH INFORMATION						
PKG WIDTH	SLIDING DOOR OPENING	(SX) DOOR WIDTH	(SO) DOOR WIDTH	DOOR TRAVEL	MASONRY OPENING	CAULKING ALLOWANCE
8'-0" (96")	38 1/4"	48 9/16"	48 9/16"	38 1/4"	8'-1/2" (96 1/2")	1/4" / SIDE

DESIGN PRESSURE RATING (LARGE MISSILE IMPACT)		
	WHERE WATER INFILTRATION REQUIREMENT IS NEEDED.	WHERE WATER INFILTRATION REQUIREMENT IS NOT NEEDED.
POSITIVE	NOT APPROVED	+ 56 PSF
NEGATIVE	NOT APPROVED	- 56 PSF

GENERAL NOTES:
REFER TO GENERAL NOTES ON SHEET 1

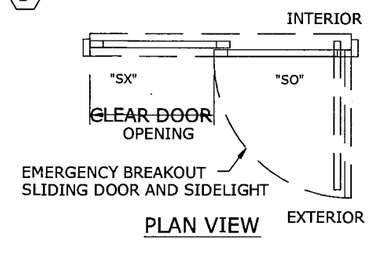

PLAN VIEW

PRODUCT REVISED
as complying with the Florida Building Code
Acceptance No. 09-0323.26
Expiration Date APRIL 18, 2012
By Ishag I. Chanda
Miami Dade Product Control Division

FRANK L. BENNARDO, P.E.
PE0046549
03/12/2009
ENGINEERING EXPRESS®
160 SW 12th AVENUE, #106
DEERFIELD BEACH, FL 33442
PH: (954) 354-0660 FAX: (954) 354-0443
WWW.ENGEXP.COM
CERT OF AUTH #9885
A FRANK L. BENNARDO, P.E., INC. INNOVATION

STANLEY®
ACCESS TECHNOLOGIES
65 SCOTT SWAMP ROAD
FARMINGTON, CT 06032

DURA-STORM SERIES 2000 & SERIES 3000
AUTOMATIC SLIDING GLASS DOOR
(BI-PART, NON-REINFORCED, LMI)

REMARKS	DRWN	CHKD	DATE
INIT ISSUE	-	-	4/18/02
2004 FBC	-	FLB	8/12/05
REVISE HARDWARE	CL	CL	12/18/07
2007 FBC	RKB	CL	03/11/09
-	-	-	-

05-SAT-0024
PAGE SCALE: -
DESCRIPTION:
STANLEY DWG #413924
DURA-STORM 3000

7 / 10

F:\01 Project Files\Stanley (SAT)\2005 Jobs\05-SAT-0024 Dura Storm 2-3000 Auto SGD, Non-Reinf (NOA)\05-SAT-0024_03a Dura-Storm 2000 & 3000 Auto SGD, Non-Reinf (NOA).dwg
03/12/2009 - 1:21pm rbartlett

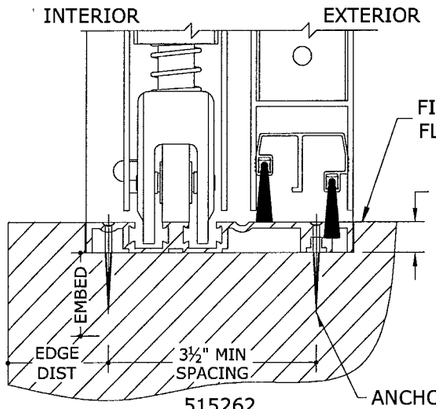

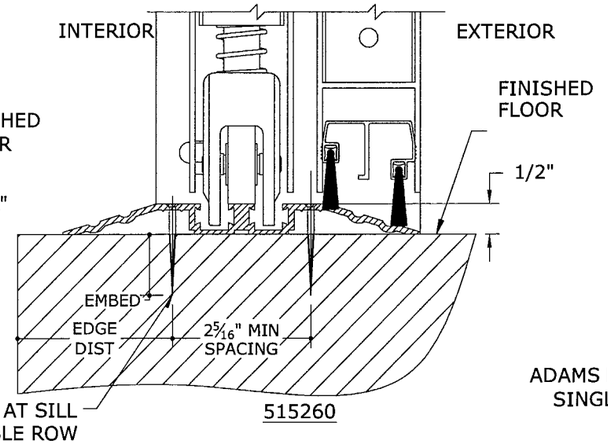

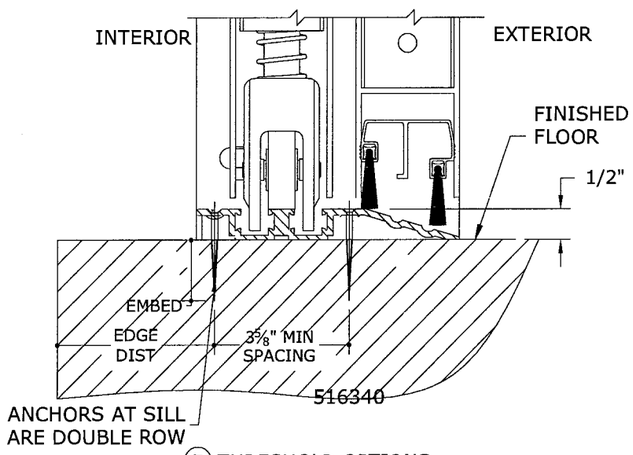

5 THRESHOLD OPTIONS

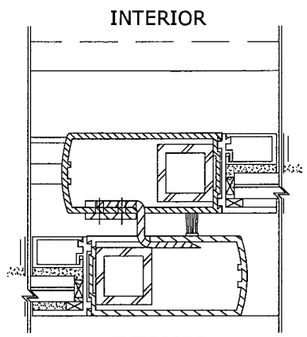

DETAIL
SECURITY HOOK INTERLOCK
(REF. PG 5)

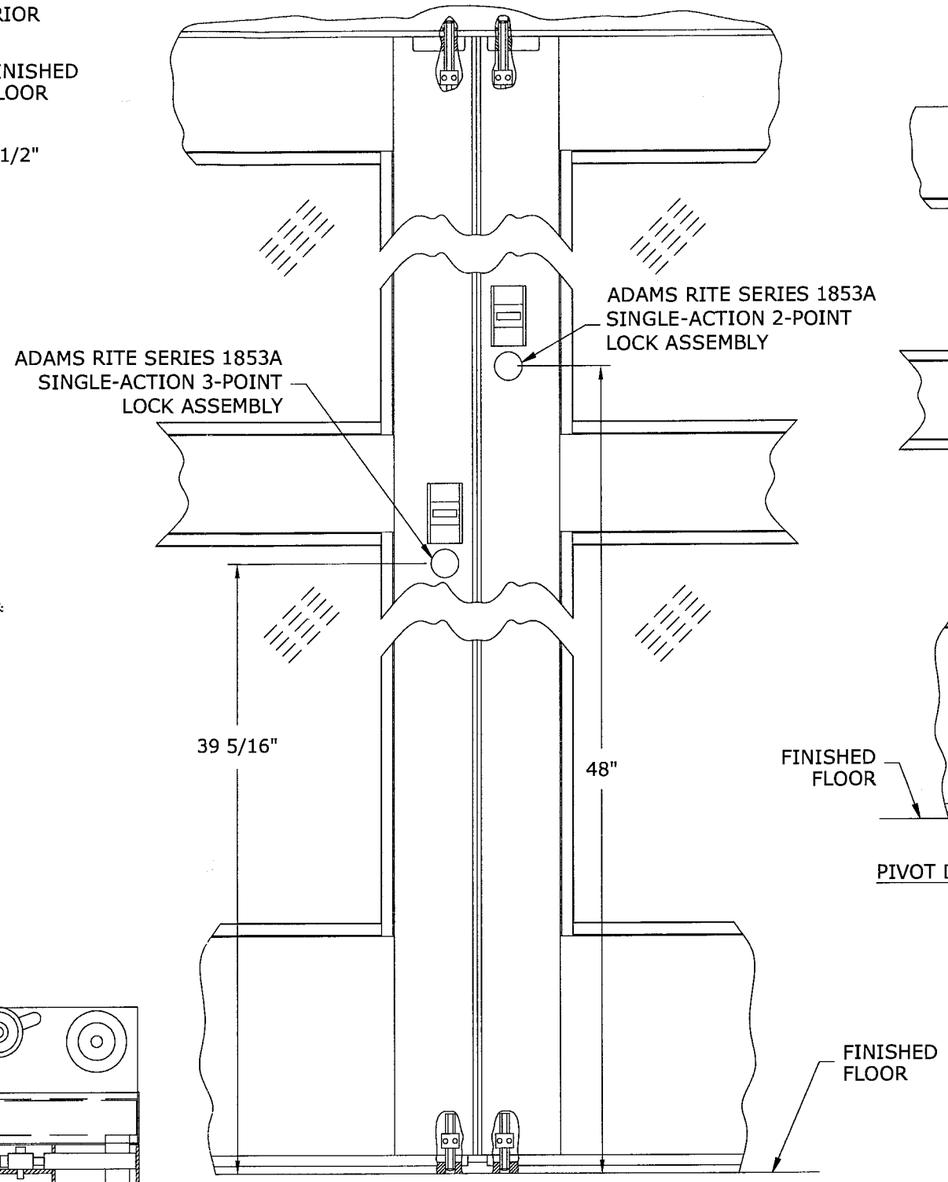

FLUSH BOLT DETAIL (VIEW FROM INTERIOR)

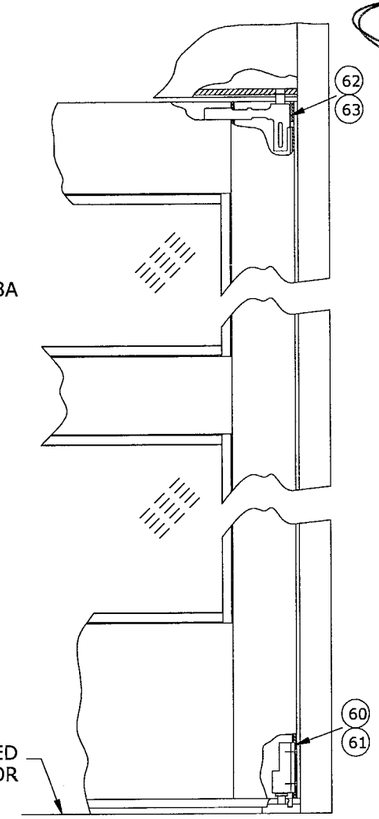

PIVOT DETAIL STATIONARY PANEL

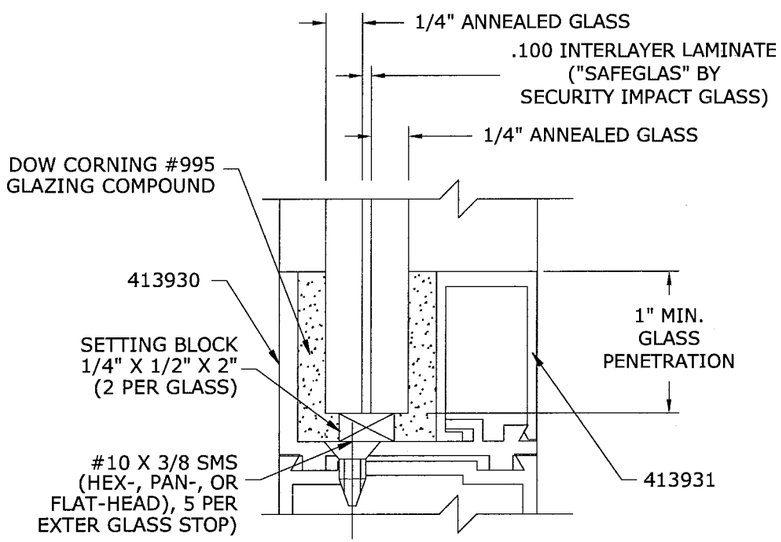

GLAZING DETAIL

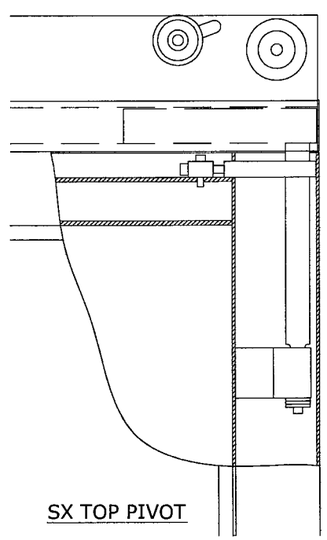

SX TOP PIVOT

PRODUCT REVISED
as complying with the Florid
Building Code
Acceptance No 09-0323.26
Expiration Date APRIL 18, 2012
By Ishaq V. Chanda
Miami Dade Product Control
Division

FRANK L. BENNARDO, P.E.
PE0046549
03/12/2009

ENGINEERING EXPRESS®
160 SW 12th AVENUE, #106
DEERFIELD BEACH, FL 33442
Ph: (954) 354-0660 Fax: (954) 354-0443
WWW.ENGEXP.COM
CERT OF AUTH #9885
A. FRANK L. BENNARDO, P.E., INC. INNOVATION

STANLEY®
ACCESS TECHNOLOGIES
65 SCOTT SWAMP ROAD
FARMINGTON, CT 06032

DURA-STORM SERIES 2000 & SERIES 3000
AUTOMATIC SLIDING GLASS DOOR
(BI-PART, NON-REINFORCED, LMI)

REMARKS	DRWN	CHKD	DATE
INIT ISSUE	-	-	4/18/02
2004 FBC	CL	FLB	8/12/05
REVISE HARDWARE	KL	CL	12/18/07
2007 FBC	RKB	CL	03/11/09
-	-	-	-

05-SAT-0024
PAGE SCALE: -
DESCRIPTION:
STANLEY DWG #413924
DURA-STORM 3000

10

8

F:\01 Project Files\Stanley (SAT)\2005 Jobs\05-SAT-0024 Dura Storm 2-3000 Auto SGD, Non-Reinf (NOA)\05-SAT-0024_03a Dura-Storm 2000 & 3000 Auto SGD, Non-Reinf (NOA).dwg
03/12/2009 - 1:21pm rbartlett

NO.	QTY	PART NO.	DESCRIPTION
1	1		DURA-STORM 3000 BI-PART, IMPACT
2	2	413089-1	JAMB INSERT
3	1	412858	JAMB, 4.500 X 1.750 X .100
4	1	412858	JAMB, 4.500 X 1.750 X .100
5	1	515260	THRESHOLD
	1	516339	THRESHOLD
	1	515262	THRESHOLD
	1	516340	THRESHOLD
6A	1	515686	HEADER COVER, 8.468 X 1.968 X .109
6B	1	110755	HEADER, 8.000 X 6.000 X .140
6C	1	515056	HEADERTRACK TUBE, 4.624 X 3.110 X .125
6D	1	413859	FOAM BLOCK - RH
6E	1	413869	FOAM BLOCK - LH
7	1	157508	DOOR PANEL, SX - RH
8	1	713241	THERM-L-BRUSH
9	1	710739	THERM-L-BRUSH
10	2	516711	FLUSH BOLT GUIDE
11	12	312063499	SCREW, FHM-PH 1/4-20 X 1/2 LG
12	2	713823	REINFORCEMENT, SECURITY HOOK, OUTSIDE
13	2	713822	REINFORCEMENT, SECURITY HOOK, INSIDE
14	2	713821	HOOK, SECURITY, MEDIUM STILE
15	1	380901499	NUT, HEX JAM, 5/16-18
16	1	353367000	SCREW, SHC-SK, 5/16-18 X 2.0 LG
17	1	412638	LABEL, CAUTION
18	2	413162	EXIT INDICATOR
19	1	412571	BLOCK-ANCHOR
20	1	412572	SPACER-PILLOW BLOCK
21	2	353349000	SCREW, SHM-SK, 1/4-20 X 1.0 LG
22	2	312073499	SCREW, FHM-PH, 1/4-20 X 2.0 LG
23a	2	709221	LOCK, THUMBTURN
23b	2	AR4550	OPTIONAL AR4550 DEAD LATCH LEVER
24	2	351801499	SCREW, SHC-SK, 1/4-20 X 3/8 LG
25	4	713321	SCREW, FHC-SK, #10-32 X 3/8 LG
26	1	413795	STILE, LOCK-SX, RH, 3.531 X 1.750 X .125
27	1	412944	STILE, PIVOT-SX, RH, 3.531 X 1.750 X .130
28	1	111879-2	HANGER ASSEMBLY-SX, RH
29	1	516329	RAIL, BOTTOM-SX, 9.625 X 1.595 X .140
30	4	312008960	SCREW, FHM-PH, #8-32 X 5/8LG
31	4	413821	ADAMS RITE SERIES 1853A SINGLE-ACTION 2-POINT LOCK
32	2	413811	ROD ASS'Y, THROWBOLT ADAMS RITE 31-0278
33	6	711475	WASHER, TIE ROD
34	4	711474	NUT, TIE ROD
35	4	711483	ROD, TIE, 5/16-18 UNC-1A, STEEL, FULL LENGTH OF RAIL
36	8	706233	NUT, FLANGED
37	1	413810	ADAMS RITE SERIES 1853A SINGLE-ACTION 3-POINT LOCK
38	2	516338	CLIP, GUIDE
39	1	515265	BOTTOM GUIDE ASSEMBLY
40	1	516224	DETENT-DOOR PORTION
41	1	412469	RAIL, TOP-SX, RH, 2.875 X 1.735 X .093
42	2	706668	LOCK, CYLINDER
43	1	413805	SWEEP HOLDER
44	1	413741	BAR, MUNTIN, 4.250 X 1.735 X .093
45	8	413931	STOP, GLASS, IMPACT, 1.125 X .669
46	8	413930	GUTTER, IMPACT,1.219 X 1.735
47	4	412479	CLIP, GUIDE
48	1	411624	PILE, ADHESIVE BACKED
49	2	413857	FOAM BLOCK
50	1	413858	FOAM BLOCK
51	1	413856	FOAM BLOCK

NO.	QTY	PART NO.	DESCRIPTION
52	1	157509	DOOR PANEL, SX - LH
			SAME AS 157508 EXCEPT AS NOTED
53	2	312251960	SCREW, FHM-PH, #10-32 X 1/2 LG
54	1	516552	STRIKE PLATE ASSEMBLY
55	1	413795	STILE, STRIKE-SX, LH, 3.531 X 1.750 X .125
56	1	412944	STILE, PIVOT-SX, LH, 3.531 X 1.750 X .130
57	1	111879-1	HANGER ASSEMBLY-SX, LH
58	1	516643-2	RAIL, TOP-SX, LH, 2.875 X 1.735 X .093
59	1	157510	DOOR PANEL, SO - RH
			SAME AS 157508 EXCEPT AS NOTED
60	2	312068499	SCREW, FHM-PH, 1/4-20 X 1.0 LG
61	1	410100	BOTTOM PIVOT-RH
62	5	713844	PIVOT-SELF TAPPING SCREW
63	1	413829	PIVOT ASSEMBLY (UPPER)-SO
64	2	711598	WIRE CLIP
65	1	712175	LOGO, STANLEY
66	1	711463-A	BREAK OUT SWITCH (MAGNET)
67	4	312024960	SCREW, FHM-PH, #10-24 X 3/8 LG
68	1	413795	STILE, TRAILING, SO-RH, 3.531 X 1.750 X .125
69	1	412944	STILE, LEAD, SO-RH, 3.531 X 1.750 X .130
70	1	415052	RAIL, TOP, SO-RH, 5.000 X 1.735 X .093
71	2	708867	BALL DETENT ASSEMBLY
73	2	312068499	SCREW, FHM-PH, 1/4-20 X 1.0 LG
74	2	713223	RIVNUT
75	1	413830	DAMPER ASSEMBLY
76	1	157511	DOOR PANEL, SO - LH
			SAME AS 157510 EXCEPT AS NOTED
77	1	410101	BOTTOM PIVOT-LH
78	1	413795	STILE, TRAILING, SO-LH, 3.531 X 1.750 X .125
79	1	412944	STILE, LEAD, SO-LH, 3.530 X 1.750 X .130
80	1	415052	RAIL, TOP, SO-LH, 5.000 X 1.735 X .093
81	1		DURA-STORM 3000 SINGLE SLIDE, IMPACT
			SAME AS BI-PART EXCEPT AS NOTED
82	1	515193	ADAMS RITE SERIES 1853A SINGLE-ACTION 3-POINT LOCK
83	2	312004960	SCREW, FHM-PH, #8-32 X 3/8 LG

NOTE: ALL EXTRUSIONS
ARE MADE FROM
6063-T6 ALUMINUM

PRODUCT REVISED
complying with the Florida
Building Code
Acceptance No. 08-0223.26
Expiration Date APRIL 18, 2012
By
Miami Dade Product Control
Division

REMARKS	DRWN	CHKD	DATE
INIT ISSUE	-	-	4/18/02
2004 FBC	CL	FLB	8/12/05
REVISE HARDWARE	KL	CL	12/18/07
2007 FBC	RKB	CL	03/11/09
-	-	-	-

STANLEY
ACCESS TECHNOLOGIES
65 SCOTT SWAMP ROAD
FARMINGTON, CT 06032

DURA-STORM SERIES 2000 & SERIES 3000
AUTOMATIC SLIDING GLASS DOOR
(BI-PART, NON-REINFORCED, LMI)

ENGINEERING EXPRESS®
160 SW 12th AVENUE, #106
DEERFIELD BEACH, FL 33442
PH: (954) 354-0660 FAX: (954) 354-0443
WWW.ENGEXP.COM
CERT OF AUTH #9885
A FRANK L. BENNARDO, P.E., INC. INNOVATION

FRANK L. BENNARDO, P.E.
#PE0046549
03/12/2009

PAGE SCALE: -
DESCRIPTION:
STANLEY DWG #413924
DURA-STORM 3000

05-SAT-0024

EXTRUSIONS

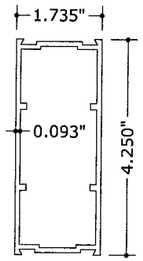

(44) MUNTIN BAR
N.T.S. 6063-T6

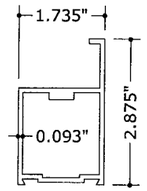

(41)(58) TOP RAIL, SX
N.T.S. 6063-T6

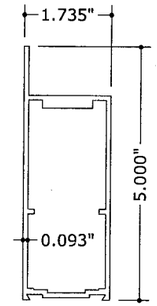

(70)(80) TOP RAIL, O & SO
N.T.S. 6063-T6

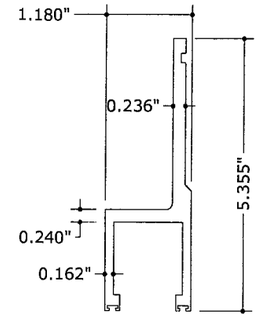

(28)(57) HANGER
N.T.S. 6063-T6

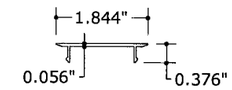

(2) JAMB INSERT
N.T.S. 6063-T6

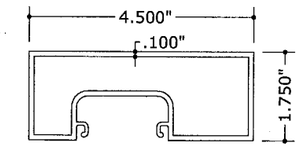

(3)(4) JAMB 4 1/2
N.T.S. 6063-T6

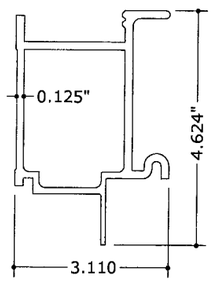

(6C) TRACK TUBE
N.T.S. 6063-T6

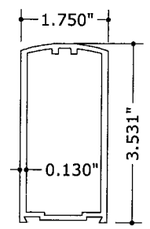

(27)(56)(68)(69)(78)(79) STILE LEAD
N.T.S. 6063-T6

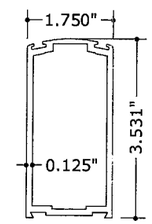

(26)(55) STILE LOCK
N.T.S. 6063-T6

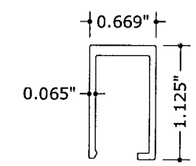

(45) GLASS STOP
N.T.S. 6063-T6

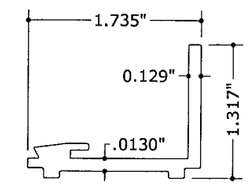

(46) GUTTER
N.T.S. 6063-T6

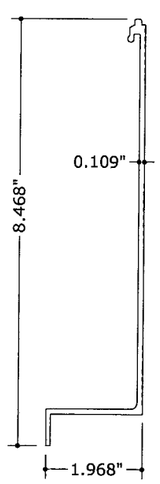

(6A) HEADER COVER
N.T.S. 6063-T6

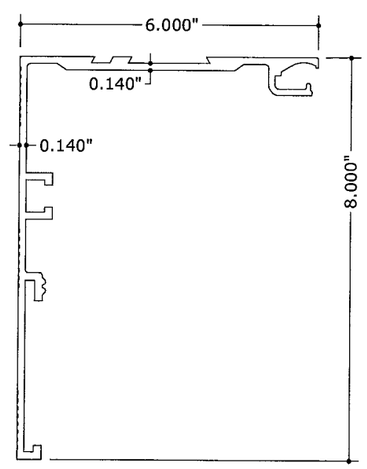

(6B) HEADER
N.T.S. 6063-T6

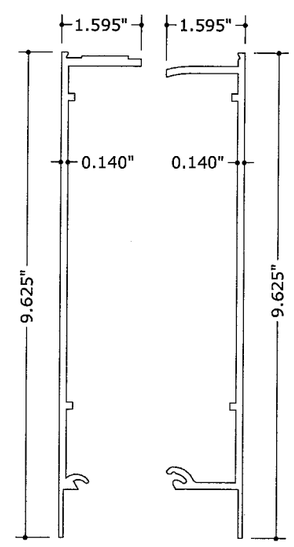

(29) BOTTOM RAIL, O
N.T.S. 6063-T6

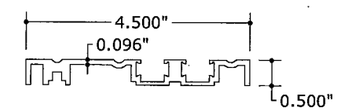

(5) THRESHOLD
N.T.S. 6063-T6

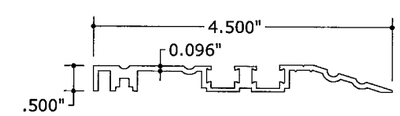

(5) ALT THRESHOLD
N.T.S. 6063-T6

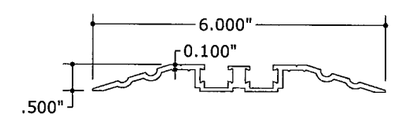

(5) ALT THRESHOLD
N.T.S. 6063-T6

PRODUCT REVISED
as complying with the Florida Building Code
Acceptance No. 09-0323.26
Expiration Date APRIL 18, 2012
By Ishaq I. Chanda
Miami Dade Product Control Division

FRANK L. BENNARDO, P.E.
PE0046549
03/12/2009

ENGINEERING EXPRESS®
160 SW 12th AVENUE, #106
DEERFIELD BEACH, FL 33442
PH: (954) 354-0660 FAX: (954) 354-0443
WWW.ENGEXP.COM
CERT OF AUTH #9885
A FRANK L. BENNARDO, P.E., INC. INNOVATION

STANLEY®
ACCESS TECHNOLOGIES
65 SCOTT SWAMP ROAD
FARMINGTON, CT 06032

DURA-STORM SERIES 2000 & SERIES 3000
AUTOMATIC SLIDING GLASS DOOR
(BI-PART, NON-REINFORCED, LMI)

REMARKS	DRWN	CHKD	DATE
INIT ISSUE	-	-	4/18/02
2004 FBC	CL	FLB	8/12/05
REVISE HARDWARE	KL	CL	12/18/07
2007 FBC	RKB	CL	03/11/09
	-	-	-

05-SAT-0024
PAGE SCALE: -
DESCRIPTION:
STANLEY DWG #413924
DURA-STORM 3000

03/12/2009 - 1:21pm rbartlett F:\01 Project Files\Stanley (SAT)\2005 Jobs\05-SAT-0024 Dura Storm 2-3000 Auto SGD, Non-Reinf (NOA)\05-SAT-0024_03a Dura-Storm 2000 & 3000 Auto SGD, Non-Reinf (NOA).dwg