MIAMI-DADE COUNTY
BUILDING CODE COMPLIANCE OFFICE (BCCO)
PRODUCT CONTROL DIVISION

MIAMI-DADE COUNTY, FLORIDA
METRO-DADE FLAGLER BUILDING
140 WEST FLAGLER STREET, SUITE 1603
MIAMI, FLORIDA 33130-1563
(305) 375-2901 FAX (305) 372-6339
www.miamidade.gov/buildingcode

NOTICE OF ACCEPTANCE (NOA)

DAB Door Company, Inc.
12195 NW 98th Avenue
Hialeah Gardens, FL 33018

SCOPE:

This NOA is being issued under the applicable rules and regulations governing the use of construction materials. The documentation submitted has been reviewed by Miami-Dade County Product Control Division and accepted by the Board of Rules and Appeals (BORA) to be used in Miami Dade County and other areas where allowed by the Authority Having Jurisdiction (AHJ).

This NOA shall not be valid after the expiration date stated below. The Miami-Dade County Product Control Division (In Miami Dade County) and/or the AHJ (in areas other than Miami Dade County) reserve the right to have this product or material tested for quality assurance purposes. If this product or material fails to perform in the accepted manner, the manufacturer will incur the expense of such testing and the AHJ may immediately revoke, modify, or suspend the use of such product or material within their jurisdiction. BORA reserves the right to revoke this acceptance, if it is determined by Miami-Dade County Product Control Division that this product or material fails to meet the requirements of the applicable building code.

This product is approved as described herein, and has been designed to comply with the Florida Building Code, including the High Velocity Hurricane Zone.

DESCRIPTION: 18'-2"Wide x 16'High Steel Sectional Garage Door w/ Window Lite Option

APPROVAL DOCUMENT: Drawing No. **99-24**, titled "Sectional Garage Door", dated 09/22/99, with last revision F dated 01/23/09, sheets 1 through 5 of 5, prepared by Al-Farooq Corporation, signed and sealed by Humayoun Farooq, P.E., bearing the Miami-Dade County Product Control revision stamp with the Notice of Acceptance number and expiration date by the Miami-Dade County Product Control Division.

MISSILE IMPACT RATING: Large and Small Missile Impact Resistant

LABELING: Each unit shall bear a permanent label with the manufacturer's name or logo, city, state and following statement: "Miami-Dade County Product Control Approved", unless otherwise noted herein.

RENEWAL of this NOA shall be considered after a renewal application has been filed and there has been no change in the applicable building code negatively affecting the performance of this product.

TERMINATION of this NOA will occur after the expiration date or if there has been a revision or change in the materials, use, and/or manufacture of the product or process. Misuse of this NOA as an endorsement of any product, for sales, advertising or any other purposes shall automatically terminate this NOA. Failure to comply with any section of this NOA shall be cause for termination and removal of NOA.

ADVERTISEMENT: The NOA number preceded by the words Miami-Dade County, Florida, and followed by the expiration date may be displayed in advertising literature. If any portion of the NOA is displayed, then it shall be done in its entirety.

INSPECTION: A copy of this entire NOA shall be provided to the user by the manufacturer or its distributors and shall be available for inspection at the job site at the request of the Building Official.

This NOA **revises NOA # 08-1106.05** and consists of this page 1 and evidence pages E-1 and E-2, as well as approval document mentioned above.

The submitted documentation was reviewed by **Carlos M. Utrera, P.E.**

MIAMI-DADE COUNTY APPROVED

4/11/09

NOTICE OF ACCEPTANCE: EVIDENCE SUBMITTED

A. DRAWINGS

1. Drawing No. **99-24**, titled "Sectional Garage Door", dated 09/22/99, with last revision F dated 01/23/09, sheets 1 through 5 of 5, prepared by Al-Farooq Corporation, signed and sealed by Humayoun Farooq, P.E.

B. TESTS

1. Test reports on 1) Uniform Static Air Pressure Test, Loading per FBC TAS 202-94
   2) Large Missile Impact Test per FBC, TAS 201-94
   3) Cyclic Wind Pressure Loading per FBC, TAS 203-94
   4) Forced Entry Test, per FBC 2411 3.2.1, TAS 202-94

   along with marked-up drawings and installation diagram of a DAB 824 24 GA Sectional Residential Garage Door, prepared by Hurricane Engineering & Testing, Inc, Test Reports No. **HETI-08-2133A** and **B**, dated 06/10/08, signed and sealed by Candido F. Font, P.E.
2. Test reports on 1) Uniform Static Air Pressure Test, Loading per FBC TAS 202-94
   2) Large Missile Impact Test per FBC, TAS 201-94
   3) Cyclic Wind Pressure Loading per FBC, TAS 203-94
   4) Forced Entry Test, per FBC 2411 3.2.1, TAS 202-94

   along with marked-up drawings and installation diagram of a DAB 824 24 GA Sectional Garage Door, prepared by Hurricane Engineering & Testing, Inc, Test Reports No. **HETI-08-2149A/B**, dated 06/27/08, signed and sealed by Candido F. Font, P.E.
3. Test report on Tensile Test per ASTM E 8 of the above sectional garage door's skin, prepared by Hurricane Engineering & Testing, Inc, Test Report No. **HETI-08-T139/A**, dated 06/27/08, signed and sealed by Candido F. Font, P.E.
   "Submitted under NOA # 08-1106.05"
4. Test report on Salt Spray (Corrosion) Test per ASTM B 117 of a painted G-40 steel panels, prepared by Celotex Corporation, Test Report No. **258592**, dated 08/17/98, signed by W. A. Jackson, P.E.
   "Submitted under NOA # 03-0210.04"

C. CALCULATIONS

1. Anchor verification calculations and structural analysis prepared by Al-Farooq Corporation, complying with F.B.C 2004/2007, dated 01/20/09, signed and sealed by Humayoun Farooq, P.E.
2. Anchor verification calculations and structural analysis prepared by Al-Farooq Corporation, complying with F.B.C 2004/2007, dated 08/25/08, signed and sealed by Humayoun Farooq, P.E.
   "Submitted under NOA # 08-1106.05"

4/11/09

Carlos M. Utrera, P.E.
Product Control Examiner
NOA No. 09-0324.07
Expiration Date: March 10, 2013
Approval Date: May 06, 2009

NOTICE OF ACCEPTANCE: EVIDENCE SUBMITTED

D. QUALITY ASSURANCE

1. Miami Dade Building Code Compliance Office (BCCO)

E. MATERIAL CERTIFICATIONS

1. Notice of Acceptance No. **08-0305.02**, issued to SABIC Innovative Plastics, for their Lexan Sheet Products, approved on 04/24/08 and expiring on 07/17/13.
2. Notice of Acceptance No. **07-1016.07**, issued to Insulfoam, LLC, for their Insulfoam Expanded Polystyrene Insulation, approved on 11/29/07 and expiring on 11/29/12.
3. Notice of Acceptance No. **07-1107.08**, issued to Dyplast Products, LLC, for their Expanded Polystyrene Block Type Insulation, approved on 04/26/07 and expiring on 08/27/08.
4. Notice of Acceptance No. **07-0301.10**, issued to Dyplast Products, LLC, for their Dyplast ISO-C1 Polyisocyanurate Insulation, approved on 06/07/07 and expiring on 01/11/12.
5. Test Report on Accelerated Weathering Using Xenon Arc Light Apparatus Test per ASTM G155 of "PVC Extrusion Material", prepared by Hurricane Engineering & Testing, Inc., Report No. **HETI 04-A002**, dated 09/27/04, signed and sealed by Rafael E. Droz-Seda, P.E.
6. Test Reports on Tensile Test per ASTM D638 of "PVC Extrusion Material", prepared by Hurricane Engineering & Testing Inc., Report No. **HETI 04-T251,** dated 11/29/04 signed and sealed by I. Ghia, P.E.
7. Test Report on Self-Ignition Temperature Test, Rate of Burn Test and Smoke Density Test of "REHAU non-foam PVC extrusion material", prepared by ETC Laboratories, Report No. **04-761-15019.0**, dated 05/06/04, signed and sealed by J. L. Doldan, P.E. ***"Submitted under NOA # 05-0228.02"***

F. STATEMENTS

1. Statement letter of code conformance issued by Al-Farooq Corporation, dated 01/20/09, signed and sealed by Humayoun Farooq, P.E.
2. Statement letter of no financial interest issued by Al-Farooq Corporation, dated 08/25/08, signed and sealed by Humayoun Farooq, P.E.
3. Laboratory code compliance statements issued by Hurricane Engineering & Testing, Inc, for Test Reports No. **HETI-08-2149A/B B** and **HETI-08-T139/A**, dated 06/10/08 and 06/27/08, all signed and sealed by Candido F. Font, P.E.

G. OTHER

1. Notice of Acceptance No. **08-1106.05**, issued to DAB Door Company, Inc, approved on 12/18/08 and expiring on 03/10/13.

4/11/09

Carlos M. Utrera, P.E.
Product Control Examiner
NOA No. 09-0324.07
Expiration Date: March 10, 2013
Approval Date: May 06, 2009

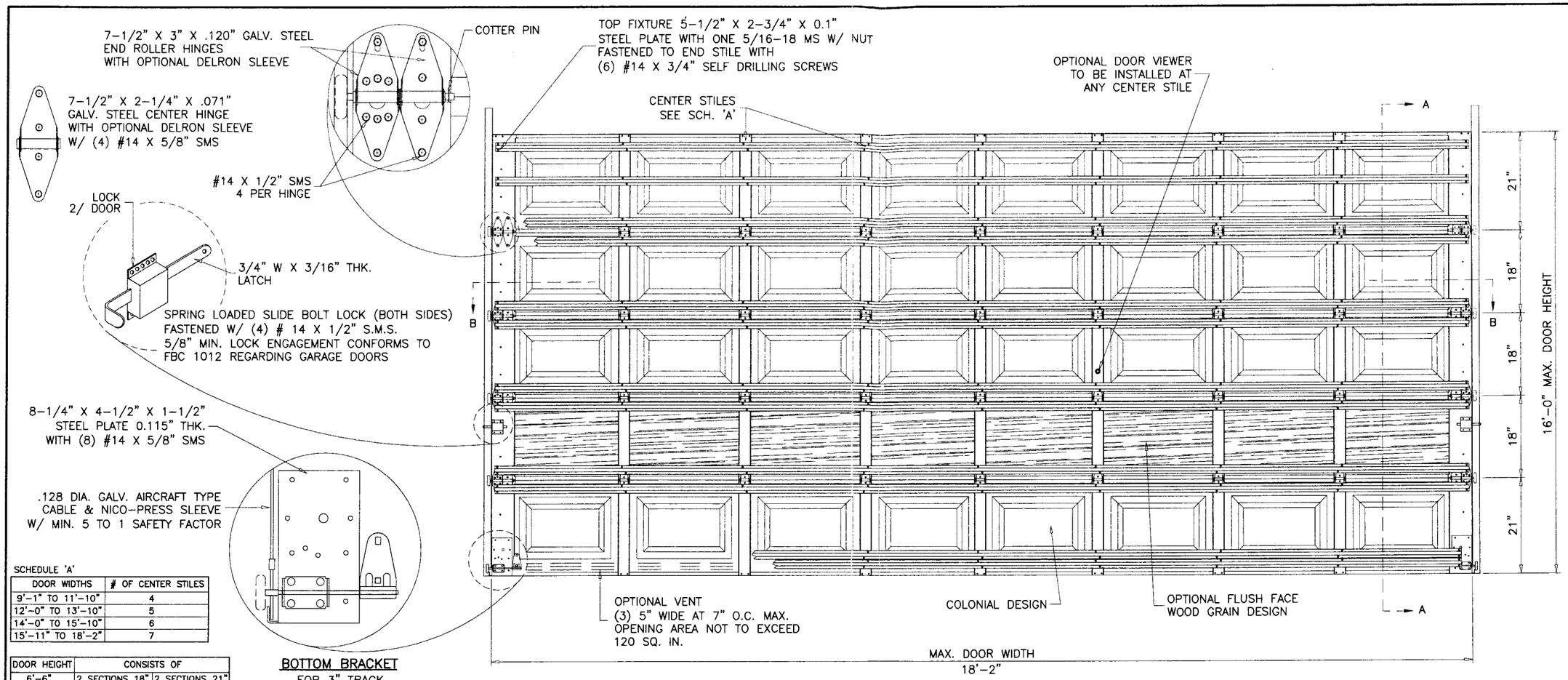

SCHEDULE 'A'

DOOR WIDTHS	# OF CENTER STILES
9'-1" TO 11'-10"	4
12'-0" TO 13'-10"	5
14'-0" TO 15'-10"	6
15'-11" TO 18'-2"	7

DOOR HEIGHT	CONSISTS OF	
6'-6"	2 SECTIONS 18"	2 SECTIONS 21"
6'-9"	1 SECTION 18"	3 SECTIONS 21"
7'	4 SECTIONS 21"	–
7'-3"	–	–
7'-6"	5 SECTIONS 18"	–
7'-9"	4 SECTIONS 18"	1 SECTION 21"
8'	3 SECTIONS 18"	2 SECTIONS 21"
8'-3"	2 SECTIONS 18"	3 SECTIONS 21"
8'-6"	1 SECTION 18"	4 SECTIONS 21"
8'-9"	5 SECTIONS 21"	–
9'	6 SECTIONS 18"	–
9'-3"	5 SECTIONS 18"	1 SECTION 21"
9'-6"	4 SECTIONS 18"	2 SECTIONS 21"
9'-9"	3 SECTIONS 18"	3 SECTIONS 21"
10'	2 SECTIONS 18"	4 SECTIONS 21"
10'-3"	1 SECTION 18"	5 SECTIONS 21"
10'-6"	6 SECTIONS 21"	–
10'-9"	6 SECTIONS 18"	1 SECTION 21"
11'	5 SECTIONS 18"	2 SECTIONS 21"
11'-3"	4 SECTIONS 18"	3 SECTIONS 21"
11'-6"	3 SECTIONS 18"	4 SECTIONS 21"
11'-9"	2 SECTIONS 18"	5 SECTIONS 21"
12'	1 SECTIONS 18"	6 SECTIONS 21"
12'-3"	7 SECTIONS 21"	–
12'-6"	6 SECTIONS 18"	2 SECTIONS 21"
12'-9"	5 SECTIONS 18"	3 SECTIONS 21"
13'	4 SECTIONS 18"	4 SECTIONS 21"
13'-3"	3 SECTIONS 18"	5 SECTIONS 21"
13'-6"	2 SECTIONS 18"	6 SECTIONS 21"
13'-9"	1 SECTION 18"	7 SECTIONS 21"
14'	8 SECTIONS 21"	–
14'-3"	6 SECTIONS 18"	3 SECTIONS 21"
14'-6"	5 SECTIONS 18"	4 SECTIONS 21"
14'-9"	4 SECTIONS 18"	5 SECTIONS 21"
15'	3 SECTIONS 18"	6 SECTIONS 21"
15'-3"	2 SECTIONS 18"	7 SECTIONS 21"
15'-6"	1 SECTION 18"	8 SECTIONS 21"
15'-9"	9 SECTIONS 21"	–
16'	6 SECTIONS 18"	4 SECTIONS 21"

BOTTOM BRACKET
FOR 3" TRACK

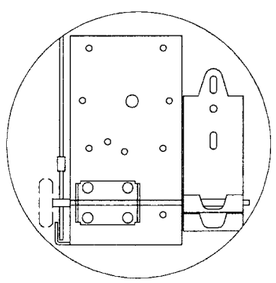

BOTTOM BRACKET
FOR 2" TRACK

INSIDE ELEVATION
RAISED PANEL EMBOSSED DOOR

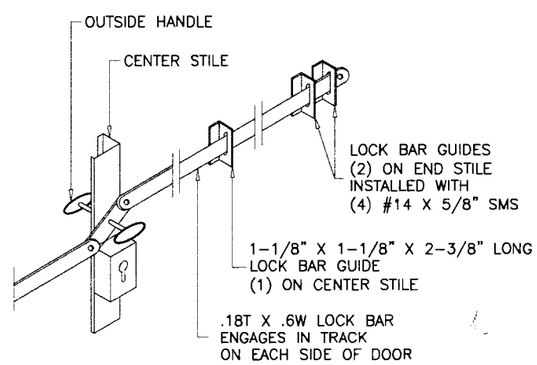

OUTSIDE KEYED LOCK
LOCK BAR LOCKING SHOWN
ALTERNATE TO LOCKS SHOWN ABOVE

THIS PRODUCT IS RATED FOR LARGE MISSILE IMPACT

GENERAL NOTES

1. THIS PRODUCT HAS BEEN DESIGNED AND TESTED TO COMPLY WITH THE REQUIREMENTS OF THE FLORIDA BUILDING CODE 2004/2007 EDITION INCLUDING HIGH VELOCITY HURRICANE ZONE.
2. ANCHORS SHALL BE AS LISTED, SPACED AS SHOWN ON DETAILS. ANCHOR EMBEDMENT TO BASE MATERIAL SHALL BE BEYOND WALL DRESSING OR STUCCO.
3. ALL BOLTS, NUTS AND WASHERS SHALL BE ZINC PLATED CARBON STEEL.
4. ANCHORING OR LOADING CONDITIONS OTHER THAN THOSE SHOWN IN THESE DETAILS ARE NOT PART OF THIS APPROVAL.
5. A LOAD DURATION INCREASE IS USED IN DESIGN OF ANCHORS INTO WOOD ONLY.

DESIGN PRESSURE RATING = + 55.0 PSF
– 64.0 PSF

DAB DOOR MODEL 824
MAX. SIZE 18'-2" WIDE X 16'-0" HIGH

Engr. DR. HUMAYOUN FAROOQ
STRUCTURES
FLA. PE # 16557
C.A.N. 3538

FEB 03 2009

PRODUCT REVISED
as complying with the Florida Building Code
Acceptance No 07-0324.07
Expiration Date 03/10/2013
By
Miami Dade Product Control Division

AL-FAROOQ CORPORATION
ENGINEERS & PRODUCT DEVELOPMENT
1235 S.W. 87 AVE
MIAMI, FLORIDA 33174
TEL. (305) 264-8100 FAX. (305) 262-6978

GARAGE\99-24DAB

SECTIONAL GARAGE DOOR

DAB DOORS INC.
12195 N.W. 98 TH. AVE.
HIALEAH GARDENS, FL. 33018
TEL. (305) 556 – 6624

revisions:

no	date	by	description
B	02.01.03		UPDATED FOR FBC
C	8.11.05	H	UPDATED FOR 2004 FBC
D	02.28.06		REV. PER BCCO COMMENTS
E	03.28.08		GENERAL REVISION
F	01.23.09		GENERAL REVISION

date: 09-22-99
scale: 1/2"=1'-0"
dr. by: HAMID
chk. by:

drawing no.
99-24

sheet 1 of 5

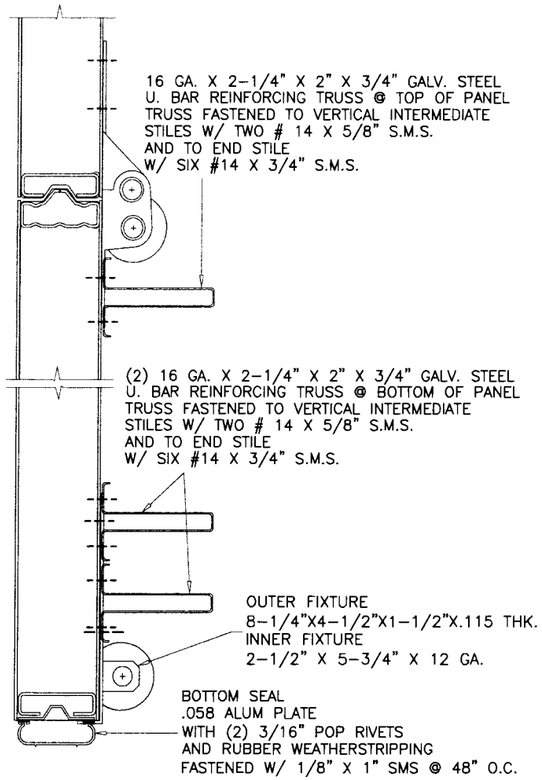

1ST SECTION (BOTTOM)

REINFORCING

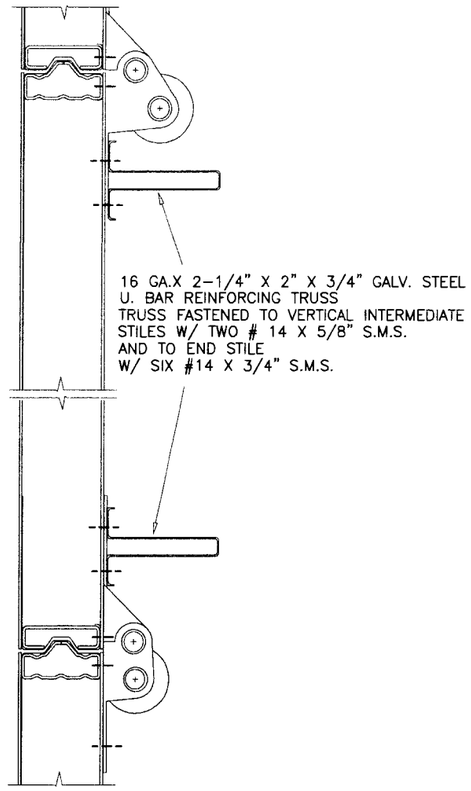

INTERMEDIATE SECTIONS

REINFORCING

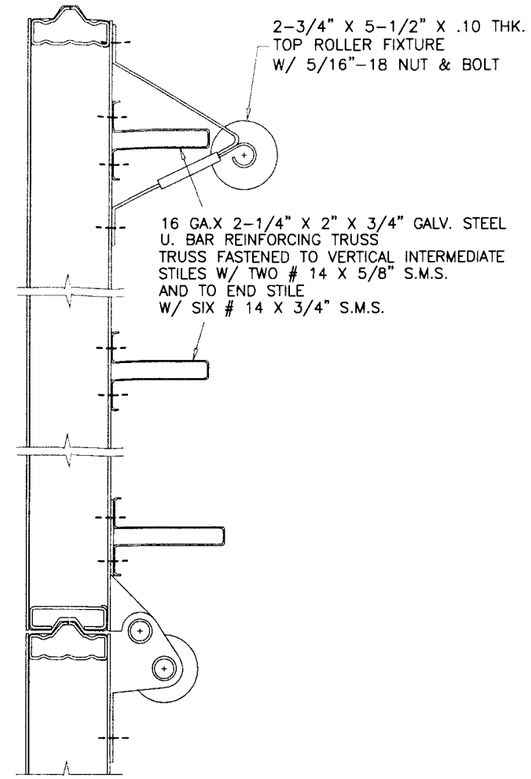

TOP SECTION

REINFORCING

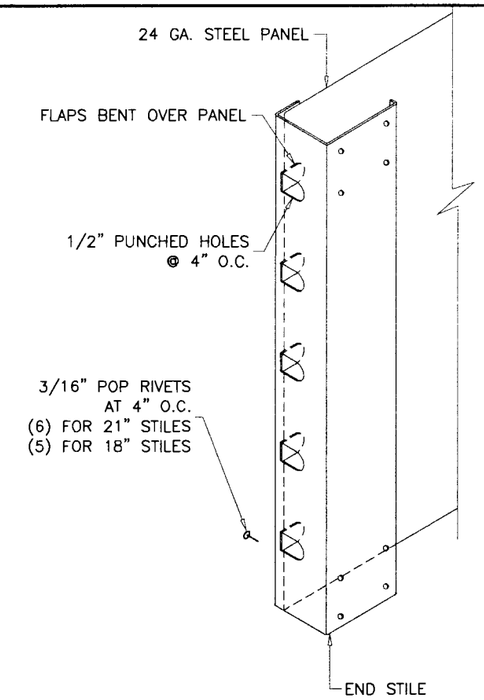

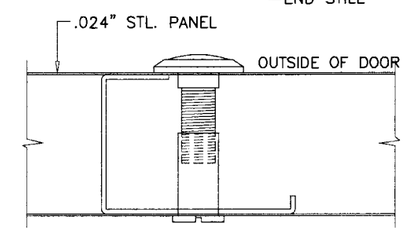

SOLID BRASS DOOR VIEWER

BY 'SCHLAGE SECURITY HARDWARE'
INSTALLED IN 9/16" DIA. HOLES IN CENTER STILE
POSITIONED AT EYE LEVEL

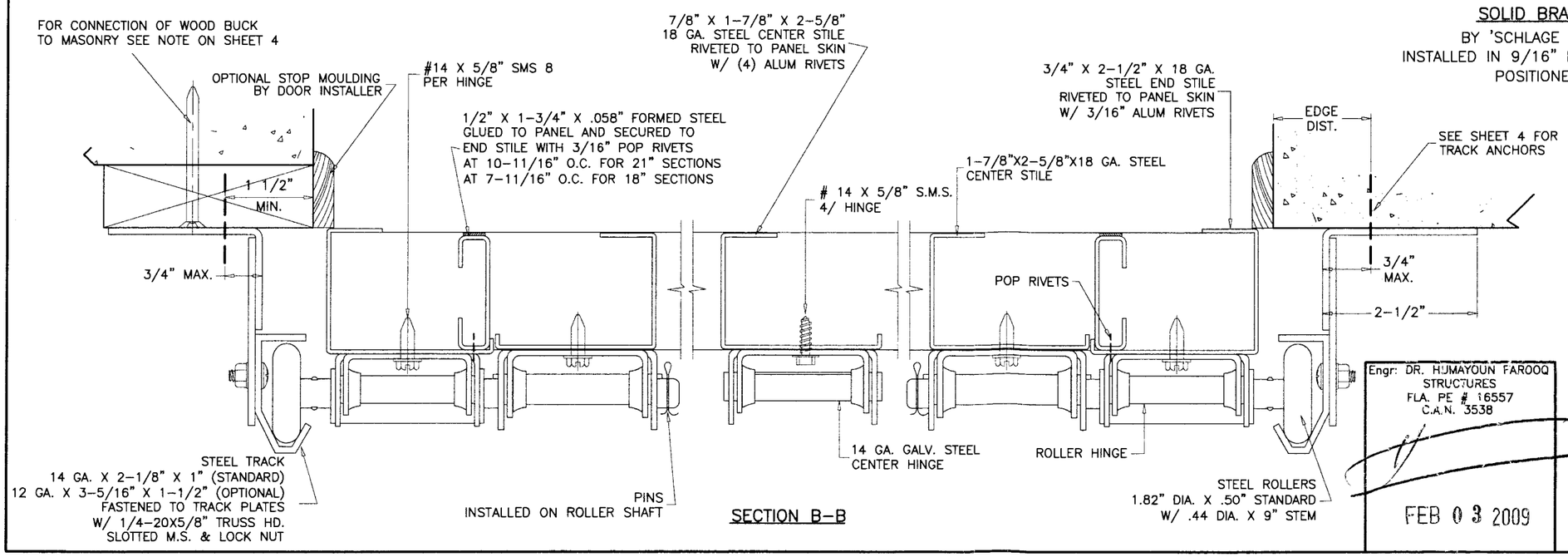

SECTION B-B

Engr: DR. HUMAYOUN FAROOQ
STRUCTURES
FLA. PE # 16557
C.A.N. 3538

FEB 03 2009

PRODUCT REVISED
as complying with the Florida Building Code
Acceptance No 09-0324.07
Expiration Date 03/10/2013
By
Miami Dade Product Control Division

AL-FAROOQ CORPORATION
ENGINEERS & PRODUCT DEVELOPMENT
1235 S.W. 87 AVE
MIAMI, FLORIDA 33174
TEL. (305) 264-8100 FAX. (305) 262-6978

GARAGE\99-24DAB

SECTIONAL GARAGE DOOR

DAB DOORS INC.
12195 N.W. 98 TH. AVE.
HIALEAH GARDENS, FL. 33018
TEL. (305) 556 - 6624

revisions:

no	date	by	description
C	8.11.05	H	ANCHORS REV.
D	02.28.06		REV. PER BCCO COMMENTS
E	03.28.08		GENERAL REVISION
F	01.23.09		GENERAL REVISION

date: 09-22-99
scale: -
dr. by: HAMID
chk. by:

drawing no.
99-24

sheet 2 of 5

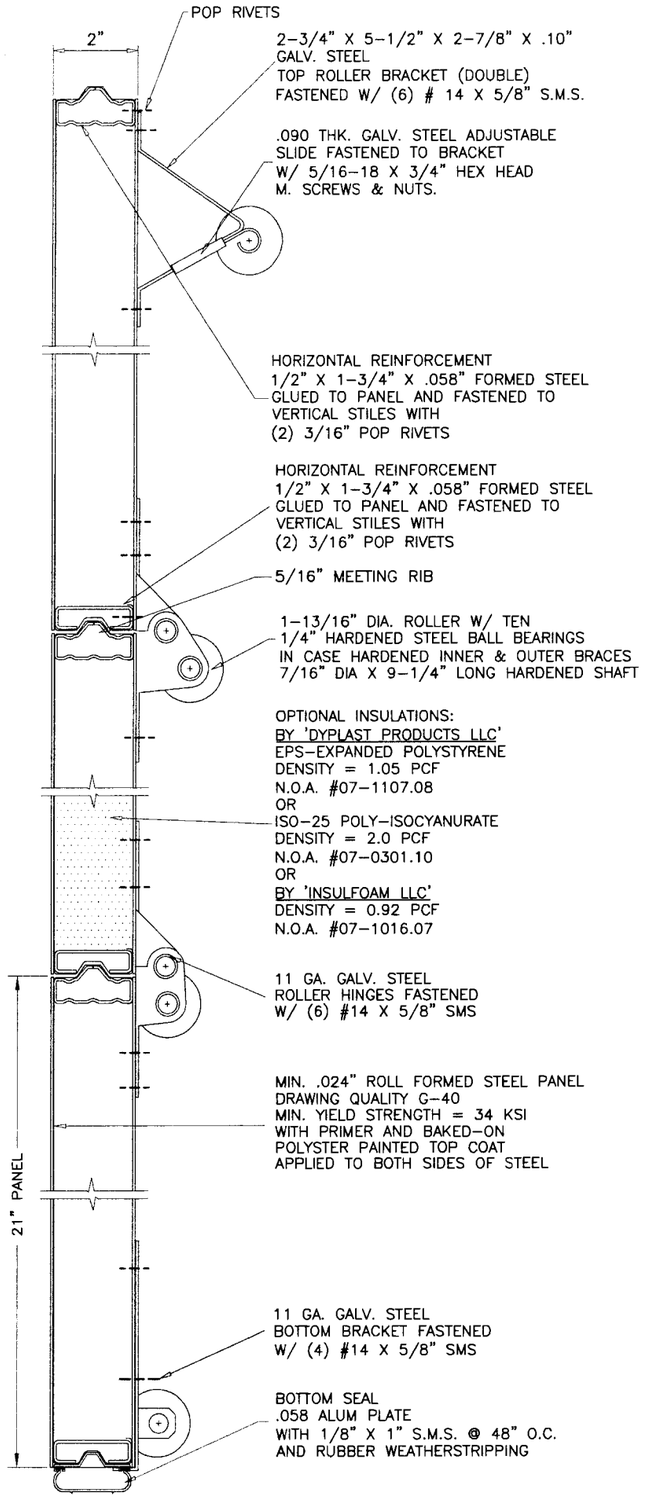

SECTION A-A

SEE SHEET 2 FOR LOCATION OF REINFORCING TRUSSES

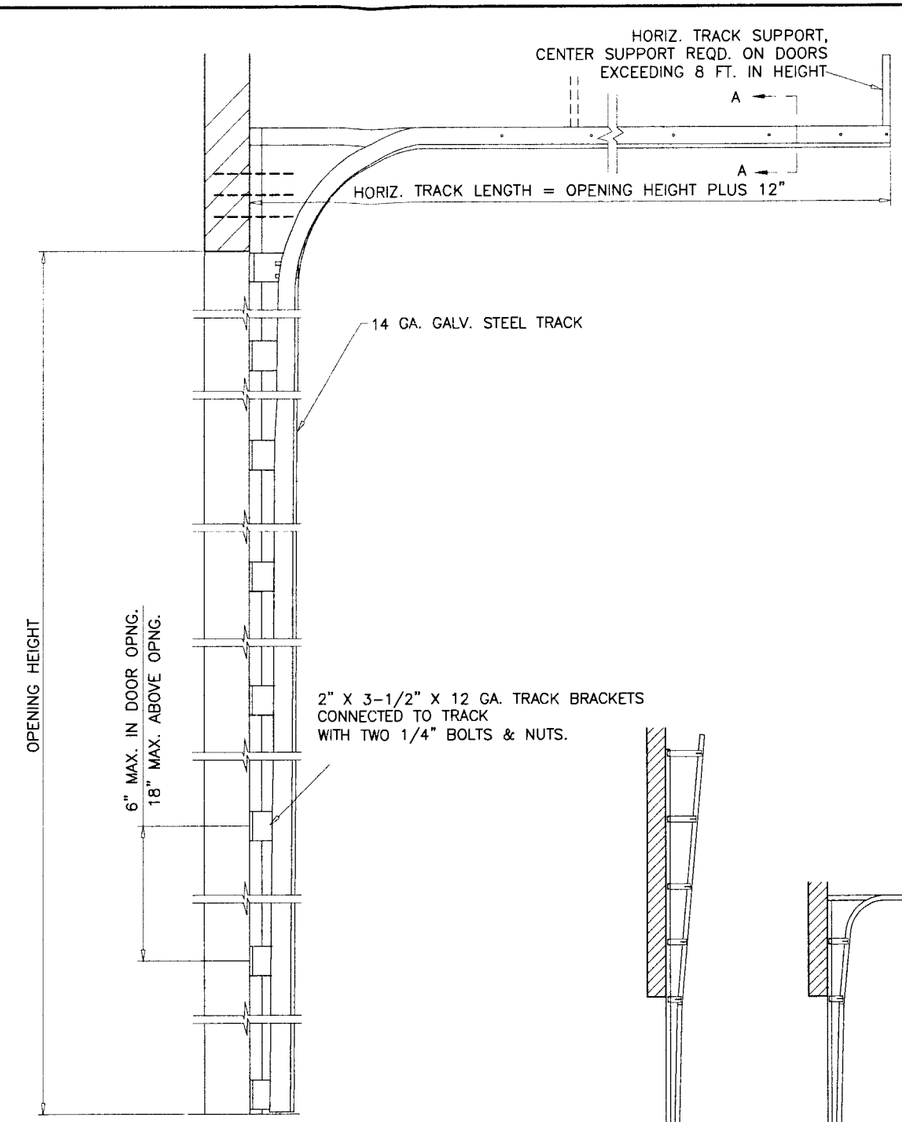

TRACK CONFIGURATION

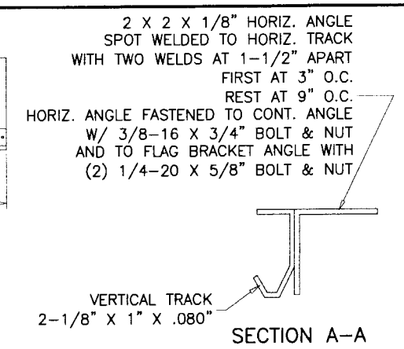

SECTION A-A

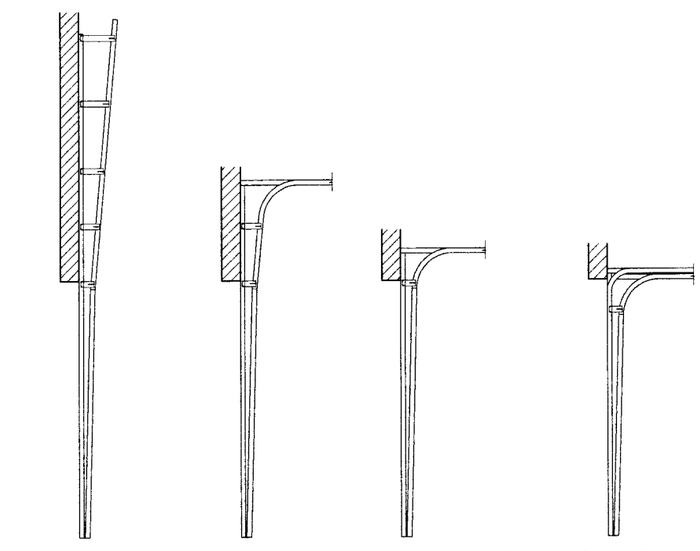

AVAILABLE TRACK OPTIONS

Engr: DR. HUMAYOUN FAROOQ
STRUCTURES
FLA. PE # 16557
C.A.N. 3538

FEB 03 2009

PRODUCT REVISED
as complying with the Florida Building Code
Acceptance No. 09-0324.07
Expiration Date: 03/10/2013
By
Miami Dade Product Control Division

AL-FAROOQ CORPORATION
ENGINEERS & PRODUCT DEVELOPMENT
1235 S.W. 87 AVE
MIAMI, FLORIDA 33174
TEL. (305) 264-8100 FAX. (305) 262-6978

GARAGE\99-24DAB

SECTIONAL GARAGE DOOR

DAB DOORS INC.
12195 N.W. 98 TH. AVE.
HIALEAH GARDENS, FL. 33018
TEL. (305) 556 - 6624

revisions:

no	date	by	description
C	8.11.05	H	ANCHOR SPACING REV.
D	02.28.06		REV. PER BCCO COMMENTS
E	03.28.08		GENERAL REVISION
F	01.23.09		GENERAL REVISION

date: 09-22-99
scale: -
dr. by: HAMID
chk. by:

drawing no.
99-24

sheet 3 of 5

ANCHOR SPACING				
ANCHORS	STRUCTURE	EMBED	SPACING	EDGE DIST.
3/8" HLC SLEEVE BY 'HILTI'	CONC.	1-1/4"	6"	2-1/2"
1/2" HLC SLEEVE BY 'HILTI'	FILLED BLOCK	1-1/2"	8"	4"
3/8" DYNABOLT BY 'ITW'	CONC.	1-1/2"	6"	3-3/4"
1/2" DYNABOLT BY 'ITW'	FILLED BLOCK	1-7/8"	6"	4"
3/8" POWER-BOLT BY 'POWERS'	CONC.	2"	6"	2-1/2"
3/8" SLEEVE-ALL BY 'SIMPSONS'	CONC.	1-1/2"	6"	3"

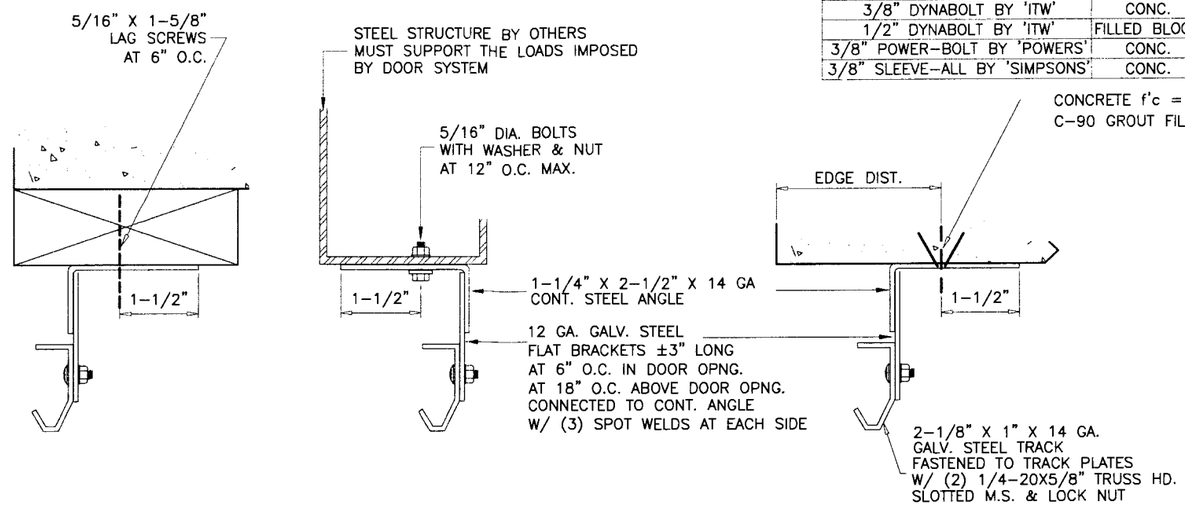

ALTERNATE TRACK INSTALLATION

WOOD FRAME BUILDINGS

STUD WALLS OR DOOR OPENING (NOT BY DAB DOORS) SHALL BE FRAMED SOLID BY NOT LESS THAN (3) 2X6 PRESSURE TREATED GRADE 2 SYP OR BETTER WOOD STUDS.
STUD WALLS TO BE CONT. FROM FOOTING TO TIE BEAM.
ENGINEER OF RECORD TO VERIFY ADEQUACY OF THE SUPPORTING STRUCTURE.

WOOD BUCK CONNECTION TO MASONRY

TRACK SHALL BE SECURED WITH CONT. STEEL ANGLE TO PRESSURE TREATED 2X6 SYP WOOD JAMBS WHICH SHALL BE ANCHORED TO GROUTED REINFORCED MASONRY BLOCK WALL OR CONC. COLUMN WITH

1/4" ULTRACON BY 'ELCO' WITH SPACING OF
7" O.C. INTO BLOCK WALL, WITH 2-1/4" MIN. EMBED
7" O.C. INTO 3000 PSI CONCRETE, WITH 1-3/4" MIN. EMBED
2-1/2" MIN. EDGE DISTANCE

1/4" TAPPER BY 'POWERS' WITH SPACING OF
4" O.C. INTO BLOCK WALL, WITH 1-1/2" MIN. EMBED
5" O.C. INTO 3000 PSI CONCRETE, WITH 1-3/4" MIN. EMBED
3" MIN. EDGE DISTANCE

3/8" CONFLEX BY 'ELCO' OR
3/8" LDT BY 'ITW' WITH SPACING OF
11" O.C. INTO 3000 PSI CONCRETE, WITH 2-1/2" MIN. EMBED
3" MIN. EDGE DISTANCE

3/8" HLC SLEEVE BY 'HILTI' WITH SPACING OF
7" O.C. INTO 3000 PSI CONCRETE, WITH 1-1/4" MIN. EMBED AND
2-1/2" MIN. EDGE DISTANCE

THE BLOCK WALL CELLS SHALL BE GROUT FILLED AND REINFORCED WITH FOUR # 5 BARS EXTENDING INTO FOOTING AND INTO TIE BEAMS ALL BARS SHALL BE CONTINUOUS FROM TIE BEAMS TO FOOTING.

PREPARATION OF JAMBS BY OTHERS

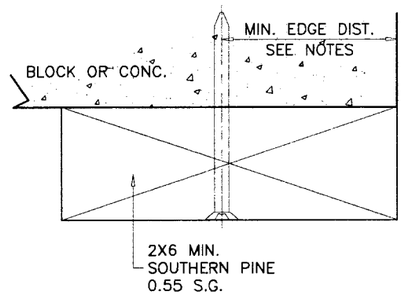

Engr: DR. HUMAYOUN FAROOQ
STRUCTURES
FLA. PE # 16557
C.A.N. 3538

FEB 03 2009

PRODUCT REVISED
as complying with the Florida Building Code
Acceptance No. 09-0324.07
Expiration Date 03/10/2013
By
Miami Dade Product Control Division

AL-FAROOQ CORPORATION
ENGINEERS & PRODUCT DEVELOPMENT
1235 S.W. 87 AVE
MIAMI, FLORIDA 33174
TEL. (305) 264-8100 FAX. (305) 262-6978

GARAGE\99-24DAB

SECTIONAL GARAGE DOOR

DAB DOORS INC.
12195 N.W. 98 TH. AVE.
HIALEAH GARDENS, FL. 33018
TEL. (305) 556 - 6624

revisions:

no	date	by	description
C	8.11.05	H	ANCHOR SPACING REV.
D	02.28.06		REV. PER BCCO COMMENTS
E	03.28.08		GENERAL REVISION
F	01.23.09		GENERAL REVISION

date: 09-22-99
scale: -
dr. by: HAMID
chk. by:

drawing no.
99-24

sheet 4 of 5

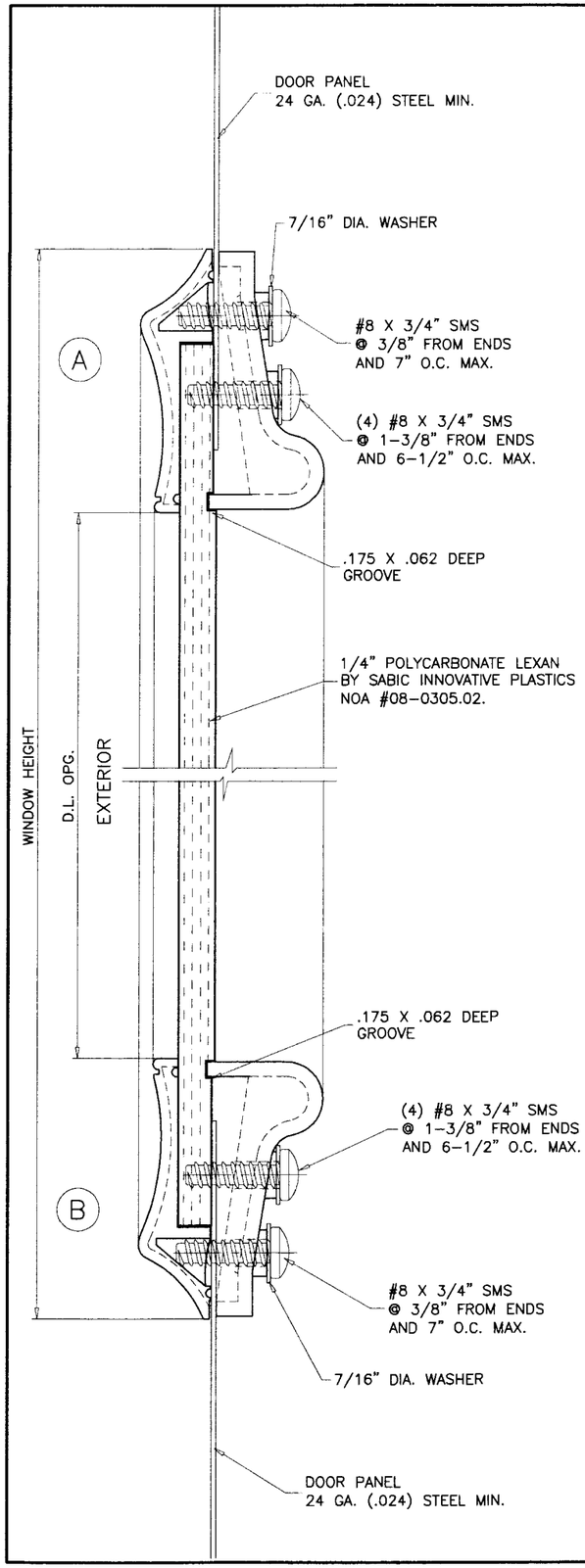

* PLASTIC COMPLIES WITH
SECTION 2612 OF FBC 2007
SEE EVIDENCE PAGE

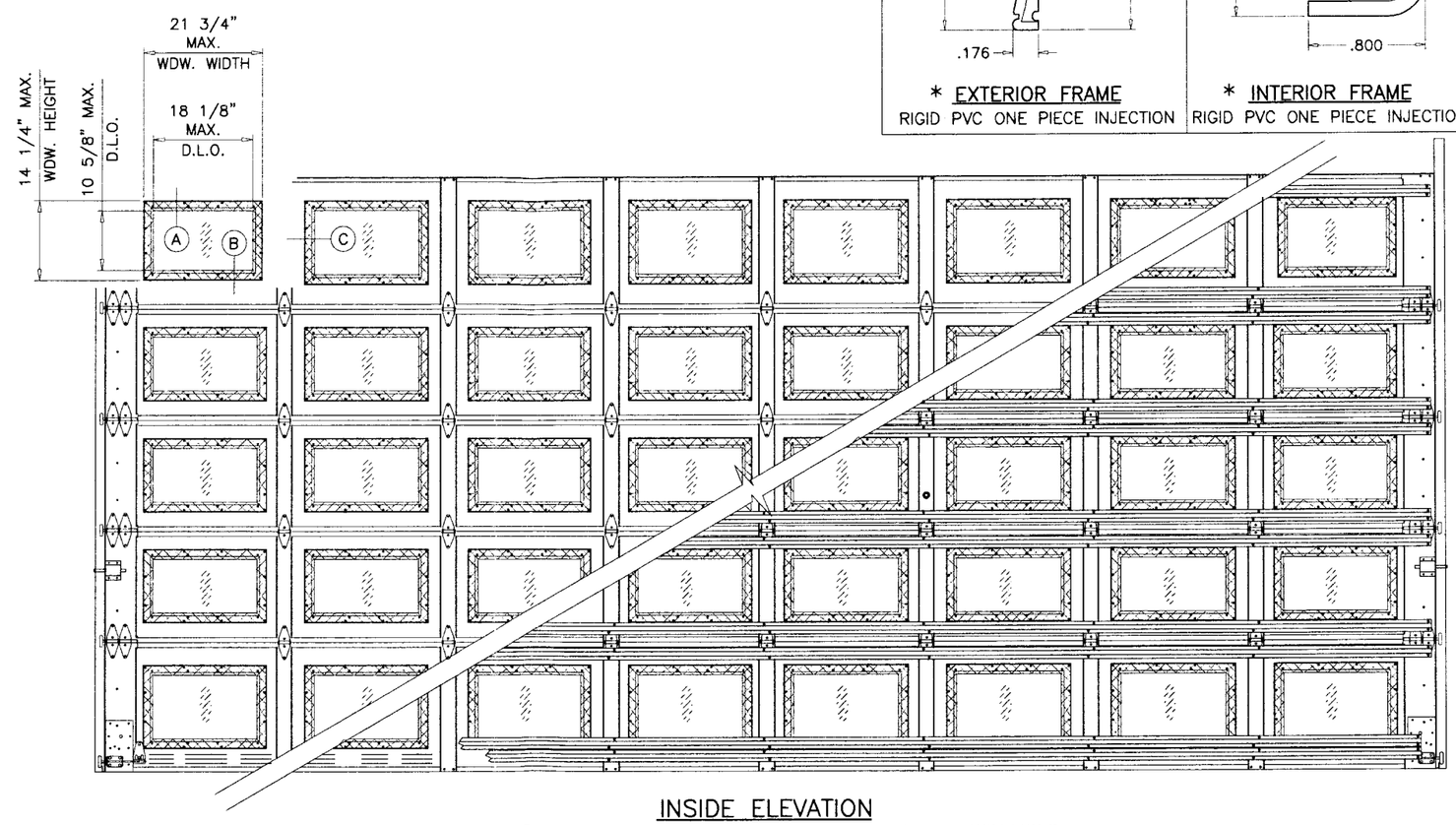

INSIDE ELEVATION
RAISED PANEL EMBOSSED DOOR WITH OPTIONAL WINDOWS

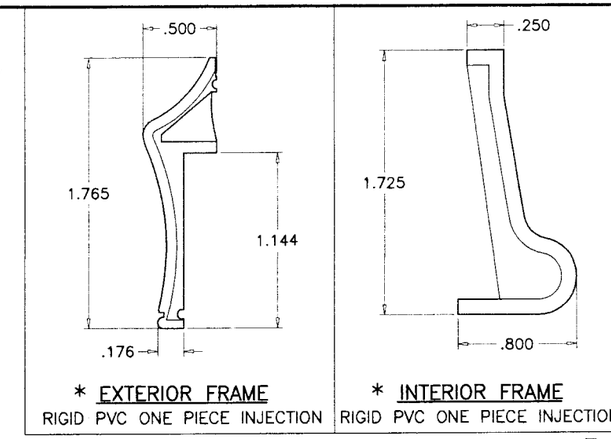

* EXTERIOR FRAME
RIGID PVC ONE PIECE INJECTION

* INTERIOR FRAME
RIGID PVC ONE PIECE INJECTION

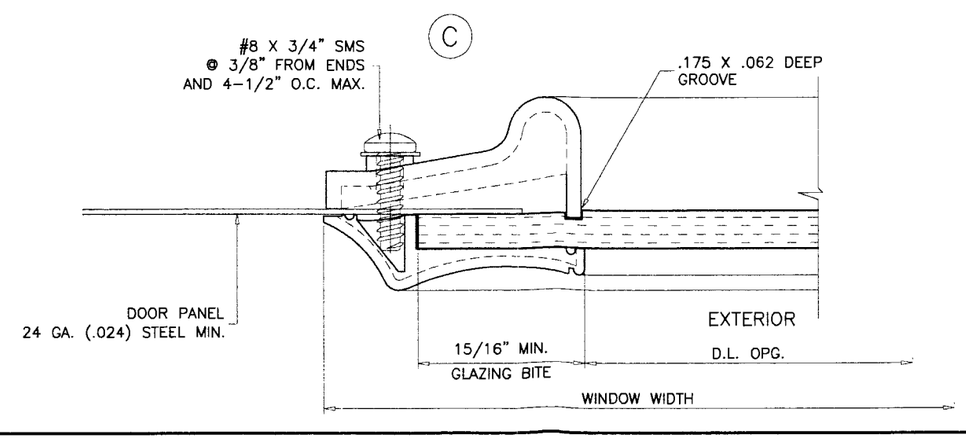

Engr: DR. HUMAYOUN FAROOQ
STRUCTURES
FLA. PE # 16557
C.A.N. 3538

FEB 0 3 2009

PRODUCT REVISED
as complying with the Florida
Building Code
Acceptance No 09-0324.07
Expiration Date 03/10/2013
By
Miami Dade Product Control
Division

AL-FAROOQ CORPORATION
ENGINEERS & PRODUCT DEVELOPMENT
1235 S.W. 87 AVE
MIAMI, FLORIDA 33174
TEL. (305) 264-8100 FAX. (305) 262-6978

GARAGE\99-24DAB

SECTIONAL GARAGE DOOR

DAB DOORS INC.
12195 N.W. 98 TH. AVE.
HIALEAH GARDENS, FL. 33018
TEL. (305) 556 - 6624

revisions:

no	date	by	description
E	03.28.08		GENERAL REVISION
F	01.23.09		GENERAL REVISION

date: 09-22-99
scale: -
dr. by: HAMID
chk. by:

drawing no.
99-24

sheet 5 of 5