MIAMI-DADE COUNTY

BUILDING CODE COMPLIANCE OFFICE (BCCO)
PRODUCT CONTROL DIVISION

MIAMI-DADE COUNTY, FLORIDA
METRO-DADE FLAGLER BUILDING
140 WEST FLAGLER STREET, SUITE 1603
MIAMI, FLORIDA 33130-1563
(305) 375-2901 FAX (305) 375-2908
www.buildingcodeonline.com

# NOTICE OF ACCEPTANCE (NOA)

**Roll-a-way by QMI**
**1661 Glenlake Avenue**
**Itasca, IL 60143**

**SCOPE:**

This NOA is being issued under the applicable rules and regulations governing the use of construction materials. The documentation submitted has been reviewed by Miami-Dade County Product Control Division and accepted by the Board of Rules and Appeals (BORA) to be used in Miami Dade County and other areas where allowed by the Authority Having Jurisdiction (AHJ).

This NOA shall not be valid after the expiration date stated below. The Miami-Dade County Product Control Division (In Miami Dade County) and/or the AHJ (in areas other than Miami Dade County) reserve the right to have this product or material tested for quality assurance purposes. If this product or material fails to perform in the accepted manner, the manufacturer will incur the expense of such testing and the AHJ may immediately revoke, modify, or suspend the use of such product or material within their jurisdiction. BORA reserves the right to revoke this acceptance, if it is determined by Miami-Dade County Product Control Division that this product or material fails to meet the requirements of the applicable building code.

This product is approved as described herein, and has been designed to comply with the Florida Building Code, including the High Velocity Hurricane Zone.

**DESCRIPTION: Extruded Aluminum 40 mm AL2-E Slat Roll Up Shutter**

**APPROVAL DOCUMENT:** Drawing No. **3-01-036**, titled "AL2-E 40 MM SLAT PRODUCT APPROVAL", sheets 1 through 19 of 19, prepared by Roll-a-way by QMI dated 02/28/09 , signed and sealed by Donald A. Fowler, P.E., bearing the Miami-Dade County Product Control Revision stamp with the Notice of Acceptance number and expiration date by the Miami-Dade County Product Control Division.

**MISSILE IMPACT RATING: Large and Small Missile Impact**

**LABELING:** Each unit shall bear a permanent label with the manufacturer's name or logo, city, state and following statement: "Miami-Dade County Product Control Approved", unless otherwise noted herein.

**RENEWAL** of this NOA shall be considered after a renewal application has been filed and there has been no change in the applicable building code negatively affecting the performance of this product.

**TERMINATION** of this NOA will occur after the expiration date or if there has been a revision or change in the materials, use, and/or manufacture of the product or process. Misuse of this NOA as an endorsement of any product, for sales, advertising or any other purposes shall automatically terminate this NOA. Failure to comply with any section of this NOA shall be cause for termination and removal of NOA.

**ADVERTISEMENT:** The NOA number preceded by the words Miami-Dade County, Florida, and followed by the expiration date may be displayed in advertising literature. If any portion of the NOA is displayed, then it shall be done in its entirety.

**INSPECTION:** A copy of this entire NOA shall be provided to the user by the manufacturer or its distributors and shall be available for inspection at the job site at the request of the Building Official.

This NOA **revises NOA # 05-0623.06** and, consists of this page 1 and evidence page E-1 and E-2, as well as approval document mentioned above.

The submitted documentation was reviewed by **Mohammed Iqbal Shaikh, P.E.**

MIAMI-DADE COUNTY APPROVED 05/19/09

**Roll-a-way by QMI**

## NOTICE OF ACCEPTANCE: EVIDENCE SUBMITTED

### A. DRAWINGS

1. Manufacturer's parts and sections drawings.
2. Drawing No. **3-01-036**, titled "AL2-E 40 MM SLAT PRODUCT APPROVAL", sheets 1 through 19 of 19, prepared by Roll-a-way by QMI dated 02/28/09, signed and sealed by Donald A. Fowler, P.E.,

### B. TESTS

1. Test report on Large Missile Impact Test per TAS-201-94, Cyclic Wind Pressure Test per PA 203-94 and Uniform Static Air Pressure Test per TAS-202-94 of 40 of Aluminum Roll-Up Shutter prepared by Fenestration Testing Laboratory Inc, report No. **2697**, dated 07/31/00, signed and sealed by A. P. Gonzalez, P.E. ***"Submitted under NOA# 02-0726.03"***
2. Test report on Uniform Static Air Pressure Test per TAS-202, of 40 mm. Aluminum Roll Up Shutter System, prepared by Fenestration Testing Laboratory, Inc., report No. **2754**, dated 08/18/00, signed and sealed by A. P. Gonzalez, P.E. ***"Submitted under NOA# 02-0726.03"***
3. Test report on Large Missile Impact Test per TAS-201, of Aluminum Mullions and Aluminum Storm Bars, prepared by Fenestration Testing Laboratory, Inc, report No. **2699**, dated 08/18/00, signed and sealed by A. P. Gonzalez, P.E. ***"Submitted under NOA# 02-0726.03"***
4. Test report on Cyclic Wind Pressure Test per TAS-203, of 40 mm Aluminum Roll Up Shutter System, prepared by Fenestration Testing Laboratory, Inc, report No. **2754**, dated 08/25/00, signed and sealed by A. P. Gonzalez, P.E. ***"Submitted under NOA# 02-0726.03"***

### C. CALCULATIONS

1. Revised Anchor Calculations and structural; analysis, prepared by Tilteco Inc., dated 05/27/05, singed and sealed Walter A. Tillit Jr. , P. E. ***"Submitted under NOA# 05-0623.06"***
2. Anchor Calculations and structural; analysis, prepared by Roll-a-way by QMI, dated 03/20/09, singed and sealed by Donald A. Fowler, P.E

### D. QUALITY ASSURANCE

1. Miami Dade Building Code Compliance Office (BCCO).

### E. MATERIAL CERTIFICATIONS

1. Tensile Test of Flat Reduced Section, prepared by ATC Associates, Report No. 13974.0001, dated 08/22/00, signed and sealed by S. E. Black, P.E. ***"Submitted under NOA# 02-0726.03"***

**Mohammed Iqbal Shaikh, P.E.**
**Sr. Building Code Compliance Specialist**
**NOA No. 09-0331.09**
**Expiration Date: November 8, 2011**
**Approval Date: June 10, 2009**

**Roll-a-way by QMI**

## NOTICE OF ACCEPTANCE: EVIDENCE SUBMITTED

### F. STATEMENTS

1. Letters of 2007 compliance and no financial interest, issued by Roll-a-way by QMI, on 03/20/09, signed and sealed by Donald A. Fowler, P.E

### G. OTHER

1. Notice of Acceptance No. **05-0623.06**,

**Mohammed Iqbal Shaikh, P.E.**
**Sr. Building Code Compliance Specialist**
**NOA No. 09-0331.09**
**Expiration Date: November 8, 2011**
**Approval Date: June 10, 2009**

# HURRICANE ROLL SHUTTER
# HIGH VELOCITY HURRICANE ZONE
# PRODUCT APPROVAL

GENERAL NOTES:

1. THE COMPONENTS & CLADDING DESIGNS, INCLUDED HEREIN ARE FLORIDA BUILDING CODE (FBC) 2007 EDITION AND 2009 SUPPLEMENT, COMPLIANT.
2. DESIGN CRITERIA FOR ALUMINUM, MINIMUM MECHANICAL PROPERTIES, AND SAFETY FACTORS ARE IN ACCORDANCE WITH THE "ALUMINUM DESIGN MANUAL" PER FBC REFERENCE.
3. ALUMINUM ALLOYS: ALL EXTRUSIONS SHALL BE ALLOY AS NOTED.
4. STEEL SURFACES TO BE PLACED IN CONTACT WITH ALUMINUM SHALL BE GIVEN ONE COAT OF ZINC CHROMATE PRIMER IN ACCORDANCE WITH FEDERAL SPEC. NO. TTP-645, OR BE GALVANIZED.
5. ANCHORS SHALL BE AS LISTED, AND SPACED AS SHOWN ON DETAILS. ANCHOR EMBEDMENT TO BASE MATERIAL SHALL BE BEYOND WALL DRESSING OR STUCCO.
6. ALL BOLTS, NUTS, AND WASHERS SHALL BE STAINLESS STEEL OR ALUMINUM ALLOY 2024-T4 OR 7075-T6, OR PLATED STEEL.
7. ELECTRICAL CERTIFICATION # 30648 PER APPLIED RESEARCH LABORATORY UNDER SPECIFICATION ANSI/UL 325.
8. DESIGN CRITERIA: FOR MULTIPLE SPANS, THE COMBINED MAX DEFLECTION OF HEADER & STORM BARS IS 2". FOR MULLIONS MAX DEFLECTION < L/180.
9. ANCHORING OR LOADING CONDITIONS OTHER THAN THOSE SHOWN IN THESE DETAILS ARE NOT PART OF THIS APPROVAL.
10. ALTERATIONS OR ADDITIONS TO THE DOCUMENT ARE NOT PERMITTED. DOCUMENT SHALL BEAR THE ORIGINAL SEAL, SIGNATURE (IN RED), AND DATE OF THE PROFESSIONAL ENGINEER LISTED.
11. THIS PRODUCT APPROVAL DOCUMENT IS SUITABLE FOR USE ONLY AS SPECIFICALLY STATED ON THE COMBINED PAGES OF THE ENTIRE DOCUMENT. ANY DEVIATIONS SHALL BE REVIEWED AND APPROVED SEPARATELY.

DESIGN LOADS SHALL BE CALCULATED AS PER REQUIREMENTS OF ASCE 7-05 & FBC EXCEPTIONS.

**PRODUCT MARKING**

A LABEL SHALL BE AFFIXED ON UNIT AT RIGHT BOTTOM OF BOX, BOTTOM BAR, OR RAIL FACE WITH THE FOLLOWING STATEMENT:

"ROLL-A-WAY BY QMI, ST. PETERSBURG, FL.
DADE COUNTY PRODUCT CONTROL APPROVED
NOA - CURRENT NUMBER,
TESTED PER TAS 201, TAS 202, AND TAS 203"

## SLAT PERFORMANCE CHART

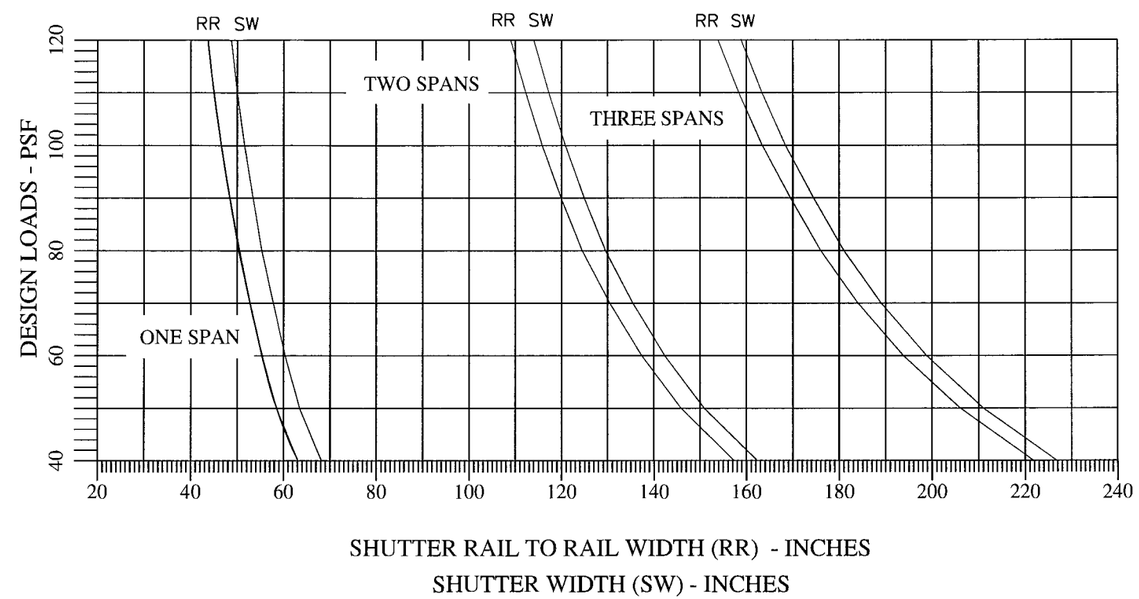


PRODUCT [illegible] as complying [illegible] Building Code [illegible] Accepted for [illegible] 09-0331.09 Expiration Date 11/8/11 By [illegible] Miami Dade Product Control Division

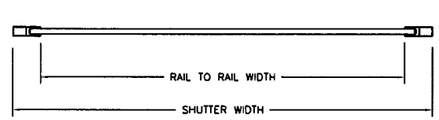


ONE SPAN

PLAN VIEW

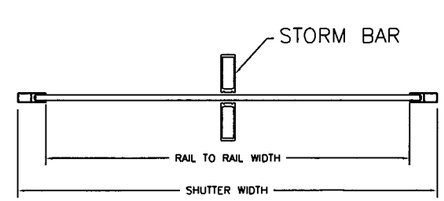


TWO SPANS

PLAN VIEW

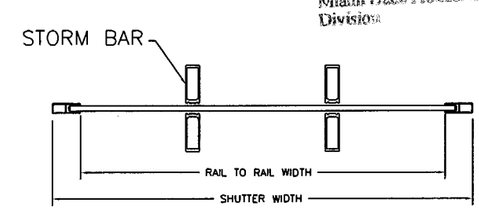


THREE SPANS

PLAN VIEW

Roll-a-way™ THE ORIGINAL


ROLL-A-WAY BY QMI
1661 GLENLAKE AVENUE
ITASCA, IL 60143


COPYRIGHT © 2008
QUALITAS MAUNFACTURING INC.


DRAWING TITLE:

AL2-E 40MM SLAT
PRODUCT APPROVAL


D.L. Fowler
Professional Engineer
Florida License No.
PE0060458


3-24-09

| | |
|---|---|
| DRAWN: | DF |
| DATE: | 01-29-09 |
| APPROVED: | DF |
| DATE: | 2-28-09 |
| DRAWING NO: | 3-01-036 |
| SIZE: B | REV: - |
| SCALE: | 3/4" = 1'-0" |
| SHEET: | 1 OF 19 |

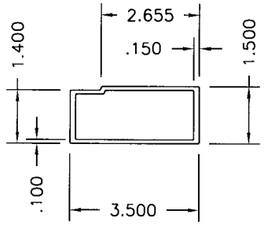


HEADER TUBE TYPE "1"
ALUMINUM 6005-T5

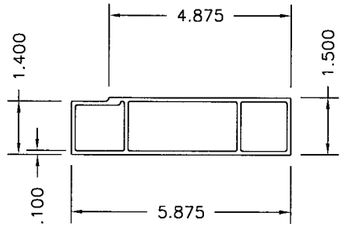


HEADER TUBE TYPE "2"
ALUMINUM 6005-T5

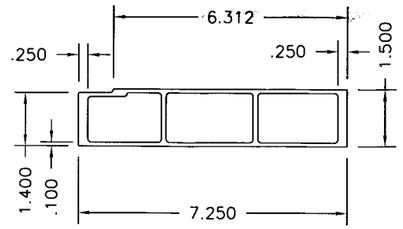


HEADER TUBE TYPE "3"
ALUMINUM 6005-T5

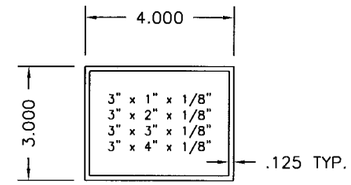


BUILT-OUT TUBES
ALUMINUM 6005-T5 & 6063-T6

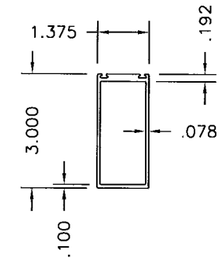


3" STORM BAR
ALUMINUM 6005-T5

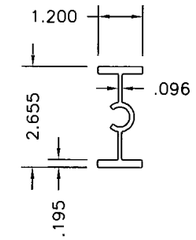


3" STORM BAR INSERT
ALUMINUM 6005-T5

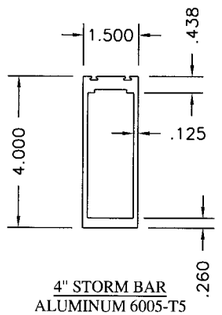


4" STORM BAR
ALUMINUM 6005-T5

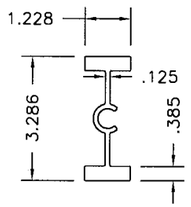


4" STORM BAR INSERT
ALUMINUM 6005-T5

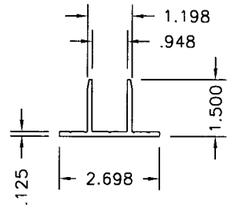


3" STORM BAR BRACKET
ALUMINUM 6005-T5

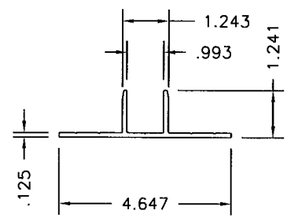


4" STORM BAR BRACKET
ALUMINUM 6005-T5

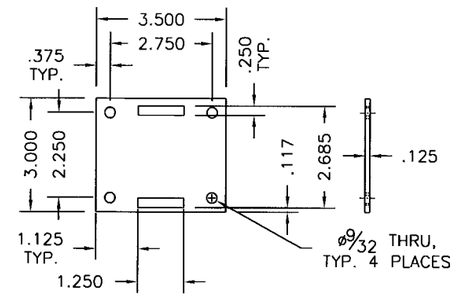


3" REMOVABLE STORM BAR BASE
ALUMINUM 6061-T6

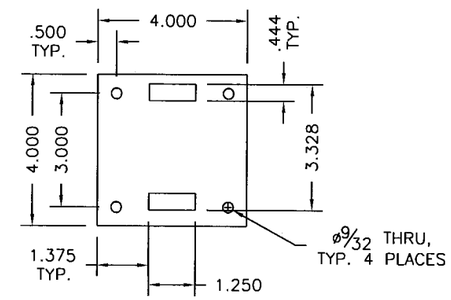


4" REMOVABLE STORM BAR BASE
ALUMINUM 6061-T6

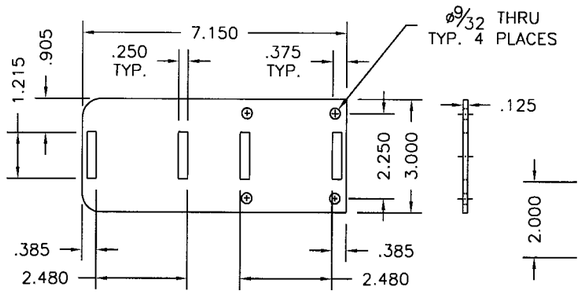


3" REMOVABLE STORM BAR BASE, EXTENDED
ALUMINUM 6061-T6 OR 6005-T5

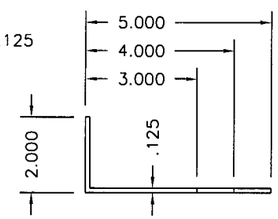


ALUMINUM ANGLE
ALUMINUM 6063-T5

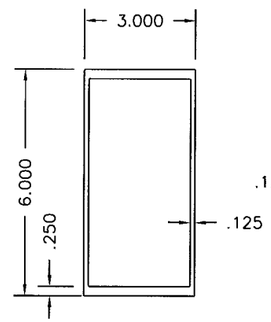


3" x 6" MULLION
ALUMINUM 6005-T5

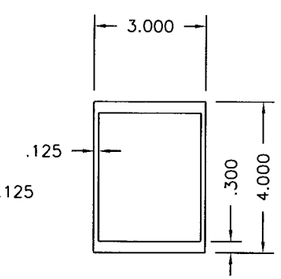


3" x 4" MULLION
ALUMINUM 6005-T5

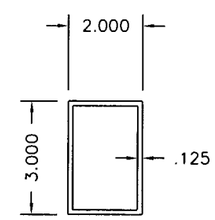


2" x 3" MULLION
ALUMINUM 6005-T5

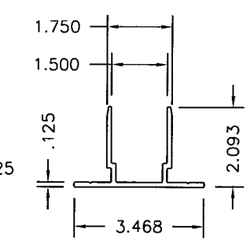


2" MULLION BRACKET
ALUMINUM 6005-T5

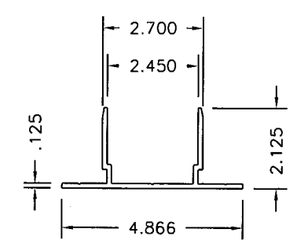


3" MULLION BRACKET
ALUMINUM 6005-T5

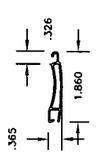


AL2 EXTRUDED ALUMINUM SLAT
ALUMINUM 6005-T5

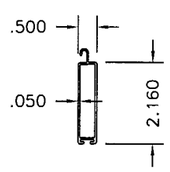


EXTRUDED ALUMINUM
BOTTOM SLAT
ALUMINUM 6063-T6

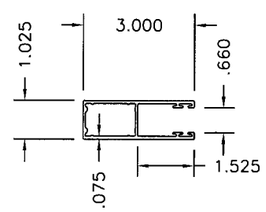


SYSTEM I TRACK
ALUMINUM 6063-T6

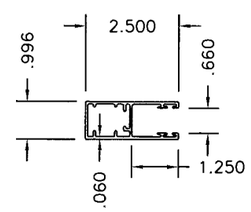


SYSTEM II TRACK
ALUMINUM 6063-T6

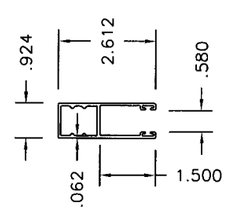


TYPE 1 TRACK
ALUMINUM 6063-T6

PROCESSED
Approved by the Florida
Department of
09-0331-09
11/09/11
By
Mobile Home Product Control
Division

# ROLL-A-WAY BY QMI

1661 GLENLAKE AVENUE
ITASCA, IL 60143

COPYRIGHT © 2008
QMI

DRAWING TITLE:

## AL2-E 40MM SLAT PRODUCT APPROVAL

D.L. Fowler
Professional Engineer
Florida License No.
PE0050458

3-24-09

| | |
|---|---|
| DRAWN: | DF |
| DATE: | 01-29-09 |
| APPROVED: | DF |
| DATE: | 07-28-09 |
| DRAWING NO: | 3-01-036 |
| SIZE: B | REV: |
| SCALE: | 3" = 1'-0" |
| SHEET: | 2 OF 19 |

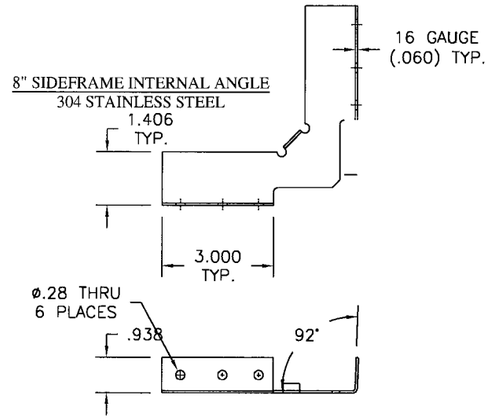


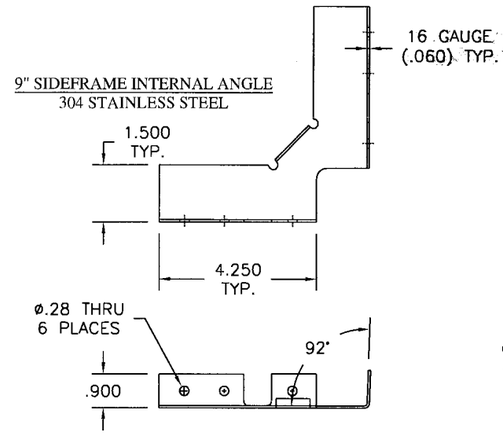


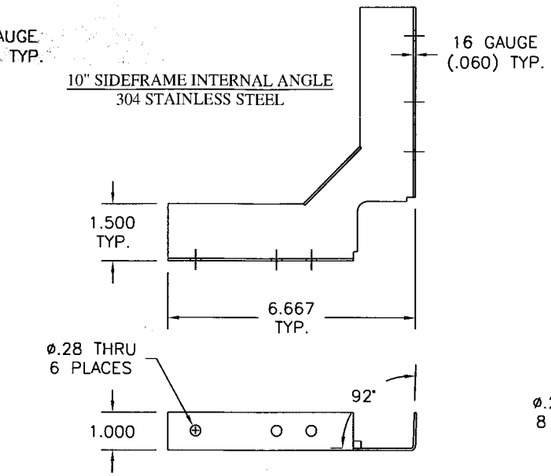


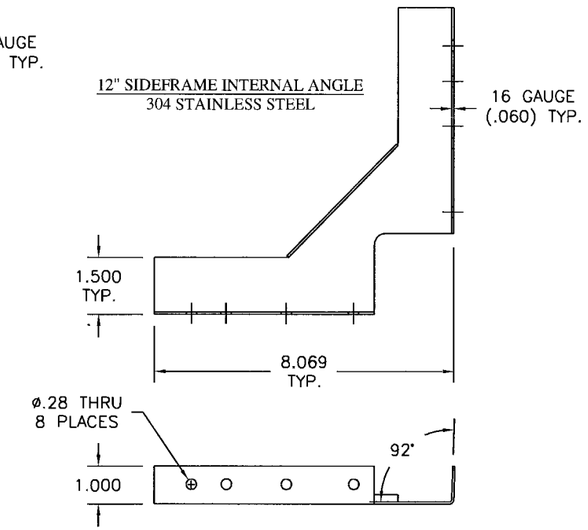


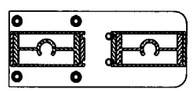

3" SPRING-LOADED STORM BAR
TO BUILD-OUT TUBE

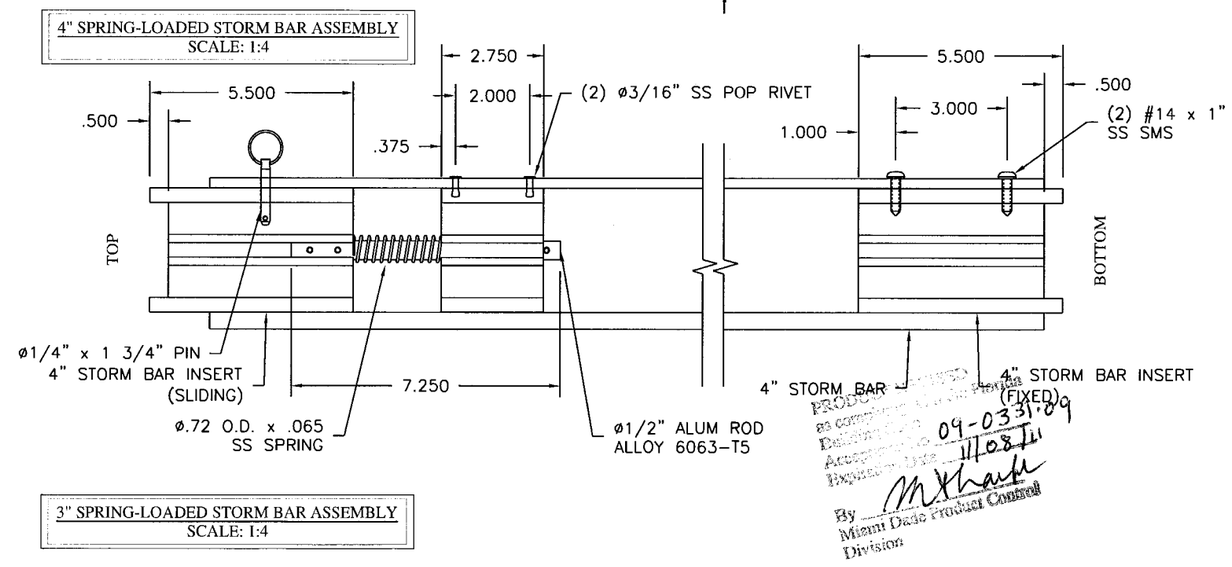


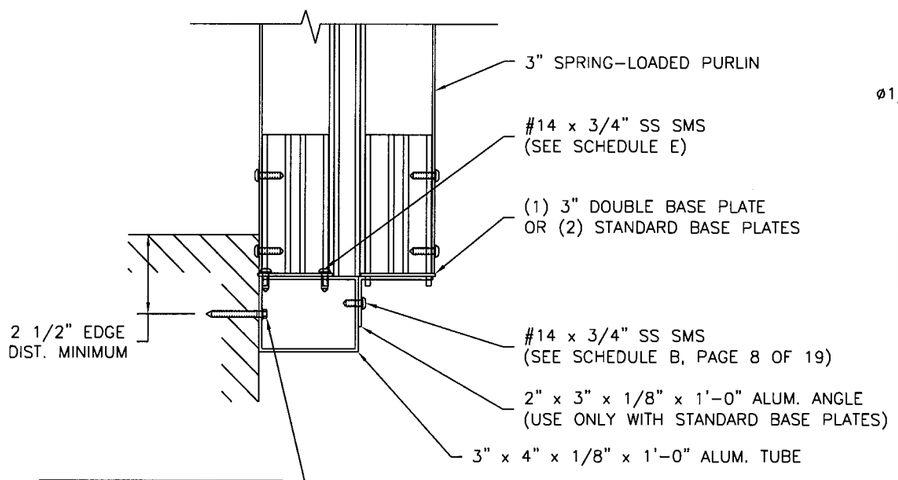


STORM BAR CONNECTION
TO BUILD-OUT TUBE

Ⓐ ANCHOR
MINIMUM (4) 1/4" TAPCONS @ 2 1/2" O.C. FOR
A MAXIMUM TENSION IN CONCRETE OF 966 LBS.

Ⓐ ANCHOR
MINIMUM (6) 1/4" TAPCONS @ 2 1/2" O.C. FOR A
MAXIMUM TENSION IN CONCRETE BLOCKS OF 655 LBS.

Ⓔ ANCHOR
MINIMUM (4) 1/4" LAG SCREWS @ 2" O.C. FOR A
MAXIMUM TENSION IN WOOD 600 LBS.

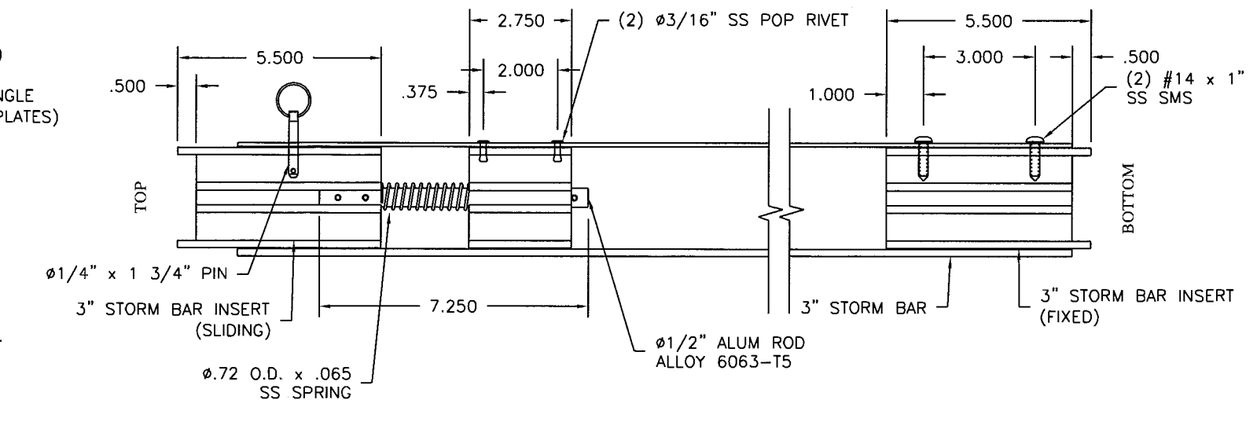


PRODUCT APPROVAL
as corrected
Date 09-033.09
Accepted 11/08
Expires
By M Thah
Miami Dade Product Control
Division

ROLL-A-WAY BY QMI
1661 GLENLAKE AVENUE
ITASCA, IL 60143
COPYRIGHT © 2008
QMI

DRAWING TITLE:
AL2-E 40MM SLAT
PRODUCT APPROVAL

D.L. Fowler
Professional Engineer
Florida License No.
PE0050458
2-24-09

| | |
|---|---|
| DRAWN: | DF |
| DATE: | 01-29-09 |
| APPROVED: | DF |
| DATE: | 02-28-09 |
| DRAWING NO: | 3-01-036 |
| SIZE: B | REV: |
| SCALE: | 1" = 6" |
| SHEET: | 3 OF 19 |

## 3" SPRING-LOADED STORM BAR ASSEMBLY DETAIL

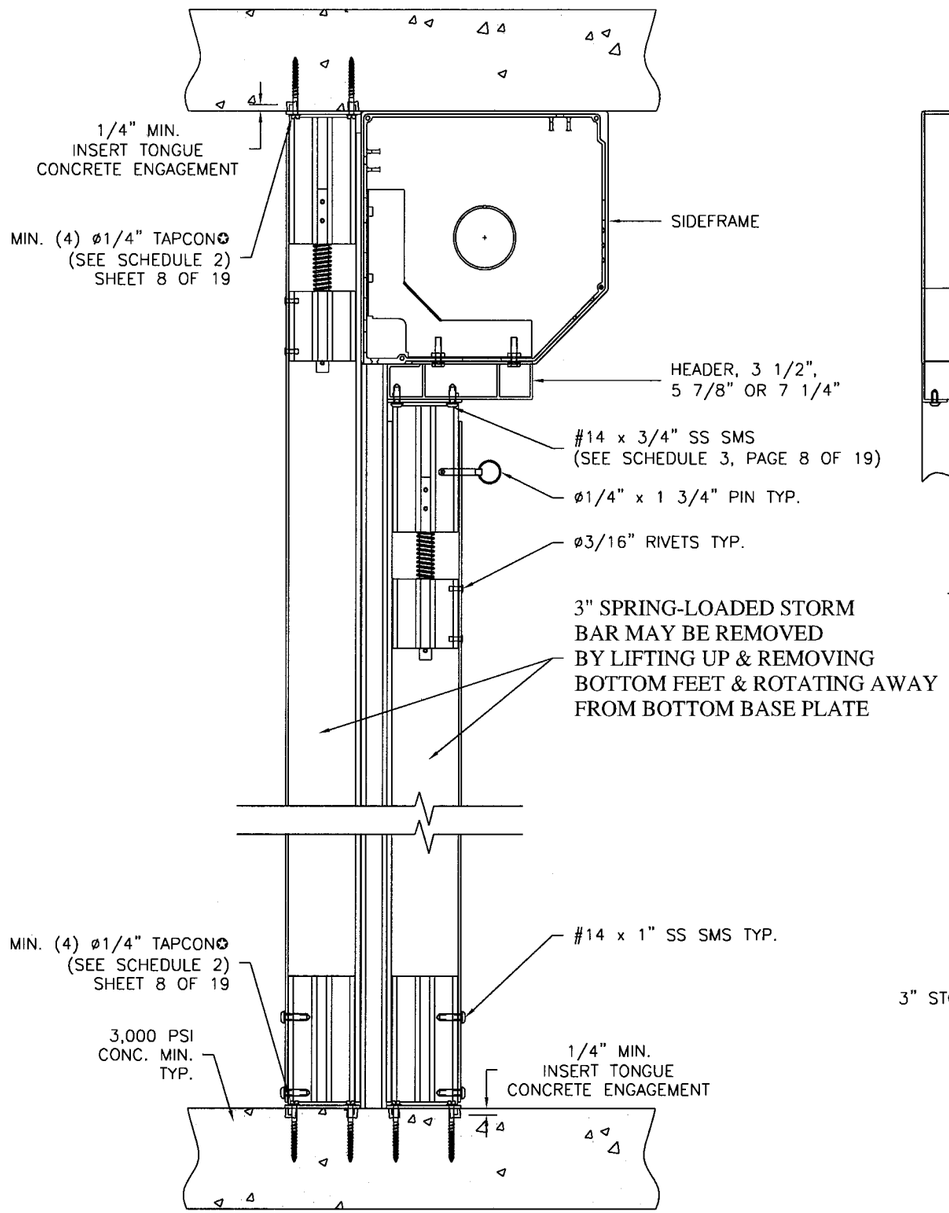


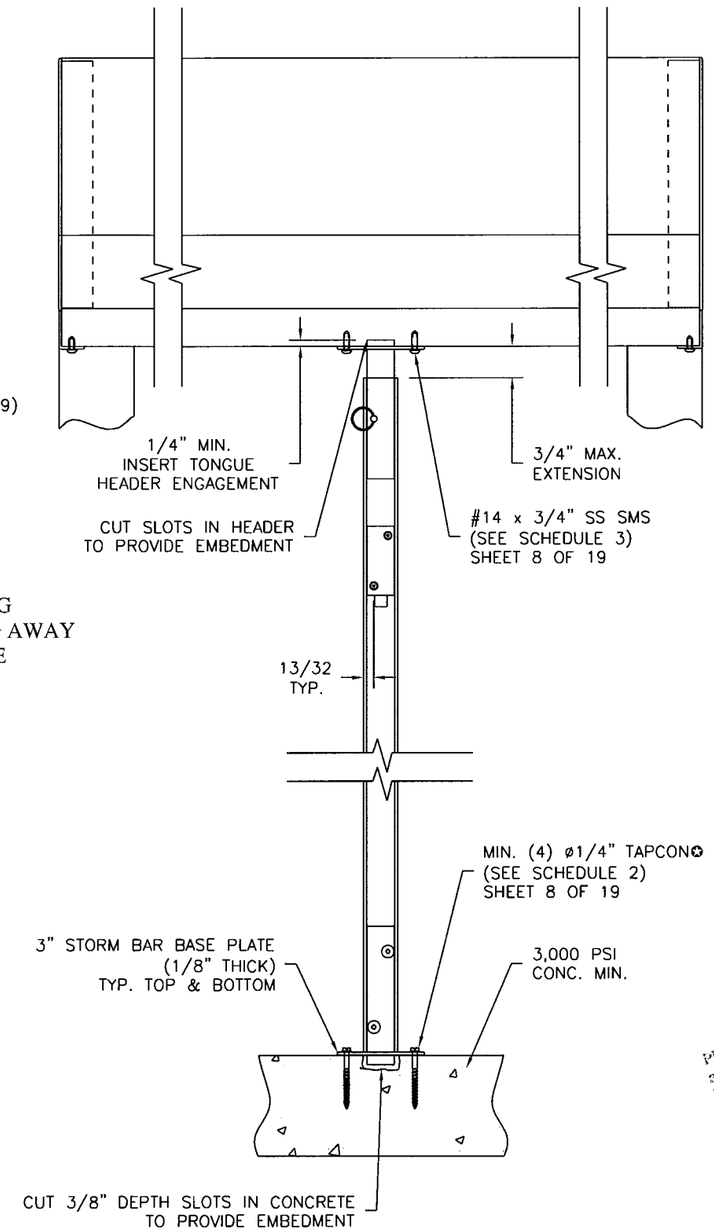


NOTES:
1. SEE PAGES 16 THRU 19 FOR ALLOWABLE SPANS.
2. ADHESIVE WARNING LABELS SHALL BE PLACED ON THE BOTTOM SIDE OF HEADER WITHIN 6" OF STORM BAR.

✪ (4) TAPCONS AS ANCHORS ARE LIMITED TO A SHEAR REACTION OF 1932 LBS..

PRODUCT APPROVAL
as complying with the Miami-Dade
Building Code
Acceptance No. 09-0331.09
Expiration Date 11.08.11
By Miami Dade Product Control Division

ROLL-A-WAY BY QMI
1661 GLENLAKE
ITASCA, IL 60143
COPYRIGHT © 2008
QMI

DRAWING TITLE:
AL2-E 40MM SLAT
PRODUCT APPROVAL

D.L. Fowler
Professional Engineer
Florida License No.
PE0050458
3-24-09

| | |
|---|---|
| DRAWN: | DF |
| DATE: | 01-29-09 |
| APPROVED: | DF |
| DATE: | 07-28-09 |
| DRAWING NO: | 3-01-036 |
| SIZE: B | REV: |
| SCALE: | 1" = 6" |
| SHEET: | 4 OF 19 |

## 4" SPRING-LOADED STORM BAR ASSEMBLY DETAIL

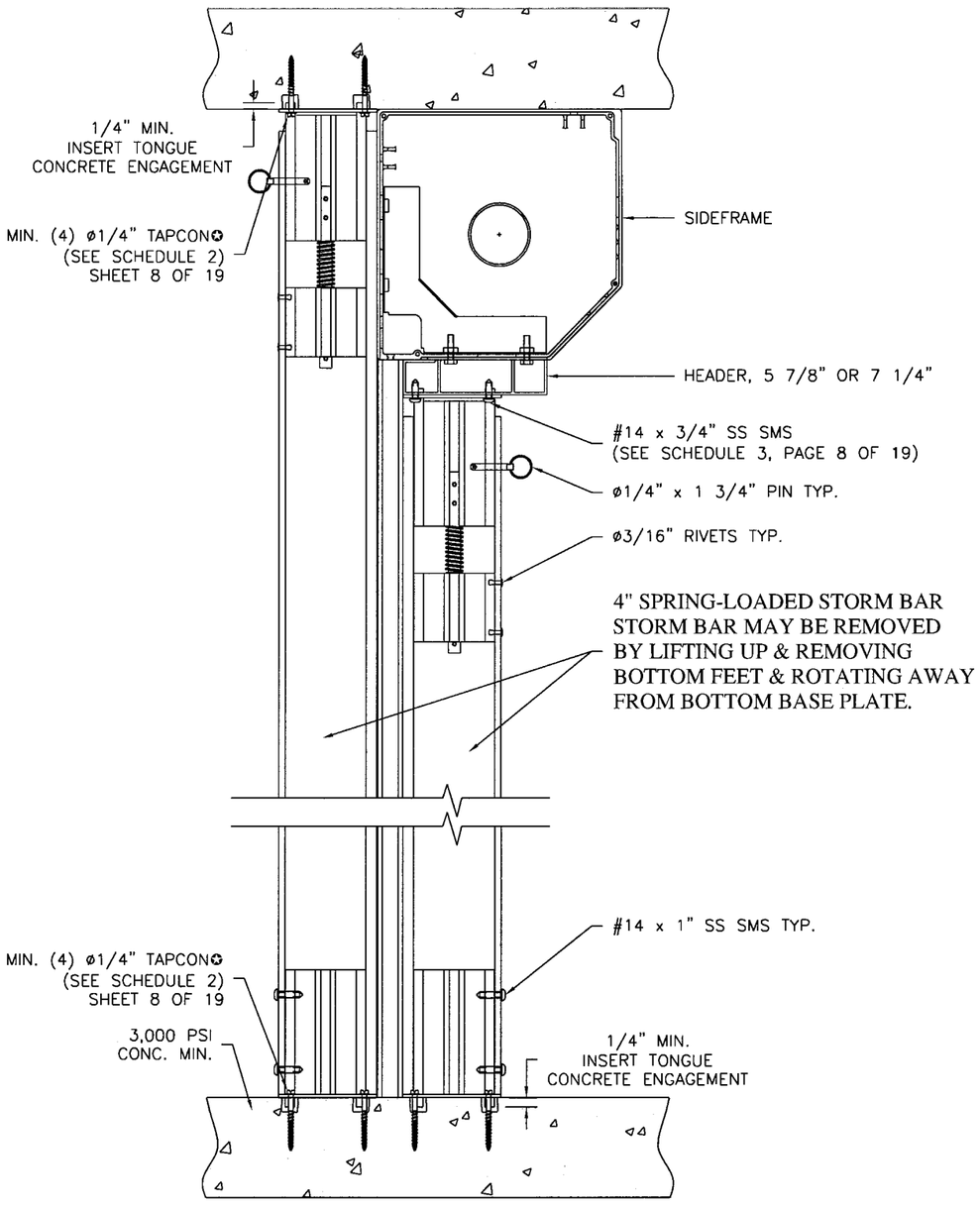


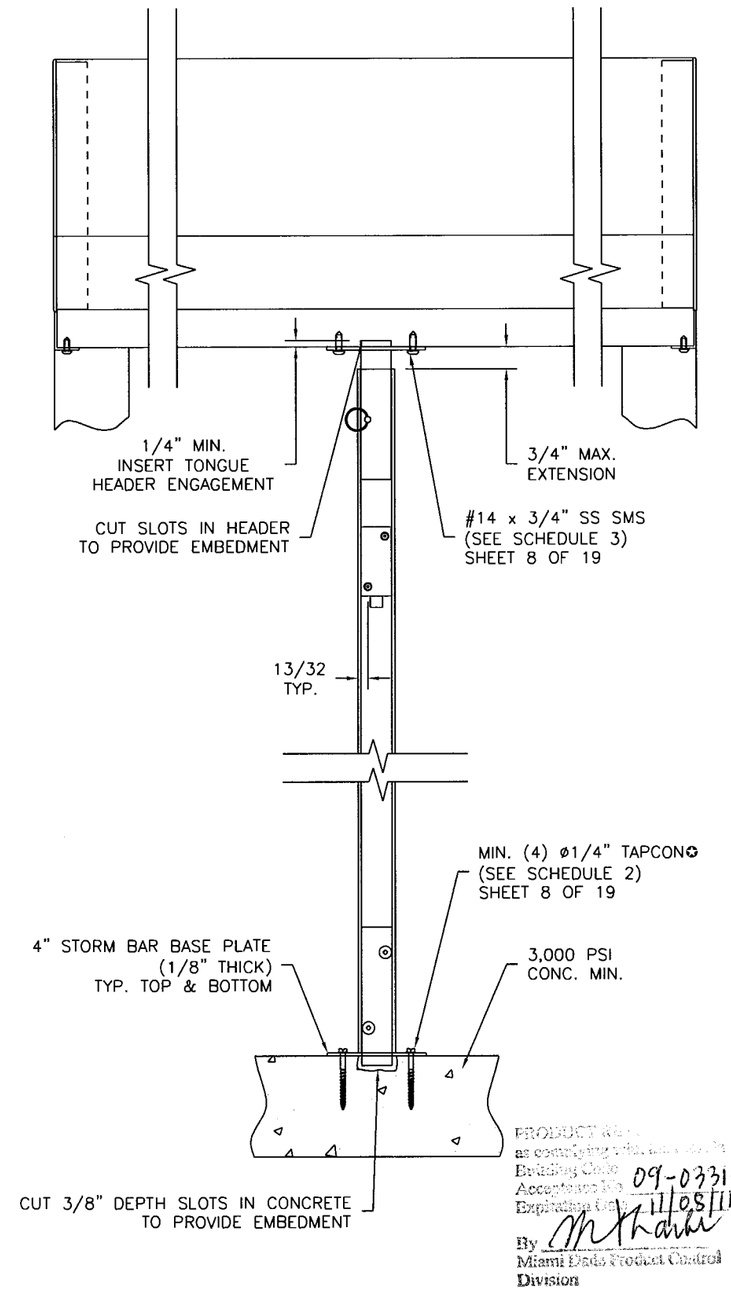


NOTES:
1. SEE PAGES 16 THRU 19 FOR ALLOWABLE SPANS.
2. ADHESIVE WARNING LABELS SHALL BE PLACED ON THE BOTTOM SIDE OF HEADER WITHIN 6" OF STORM BAR.

✪ (4) TAPCONS AS ANCHORS ARE LIMITED TO A SHEAR REACTION OF 1932 LBS..

PRODUCT APPROVAL
as complying with Miami-Dade County
Building Code
Acceptance No. 09-0331.09
Expiration Date 11/05/11
By
Miami Dade Product Control
Division


ROLL-A-WAY BY QMI
1661 GLENLAKE AVENUE
ITASCA, IL 60143


COPYRIGHT © 2008
QMI


DRAWING TITLE:
AL2-E 40MM SLAT
PRODUCT APPROVAL


D.L. Fowler
Professional Engineer
Florida License No.
PE0050458

5-24-09

| | |
|---|---|
| DRAWN: | DLF |
| DATE: | 07-07-09 |
| APPROVED: | DF |
| DATE: | 07-28-09 |
| DRAWING NO: | 3-01-036 |
| SIZE: B | REV: |
| SCALE: | 1" = 6" |
| SHEET: | 5 OF 19 |

WALL MOUNTS

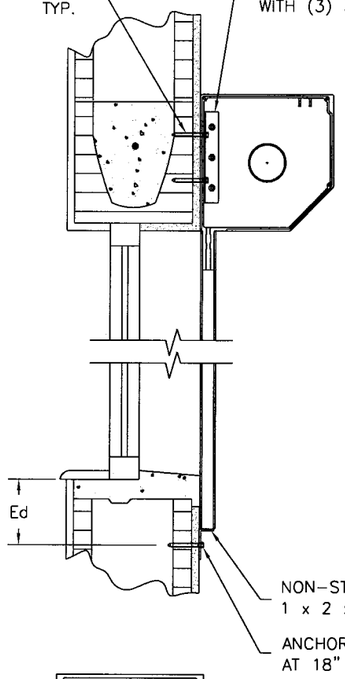


SECTION A-A
SCALE: 1:10

BUILT-OUT CONDITION

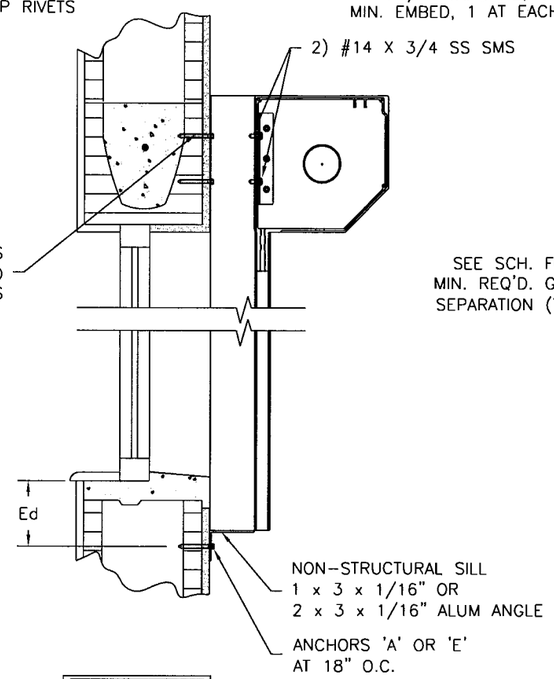


SECTION B-B
SCALE: 1:10

INSIDE MOUNTS

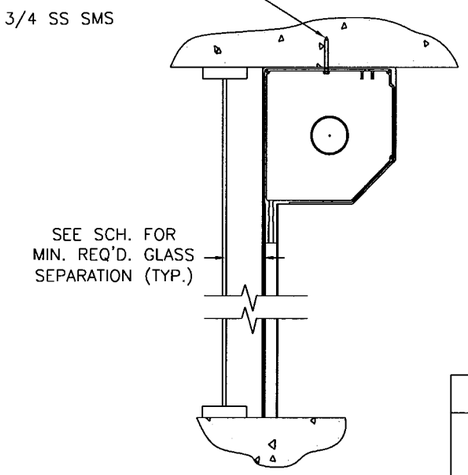


SECTION C-C
SCALE: 1:10

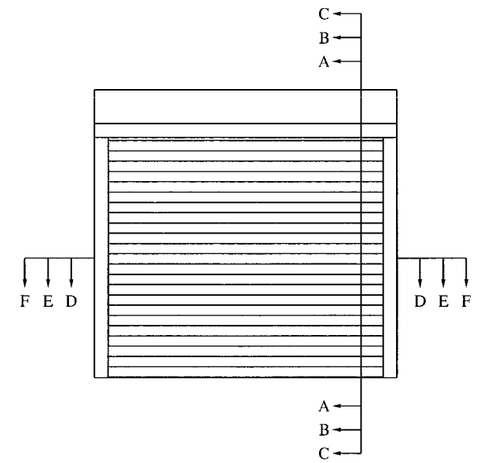


TYPICAL ELEVATION
SINGLE SPAN

| MINIMUM SEPARATION REQ'D. FROM GLASS | |
|---|---|
| FOR INSTALLATIONS ABOVE 30 FT. OF GRADE DUE TO WIND LOAD | FOR INSTALLATIONS UP TO 30 FT. ABOVE GRADE DUE TO LARGE MISSILE IMPACT |
| 3" | 3" |
| NOTE: IF ANY PART OF THE SHUTTER IS LESS THAN 30' ABOVE GRADE LARGE MISSILE IMPACT REQUIREMENTS PREVAIL FOR THE ENTIRE SHUTTER | |

Ed = TYPICAL EDGE DISTANCE
CONC. & BLOCK = 12d (12 ANCHOR DIAMETERS)
WOOD = 5d

ANCHORS: EMBEDMENT & EDGE DISTANCES SHOWN ARE BEYOND THE WALL & FLOOR COVERING (STUCCO, TILES, ETC.)

| ANCHOR TYPE | CHART #, PG 10 OF 19 | | |
|---|---|---|---|
| | CONC. | BLOCK | WOOD |
| A | 3 | 1 | – |
| E | – | – | 4 |

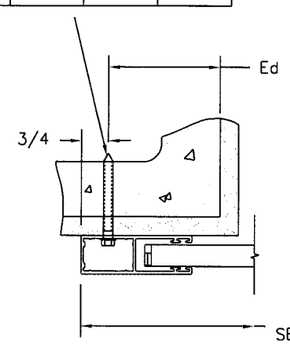


SECTION D-D
SCALE: 1:4

| ANCHOR TYPE | CHART#, PG 10 OF 19 | | |
|---|---|---|---|
| | CONC. | BLOCK | WOOD |
| A | 5 | 3 | – |
| E | – | – | 3 |

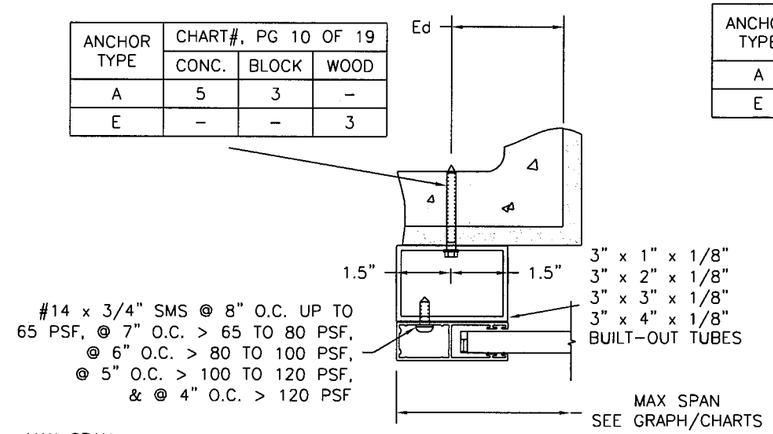


SECTION E-E
SCALE: 1:4

| ANCHOR TYPE | CHART#, PG 10 OF 19 | | |
|---|---|---|---|
| | CONC. | BLOCK | WOOD |
| A | 2 | 1 | – |
| E | – | – | 4 |

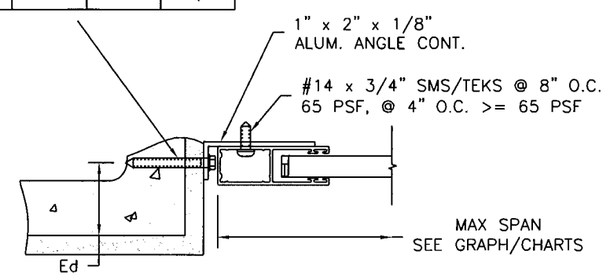


SECTION F-F
SCALE: 1:4

TYPICAL SLAT ENGAGEMENT
INSIDE 3" TRACK = 1 – 1/4" MIN.
INSIDE 2 1/2" TRACK = 1" MIN.

PROCESSED
09-0331-09
11/05/11
By M Thakur
Miami Dade Product Control Division

ROLL-A-WAY BY QMI
1661 GLENLAKE AVENUE.
ITASCA, IL 60143
COPYRIGHT © 2008
QMI

DRAWING TITLE:
AL2-E 40MM SLAT
PRODUCT APPROVAL

D.L. Fowler
Professional Engineer
Florida License No.
PE0050458
3-24-09

| | |
|---|---|
| DRAWN: | DLF |
| DATE: | 07-07-09 |
| APPROVED: | DF |
| DATE: | 07-28-09 |
| DRAWING NO: | 3-01-036 |
| SIZE: B | REV: |
| SCALE: | 3/8" = 1'-0" |
| SHEET: | 6 OF 19 |

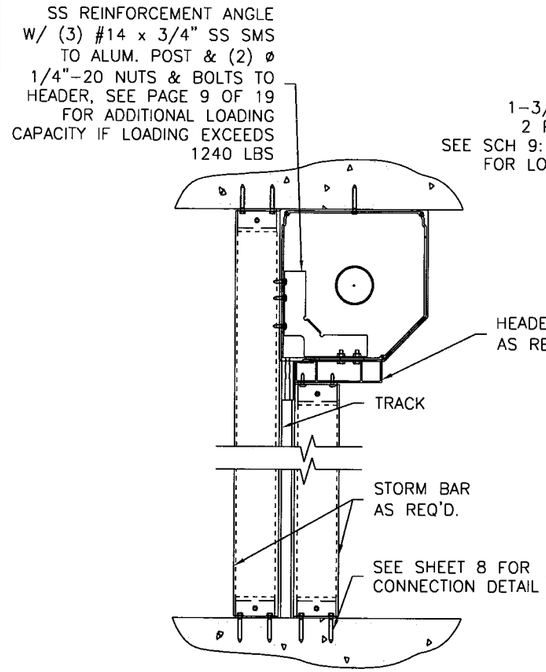


MULTIPLE SPAN SECTION
CEILING TO FLOOR MOUNTS
SCALE 1:10

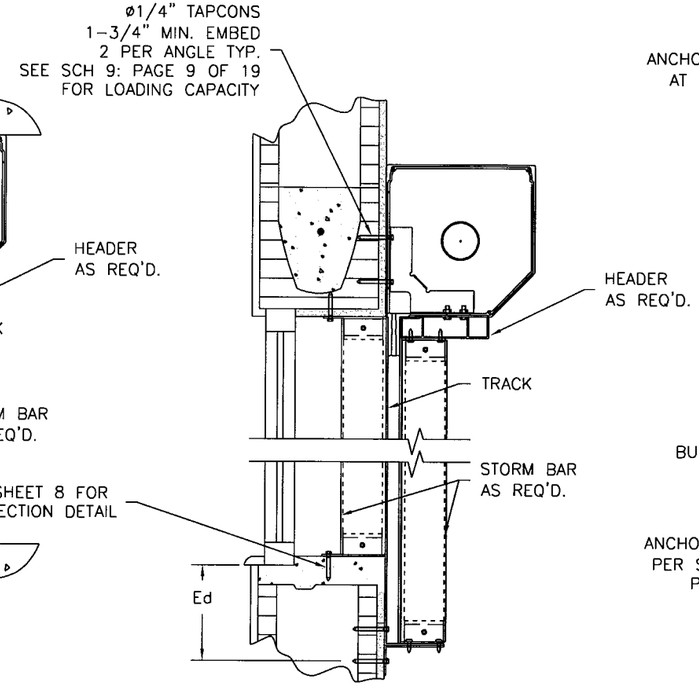


MULTIPLE SPAN SECTION
WALL MOUNTS
SCALE 1:10

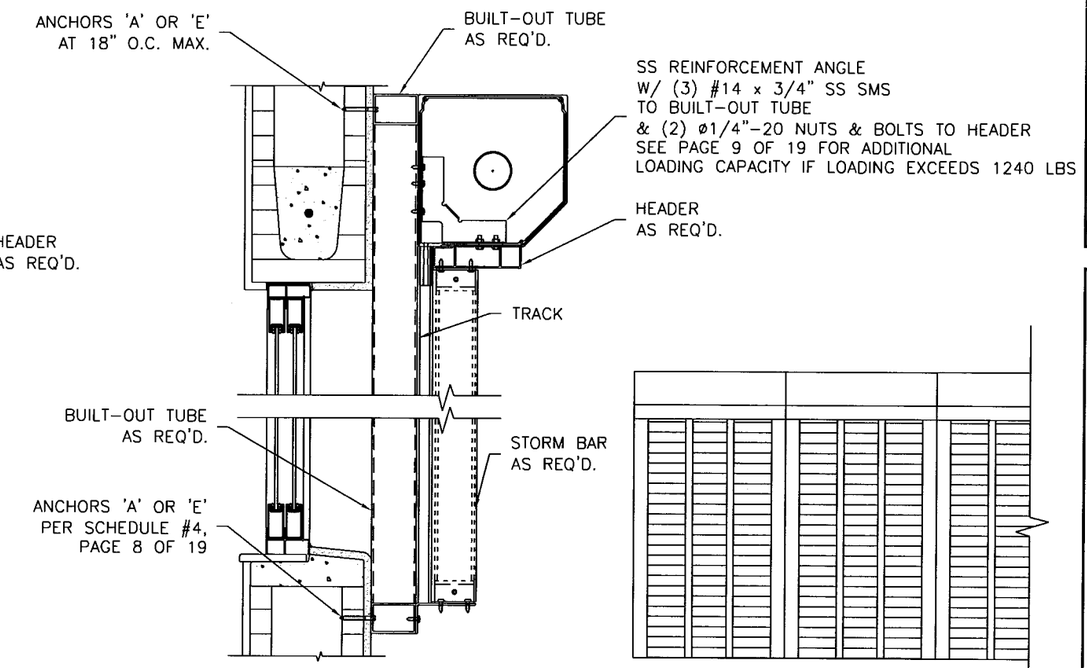


MULTIPLE SPAN SECTION
BUILT-OUT
SCALE 1:10

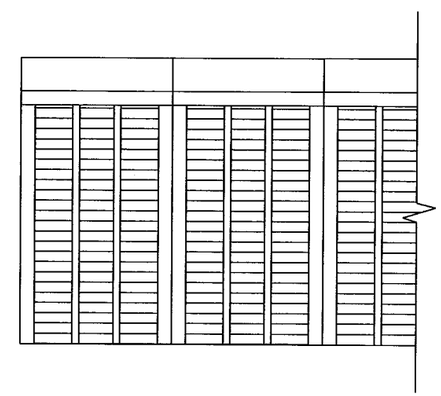

TYPICAL ELEVATION
MULTIPLE SPAN

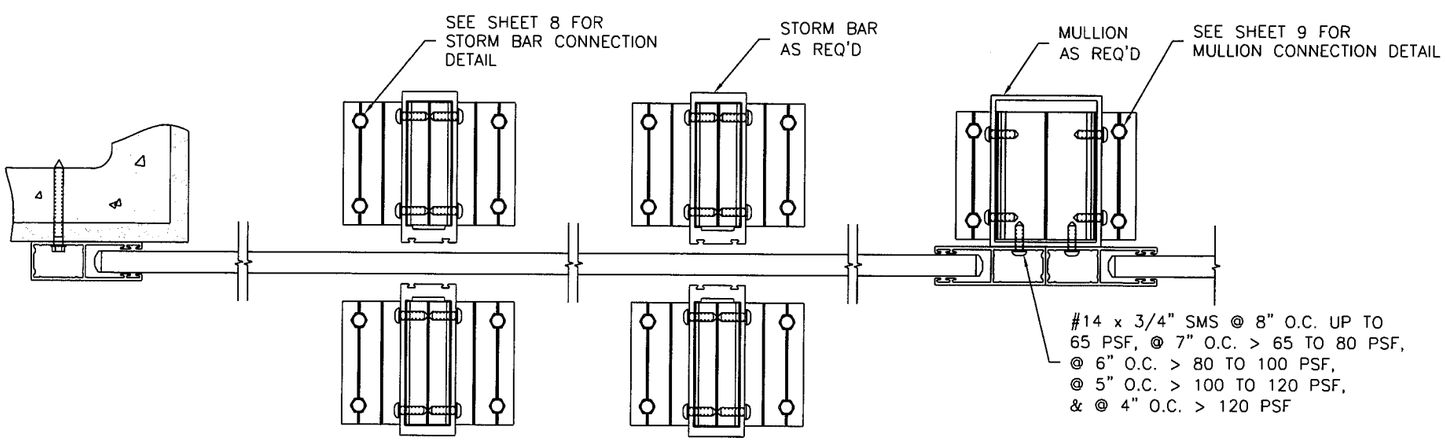


MULTIPLE SPAN PLAN
HEADER NOT SHOWN
SCALE 1:4

PRODUCT APPROVED as conforming to Florida Building Code Acceptance No. 09-0331.09 Expiration Date 11/28/11 By Miami Dade Product Control Division

ROLL-A-WAY BY QMI
1661 GLENLAKE AVENUE
ITASCA, IL 60143
COPYRIGHT © 2008 QMI

DRAWING TITLE:
AL2-E 40MM SLAT
PRODUCT APPROVAL

D.L. Fowler
Professional Engineer
Florida License No.
PE0050458
3-24-09

| | |
|---|---|
| DRAWN: | DLF |
| DATE: | 02-02-09 |
| APPROVED: | DF |
| DATE: | 02-28-09 |
| DRAWING NO: | 3-01-036 |
| SIZE: B | REV: |
| SCALE: | 3/8" = 1'-0" |
| SHEET: | 7 OF 19 |

ALL DIMENSIONS SHOWN Sb, Sw, Sb ETC. ARE IN INCHES.

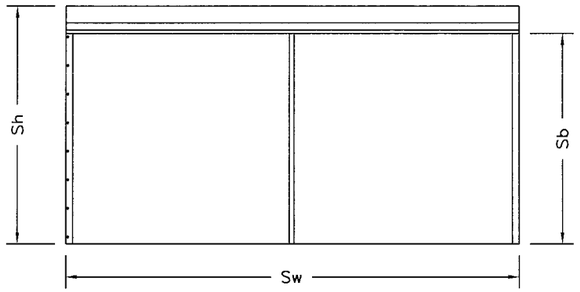


FACTOR = 1.25 FOR 2 SPANS
= 1.10 FOR 3 SPANS
Sb = STORM BAR HEIGHT

LOAD ON STORM BAR ANCHOR: $P = \frac{Sw \times Sb \times PSF/144 \times FACTOR}{2 \times (\#\ OF\ SPANS)}$

IF P > CAPACITY OF FASTENERS SHOWN, ANCHORAGE SYSTEM SHALL BE DESIGNED ON JOB TO JOB BASIS.

2 SPAN LOADING OVER 2070 LBS AND 3 SPAN LOADING OVER 1035 LBS SHALL REQUIRE DOUBLE SS SIDEFRAME BRACKETS.

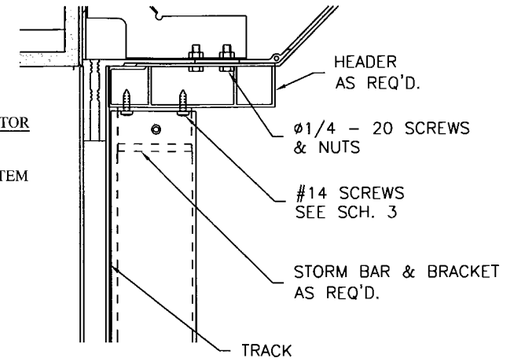


STORM BAR CONNECTION
TO HEADER

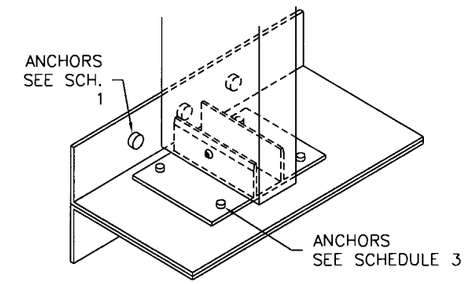


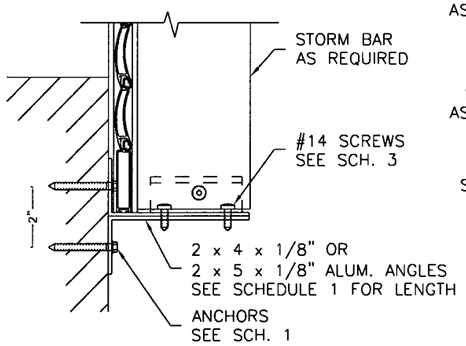


STORM BAR CONNECTION
TO WALL (TOP & BOTTOM)

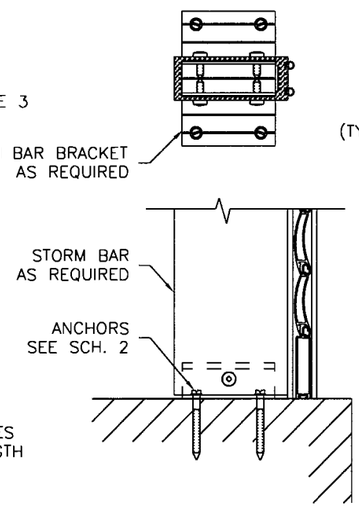


STORM BAR CONNECTION
TO CEILING & FLOOR

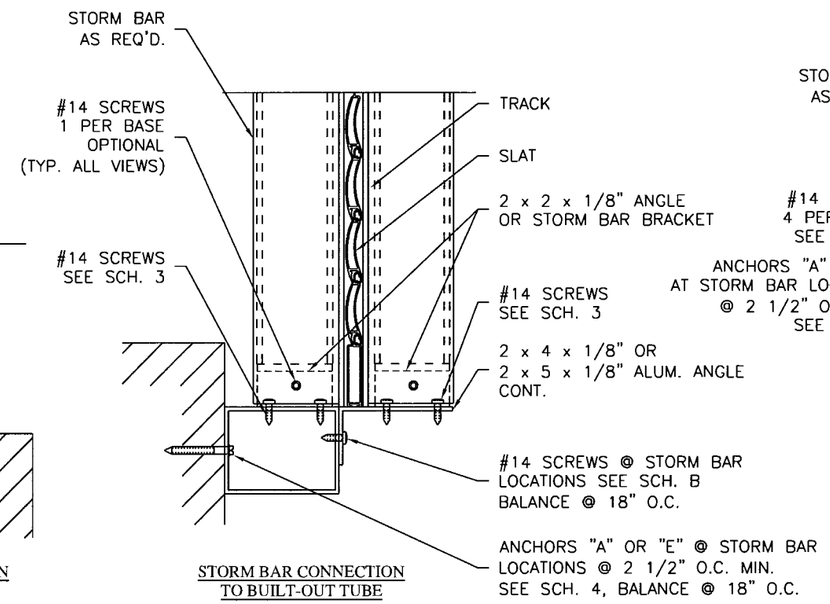


STORM BAR CONNECTION
TO BUILT-OUT TUBE

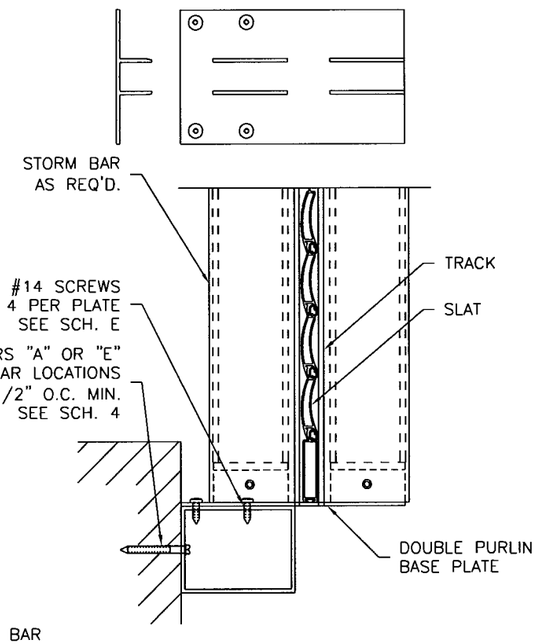


ALT. STORM BAR CONNECTION
TO BUILT-OUT TUBE

SCHEDULE 1

| STORM BAR CONNECTION TO WALL | | | | |
|---|---|---|---|---|
| ALUM. ANGLE LENGTH IN. | NO. OF ANCHORS PER CONNECTION | ANCHOR TYPE | BASE MATERIAL | CONNECTION CAPACITY–lbs |
| 4 | 2 | A | CONC. | 773 |
| | | A | BLOCK | 352 |
| | | E | WOOD | 600 |
| 6 | 4 | A | CONC. | 1546 |
| | | A | BLOCK | 704 |
| | | E | WOOD | 1200 |
| 8 | 6 | A | CONC. | 2319 |
| | | A | BLOCK | 1056 |
| | | E | WOOD | 1800 |
| 10 | 8 | A | CONC. | 3092 |
| | | A | BLOCK | 1408 |
| | | E | WOOD | 2400 |
| 12 | 10 | A | CONC. | 3865 |
| | | A | BLOCK | 1760 |
| | | E | WOOD | 3000 |

SCHEDULE 2

| STORM BAR CONNECTION TO CEILING AND FLOOR | | | |
|---|---|---|---|
| ANCHOR PER SIDE | ANCHOR TYPE | BASE MATERIAL | CONNECTION CAPACITY–lbs |
| 1 | A | CONC. | 950 |
| | A | BLOCK | 796 |
| | E | WOOD | 616 |
| 2 | A | CONC. | 1520 |
| | A | BLOCK | 1274 |
| | E | WOOD | 1232 |
| 3 | N/A | – | – |
| | N/A | – | – |
| | E | WOOD | 1848 |
| 4 | N/A | – | – |
| | N/A | – | – |
| | E | WOOD | 2464 |
| 5 | N/A | – | – |
| | N/A | – | – |
| | E | WOOD | 3080 |

SCHEDULE B

| SINGLE CONNECTION TO TUBE AT STORM BAR LOCATION | |
|---|---|
| # OF SCREWS | CONNECTION CAPACITY–lbs |
| 2 | 400 |
| 3 | 600 |
| 4 | 800 |

SCHEDULE E

| BASE PLATE ANCHOR CAPACITY | |
|---|---|
| NO. OF SCREWS PER PLATE | CONNECTION CAPACITY–lbs |
| 4 | 2068 |

SCHEDULE 3

| STORM BAR BRACKET CONNECTION | | |
|---|---|---|
| STORM BAR SIZE | # OF SCREWS EACH LEG | CONNECTION CAPACITY–lbs |
| 3" BASE PLATE OR 4" BASE PLATE | 1 | 1034 |
| | 2 | 2068 |
| | 3 | 3102 |
| | 4 | 4136 |

SCHEDULE 4

| TUBE CONNECTION TO WALL @ STORM BAR LOCATION | | | |
|---|---|---|---|
| NO. OF ANCHOR | ANCHOR TYPE | BASE MATERIAL | CONNECTION CAPACITY–lbs |
| 2 | A | CONC. | 408 |
| | A | BLOCK | 220 |
| | E | WOOD | 300 |
| 3 | A | CONC. | 612 |
| | A | BLOCK | 330 |
| | E | WOOD | 450 |
| 4 | A | CONC. | 816 |
| | A | BLOCK | 440 |
| | E | WOOD | 600 |
| 5 | A | CONC. | 1020 |
| | A | BLOCK | 550 |
| | E | WOOD | 750 |

Miami-Dade County
Acceptance No. 09-0331.09
Expiration Date 11/08/11
By M Thall
Miami-Dade Product Control Division


ROLL-A-WAY BY QMI
1661 GLENLAKE AVENUE
ITASCA, IL 60143


COPYRIGHT © 2008
QMI


DRAWING TITLE:
AL2-E 40MM SLAT
PRODUCT APPROVAL

D.L. Fowler
Professional Engineer
Florida License No.
PE0050458
3-24-09

| | |
|---|---|
| DRAWN: | DLF |
| DATE: | 07-07-09 |
| APPROVED: | DF |
| DATE: | 07-28-09 |
| DRAWING NO: | 3-01-036 |
| SIZE: B | REV: |
| SCALE: | NTS |
| SHEET: | 8 OF 19 |

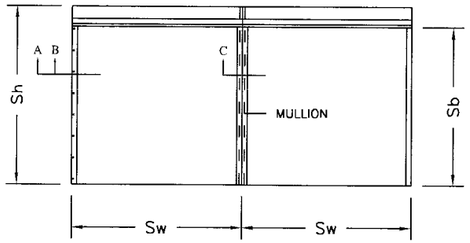


CENTER MULLION ANCHOR LOAD - NO STORM BAR
BOTTOM or TOP LOAD = (Sh x Sw x PSF x 0.0034722) = Lbs

CENTER MULLION ANCHOR LOAD - 2 SPAN
BOTTOM LOAD = (Sh x Sw x PSF x 0.001302) + (.15 x HL) = Lbs
TOP LOAD = (Sh x Sw x PSF x 0.001302) + (2 x HL) = Lbs

END MULLION ANCHOR LOAD - NO STORM BAR
BOTTOM or TOP LOAD = (Sh x Sw x PSF x 0.0017361)= Lbs

END MULLION ANCHOR LOAD - 2 SPAN
BOTTOM LOAD = (Sh x Sw x PSF x 0.000651) + (.15 x HL)= Lbs
TOP LOAD = (Sh x Sw x PSF X 0.000651) + HL = Lbs

HEADER CONNECTION LOAD - 2 SPAN (LEFT & RIGHT)
HL = (Sh x Sw x PSF x 0.001085) = Lbs

CENTER MULLION ANCHOR LOAD - 3 SPAN
BOTTOM LOAD = (Sh x Sw x PSF x 0.000926) + (.15 x HL3) = Lbs
TOP LOAD = (Sh x Sw x PSF x 0.000926) + (2 x HL3) = Lbs

END MULLION ANCHOR LOAD - 3 SPAN
BOTTOM LOAD = (Sh x Sw x PSF x 0.000463) + (.15 x HL3)= Lbs
TOP LOAD = (Sh x Sw x PSF X 0.000463) + HL3 = Lbs

HEADER CONNECTION LOAD - 3 SPAN (LEFT & RIGHT)
HL3 = (Sh x Sw x PSF x 0.0012731) = Lbs

IF ANY ANCHOR LOAD IS > SCHEDULE ANCHOR CAPACITY OF FASTENER SHOWN, AN ANCHORAGE SYSTEM SHALL BE DESIGNED ON A JOB BY JOB BASIS.

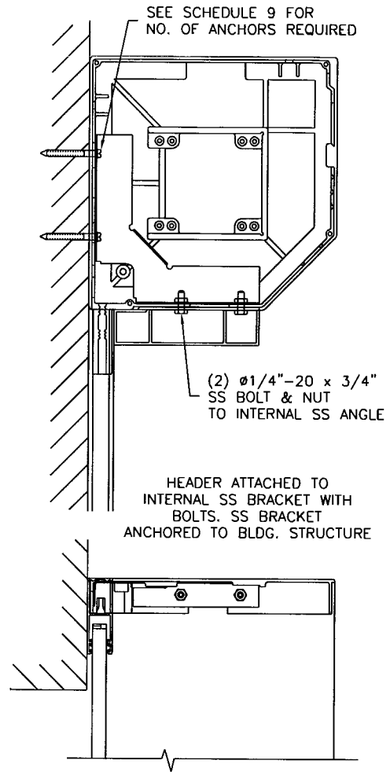


Ⓐ HEADER CONNECTION TO WALL BRACKET ONLY (PLAN VIEW)
UNIT STRENGTH PER SCH. 9
SCALE: 1:6

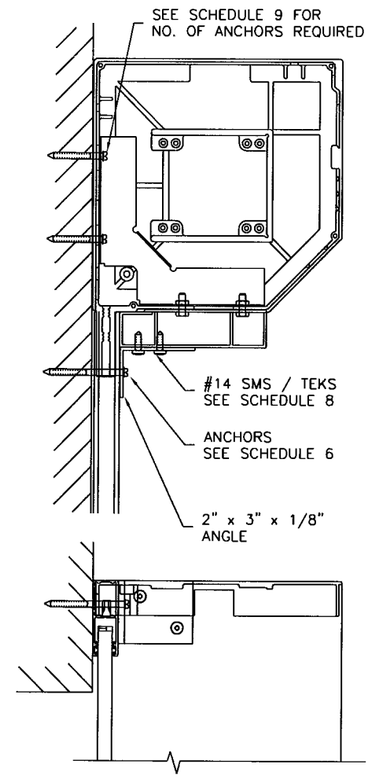


Ⓑ HEADER CONNECTION TO WALL ANGLE & BRACKET (PLAN VIEW)
UNIT STRENGTH = SCH. 9 + SCH. 6
SCALE: 1:6

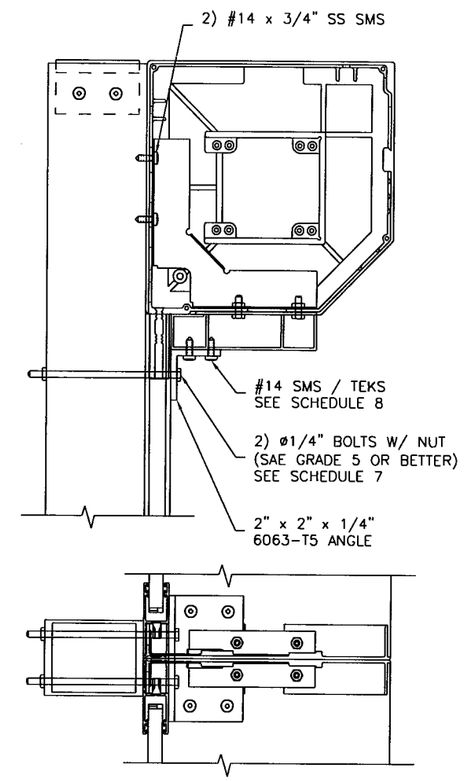


Ⓒ HEADER CONNECTION TO MULLION (PLAN VIEW)
UNIT STRENGTH = (LEAST OF SCH. 7 OR 8) + 600 LBS
SCALE: 1:6

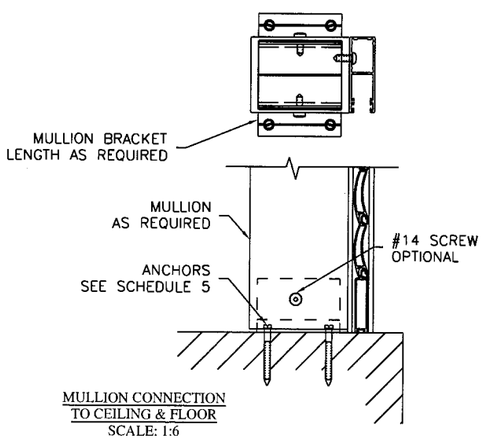


MULLION CONNECTION TO CEILING & FLOOR
SCALE: 1:6

SCHEDULE 5

| MULLION CONNECTION TO CEILING AND FLOOR | | | |
|---|---|---|---|
| ANCHOR PER SIDE | ANCHOR TYPE | BASE MATERIAL | CONNECTION CAPACITY-lbs |
| 1 | A | CONC. | 950 |
| | A | BLOCK | 796 |
| | E | WOOD | 616 |
| | R | CONC. | 3200 |
| 2 | A | CONC. | 1520 |
| | A | BLOCK | 1274 |
| | E | WOOD | 1232 |
| 4 | A | CONC. | – |
| | A | BLOCK | – |
| | E | WOOD | 2464 |

SCHEDULE 6

| HEADER CONNECTION TO WALL | | | | |
|---|---|---|---|---|
| ALUM. ANGLE LENGTH IN. | NO. OF ANCHORS PER CONNECTION | ANCHOR TYPE | BASE MATERIAL | CONNECTION CAPACITY-lbs |
| 3 | 1 | A | CONC. | 483 |
| | | A | BLOCK | 218 |
| | | R | CONC. | 1115 |
| | 2 | E | WOOD | 456 |
| 6 | 4 | N/A | – | – |
| | | E | WOOD | 912 |
| 8 | 6 | E | WOOD | 1368 |

SCHEDULE 7

| HEADER CONNECTION TO MULLION | | |
|---|---|---|
| NO. OF BOLTS | ANGLE LENGTH IN. | CONNECTION CAPACITY-lbs |
| 2 | 3 | 1187 |
| 3 | 4 | 1781 |
| 4 | 6 | 2374 |
| 6 | 8 | 3052 |

SCHEDULE 8

| ANGLE CONNECTION TO HEADER | | |
|---|---|---|
| NO. OF SCREWS | ANGLE LENGTH IN. | CONNECTION CAPACITY-lbs |
| 2 | 3 | 1640 |
| 4 | 4 | 3052 |

SCHEDULE 9

| HEADER/END CASTING CONNECTION TO WALL | | | |
|---|---|---|---|
| NO. OF ANCHORS | ANCHOR TYPE | BASE MATERIAL | CONNECTION CAPACITY-lbs |
| 1 | A | CONC. | 724 |
| | A | BLOCK | 327 |
| | E | WOOD | 300 |
| | R | CONC. | 1115 |
| 2 | A | CONC. | 966 |
| | A | BLOCK | 436 |
| | E | WOOD | 600 |
| 3 | A | CONC. | – |
| | A | BLOCK | – |
| | E | WOOD | 750 |

09-0331.09
11/08/11
Illinois Dept. Public Health
Division

ROLL-A-WAY BY QMI
1661 GLENLAKE AVENUE
ITASCA, IL 60143
COPYRIGHT © 2008 QMI

DRAWING TITLE:
AL2-E 40MM SLAT
PRODUCT APPROVAL

D.L. Fowler
Professional Engineer
Florida License No.
PE0050458
3-24-09

| | |
|---|---|
| DRAWN: | DLF |
| DATE: | 02-02-09 |
| APPROVED: | DF |
| DATE: | 02-28-09 |
| DRAWING NO: | 3-01-036 |
| SIZE: B | REV: |
| SCALE: | 3/8" = 1'-0" |
| SHEET: | 9 OF 19 |

**ANCHOR CHARTS FOR SLAT WIDTH COMPLIANCE CHECK ***
SLAT WIDTH MAXIMUM LIMIT VERSUS ANCHOR SPACING

| DESIGN LOADS, PSF | ANCHOR CHART 1 | | | ANCHOR CHART 2 | | | ANCHOR CHART 3 | | | ANCHOR CHART 4 | | | ANCHOR CHART 5 | |
|---|---|---|---|---|---|---|---|---|---|---|---|---|---|---|
| | 8" O.C. | 6" O.C. | 3" O.C. | 8" O.C. | 6" O.C. | 3" O.C. | 8" O.C. | 6" O.C. | 3" O.C. | 8" O.C. | 6" O.C. | 3" O.C. | 8" O.C. | 6" O.C. |
| 30 | 37 | 50 | 70 | 70 | 70 | 70 | 70 | 70 | 70 | 51 | 69 | 70 | 70 | 70 |
| 35 | 32 | 43 | 70 | 70 | 70 | 70 | 70 | 70 | 70 | 44 | 59 | 70 | 70 | 70 |
| 40 | 28 | 37 | 70 | 62 | 70 | 70 | 70 | 70 | 70 | 39 | 51 | 70 | 70 | 70 |
| 45 | 25 | 33 | 66 | 55 | 70 | 70 | 70 | 70 | 70 | 34 | 46 | 70 | 70 | 70 |
| 50 | 22 | 30 | 60 | 50 | 66 | 70 | 70 | 70 | 70 | 31 | 41 | 70 | 70 | 70 |
| 55 | 20 | 27 | 54 | 45 | 60 | 70 | 70 | 70 | 70 | 28 | 37 | 70 | 70 | 70 |
| 60 | N/A | 25 | 50 | 41 | 55 | 70 | 70 | 70 | 70 | 26 | 34 | 69 | 70 | 70 |
| 65 | N/A | 23 | 46 | 38 | 51 | 70 | 67 | 70 | 70 | 24 | 32 | 63 | 70 | 70 |
| 70 | N/A | 21 | 43 | 36 | 47 | 70 | 62 | 70 | 70 | 22 | 29 | 59 | 70 | 70 |
| 75 | N/A | N/A | 40 | 33 | 44 | 70 | 58 | 70 | 70 | 21 | 27 | 55 | 70 | 70 |
| 80 | N/A | N/A | 37 | 31 | 41 | 70 | 54 | 70 | 70 | N/A | 26 | 51 | 70 | 70 |
| 85 | N/A | N/A | 35 | 29 | 39 | 70 | 51 | 68 | 70 | N/A | 24 | 48 | 70 | 70 |
| 90 | N/A | N/A | 33 | 28 | 37 | 70 | 48 | 64 | 70 | N/A | 23 | 46 | 70 | 70 |
| 95 | N/A | N/A | 31 | 26 | 35 | 70 | 46 | 61 | 70 | N/A | 22 | 43 | 70 | 70 |
| 100 | N/A | N/A | 30 | 25 | 33 | 66 | 44 | 58 | 70 | N/A | 21 | 41 | 70 | 70 |
| 110 | N/A | N/A | 27 | 23 | 30 | 60 | 40 | 53 | 70 | N/A | N/A | 37 | 70 | 70 |
| 120 | N/A | N/A | 25 | 21 | 28 | 55 | 36 | 48 | 70 | N/A | N/A | 34 | 70 | 70 |

*** INSTALLED SLAT WIDTHS MUST NOT EXCEED THE SLAT PERFOMANCE CHART ON PAGE 1 OF 19**

**SLAT WIDTH** = SHUTTER WIDTH/# OF SPANS

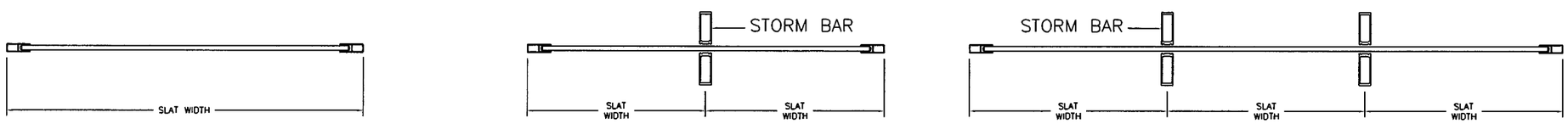


ONE SPAN

TWO SPANS

THREE SPANS

**TYPICAL ANCHORS**

ANCHOR TYPE "A" = 1/4"Ø TAPCON 1-3/4" EMBEDMENT TO CONCRETE
1-1/4" EMBEDMENT TO BLOCK

ANCHOR TYPE "E" = #14 SMS OR 1/4" Ø LAG SCREWS INTO WOOD. (SG = 0.47)
1-1/2" MIN. PENETRATION

ANCHOR TYPE "R" = 3/8" POWERS FASTENER - POWER BOLT
2" MIN. PENETRATION

NOTE: ANCHORS USE FULL EMBEDMENT IN CONCRETE BEYOND THE COVERING (STUCCO, TILES, ETC.). 2000 PSI CONCRETE MIN.

**FASTENER SPACING IN MASONRY**

CHARTS ARE BASED ON TYPICAL EDGE DISTANCE = 12d.
FOR LESSER EDGE DISTANCE DECREASE SPACING BY MULTIPLYING WITH THE FACTOR BELOW

| EDGE DIST. | 12d=3" | 10d=2-1/2" | 8d=2" | 6d=1-1/2" | 5d=1-1/4" |
|---|---|---|---|---|---|
| FACTOR | 1.00 | 0.86 | 0.71 | 0.57 | 0.50 |

EXAMPLE: FOR 3" EDGE DIST. SPACING = 12" O.C. (FROM CHART)
FOR 2" EDGE DIST. SPACING = 12 x .71 = 8.5" O.C.

TYPICAL EDGE DISTANCE IN WOOD CONSTRUCTION = 1 1/4"
NO REDUCTION ALLOWED

Building Code Acceptance No. 09-0331.09
Expiration Date 11/02/11
By Miami-Dade Product Control Division

By Miami-Dade Product Control Division

ROLL-A-WAY BY QMI
1661 GLENLAKE AVENUE
ITASCA, IL 60143
COPYRIGHT © 2008 QMI

DRAWING TITLE:
AL2-E 40MM SLAT
PRODUCT APPROVAL

D.L. Fowler
Professional Engineer
Florida License No.
PE0050458

3-24-09

| | |
|---|---|
| DRAWN: | DLF |
| DATE: | 02-02-09 |
| APPROVED: | DF |
| DATE: | 02-28-09 |
| DRAWING NO: | 3-01-036 |
| SIZE: B | REV: |
| SCALE: | 3/4" = 1'-0" |
| SHEET: | 10 OF 19 |

**MAXIMUM ALLOWABLE SHUTTER WIDTHS PER MULLION HEIGHT ***
2" x 3" CENTER MULLION, SINGLE SPANS

| DESIGN LOADS, PSF | 96" MULLION | 90" MULLION | 84" MULLION | 78" MULLION | 72" MULLION | 66" MULLION | 60" MULLION | 54" MULLION | 48" MULLION | 42" MULLION |
|---|---|---|---|---|---|---|---|---|---|---|
| 40 | 26 | 31 | 38 | 48 | 61 | 79 | 80 | 80 | 80 | 80 |
| 50 | 21 | 25 | 31 | 38 | 49 | 63 | 84 | 80 | 80 | 80 |
| 60 | 17 | 21 | 26 | 32 | 41 | 53 | 70 | 80 | 80 | 80 |
| 70 | 15 | 18 | 22 | 27 | 35 | 45 | 60 | 83 | 80 | 80 |
| 80 | 13 | 16 | 19 | 24 | 30 | 40 | 53 | 72 | 80 | 80 |
| 90 | 11 | 14 | 17 | 21 | 27 | 35 | 47 | 64 | 80 | 80 |
| 100 | 10 | 12 | 15 | 19 | 24 | 32 | 42 | 58 | 82 | 80 |
| 110 | 9 | 11 | 14 | 17 | 22 | 29 | 38 | 53 | 75 | 80 |
| 120 | 9 | 10 | 13 | 16 | 20 | 26 | 35 | 48 | 69 | 80 |
| 130 | 8 | 10 | 12 | 15 | 19 | 24 | 32 | 44 | 63 | 80 |
| 140 | 7 | 9 | 11 | 14 | 17 | 23 | 30 | 41 | 59 | 88 |
| 150 | 7 | 8 | 10 | 13 | 16 | 21 | 28 | 39 | 55 | 82 |
| 160 | 6 | 8 | 10 | 12 | 15 | 20 | 26 | 36 | 51 | 77 |
| 170 | 6 | 7 | 9 | 11 | 14 | 19 | 25 | 34 | 48 | 72 |
| 180 | 6 | 7 | 9 | 11 | 14 | 18 | 23 | 32 | 46 | 68 |
| 190 | 5 | 7 | 8 | 10 | 13 | 17 | 22 | 30 | 43 | 65 |
| 200 | 5 | 6 | 8 | 10 | 12 | 16 | 21 | 29 | 41 | 61 |
| 210 | 5 | 6 | 7 | 9 | 12 | 15 | 20 | 28 | 39 | 59 |
| 220 | 5 | 6 | 7 | 9 | 11 | 14 | 19 | 26 | 37 | 56 |

**MAXIMUM ALLOWABLE SHUTTER WIDTHS PER MULLION HEIGHT ***
2" x 3" CENTER MULLION, TWO SPANS

| DESIGN LOADS, PSF | 96" MULLION | 90" MULLION | 84" MULLION | 78" MULLION | 72" MULLION | 66" MULLION | 60" MULLION | 54" MULLION | 48" MULLION | 42" MULLION |
|---|---|---|---|---|---|---|---|---|---|---|
| 40 | 49 | 60 | 72 | 89 | 110 | 139 | 160 | 160 | 160 | 160 |
| 50 | 40 | 48 | 57 | 71 | 88 | 111 | 146 | 160 | 160 | 160 |
| 60 | 33 | 40 | 48 | 59 | 74 | 93 | 121 | 160 | 160 | 160 |
| 70 | 28 | 34 | 41 | 51 | 63 | 80 | 104 | 140 | 160 | 160 |
| 80 | 25 | 30 | 36 | 44 | 55 | 70 | 91 | 123 | 160 | 160 |
| 90 | 22 | 27 | 32 | 39 | 49 | 62 | 81 | 109 | 151 | 160 |
| 100 | 20 | 24 | 29 | 35 | 44 | 56 | 73 | 98 | 136 | 160 |
| 110 | 18 | 22 | 26 | 32 | 40 | 51 | 66 | 89 | 124 | 160 |
| 120 | 16 | 20 | 24 | 30 | 37 | 46 | 61 | 82 | 114 | 160 |
| 130 | 15 | 18 | 22 | 27 | 34 | 43 | 56 | 75 | 105 | 150 |
| 140 | 14 | 17 | 20 | 25 | 32 | 40 | 52 | 70 | 97 | 139 |
| 150 | 13 | 16 | 19 | 24 | 29 | 37 | 49 | 65 | 91 | 130 |
| 160 | 12 | 15 | 18 | 22 | 28 | 35 | 45 | 61 | 85 | 122 |
| 170 | 12 | 14 | 17 | 21 | 26 | 33 | 43 | 58 | 80 | 114 |
| 180 | 11 | 13 | 16 | 20 | 25 | 31 | 40 | 54 | 76 | 108 |
| 190 | 10 | 13 | 15 | 19 | 23 | 29 | 38 | 52 | 72 | 102 |
| 200 | 10 | 12 | 14 | 18 | 22 | 28 | 36 | 49 | 68 | 97 |
| 210 | 9 | 11 | 14 | 17 | 21 | 27 | 35 | 47 | 65 | 93 |
| 220 | 9 | 11 | 13 | 16 | 20 | 25 | 33 | 45 | 62 | 88 |

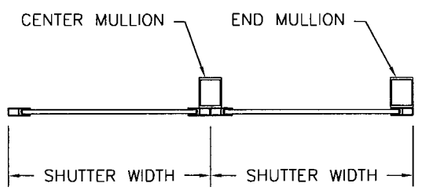


SINGLE SPANS

* MULLION PERFORMANCE CHARTS ONLY.
SEE PAGES 16 & 17 FOR (2 SPAN), SEE PAGE 1 (1 SPAN)
FOR ALLOWABLE SHUTTER SIZES.

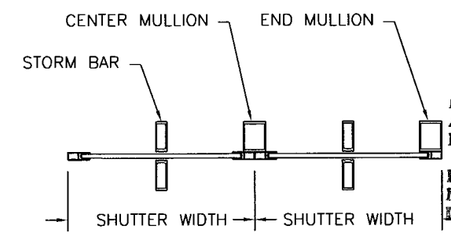


TWO SPANS

Building Code
Acceptance No 09-0331.09
Expiration Date 11/08/11
By M Thanh
Miami Dade Product Control Division

**MAXIMUM ALLOWABLE SHUTTER WIDTHS PER MULLION HEIGHT ***
2" x 3" END MULLION, SINGLE SPANS

| DESIGN LOADS, PSF | 102" MULLION | 96" MULLION | 90" MULLION | 84" MULLION | 78" MULLION | 72" MULLION | 66" MULLION | 60" MULLION | 54" MULLION | 48" MULLION |
|---|---|---|---|---|---|---|---|---|---|---|
| 40 | 43 | 51 | 62 | 70 | 70 | 70 | 70 | 70 | 70 | 70 |
| 50 | 34 | 41 | 50 | 61 | 70 | 70 | 70 | 70 | 70 | 70 |
| 60 | 29 | 34 | 42 | 51 | 64 | 70 | 70 | 70 | 70 | 70 |
| 70 | 25 | 29 | 36 | 44 | 55 | 70 | 70 | 70 | 70 | 70 |
| 80 | 21 | 26 | 31 | 38 | 48 | 61 | 70 | 70 | 70 | 70 |
| 90 | 19 | 23 | 28 | 34 | 43 | 54 | 70 | 70 | 70 | 70 |
| 100 | 17 | 21 | 25 | 31 | 38 | 49 | 63 | 70 | 70 | 70 |
| 110 | 16 | 19 | 23 | 28 | 35 | 44 | 58 | 70 | 70 | 70 |
| 120 | 14 | 17 | 21 | 26 | 32 | 41 | 53 | 70 | 70 | 70 |
| 130 | 13 | 16 | 19 | 24 | 30 | 38 | 49 | 65 | 70 | 70 |
| 140 | 12 | 15 | 18 | 22 | 27 | 35 | 45 | 60 | 70 | 70 |
| 150 | 11 | 14 | 17 | 20 | 26 | 33 | 42 | 56 | 70 | 70 |
| 160 | 11 | 13 | 16 | 19 | 24 | 30 | 40 | 53 | 70 | 70 |
| 170 | 10 | 12 | 15 | 18 | 23 | 29 | 37 | 50 | 68 | 70 |
| 180 | 10 | 11 | 14 | 17 | 21 | 27 | 35 | 47 | 64 | 70 |
| 190 | 9 | 11 | 13 | 16 | 20 | 26 | 33 | 44 | 61 | 70 |
| 200 | 9 | 10 | 12 | 15 | 19 | 24 | 32 | 42 | 58 | 70 |
| 210 | 8 | 10 | 12 | 15 | 18 | 23 | 30 | 40 | 55 | 70 |
| 220 | 8 | 9 | 11 | 14 | 17 | 22 | 29 | 38 | 53 | 70 |

**MAXIMUM ALLOWABLE SHUTTER WIDTHS PER MULLION HEIGHT ***
2" x 3" END MULLION, TWO SPANS

| DESIGN LOADS, PSF | 108" MULLION | 102" MULLION | 96" MULLION | 90" MULLION | 84" MULLION | 78" MULLION | 72" MULLION | 66" MULLION | 60" MULLION | 54" MULLION |
|---|---|---|---|---|---|---|---|---|---|---|
| 40 | 70 | 82 | 97 | 120 | 142 | 160 | 160 | 160 | 160 | 160 |
| 50 | 56 | 66 | 77 | 96 | 113 | 139 | 160 | 160 | 160 | 160 |
| 60 | 47 | 55 | 65 | 80 | 95 | 116 | 142 | 160 | 160 | 160 |
| 70 | 40 | 47 | 55 | 69 | 81 | 99 | 122 | 155 | 160 | 160 |
| 80 | 35 | 41 | 48 | 60 | 71 | 87 | 106 | 136 | 160 | 160 |
| 90 | 31 | 37 | 43 | 53 | 63 | 77 | 95 | 121 | 158 | 160 |
| 100 | 28 | 33 | 39 | 48 | 57 | 69 | 85 | 109 | 142 | 160 |
| 110 | 26 | 30 | 35 | 44 | 52 | 63 | 77 | 99 | 129 | 160 |
| 120 | 23 | 27 | 32 | 40 | 47 | 58 | 71 | 90 | 118 | 149 |
| 130 | 22 | 25 | 30 | 37 | 44 | 53 | 65 | 84 | 109 | 137 |
| 140 | 20 | 24 | 28 | 34 | 41 | 50 | 61 | 78 | 101 | 127 |
| 150 | 19 | 22 | 26 | 32 | 38 | 46 | 57 | 72 | 95 | 118 |
| 160 | 18 | 21 | 24 | 30 | 35 | 43 | 53 | 68 | 89 | 111 |
| 170 | 17 | 19 | 23 | 28 | 33 | 41 | 50 | 64 | 84 | 104 |
| 180 | 16 | 18 | 22 | 27 | 32 | 39 | 47 | 60 | 79 | 98 |
| 190 | 15 | 17 | 20 | 25 | 30 | 37 | 45 | 57 | 75 | 92 |
| 200 | 14 | 16 | 19 | 24 | 28 | 35 | 43 | 54 | 71 | 87 |
| 210 | 13 | 16 | 18 | 23 | 27 | 33 | 41 | 52 | 68 | 83 |
| 220 | 13 | 15 | 18 | 22 | 26 | 32 | 39 | 49 | 65 | 79 |


ROLL-A-WAY BY QMI
1661 GLENLAKE AVENUE
ITASCA, IL 60143


COPYRIGHT © 2008
QMI


DRAWING TITLE:
AL2-E 40MM SLAT
PRODUCT APPROVAL


D.L. Fowler
Professional Engineer
Florida License No.
PE0050458


3-24-09

| | |
|---|---|
| DRAWN: | DLF |
| DATE: | 02-02-09 |
| APPROVED: | DF |
| DATE: | 02-28-09 |
| DRAWING NO: | 3-01-036 |
| SIZE: B | REV: |
| SCALE: | 1" = 5" |
| SHEET: | 11 OF 19 |

**MAXIMUM ALLOWABLE SHUTTER WIDTHS PER MULLION HEIGHT ***
2" x 3" CENTER MULLION, THREE SPANS

| DESIGN LOADS, PSF | 84" MULLION | 78" MULLION | 72" MULLION | 66" MULLION | 60" MULLION | 54" MULLION | 48" MULLION | 42" MULLION | 36" MULLION |
|---|---|---|---|---|---|---|---|---|---|
| 40 | 85 | 103 | 128 | 161 | 208 | 230 | 230 | 230 | 230 |
| 50 | 68 | 82 | 102 | 129 | 166 | 220 | 230 | 230 | 230 |
| 60 | 56 | 69 | 85 | 107 | 139 | 184 | 230 | 230 | 230 |
| 70 | 48 | 59 | 73 | 92 | 119 | 157 | 216 | 230 | 230 |
| 80 | 42 | 52 | 64 | 80 | 104 | 138 | 189 | 230 | 230 |
| 90 | 38 | 46 | 57 | 72 | 92 | 122 | 168 | 227 | 230 |
| 100 | 34 | 41 | 51 | 64 | 83 | 110 | 151 | 205 | 230 |
| 110 | 31 | 37 | 46 | 59 | 76 | 100 | 137 | 186 | 230 |
| 120 | 28 | 34 | 43 | 54 | 69 | 92 | 126 | 170 | 212 |
| 130 | 26 | 32 | 39 | 50 | 64 | 85 | 116 | 157 | 196 |
| 140 | 24 | 29 | 37 | 46 | 59 | 79 | 108 | 146 | 182 |
| 150 | 23 | 27 | 34 | 43 | 55 | 73 | 101 | 136 | 170 |
| 160 | 21 | 26 | 32 | 40 | 52 | 69 | 94 | 128 | 159 |
| 170 | 20 | 24 | 30 | 38 | 49 | 65 | 89 | 120 | 150 |
| 180 | 19 | 23 | 28 | 36 | 46 | 61 | 84 | 114 | 141 |
| 190 | 18 | 22 | 27 | 34 | 44 | 58 | 79 | 108 | 134 |
| 200 | 17 | 21 | 26 | 32 | 42 | 55 | 75 | 102 | 127 |
| 210 | 16 | 20 | 24 | 31 | 40 | 52 | 72 | 97 | 121 |
| 220 | 15 | 19 | 23 | 29 | 38 | 50 | 69 | 93 | 116 |

**MAXIMUM ALLOWABLE SHUTTER WIDTHS PER MULLION HEIGHT ***
3" x 4" CENTER MULLION, SINGLE SPANS

| DESIGN LOADS, PSF | 132" MULLION | 120" MULLION | 108" MULLION | 102" MULLION | 96" MULLION | 90" MULLION | 84" MULLION | 78" MULLION | 72" MULLION | 66" MULLION |
|---|---|---|---|---|---|---|---|---|---|---|
| 40 | 47 | 63 | 80 | 80 | 80 | 80 | 80 | 80 | 80 | 80 |
| 50 | 38 | 50 | 69 | 80 | 80 | 80 | 80 | 80 | 80 | 80 |
| 60 | 31 | 42 | 57 | 68 | 80 | 80 | 80 | 80 | 80 | 80 |
| 70 | 27 | 36 | 49 | 58 | 70 | 80 | 80 | 80 | 80 | 80 |
| 80 | 24 | 31 | 43 | 51 | 61 | 74 | 80 | 80 | 80 | 80 |
| 90 | 21 | 28 | 38 | 45 | 54 | 66 | 80 | 80 | 80 | 80 |
| 100 | 19 | 25 | 34 | 41 | 49 | 60 | 73 | 80 | 80 | 80 |
| 110 | 17 | 23 | 31 | 37 | 45 | 54 | 67 | 80 | 80 | 80 |
| 120 | 16 | 21 | 29 | 34 | 41 | 50 | 61 | 76 | 80 | 80 |
| 130 | 15 | 19 | 26 | 31 | 38 | 46 | 56 | 70 | 80 | 80 |
| 140 | 13 | 18 | 25 | 29 | 35 | 43 | 52 | 65 | 80 | 80 |
| 150 | 13 | 17 | 23 | 27 | 33 | 40 | 49 | 61 | 78 | 80 |
| 160 | 12 | 16 | 22 | 26 | 31 | 37 | 46 | 57 | 73 | 80 |
| 170 | 11 | 15 | 20 | 24 | 29 | 35 | 43 | 54 | 68 | 80 |
| 180 | 10 | 14 | 19 | 23 | 27 | 33 | 41 | 51 | 65 | 80 |
| 190 | 10 | 13 | 18 | 22 | 26 | 31 | 39 | 48 | 61 | 79 |
| 200 | 9 | 13 | 17 | 20 | 25 | 30 | 37 | 46 | 58 | 75 |
| 210 | 9 | 12 | 16 | 19 | 23 | 28 | 35 | 44 | 55 | 72 |
| 220 | 9 | 11 | 16 | 19 | 22 | 27 | 33 | 42 | 53 | 69 |

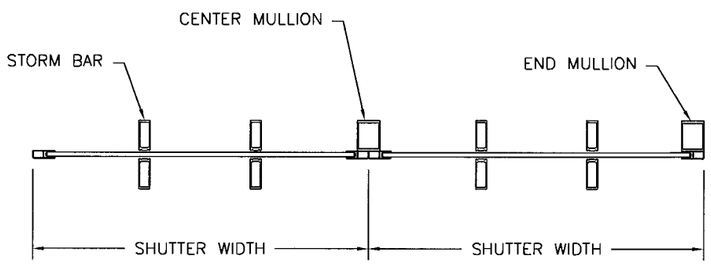


THREE SPANS

*MULLION PERFORMANCE CHARTS ONLY.
SEE PAGES 18 & 19 (3 SPAN), PAGE 1 (1 SPAN)
FOR ALLOWABLE SHUTTER SIZES.

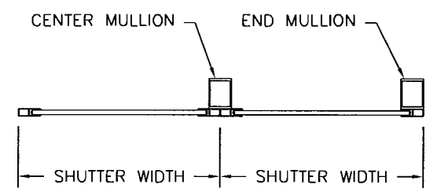


SINGLE SPANS

**MAXIMUM ALLOWABLE SHUTTER WIDTHS PER MULLION HEIGHT ***
2" x 3" END MULLION, THREE SPANS

| DESIGN LOADS, PSF | 102" MULLION | 96" MULLION | 90" MULLION | 84" MULLION | 78" MULLION | 72" MULLION | 66" MULLION | 60" MULLION | 54" MULLION | 48" MULLION |
|---|---|---|---|---|---|---|---|---|---|---|
| 40 | 100 | 119 | 141 | 168 | 207 | 230 | 230 | 230 | 230 | 230 |
| 50 | 80 | 95 | 113 | 135 | 166 | 204 | 230 | 230 | 230 | 230 |
| 60 | 67 | 79 | 94 | 112 | 138 | 170 | 213 | 230 | 230 | 230 |
| 70 | 57 | 68 | 81 | 96 | 119 | 146 | 182 | 230 | 230 | 230 |
| 80 | 50 | 59 | 71 | 84 | 104 | 128 | 159 | 208 | 230 | 230 |
| 90 | 45 | 53 | 63 | 75 | 92 | 114 | 142 | 185 | 230 | 230 |
| 100 | 40 | 48 | 57 | 67 | 83 | 102 | 128 | 166 | 220 | 230 |
| 110 | 36 | 43 | 51 | 61 | 75 | 93 | 116 | 151 | 200 | 230 |
| 120 | 33 | 40 | 47 | 56 | 69 | 85 | 106 | 139 | 184 | 230 |
| 130 | 31 | 37 | 44 | 52 | 64 | 79 | 98 | 128 | 170 | 229 |
| 140 | 29 | 34 | 40 | 48 | 59 | 73 | 91 | 119 | 157 | 212 |
| 150 | 27 | 32 | 38 | 45 | 55 | 68 | 85 | 111 | 147 | 198 |
| 160 | 25 | 30 | 35 | 42 | 52 | 64 | 80 | 104 | 138 | 186 |
| 170 | 24 | 28 | 33 | 40 | 49 | 60 | 75 | 98 | 130 | 175 |
| 180 | 22 | 26 | 31 | 37 | 46 | 57 | 71 | 92 | 122 | 165 |
| 190 | 21 | 25 | 30 | 35 | 44 | 54 | 67 | 88 | 116 | 156 |
| 200 | 20 | 24 | 28 | 34 | 41 | 51 | 64 | 83 | 110 | 149 |
| 210 | 19 | 23 | 27 | 32 | 40 | 49 | 61 | 79 | 105 | 141 |
| 220 | 18 | 22 | 26 | 31 | 38 | 46 | 58 | 76 | 100 | 135 |

**MAXIMUM ALLOWABLE SHUTTER WIDTHS PER MULLION HEIGHT ***
3" x 4" END MULLION, SINGLE SPANS

| DESIGN LOADS, PSF | 156" MULLION | 144" MULLION | 132" MULLION | 120" MULLION | 114" MULLION | 108" MULLION | 102" MULLION | 96" MULLION | 90" MULLION | 84" MULLION |
|---|---|---|---|---|---|---|---|---|---|---|
| 40 | 57 | 73 | 80 | 80 | 80 | 80 | 80 | 80 | 80 | 80 |
| 50 | 46 | 58 | 75 | 80 | 80 | 80 | 80 | 80 | 80 | 80 |
| 60 | 38 | 48 | 63 | 80 | 80 | 80 | 80 | 80 | 80 | 80 |
| 70 | 33 | 42 | 54 | 72 | 80 | 80 | 80 | 80 | 80 | 80 |
| 80 | 29 | 36 | 47 | 63 | 73 | 80 | 80 | 80 | 80 | 80 |
| 90 | 25 | 32 | 42 | 56 | 65 | 77 | 80 | 80 | 80 | 80 |
| 100 | 23 | 29 | 38 | 50 | 59 | 69 | 80 | 80 | 80 | 80 |
| 110 | 21 | 26 | 34 | 46 | 53 | 63 | 74 | 80 | 80 | 80 |
| 120 | 19 | 24 | 31 | 42 | 49 | 57 | 68 | 80 | 80 | 80 |
| 130 | 18 | 22 | 29 | 39 | 45 | 53 | 63 | 75 | 80 | 80 |
| 140 | 16 | 21 | 27 | 36 | 42 | 49 | 58 | 70 | 80 | 80 |
| 150 | 15 | 19 | 25 | 33 | 39 | 46 | 55 | 65 | 79 | 80 |
| 160 | 14 | 18 | 24 | 31 | 37 | 43 | 51 | 61 | 74 | 80 |
| 170 | 13 | 17 | 22 | 30 | 34 | 41 | 48 | 58 | 70 | 80 |
| 180 | 13 | 16 | 21 | 28 | 33 | 38 | 45 | 54 | 66 | 80 |
| 190 | 12 | 15 | 20 | 26 | 31 | 36 | 43 | 52 | 63 | 77 |
| 200 | 11 | 15 | 19 | 25 | 29 | 34 | 41 | 49 | 60 | 73 |
| 210 | 11 | 14 | 18 | 24 | 28 | 33 | 39 | 47 | 57 | 70 |
| 220 | 10 | 13 | 17 | 23 | 27 | 31 | 37 | 45 | 54 | 67 |

PRODUCT REVISED
as complying with the Florida
Building Code
Acceptance No 09-0331.09
Expiration Date 11/08/11
By
Miami Dade Product Control
Division


ROLL-A-WAY BY QMI
1661 GLENLAKE AVENUE
ITASCA, IL 60143


COPYRIGHT © 2008
QMI


DRAWING TITLE:
AL2-E 40MM SLAT
PRODUCT APPROVAL


D.L. Fowler
Professional Engineer
Florida License No.
PE0050458

3-24-09

| | |
|---|---|
| DRAWN: | DLF |
| DATE: | 07-07-09 |
| APPROVED: | DF |
| DATE: | 07-28-09 |
| DRAWING NO: | 3-01-036 |
| SIZE: B | REV: |
| SCALE: | 1" = 5" |
| SHEET: | 12 OF 19 |

**MAXIMUM ALLOWABLE SHUTTER WIDTHS PER MULLION HEIGHT ***
3" x 4" CENTER MULLION, TWO SPANS

| DESIGN LOADS, PSF | 144" MULLION | 132" MULLION | 120" MULLION | 108" MULLION | 102" MULLION | 96" MULLION | 90" MULLION | 84" MULLION | 78" MULLION | 72" MULLION |
|---|---|---|---|---|---|---|---|---|---|---|
| 40 | 76 | 98 | 126 | 160 | 160 | 160 | 160 | 160 | 160 | 160 |
| 50 | 61 | 78 | 100 | 138 | 160 | 160 | 160 | 160 | 160 | 160 |
| 60 | 51 | 65 | 84 | 115 | 133 | 157 | 160 | 160 | 160 | 160 |
| 70 | 44 | 56 | 72 | 98 | 114 | 135 | 160 | 160 | 160 | 160 |
| 80 | 38 | 49 | 63 | 86 | 100 | 118 | 143 | 160 | 160 | 160 |
| 90 | 34 | 43 | 56 | 77 | 89 | 105 | 127 | 148 | 160 | 160 |
| 100 | 31 | 39 | 50 | 69 | 80 | 94 | 114 | 133 | 149 | 160 |
| 110 | 28 | 35 | 46 | 63 | 73 | 86 | 104 | 121 | 136 | 153 |
| 120 | 25 | 33 | 42 | 57 | 66 | 78 | 95 | 111 | 125 | 141 |
| 130 | 24 | 30 | 39 | 53 | 61 | 72 | 88 | 103 | 115 | 130 |
| 140 | 22 | 28 | 36 | 49 | 57 | 67 | 82 | 95 | 107 | 120 |
| 150 | 20 | 26 | 33 | 46 | 53 | 63 | 76 | 89 | 100 | 112 |
| 160 | 19 | 24 | 31 | 43 | 50 | 59 | 71 | 83 | 93 | 105 |
| 170 | 18 | 23 | 30 | 41 | 47 | 55 | 67 | 79 | 88 | 99 |
| 180 | 17 | 22 | 28 | 38 | 44 | 52 | 63 | 74 | 83 | 94 |
| 190 | 16 | 21 | 26 | 36 | 42 | 50 | 60 | 70 | 79 | 89 |
| 200 | 15 | 20 | 25 | 34 | 40 | 47 | 57 | 67 | 75 | 84 |
| 210 | 15 | 19 | 24 | 33 | 38 | 45 | 54 | 64 | 71 | 80 |
| 220 | 14 | 18 | 23 | 31 | 36 | 43 | 52 | 61 | 68 | 77 |

**MAXIMUM ALLOWABLE SHUTTER WIDTHS PER MULLION HEIGHT ***
3" x 4" CENTER MULLION, THREE SPANS

| DESIGN LOADS, PSF | 144" MULLION | 132" MULLION | 120" MULLION | 108" MULLION | 102" MULLION | 96" MULLION | 90" MULLION | 84" MULLION | 78" MULLION | 72" MULLION |
|---|---|---|---|---|---|---|---|---|---|---|
| 40 | 95 | 120 | 156 | 207 | 230 | 230 | 230 | 230 | 230 | 230 |
| 50 | 76 | 96 | 125 | 165 | 192 | 226 | 230 | 230 | 230 | 230 |
| 60 | 63 | 80 | 104 | 138 | 160 | 188 | 209 | 230 | 230 | 230 |
| 70 | 54 | 69 | 89 | 118 | 137 | 161 | 179 | 197 | 219 | 230 |
| 80 | 47 | 60 | 78 | 103 | 120 | 141 | 157 | 173 | 192 | 215 |
| 90 | 42 | 53 | 69 | 92 | 107 | 126 | 139 | 154 | 171 | 191 |
| 100 | 38 | 48 | 62 | 83 | 96 | 113 | 125 | 138 | 154 | 172 |
| 110 | 34 | 44 | 57 | 75 | 87 | 103 | 114 | 126 | 140 | 156 |
| 120 | 32 | 40 | 52 | 69 | 80 | 94 | 104 | 115 | 128 | 143 |
| 130 | 29 | 37 | 48 | 64 | 74 | 87 | 96 | 106 | 118 | 132 |
| 140 | 27 | 34 | 45 | 59 | 69 | 81 | 89 | 99 | 110 | 123 |
| 150 | 25 | 32 | 42 | 55 | 64 | 75 | 84 | 92 | 102 | 115 |
| 160 | 24 | 30 | 39 | 52 | 60 | 71 | 78 | 86 | 96 | 107 |
| 170 | 22 | 28 | 37 | 49 | 57 | 66 | 74 | 81 | 90 | 101 |
| 180 | 21 | 27 | 35 | 46 | 53 | 63 | 70 | 77 | 85 | 96 |
| 190 | 20 | 25 | 33 | 44 | 51 | 59 | 66 | 73 | 81 | 91 |
| 200 | 19 | 24 | 31 | 41 | 48 | 56 | 63 | 69 | 77 | 86 |
| 210 | 18 | 23 | 30 | 39 | 46 | 54 | 60 | 66 | 73 | 82 |
| 220 | 17 | 22 | 28 | 38 | 44 | 51 | 57 | 63 | 70 | 78 |

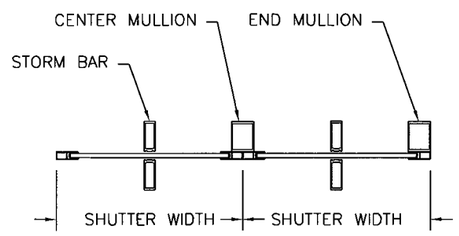


TWO SPANS

*MULLION PERFORMANCE CHARTS ONLY.
SEE PAGES 16 & 17 (2 SPAN), PAGES 18 & 19 (3 SPAN)
FOR ALLOWABLE SHUTTER SIZES.

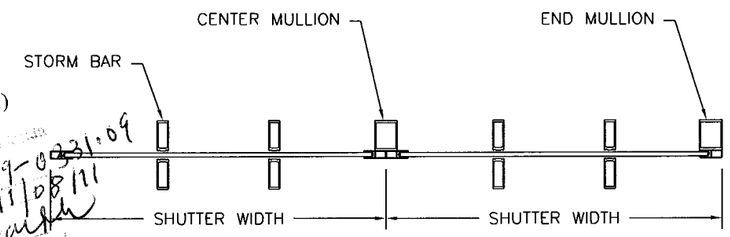


THREE SPANS

**MAXIMUM ALLOWABLE SHUTTER WIDTHS PER MULLION HEIGHT ***
3" x 4" END MULLION, TWO SPANS

| DESIGN LOADS, PSF | 180" MULLION | 168" MULLION | 156" MULLION | 144" MULLION | 132" MULLION | 120" MULLION | 114" MULLION | 108" MULLION | 102" MULLION | 96" MULLION |
|---|---|---|---|---|---|---|---|---|---|---|
| 40 | 82 | 99 | 121 | 152 | 160 | 160 | 160 | 160 | 160 | 160 |
| 50 | 66 | 79 | 97 | 122 | 156 | 160 | 160 | 160 | 160 | 160 |
| 60 | 55 | 66 | 81 | 102 | 130 | 160 | 160 | 160 | 160 | 160 |
| 70 | 47 | 57 | 69 | 87 | 112 | 144 | 160 | 160 | 160 | 160 |
| 80 | 41 | 49 | 61 | 76 | 98 | 126 | 146 | 160 | 160 | 160 |
| 90 | 36 | 44 | 54 | 68 | 87 | 112 | 130 | 151 | 160 | 160 |
| 100 | 33 | 40 | 49 | 61 | 78 | 100 | 117 | 136 | 159 | 160 |
| 110 | 30 | 36 | 44 | 55 | 71 | 91 | 107 | 124 | 144 | 160 |
| 120 | 27 | 33 | 40 | 51 | 65 | 84 | 98 | 113 | 132 | 153 |
| 130 | 25 | 30 | 37 | 47 | 60 | 77 | 90 | 105 | 122 | 141 |
| 140 | 23 | 28 | 35 | 44 | 56 | 72 | 84 | 97 | 114 | 131 |
| 150 | 22 | 26 | 32 | 41 | 52 | 67 | 78 | 91 | 106 | 122 |
| 160 | 20 | 25 | 30 | 38 | 49 | 63 | 73 | 85 | 99 | 114 |
| 170 | 19 | 23 | 29 | 36 | 46 | 59 | 69 | 80 | 93 | 107 |
| 180 | 18 | 22 | 27 | 34 | 43 | 56 | 65 | 76 | 88 | 100 |
| 190 | 17 | 21 | 26 | 32 | 41 | 53 | 62 | 72 | 84 | 95 |
| 200 | 16 | 20 | 24 | 30 | 39 | 50 | 59 | 68 | 79 | 90 |
| 210 | 16 | 19 | 23 | 29 | 37 | 48 | 56 | 65 | 76 | 85 |
| 220 | 15 | 18 | 22 | 28 | 35 | 46 | 53 | 62 | 72 | 81 |

**MAXIMUM ALLOWABLE SHUTTER WIDTHS PER MULLION HEIGHT ***
3" x 4" END MULLION, THREE SPANS

| DESIGN LOADS, PSF | 180" MULLION | 168" MULLION | 156" MULLION | 144" MULLION | 132" MULLION | 120" MULLION | 114" MULLION | 108" MULLION | 102" MULLION | 96" MULLION |
|---|---|---|---|---|---|---|---|---|---|---|
| 40 | 103 | 124 | 152 | 189 | 230 | 230 | 230 | 230 | 230 | 230 |
| 50 | 82 | 99 | 121 | 151 | 192 | 230 | 230 | 230 | 230 | 230 |
| 60 | 69 | 83 | 101 | 126 | 160 | 207 | 230 | 230 | 230 | 230 |
| 70 | 59 | 71 | 87 | 108 | 137 | 177 | 202 | 230 | 230 | 230 |
| 80 | 51 | 62 | 76 | 95 | 120 | 155 | 177 | 208 | 230 | 230 |
| 90 | 46 | 55 | 67 | 84 | 106 | 138 | 157 | 185 | 212 | 230 |
| 100 | 41 | 50 | 61 | 76 | 96 | 124 | 141 | 166 | 191 | 225 |
| 110 | 37 | 45 | 55 | 69 | 87 | 113 | 128 | 151 | 174 | 205 |
| 120 | 34 | 41 | 51 | 63 | 80 | 103 | 118 | 138 | 159 | 188 |
| 130 | 32 | 38 | 47 | 58 | 74 | 96 | 109 | 128 | 147 | 173 |
| 140 | 29 | 35 | 43 | 54 | 68 | 89 | 101 | 119 | 136 | 161 |
| 150 | 27 | 33 | 40 | 50 | 64 | 83 | 94 | 111 | 127 | 150 |
| 160 | 26 | 31 | 38 | 47 | 60 | 78 | 88 | 104 | 119 | 141 |
| 170 | 24 | 29 | 36 | 45 | 56 | 73 | 83 | 98 | 112 | 132 |
| 180 | 23 | 28 | 34 | 42 | 53 | 69 | 78 | 92 | 106 | 125 |
| 190 | 22 | 26 | 32 | 40 | 50 | 65 | 74 | 87 | 101 | 119 |
| 200 | 21 | 25 | 30 | 38 | 48 | 62 | 71 | 83 | 96 | 113 |
| 210 | 20 | 24 | 29 | 36 | 46 | 59 | 67 | 79 | 91 | 107 |
| 220 | 19 | 23 | 28 | 34 | 44 | 56 | 64 | 75 | 87 | 102 |


ROLL-A-WAY BY QMI
1661 GLENLAKE AVENUE
ITASCA, IL 60143


COPYRIGHT © 2008
QMI


DRAWING TITLE:
AL2-E 40MM SLAT
PRODUCT APPROVAL


D.L. Fowler
Professional Engineer
Florida License No.
PE0050458


3-24-09

| | |
|---|---|
| DRAWN: | DLF |
| DATE: | 07-07-09 |
| APPROVED: | DF |
| DATE: | 07-28-09 |
| DRAWING NO: | 3-01-036 |
| SIZE: B | REV: |
| SCALE: | 1" = 5" |
| SHEET: | 13 OF 19 |

**MAXIMUM ALLOWABLE SHUTTER WIDTHS PER MULLION HEIGHT ***
3" x 6" CENTER MULLION, SINGLE SPANS

| DESIGN LOADS, PSF | 168" MULLION | 156" MULLION | 144" MULLION | 132" MULLION | 120" MULLION | 108" MULLION | 102" MULLION | 96" MULLION | 90" MULLION | 84" MULLION |
|---|---|---|---|---|---|---|---|---|---|---|
| 40 | 52 | 65 | 80 | 80 | 80 | 80 | 80 | 80 | 80 | 80 |
| 50 | 42 | 52 | 66 | 80 | 80 | 80 | 80 | 80 | 80 | 80 |
| 60 | 35 | 43 | 55 | 71 | 80 | 80 | 80 | 80 | 80 | 80 |
| 70 | 30 | 37 | 47 | 61 | 80 | 80 | 80 | 80 | 80 | 80 |
| 80 | 26 | 32 | 41 | 54 | 71 | 80 | 80 | 80 | 80 | 80 |
| 90 | 23 | 29 | 37 | 48 | 63 | 80 | 80 | 80 | 80 | 80 |
| 100 | 21 | 26 | 33 | 43 | 57 | 78 | 80 | 80 | 80 | 80 |
| 110 | 19 | 24 | 30 | 39 | 52 | 71 | 80 | 80 | 80 | 80 |
| 120 | 17 | 22 | 27 | 36 | 47 | 65 | 77 | 80 | 80 | 80 |
| 130 | 16 | 20 | 25 | 33 | 44 | 60 | 71 | 80 | 80 | 80 |
| 140 | 15 | 19 | 24 | 31 | 41 | 56 | 66 | 80 | 80 | 80 |
| 150 | 14 | 17 | 22 | 29 | 38 | 52 | 62 | 74 | 80 | 80 |
| 160 | 13 | 16 | 21 | 27 | 36 | 49 | 58 | 70 | 80 | 80 |
| 170 | 12 | 15 | 19 | 25 | 34 | 46 | 55 | 65 | 79 | 80 |
| 180 | 12 | 14 | 18 | 24 | 32 | 43 | 52 | 62 | 75 | 80 |
| 190 | 11 | 14 | 17 | 23 | 30 | 41 | 49 | 59 | 71 | 80 |
| 200 | 10 | 13 | 16 | 21 | 28 | 39 | 46 | 56 | 68 | 80 |
| 210 | 10 | 12 | 16 | 20 | 27 | 37 | 44 | 53 | 64 | 79 |
| 220 | 9 | 12 | 15 | 19 | 26 | 36 | 42 | 51 | 61 | 76 |

**MAXIMUM ALLOWABLE SHUTTER WIDTHS PER MULLION HEIGHT ***
3" x 6" CENTER MULLION, TWO SPANS

| DESIGN LOADS, PSF | 228" MULLION | 216" MULLION | 204" MULLION | 192" MULLION | 180" MULLION | 168" MULLION | 156" MULLION | 144" MULLION | 132" MULLION | 120" MULLION |
|---|---|---|---|---|---|---|---|---|---|---|
| 40 | 47 | 55 | 65 | 77 | 93 | 112 | 138 | 160 | 160 | 160 |
| 50 | 38 | 44 | 52 | 61 | 74 | 90 | 111 | 139 | 160 | 160 |
| 60 | 31 | 37 | 43 | 51 | 62 | 75 | 92 | 116 | 136 | 156 |
| 70 | 27 | 32 | 37 | 44 | 53 | 64 | 79 | 99 | 116 | 134 |
| 80 | 24 | 28 | 32 | 38 | 46 | 56 | 69 | 87 | 102 | 117 |
| 90 | 21 | 25 | 29 | 34 | 41 | 50 | 61 | 77 | 90 | 104 |
| 100 | 19 | 22 | 26 | 31 | 37 | 45 | 55 | 69 | 81 | 94 |
| 110 | 17 | 20 | 24 | 28 | 34 | 41 | 50 | 63 | 74 | 85 |
| 120 | 16 | 18 | 22 | 26 | 31 | 37 | 46 | 58 | 68 | 78 |
| 130 | 14 | 17 | 20 | 24 | 28 | 35 | 43 | 53 | 63 | 72 |
| 140 | 13 | 16 | 19 | 22 | 26 | 32 | 40 | 50 | 58 | 67 |
| 150 | 13 | 15 | 17 | 20 | 25 | 30 | 37 | 46 | 54 | 62 |
| 160 | 12 | 14 | 16 | 19 | 23 | 28 | 35 | 43 | 51 | 59 |
| 170 | 11 | 13 | 15 | 18 | 22 | 26 | 33 | 41 | 48 | 55 |
| 180 | 10 | 12 | 14 | 17 | 21 | 25 | 31 | 39 | 45 | 52 |
| 190 | 10 | 12 | 14 | 16 | 19 | 24 | 29 | 37 | 43 | 49 |
| 200 | 9 | 11 | 13 | 15 | 19 | 22 | 28 | 35 | 41 | 47 |
| 210 | 9 | 11 | 12 | 15 | 18 | 21 | 26 | 33 | 39 | 45 |
| 220 | 9 | 10 | 12 | 14 | 17 | 20 | 25 | 32 | 37 | 43 |

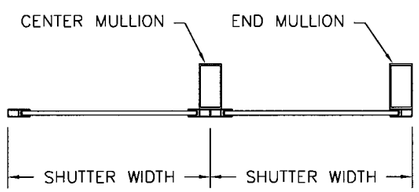


SINGLE SPANS

*MULLION PERFORMANCE CHARTS ONLY.
SEE PAGE 1(1SPAN) AND PAGES 16 & 17 (2 SPAN)
FOR ALLOWABLE SHUTTER SIZES.

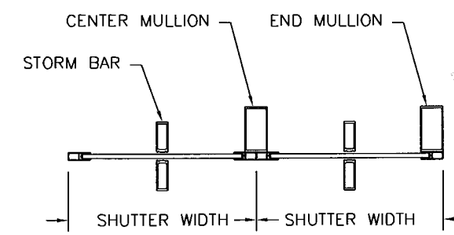


TWO SPANS

**MAXIMUM ALLOWABLE SHUTTER WIDTHS PER MULLION HEIGHT ***
3" x 6" END MULLION, SINGLE SPANS

| DESIGN LOADS, PSF | 216" MULLION | 204" MULLION | 192" MULLION | 180" MULLION | 168" MULLION | 156" MULLION | 144" MULLION | 132" MULLION | 120" MULLION | 108" MULLION |
|---|---|---|---|---|---|---|---|---|---|---|
| 40 | 49 | 58 | 69 | 80 | 80 | 80 | 80 | 80 | 80 | 80 |
| 50 | 39 | 46 | 55 | 67 | 80 | 80 | 80 | 80 | 80 | 80 |
| 60 | 32 | 38 | 46 | 56 | 69 | 80 | 80 | 80 | 80 | 80 |
| 70 | 28 | 33 | 40 | 48 | 59 | 74 | 80 | 80 | 80 | 80 |
| 80 | 24 | 29 | 35 | 42 | 52 | 64 | 80 | 80 | 80 | 80 |
| 90 | 22 | 26 | 31 | 37 | 46 | 57 | 73 | 80 | 80 | 80 |
| 100 | 19 | 23 | 28 | 34 | 41 | 52 | 66 | 80 | 80 | 80 |
| 110 | 18 | 21 | 25 | 31 | 38 | 47 | 60 | 77 | 80 | 80 |
| 120 | 16 | 19 | 23 | 28 | 34 | 43 | 55 | 71 | 80 | 80 |
| 130 | 15 | 18 | 21 | 26 | 32 | 40 | 50 | 66 | 80 | 80 |
| 140 | 14 | 16 | 20 | 24 | 30 | 37 | 47 | 61 | 80 | 80 |
| 150 | 13 | 15 | 18 | 22 | 28 | 34 | 44 | 57 | 76 | 80 |
| 160 | 12 | 14 | 17 | 21 | 26 | 32 | 41 | 53 | 71 | 80 |
| 170 | 11 | 14 | 16 | 20 | 24 | 30 | 39 | 50 | 67 | 80 |
| 180 | 11 | 13 | 15 | 19 | 23 | 29 | 36 | 47 | 63 | 80 |
| 190 | 10 | 12 | 15 | 18 | 22 | 27 | 35 | 45 | 60 | 80 |
| 200 | 10 | 12 | 14 | 17 | 21 | 26 | 33 | 43 | 57 | 78 |
| 210 | 9 | 11 | 13 | 16 | 20 | 25 | 31 | 41 | 54 | 74 |
| 220 | 9 | 10 | 13 | 15 | 19 | 23 | 30 | 39 | 52 | 71 |

**MAXIMUM ALLOWABLE SHUTTER WIDTHS PER MULLION HEIGHT ***
3" x 6" END MULLION, TWO SPANS

| DESIGN LOADS, PSF | 180" MULLION | 168" MULLION | 156" MULLION | 144" MULLION | 132" MULLION | 120" MULLION | 114" MULLION | 108" MULLION | 102" MULLION | 96" MULLION |
|---|---|---|---|---|---|---|---|---|---|---|
| 40 | 160 | 160 | 160 | 160 | 160 | 160 | 160 | 160 | 160 | 160 |
| 50 | 149 | 160 | 160 | 160 | 160 | 160 | 160 | 160 | 160 | 160 |
| 60 | 124 | 150 | 160 | 160 | 160 | 160 | 160 | 160 | 160 | 160 |
| 70 | 106 | 128 | 157 | 160 | 160 | 160 | 160 | 160 | 160 | 160 |
| 80 | 93 | 112 | 138 | 160 | 160 | 160 | 160 | 160 | 160 | 160 |
| 90 | 83 | 100 | 122 | 154 | 160 | 160 | 160 | 160 | 160 | 160 |
| 100 | 74 | 90 | 110 | 138 | 160 | 160 | 160 | 160 | 160 | 160 |
| 110 | 68 | 82 | 100 | 126 | 148 | 160 | 160 | 160 | 160 | 160 |
| 120 | 62 | 75 | 92 | 115 | 136 | 156 | 160 | 160 | 160 | 155 |
| 130 | 57 | 69 | 85 | 106 | 125 | 144 | 155 | 160 | 160 | 155 |
| 140 | 53 | 64 | 79 | 99 | 116 | 134 | 144 | 156 | 160 | 155 |
| 150 | 50 | 60 | 73 | 92 | 108 | 125 | 135 | 146 | 159 | 155 |
| 160 | 46 | 56 | 69 | 86 | 102 | 117 | 126 | 137 | 149 | 155 |
| 170 | 44 | 53 | 65 | 81 | 96 | 110 | 119 | 129 | 140 | 153 |
| 180 | 41 | 50 | 61 | 77 | 90 | 104 | 112 | 122 | 132 | 144 |
| 190 | 39 | 47 | 58 | 73 | 86 | 99 | 106 | 115 | 125 | 137 |
| 200 | 37 | 45 | 55 | 69 | 81 | 94 | 101 | 109 | 119 | 130 |
| 210 | 35 | 43 | 52 | 66 | 77 | 89 | 96 | 104 | 113 | 124 |
| 220 | 34 | 41 | 50 | 63 | 74 | 85 | 92 | 99 | 108 | 118 |


ROLL-A-WAY BY QMI
1661 GLENLAKE AVENUE
ITASCA, IL 60143


COPYRIGHT © 2008
QMI


DRAWING TITLE:
AL2-E 40MM SLAT
PRODUCT APPROVAL

09-0331-09
11/08/11
Mark Auer
Manager
Division

D.L. Fowler
Professional Engineer
Florida License No.
PE0050458

| | |
|---|---|
| DRAWN: | DLF |
| DATE: | 07-07-09 |
| APPROVED: | DF |
| DATE: | 07-28-09 |
| DRAWING NO: | 3-01-036 |
| SIZE: B | REV: |
| SCALE: | 1" = 5" |
| SHEET: | 14 OF 19 |

**MAXIMUM ALLOWABLE SHUTTER WIDTHS PER MULLION HEIGHT ***
3" x 6" CENTER MULLION, THREE SPANS

| DESIGN LOADS, PSF | 180" MULLION | 168" MULLION | 156" MULLION | 144" MULLION | 132" MULLION | 120" MULLION | 114" MULLION | 108" MULLION | 102" MULLION | 96" MULLION |
|---|---|---|---|---|---|---|---|---|---|---|
| 40 | 117 | 141 | 167 | 186 | 210 | 230 | 230 | 230 | 230 | 230 |
| 50 | 93 | 113 | 133 | 149 | 168 | 192 | 206 | 222 | 230 | 230 |
| 60 | 78 | 94 | 111 | 124 | 140 | 160 | 171 | 185 | 200 | 217 |
| 70 | 67 | 81 | 95 | 106 | 120 | 137 | 147 | 158 | 171 | 186 |
| 80 | 58 | 71 | 83 | 93 | 105 | 120 | 129 | 138 | 150 | 162 |
| 90 | 52 | 63 | 74 | 83 | 93 | 107 | 114 | 123 | 133 | 144 |
| 100 | 47 | 57 | 67 | 75 | 84 | 96 | 103 | 111 | 120 | 130 |
| 110 | 42 | 51 | 61 | 68 | 76 | 87 | 94 | 101 | 109 | 118 |
| 120 | 39 | 47 | 56 | 62 | 70 | 80 | 86 | 92 | 100 | 108 |
| 130 | 36 | 43 | 51 | 57 | 65 | 74 | 79 | 85 | 92 | 100 |
| 140 | 33 | 40 | 48 | 53 | 60 | 69 | 73 | 79 | 86 | 93 |
| 150 | 31 | 38 | 44 | 50 | 56 | 64 | 69 | 74 | 80 | 87 |
| 160 | 29 | 35 | 42 | 47 | 53 | 60 | 64 | 69 | 75 | 81 |
| 170 | 27 | 33 | 39 | 44 | 49 | 56 | 61 | 65 | 70 | 76 |
| 180 | 26 | 31 | 37 | 41 | 47 | 53 | 57 | 62 | 67 | 72 |
| 190 | 25 | 30 | 35 | 39 | 44 | 50 | 54 | 58 | 63 | 68 |
| 200 | 23 | 28 | 33 | 37 | 42 | 48 | 51 | 55 | 60 | 65 |
| 210 | 22 | 27 | 32 | 35 | 40 | 46 | 49 | 53 | 57 | 62 |
| 220 | 21 | 26 | 30 | 34 | 38 | 44 | 47 | 50 | 54 | 59 |

*MULLION PERFORMANCE CHARTS ONLY.
SEE PAGES 18 & 19 FOR ALLOWABLE
3 SPAN SHUTTER SIZES.

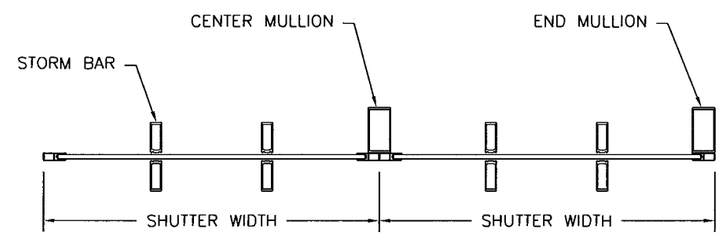


THREE SPANS

**MAXIMUM ALLOWABLE SHUTTER WIDTHS PER MULLION HEIGHT ***
3" x 6" END MULLION, THREE SPANS

| DESIGN LOADS, PSF | 228" MULLION | 216" MULLION | 204" MULLION | 192" MULLION | 180" MULLION | 168" MULLION | 156" MULLION | 144" MULLION | 132" MULLION | 120" MULLION |
|---|---|---|---|---|---|---|---|---|---|---|
| 40 | 121 | 141 | 165 | 194 | 230 | 230 | 230 | 230 | 230 | 230 |
| 50 | 97 | 113 | 132 | 155 | 187 | 226 | 230 | 230 | 230 | 230 |
| 60 | 81 | 94 | 110 | 129 | 156 | 188 | 222 | 230 | 230 | 230 |
| 70 | 69 | 81 | 94 | 111 | 133 | 162 | 190 | 213 | 230 | 230 |
| 80 | 60 | 70 | 82 | 97 | 117 | 141 | 167 | 186 | 210 | 230 |
| 90 | 54 | 63 | 73 | 86 | 104 | 126 | 148 | 166 | 187 | 213 |
| 100 | 48 | 56 | 66 | 78 | 93 | 113 | 133 | 149 | 168 | 192 |
| 110 | 44 | 51 | 60 | 71 | 85 | 103 | 121 | 135 | 153 | 174 |
| 120 | 40 | 47 | 55 | 65 | 78 | 94 | 111 | 124 | 140 | 160 |
| 130 | 37 | 43 | 51 | 60 | 72 | 87 | 102 | 115 | 129 | 148 |
| 140 | 35 | 40 | 47 | 55 | 67 | 81 | 95 | 106 | 120 | 137 |
| 150 | 32 | 38 | 44 | 52 | 62 | 75 | 89 | 99 | 112 | 128 |
| 160 | 30 | 35 | 41 | 49 | 58 | 71 | 83 | 93 | 105 | 120 |
| 170 | 28 | 33 | 39 | 46 | 55 | 67 | 78 | 88 | 99 | 113 |
| 180 | 27 | 31 | 37 | 43 | 52 | 63 | 74 | 83 | 93 | 107 |
| 190 | 25 | 30 | 35 | 41 | 49 | 60 | 70 | 78 | 89 | 101 |
| 200 | 24 | 28 | 33 | 39 | 47 | 57 | 67 | 75 | 84 | 96 |
| 210 | 23 | 27 | 31 | 37 | 44 | 54 | 63 | 71 | 80 | 91 |
| 220 | 22 | 26 | 30 | 35 | 42 | 51 | 61 | 68 | 76 | 87 |

09-0331.09
11/28/11
By Miami Dade Product Control Division


ROLL-A-WAY BY QMI
1661 GLENLAKE AVENUE
ITASCA, IL 60143


COPYRIGHT © 2008
QMI


DRAWING TITLE:
AL2-E 40MM SLAT
PRODUCT APPROVAL

D.L. Fowler
Professional Engineer
Florida License No.
PE0050458
3-24-09

| | |
|---|---|
| DRAWN: | DLF |
| DATE: | 07-02-09 |
| APPROVED: | DF |
| DATE: | 07-28-09 |
| DRAWING NO: | 3-01-036 |
| SIZE: B | REV: |
| SCALE: | 1" = 5" |
| SHEET: | 15 OF 19 |

# APPLICATION CHARTS FOR TWO SPAN SHUTTERS (MAX. LIMITS)

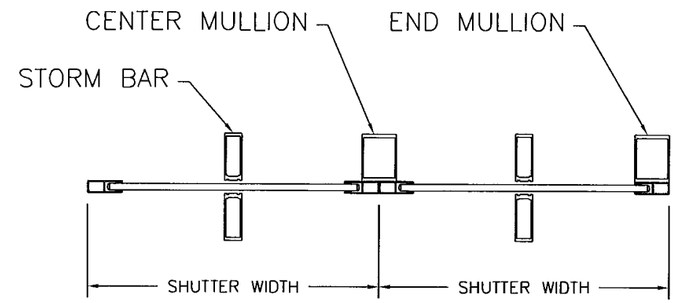


TWO SPANS

**HEADER #1, TWO SPANS**
MAXIMUM ALLOWABLE UNIT HEIGHTS, FOR GIVEN PRESSURE & UNIT WIDTH, PER TOTAL SYSTEM DEFLECTION LESS THAN 2"

| DESIGN PRESSURE PSF | 40" UNIT WIDTH | | | | 60" UNIT WIDTH | | | | 80" UNIT WIDTH | | | | 100" UNIT WIDTH | | | | 120" UNIT WIDTH | | | | 140" UNIT WIDTH | | | | 160" UNIT WIDTH | | | | MAXIMUM UNIT WIDTH |
|---|---|---|---|---|---|---|---|---|---|---|---|---|---|---|---|---|---|---|---|---|---|---|---|---|---|---|---|---|---|
| | SB #1 | SB #2 | SB #3 | SB #4 | SB #1 | SB #2 | SB #3 | SB #4 | SB #1 | SB #2 | SB #3 | SB #4 | SB #1 | SB #2 | SB #3 | SB #4 | SB #1 | SB #2 | SB #3 | SB #4 | SB #1 | SB #2 | SB #3 | SB #4 | SB #1 | SB #2 | SB #3 | SB #4 | |
| 30 | 136.7 | 159.2 | 192.4 | 215.2 | 115.5 | 140.9 | 170.2 | 190.2 | 98.7 | 128.3 | 154.4 | 172.2 | 87.5 | 116.9 | 129.5 | 129.5 | 79.5 | 88.7 | 88.7 | 88.7 | 64.5 | 64.5 | 64.5 | 64.5 | 49.0 | 49.0 | 49.0 | 49.0 | 178 |
| 35 | 131.5 | 153.2 | 185.0 | 207.0 | 106.9 | 135.5 | 163.3 | 182.8 | 91.3 | 123.1 | 147.9 | 165.2 | 81.1 | 111.1 | 111.1 | 111.1 | 73.5 | 76.1 | 76.1 | 76.1 | 55.3 | 55.3 | 55.3 | 55.2 | 42.0 | 42.0 | 42.0 | 42.0 | 169 |
| 40 | 126.1 | 148.1 | 179.0 | 200.2 | 100.1 | 130.9 | 158.0 | 176.6 | 85.5 | 118.7 | 142.7 | 155.0 | 75.7 | 97.1 | 97.1 | 97.1 | 66.5 | 66.5 | 66.5 | 66.5 | 48.4 | 48.4 | 48.4 | 48.4 | 36.7 | 36.7 | 36.7 | 36.7 | 162 |
| 45 | 118.9 | 143.7 | 173.8 | 194.4 | 94.3 | 126.9 | 153.4 | 171.4 | 80.5 | 112.3 | 137.7 | 137.7 | 71.5 | 86.3 | 86.3 | 86.3 | 59.1 | 59.1 | 59.1 | 59.1 | 43.0 | 43.0 | 43.0 | 43.0 | 32.7* | 32.7* | 32.7* | 32.7* | 156 |
| 50 | 112.7 | 139.9 | 169.2 | 189.2 | 89.5 | 123.5 | 149.1 | 166.6 | 76.5 | 106.5 | 123.9 | 123.9 | 67.7 | 77.7 | 77.7 | 77.7 | 53.3 | 53.3 | 53.3 | 53.2 | 38.6 | 38.6 | 38.6 | 38.6 | 29.5* | 29.5* | 29.5* | 29.5* | 150.9 |
| 55 | 107.5 | 136.7 | 165.2 | 184.8 | 85.3 | 118.9 | 145.5 | 162.6 | 72.9 | 101.5 | 112.7 | 112.7 | 64.7 | 70.7 | 70.7 | 70.7 | 48.3 | 48.2 | 48.2 | 48.2 | 35.1 | 35.1 | 35.1 | 35.1 | 26.7* | 26.7* | 26.7* | 26.7* | 146 |
| 60 | 102.9 | 133.7 | 161.6 | 180.8 | 81.7 | 113.9 | 142.1 | 159.0 | 69.7 | 97.1 | 103.3 | 103.3 | 61.9 | 64.7 | 64.7 | 64.7 | 44.2 | 44.2 | 44.2 | 44.2 | 32.3 | 32.3 | 32.3 | 32.3 | 24.5* | 24.5* | 24.5* | 24.5* | 142 |
| 70 | 95.3 | 128.5 | 155.4 | 173.8 | 75.5 | 105.3 | 131.9 | 152.6 | 64.5 | 88.5 | 88.5 | 88.5 | 55.5 | 55.5 | 55.5 | 55.5 | 37.9 | 37.9 | 37.9 | 37.9 | 27.7* | 27.7* | 27.7* | 27.7* | ** | ** | ** | ** | 135 |
| 80 | 89.1 | 124.3 | 150.2 | 168.2 | 70.7 | 98.5 | 123.3 | 142.5 | 60.3 | 77.5 | 77.5 | 77.5 | 48.5 | 48.5 | 48.4 | 48.4 | 33.3 | 33.3 | 33.3 | 33.3 | 24.1* | 24.1* | 24.1* | 24.1* | ** | ** | ** | ** | 129.7 |
| 90 | 84.1 | 117.1 | 145.7 | 163.2 | 66.7 | 92.9 | 116.3 | 126.5 | 56.9 | 68.7 | 68.7 | 68.7 | 43.1 | 43.0 | 43.0 | 43.0 | 29.5 | 29.5 | 29.5 | 29.5 | 21.5* | 21.5* | 21.5* | 21.5* | ** | ** | ** | ** | 125 |
| 100 | 79.7 | 111.1 | 139.1 | 158.8 | 63.3 | 88.1 | 110.3 | 113.9 | 53.9 | 61.9 | 61.9 | 61.9 | 38.8 | 38.8 | 38.8 | 38.8 | 26.5 | 26.5 | 26.5 | 26.5 | ** | ** | ** | ** | ** | ** | ** | ** | 120.8 |
| 110 | 75.9 | 105.9 | 132.5 | 155.0 | 60.3 | 84.1 | 103.5 | 103.5 | 51.5 | 56.3 | 56.3 | 56.3 | 35.3 | 35.3 | 35.3 | 35.3 | 24.1* | 24.1* | 24.1* | 24.1* | ** | ** | ** | ** | ** | ** | ** | ** | 117.2 |
| 120 | 72.7 | 101.5 | 126.9 | 151.6 | 57.7 | 80.5 | 94.9 | 94.9 | 49.3 | 51.5 | 51.5 | 51.5 | 32.3 | 32.3 | 32.3 | 32.3 | 22.1* | 22.1* | 22.1* | 22.1* | ** | ** | ** | ** | ** | ** | ** | ** | 114 |

**HEADER #2, TWO SPANS**
MAXIMUM ALLOWABLE UNIT HEIGHTS, FOR GIVEN PRESSURE & UNIT WIDTH, PER TOTAL SYSTEM DEFLECTION LESS THAN 2"

| DESIGN PRESSURE PSF | 40" UNIT WIDTH | | | | 60" UNIT WIDTH | | | | 80" UNIT WIDTH | | | | 100" UNIT WIDTH | | | | 120" UNIT WIDTH | | | | 140" UNIT WIDTH | | | | 160" UNIT WIDTH | | | | MAXIMUM UNIT WIDTH |
|---|---|---|---|---|---|---|---|---|---|---|---|---|---|---|---|---|---|---|---|---|---|---|---|---|---|---|---|---|---|
| | SB #1 | SB #2 | SB #3 | SB #4 | SB #1 | SB #2 | SB #3 | SB #4 | SB #1 | SB #2 | SB #3 | SB #4 | SB #1 | SB #2 | SB #3 | SB #4 | SB #1 | SB #2 | SB #3 | SB #4 | SB #1 | SB #2 | SB #3 | SB #4 | SB #1 | SB #2 | SB #3 | SB #4 | |
| 30 | 136.9 | 159.4 | 192.6 | 215.6 | 115.5 | 141.7 | 171.2 | 191.6 | 98.7 | 130.3 | 157.4 | 176.0 | 87.5 | 121.7 | 146.7 | 163.8 | 79.5 | 110.7 | 137.1 | 152.8 | 73.3 | 102.1 | 127.5 | 135.3 | 68.2 | 95.3 | 102.99 | 102.8 | 178 |
| 35 | 131.7 | 153.4 | 185.4 | 207.4 | 106.9 | 136.3 | 164.8 | 184.2 | 91.3 | 125.3 | 151.4 | 169.2 | 81.1 | 112.9 | 140.7 | 157.2 | 73.5 | 102.5 | 128.3 | 143.1 | 67.8 | 94.5 | 115.99 | 115.9 | 63.2 | 88.1 | 88.0 | 88.0 | 169 |
| 40 | 126.1 | 148.1 | 179.2 | 200.6 | 100.1 | 131.7 | 159.2 | 178.2 | 85.5 | 119.1 | 146.1 | 163.6 | 75.7 | 105.7 | 132.3 | 151.8 | 68.9 | 95.9 | 120.1 | 139.3 | 63.4 | 88.5 | 101.5 | 101.5 | 59.0 | 77.0 | 77.0 | 77.0 | 162 |
| 45 | 118.9 | 143.9 | 174.0 | 194.8 | 94.3 | 127.9 | 154.6 | 173.0 | 80.5 | 112.3 | 140.5 | 158.6 | 71.5 | 99.5 | 124.7 | 146.9 | 64.9 | 90.5 | 113.1 | 123.9 | 59.8 | 83.3 | 90.0 | 90.0 | 55.8* | 68.4* | 68.4* | 68.4* | 156 |
| 50 | 112.7 | 140.1 | 169.4 | 189.6 | 89.5 | 124.5 | 150.6 | 168.4 | 76.5 | 106.5 | 133.3 | 154.4 | 67.7 | 94.5 | 118.3 | 142.7 | 61.4 | 85.7 | 107.3 | 111.5 | 56.6 | 79.1 | 81.0 | 81.0 | 52.8* | 61.6* | 61.6* | 61.6* | 150.9 |
| 55 | 107.5 | 136.9 | 165.4 | 185.2 | 85.3 | 118.9 | 146.9 | 164.4 | 72.9 | 101.5 | 127.1 | 150.6 | 64.7 | 90.1 | 112.7 | 139.1 | 58.6 | 81.7 | 101.3 | 101.3 | 54.0 | 73.6 | 73.6 | 73.6 | 50.4* | 56.0* | 56.0* | 56.0* | 146 |
| 60 | 102.9 | 133.9 | 162.0 | 181.2 | 81.7 | 113.9 | 142.5 | 160.8 | 69.7 | 97.1 | 121.7 | 147.1 | 61.9 | 86.3 | 107.9 | 135.5 | 56.0 | 78.3 | 92.9 | 92.9 | 51.8 | 67.4 | 67.4 | 67.4 | 48.2* | 51.2* | 51.2* | 51.2* | 142 |
| 70 | 95.3 | 128.7 | 155.8 | 174.4 | 75.5 | 105.3 | 131.9 | 154.6 | 64.5 | 89.9 | 112.7 | 141.3 | 57.3 | 79.9 | 99.9 | 116.3 | 51.8 | 72.5 | 79.6 | 79.6 | 47.8* | 57.8* | 57.8* | 57.8* | ** | ** | ** | ** | 135 |
| 80 | 89.1 | 124.3 | 150.6 | 168.6 | 70.7 | 98.5 | 123.3 | 149.3 | 60.3 | 84.1 | 105.3 | 134.7 | 53.4 | 74.7 | 93.5 | 101.7 | 48.6 | 67.6 | 69.6 | 69.6 | 44.8* | 50.6* | 50.6* | 50.6* | ** | ** | ** | ** | 129.7 |
| 90 | 84.1 | 117.1 | 146.1 | 163.6 | 66.7 | 92.9 | 116.3 | 144.9 | 56.9 | 79.3 | 99.3 | 127.1 | 50.4 | 70.3 | 88.1 | 90.3 | 45.8 | 61.8 | 61.8 | 61.8 | 42.2* | 45.0* | 45.0* | 45.0* | ** | ** | ** | ** | 125 |
| 100 | 79.7 | 111.1 | 139.1 | 159.4 | 63.3 | 88.1 | 110.3 | 141.1 | 53.9 | 75.3 | 94.3 | 120.5 | 47.8 | 66.7 | 81.3 | 81.3 | 43.4 | 55.6 | 55.6 | 55.6 | ** | ** | ** | ** | ** | ** | ** | ** | 120.8 |
| 110 | 75.9 | 105.9 | 132.5 | 155.6 | 60.3 | 84.1 | 105.1 | 134.5 | 51.5 | 71.7 | 89.9 | 114.9 | 45.6 | 63.7 | 73.9 | 73.8 | 41.4* | 50.6* | 50.6* | 50.6* | ** | ** | ** | ** | ** | ** | ** | ** | 117.2 |
| 120 | 72.7 | 101.5 | 126.9 | 152.2 | 57.7 | 80.5 | 100.7 | 128.7 | 49.3 | 68.7 | 86.1 | 108.1 | 43.6 | 60.8 | 67.6 | 67.6 | 39.6* | 46.2* | 46.2* | 46.2* | ** | ** | ** | ** | ** | ** | ** | ** | 114 |

* FOR INTERPOLATION ONLY (MAXIMUM WIDTH GOVERNS) ** = NOT USABLE

NOTES: "SB" = STORM BAR, SB #1 = 3", SB #2 = 3" WITH INSERT, SB #3 = 4", & SB #4 = 4" WITH INSERT


ROLL-A-WAY BY QMI
1661 GLENLAKE AVENUE
ITASCA, IL 60143


COPYRIGHT © 2008
QMI


DRAWING TITLE: AL2-E 40MM SLAT PRODUCT APPROVAL

09-0331.09
11/08/11
Missouri Dept. Product Control

D.L. Fowler
Professional Engineer
Florida License No.
PE0050458
3-26-09

| | |
|---|---|
| DRAWN: | DLF |
| DATE: | 07-07-09 |
| APPROVED: | DF |
| DATE: | 07-28-09 |
| DRAWING NO: | 3-01-036 |
| SIZE: B | REV: |
| SCALE: | 1" = 10" |
| SHEET: | 16 OF 19 |

# APPLICATION CHART FOR TWO SPAN SHUTTERS (MAX. LIMITS)

**HEADER #3, TWO SPANS**

MAXIMUM ALLOWABLE UNIT HEIGHTS, FOR GIVEN PRESSURE & UNIT WIDTH, PER TOTAL SYSTEM DEFLECTION LESS THAN 2"

| DESIGN PRESSURE PSF | 40" UNIT WIDTH | | | | 60" UNIT WIDTH | | | | 80" UNIT WIDTH | | | | 100" UNIT WIDTH | | | | 120" UNIT WIDTH | | | | 140" UNIT WIDTH | | | | 160" UNIT WIDTH | | | | 180" UNIT WIDTH | | | | MAXIMUM UNIT WIDTH |
|---|---|---|---|---|---|---|---|---|---|---|---|---|---|---|---|---|---|---|---|---|---|---|---|---|---|---|---|---|---|---|---|---|---|
| | SB #1 | SB #2 | SB #3 | SB #4 | SB #1 | SB #2 | SB #3 | SB #4 | SB #1 | SB #2 | SB #3 | SB #4 | SB #1 | SB #2 | SB #3 | SB #4 | SB #1 | SB #2 | SB #3 | SB #4 | SB #1 | SB #2 | SB #3 | SB #4 | SB #1 | SB #2 | SB #3 | SB #4 | SB #1 | SB #2 | SB #3 | SB #4 | |
| 30 | 136.9 | 159.4 | 192.6 | 215.6 | 115.5 | 141.7 | 171.6 | 192.0 | 98.7 | 130.9 | 158.2 | 177.0 | 87.5 | 121.9 | 148.3 | 165.8 | 79.5 | 110.7 | 138.7 | 156.8 | 73.2 | 102.1 | 127.9 | 148.3 | 68.2 | 95.3 | 119.3 | 140.1 | 64.2* | 89.6* | 112.2* | 131.7* | 178 |
| 35 | 131.7 | 153.4 | 185.4 | 207.4 | 106.9 | 136.5 | 165.0 | 184.6 | 91.3 | 125.9 | 152.2 | 170.2 | 81.1 | 112.9 | 141.3 | 159.4 | 73.5 | 102.5 | 128.3 | 150.4 | 67.8 | 94.5 | 118.3 | 142.1 | 63.2 | 88.2 | 110.4 | 133.9 | 59.4* | 82.8* | 103.8* | 125.3* | 169 |
| 40 | 126.1 | 148.3 | 179.4 | 200.6 | 100.1 | 131.9 | 159.6 | 178.6 | 85.5 | 119.1 | 146.9 | 164.6 | 75.7 | 105.7 | 132.3 | 154.0 | 68.9 | 95.9 | 120.1 | 145.1 | 63.4 | 88.5 | 110.7 | 136.9 | 59.0 | 82.4 | 103.2 | 128.7 | 55.6* | 77.6* | 97.0* | 118.6* | 162 |
| 45 | 118.9 | 143.9 | 174.2 | 194.8 | 94.3 | 128.1 | 155.0 | 173.4 | 80.5 | 112.3 | 140.5 | 159.6 | 71.5 | 99.5 | 124.7 | 149.3 | 64.8 | 90.5 | 113.1 | 140.7 | 59.8 | 83.2 | 104.5 | 132.5 | 55.8* | 77.6* | 97.2* | 124.1* | ** | ** | ** | ** | 156 |
| 50 | 112.7 | 140.1 | 169.6 | 189.8 | 89.5 | 124.7 | 150.8 | 168.8 | 76.5 | 106.5 | 133.3 | 155.4 | 67.7 | 94.5 | 118.3 | 145.3 | 61.4 | 85.7 | 107.3 | 136.7 | 56.6 | 79.0 | 99.0 | 126.7 | 52.8* | 73.6* | 92.2* | 118.0* | ** | ** | ** | ** | 150.9 |
| 55 | 107.5 | 136.9 | 165.6 | 185.2 | 85.3 | 118.9 | 147.3 | 164.8 | 72.9 | 101.5 | 127.1 | 151.8 | 64.7 | 90.1 | 112.7 | 141.7 | 58.6 | 81.7 | 102.3 | 130.9 | 54.0 | 75.4 | 94.4 | 120.7 | 50.4* | 70.2* | 88.0* | 109.6* | ** | ** | ** | ** | 146 |
| 60 | 102.9 | 133.9 | 162.0 | 181.4 | 81.7 | 113.9 | 142.5 | 161.2 | 69.7 | 97.1 | 121.7 | 148.3 | 61.9 | 86.3 | 107.9 | 138.1 | 56.0 | 78.3 | 98.1 | 125.3 | 51.8 | 72.2 | 90.4 | 115.5 | 48.2* | 67.2* | 84.2* | 100.4* | ** | ** | ** | ** | 142 |
| 70 | 95.3 | 128.9 | 155.8 | 174.4 | 75.5 | 105.3 | 131.9 | 155.2 | 64.5 | 89.9 | 112.7 | 142.7 | 57.3 | 79.9 | 99.9 | 127.7 | 51.8 | 72.4 | 90.7 | 116.1 | 47.8* | 66.8* | 83.6* | 107.0* | ** | ** | ** | ** | ** | ** | ** | ** | 135 |
| 80 | 89.1 | 124.3 | 150.8 | 168.8 | 70.7 | 98.5 | 123.3 | 150.0 | 60.3 | 84.1 | 105.3 | 134.7 | 53.4 | 74.7 | 93.5 | 119.5 | 48.6 | 67.6 | 84.8 | 108.5 | 44.8* | 62.4* | 78.2* | 99.2* | ** | ** | ** | ** | ** | ** | ** | ** | 129.7 |
| 90 | 84.1 | 117.1 | 146.3 | 163.8 | 66.7 | 92.9 | 116.3 | 145.5 | 56.9 | 79.3 | 99.3 | 127.1 | 50.4 | 70.3 | 88.1 | 112.7 | 45.8 | 63.8 | 80.0 | 102.3 | 42.2* | 58.8* | 73.6* | 88.0* | ** | ** | ** | ** | ** | ** | ** | ** | 125 |
| 100 | 79.7 | 111.1 | 139.1 | 159.6 | 63.3 | 88.1 | 110.3 | 141.1 | 53.9 | 75.3 | 94.3 | 120.5 | 47.8 | 66.7 | 83.5 | 106.9 | 43.4 | 60.6 | 75.8 | 97.0 | ** | ** | ** | ** | ** | ** | ** | ** | ** | ** | ** | ** | 120.8 |
| 110 | 75.9 | 105.9 | 132.5 | 155.8 | 60.3 | 84.1 | 105.1 | 134.5 | 51.5 | 71.7 | 89.9 | 114.9 | 45.6 | 63.6 | 79.7 | 101.9 | 41.4 | 57.6 | 72.2 | 92.4 | ** | ** | ** | ** | ** | ** | ** | ** | ** | ** | ** | ** | 117.2 |
| 120 | 72.7 | 101.5 | 126.9 | 152.4 | 57.7 | 80.5 | 100.7 | 128.7 | 49.3 | 68.7 | 86.1 | 109.9 | 43.6 | 60.8 | 76.2 | 97.5 | 39.6 | 55.2 | 69.2 | 88.4 | ** | ** | ** | ** | ** | ** | ** | ** | ** | ** | ** | ** | 114 |

* FOR INTERPOLATION ONLY (MAXIMUM WIDTH GOVERNS) ** NOT USABLE

NOTES: "SB" = STORM BAR, SB #1 = 3", SB #2 = 3" WITH INSERT, SB #3 = 4", & SB #4 = 4" WITH INSERT

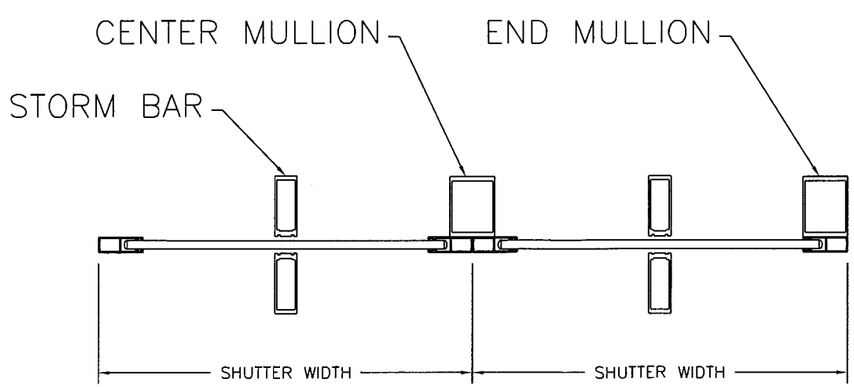


## TWO SPANS

09-0351.09
11/05/11
Miami Dade Product Control Division

ROLL-A-WAY BY QMI
1661 GLENLAKE AVENUE
ITASCA, IL 60143
COPYRIGHT © 2008 QMI

DRAWING TITLE:
AL2-E 40MM SLAT
PRODUCT APPROVAL

D.L. Fowler
Professional Engineer
Florida License No.
PE0050458
3-24-09

| | |
|---|---|
| DRAWN: | DLF |
| DATE: | 07-07-09 |
| APPROVED: | DF |
| DATE: | 07-28-09 |
| DRAWING NO: | 3-01-036 |
| SIZE: B | REV: |
| SCALE: | 1" = 10" |
| SHEET: | 17 OF 19 |

# APPLICATION CHARTS FOR THREE SPAN SHUTTERS (MAX. LIMITS)

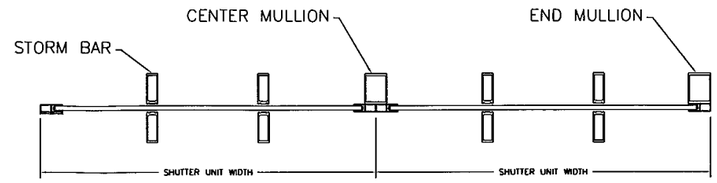


## THREE SPANS

**HEADER #1, THREE SPANS**
MAXIMUM ALLOWABLE UNIT HEIGHTS, FOR GIVEN PRESSURE & UNIT WIDTH, PER TOTAL SYSTEM DEFLECTION LESS THAN 2"

| DESIGN PRESSURE PSF | 110" UNIT WIDTH | | | | 130" UNIT WIDTH | | | | 150" UNIT WIDTH | | | | 170" UNIT WIDTH | | | | 190" UNIT WIDTH | | | | 210" UNIT WIDTH | | | | 230" UNIT WIDTH | | | | MAXIMUM UNIT WIDTH |
|---|---|---|---|---|---|---|---|---|---|---|---|---|---|---|---|---|---|---|---|---|---|---|---|---|---|---|---|---|---|
| | SB #1 | SB #2 | SB #3 | SB #4 | SB #1 | SB #2 | SB #3 | SB #4 | SB #1 | SB #2 | SB #3 | SB #4 | SB #1 | SB #2 | SB #3 | SB #4 | SB #1 | SB #2 | SB #3 | SB #4 | SB #1 | SB #2 | SB #3 | SB #4 | SB #1 | SB #2 | SB #3 | SB #4 | |
| 30 | 108.7 | 125.5 | 135.9 | 135.9 | 96.3 | 96.3 | 96.3 | 96.3 | 71.7 | 71.7 | 71.7 | 71.7 | 55.5 | 55.5 | 55.5 | 55.5 | 42.3 | 42.9 | 43.1 | 43.3 | 28.8 | 29.0 | 29.0 | 29.0 | 20.0 | 20.2 | 20.2 | 20.2 | 249.1 |
| 35 | 100.7 | 116.5 | 116.5 | 116.5 | 82.5 | 82.5 | 82.5 | 82.5 | 61.5 | 61.5 | 61.5 | 61.5 | 47.5 | 47.5 | 47.5 | 47.5 | 36.8 | 37.0 | 37.2 | 37.2 | 24.8 | 24.8 | 25.0 | 25.0 | 17.2 | 17.2 | 17.2 | 17.2 | 236.9 |
| 40 | 94.1 | 101.9 | 101.9 | 101.9 | 72.1 | 72.1 | 72.1 | 72.1 | 53.7 | 53.7 | 53.7 | 53.7 | 41.5 | 41.5 | 41.5 | 41.5 | 32.4 | 32.4 | 32.6 | 32.6 | 21.8 | 21.8 | 21.8 | 21.8 | 15.0* | 15.0* | 15.0* | 15.0* | 226.8 |
| 45 | 88.7 | 90.5 | 90.5 | 90.5 | 64.1 | 64.1 | 64.1 | 64.1 | 47.7 | 47.7 | 47.7 | 47.7 | 37.0 | 37.0 | 37.0 | 37.0 | 28.8 | 29.0 | 29.0 | 29.0 | 19.4 | 19.4 | 19.4 | 19.4 | 13.4* | 13.4* | 13.4* | 13.4* | 218.3 |
| 50 | 81.5 | 81.5 | 81.5 | 81.5 | 57.7 | 57.7 | 57.7 | 57.7 | 42.9 | 42.9 | 42.9 | 42.9 | 33.4 | 33.4 | 33.4 | 33.4 | 26.0 | 26.0 | 26.2 | 26.2 | 17.4 | 17.4 | 17.4 | 17.4 | 12.0* | 12.0* | 12.0* | 12.0* | 211 |
| 55 | 74.1 | 74.1 | 74.1 | 74.1 | 52.5 | 52.5 | 52.5 | 52.5 | 39.1 | 39.1 | 39.1 | 39.1 | 30.2 | 30.2 | 30.2 | 30.2 | 23.6 | 23.8 | 23.8 | 23.8 | 15.8* | 15.8* | 15.8* | 15.8* | ** | ** | ** | ** | 204.5 |
| 60 | 67.9 | 67.9 | 67.9 | 67.9 | 48.1 | 48.1 | 48.1 | 48.1 | 35.8 | 35.8 | 35.8 | 35.8 | 27.8 | 27.8 | 27.8 | 27.8 | 21.8 | 21.8 | 21.8 | 21.8 | 14.6* | 14.6* | 14.6* | 14.6* | ** | ** | ** | ** | 198.8 |
| 70 | 58.1 | 58.1 | 58.1 | 58.1 | 41.1 | 41.1 | 41.1 | 41.1 | 30.8 | 30.8 | 30.8 | 30.8 | 23.8 | 23.8 | 23.8 | 23.8 | 18.6* | 18.6* | 18.6* | 18.6* | ** | ** | ** | ** | ** | ** | ** | ** | 189 |
| 80 | 50.9 | 50.9 | 50.9 | 50.9 | 36.2 | 36.2 | 36.2 | 36.2 | 27.0 | 27.0 | 27.0 | 27.0 | 20.8 | 20.8 | 20.8 | 20.8 | 16.4* | 16.4* | 16.4* | 16.4* | ** | ** | ** | ** | ** | ** | ** | ** | 181 |
| 90 | 45.3 | 45.3 | 45.3 | 45.3 | 32.2 | 32.2 | 32.2 | 32.2 | 24.0 | 24.0 | 24.0 | 24.0 | 18.6 | 18.6 | 18.6 | 18.6 | 14.6* | 14.6* | 14.6* | 14.6* | ** | ** | ** | ** | ** | ** | ** | ** | 174.3 |
| 100 | 40.7 | 40.7 | 40.7 | 40.7 | 29.0 | 29.0 | 29.0 | 29.0 | 21.6 | 21.6 | 21.6 | 21.6 | 16.6* | 16.6* | 16.6* | 16.6* | ** | ** | ** | ** | ** | ** | ** | ** | ** | ** | ** | ** | 168.4 |
| 110 | 37.0 | 37.0 | 37.0 | 37.0 | 26.2 | 26.2 | 26.2 | 26.2 | 19.6 | 19.6 | 19.6 | 19.6 | 15.2* | 15.2* | 15.2* | 15.2* | ** | ** | ** | ** | ** | ** | ** | ** | ** | ** | ** | ** | 163.3 |
| 120 | 34.0 | 34.0 | 34.0 | 34.0 | 24.0 | 24.0 | 24.0 | 24.0 | 18.0 | 18.0 | 18.0 | 18.0 | 13.7* | 13.7* | 13.7* | 13.7* | ** | ** | ** | ** | ** | ** | ** | ** | ** | ** | ** | ** | 158.8 |

**HEADER #2, THREE SPANS**
MAXIMUM ALLOWABLE UNIT HEIGHTS, FOR GIVEN PRESSURE & UNIT WIDTH, PER TOTAL SYSTEM DEFLECTION LESS THAN 2"

| DESIGN PRESSURE PSF | 110" UNIT WIDTH | | | | 130" UNIT WIDTH | | | | 150" UNIT WIDTH | | | | 170" UNIT WIDTH | | | | 190" UNIT WIDTH | | | | 210" UNIT WIDTH | | | | 230" UNIT WIDTH | | | | MAXIMUM UNIT WIDTH |
|---|---|---|---|---|---|---|---|---|---|---|---|---|---|---|---|---|---|---|---|---|---|---|---|---|---|---|---|---|---|
| | SB #1 | SB #2 | SB #3 | SB #4 | SB #1 | SB #2 | SB #3 | SB #4 | SB #1 | SB #2 | SB #3 | SB #4 | SB #1 | SB #2 | SB #3 | SB #4 | SB #1 | SB #2 | SB #3 | SB #4 | SB #1 | SB #2 | SB #3 | SB #4 | SB #1 | SB #2 | SB #3 | SB #4 | |
| 30 | 108.7 | 134.3 | 161.6 | 180.0 | 99.5 | 125.5 | 150.2 | 166.8 | 92.3 | 116.3 | 137.7 | 150.2 | 86.5 | 105.9 | 116.1 | 116.1 | 81.7 | 92.5 | 92.5 | 92.5 | 72.5 | 75.5 | 75.5 | 75.5 | 59.7 | 62.7 | 62.7 | 62.7 | 249.1 |
| 35 | 100.7 | 128.7 | 154.8 | 172.6 | 92.1 | 119.9 | 143.3 | 159.0 | 85.5 | 110.5 | 128.7 | 128.7 | 80.1 | 99.5 | 99.5 | 99.5 | 75.7 | 79.3 | 79.3 | 79.3 | 64.7 | 64.7 | 64.7 | 64.7 | 53.3 | 53.7 | 53.7 | 53.7 | 236.9 |
| 40 | 94.1 | 124.1 | 149.1 | 166.2 | 86.1 | 115.3 | 137.5 | 151.2 | 79.9 | 105.7 | 112.5 | 112.5 | 74.9 | 87.1 | 87.1 | 87.1 | 69.3 | 69.3 | 69.3 | 69.3 | 56.5 | 56.5 | 56.5 | 56.5 | 46.8* | 46.8* | 46.8* | 46.8* | 226.8 |
| 45 | 88.7 | 120.1 | 144.1 | 160.6 | 81.3 | 111.3 | 132.5 | 134.3 | 75.3 | 100.1 | 100.1 | 100.1 | 70.7 | 77.3 | 77.3 | 77.3 | 61.7 | 61.7 | 61.7 | 61.7 | 50.3 | 50.3 | 50.2 | 50.2 | 41.6* | 41.6* | 41.6* | 41.6* | 218.3 |
| 50 | 84.1 | 116.7 | 139.9 | 155.8 | 77.1 | 107.3 | 120.9 | 120.9 | 71.5 | 90.1 | 90.1 | 90.1 | 66.9 | 69.7 | 69.7 | 69.7 | 55.5 | 55.5 | 55.5 | 55.5 | 45.2 | 45.2 | 45.2 | 45.2 | 37.5* | 37.5* | 37.5* | 37.5* | 211 |
| 55 | 80.3 | 111.9 | 136.1 | 151.6 | 73.5 | 102.3 | 109.9 | 109.9 | 68.1 | 81.9 | 81.9 | 81.9 | 63.3 | 63.3 | 63.3 | 63.3 | 50.5 | 50.5 | 50.5 | 50.5 | 41.0* | 41.0* | 41.0* | 41.0* | ** | ** | ** | ** | 204.5 |
| 60 | 76.9 | 107.1 | 132.7 | 142.3 | 70.3 | 98.1 | 100.7 | 100.7 | 65.3 | 75.1 | 75.1 | 75.1 | 58.1 | 58.1 | 58.1 | 58.1 | 46.3 | 46.2 | 46.2 | 46.2 | 37.7* | 37.7* | 37.7* | 37.7* | ** | ** | ** | ** | 198.8 |
| 70 | 71.1 | 99.1 | 121.9 | 121.9 | 65.1 | 86.3 | 86.3 | 86.3 | 60.5 | 64.3 | 64.3 | 64.3 | 49.7 | 49.7 | 49.7 | 49.7 | 39.4* | 39.4* | 39.4* | 39.4* | ** | ** | ** | ** | ** | ** | ** | ** | 189 |
| 80 | 66.5 | 92.7 | 106.7 | 106.7 | 60.9 | 75.5 | 75.5 | 75.5 | 56.3 | 56.3 | 56.3 | 56.3 | 43.4 | 43.4 | 43.4 | 43.4 | 34.7* | 34.7* | 34.7* | 34.7* | ** | ** | ** | ** | ** | ** | ** | ** | 181 |
| 90 | 62.7 | 87.3 | 94.7 | 94.7 | 57.5 | 67.1 | 67.1 | 67.1 | 49.9 | 49.9 | 49.9 | 49.9 | 38.6 | 38.6 | 38.6 | 38.6 | 30.7* | 30.7* | 30.7* | 30.7* | ** | ** | ** | ** | ** | ** | ** | ** | 174.3 |
| 100 | 59.5 | 82.9 | 85.3 | 85.3 | 54.5 | 60.3 | 60.3 | 60.3 | 44.9 | 44.9 | 44.8 | 44.8 | 34.7* | 34.7* | 34.7* | 34.7* | ** | ** | ** | ** | ** | ** | ** | ** | ** | ** | ** | ** | 168.4 |
| 110 | 56.7 | 77.5 | 77.5 | 77.5 | 51.9 | 54.9 | 54.9 | 54.9 | 40.8 | 40.8 | 40.8 | 40.8 | 31.7* | 31.7* | 31.7* | 31.7* | ** | ** | ** | ** | ** | ** | ** | ** | ** | ** | ** | ** | 163.3 |
| 120 | 54.3 | 71.1 | 71.1 | 71.1 | 49.7 | 50.3 | 50.3 | 50.3 | 37.5 | 37.5 | 37.5 | 37.5 | 28.9* | 28.9* | 28.9* | 28.9* | ** | ** | ** | ** | ** | ** | ** | ** | ** | ** | ** | ** | 158.8 |

* FOR INTERPOLATION ONLY (MAXIMUM WIDTH GOVERNS) ** NOT USABLE

NOTES: "SB" = STORM BAR, SB #1 = 3", SB #2 = 3" WITH INSERT, SB #3 = 4", & SB #4 = 4" WITH INSERT


ROLL-A-WAY BY QMI
1661 GLENLAKE AVENUE
ITASCA, IL 60143


COPYRIGHT © 2008
QMI


DRAWING TITLE:
AL2-E 40MM SLAT
PRODUCT APPROVAL

D.L. Fowler
Professional Engineer
Florida License No.
PE0050458
3-24-09

PRODUCT APPROVAL
as complying with the Florida
Building Code
Compliance No. 09-0331.09
Expiration Date 11/08/11
By
Miami-Dade Product Control
Division

| | |
|---|---|
| DRAWN: | DLF |
| DATE: | 02-02-09 |
| APPROVED: | DF |
| DATE: | 02-28-09 |
| DRAWING NO: | 3-01-036 |
| SIZE: B | REV: |
| SCALE: | 1" = 20" |
| SHEET: | 18 OF 19 |

# APPLICATION CHART FOR THREE SPAN SHUTTERS (MAX. LIMITS)

**HEADER #3, THREE SPANS**

MAXIMUM ALLOWABLE UNIT HEIGHTS, FOR GIVEN PRESSURE & UNIT WIDTH, PER TOTAL SYSTEM DEFLECTION LESS THAN 2"

| DESIGN PRESSURE PSF | 110" UNIT WIDTH | | | | 130" UNIT WIDTH | | | | 150" UNIT WIDTH | | | | 170" UNIT WIDTH | | | | 190" UNIT WIDTH | | | | 210" UNIT WIDTH | | | | 230" UNIT WIDTH | | | | MAXIMUM UNIT WIDTH |
|---|---|---|---|---|---|---|---|---|---|---|---|---|---|---|---|---|---|---|---|---|---|---|---|---|---|---|---|---|---|
| | SB #1 | SB #2 | SB #3 | SB #4 | SB #1 | SB #2 | SB #3 | SB #4 | SB #1 | SB #2 | SB #3 | SB #4 | SB #1 | SB #2 | SB #3 | SB #4 | SB #1 | SB #2 | SB #3 | SB #4 | SB #1 | SB #2 | SB #3 | SB #4 | SB #1 | SB #2 | SB #3 | SB #4 | |
| 30 | 108.7 | 136.3 | 164.4 | 183.8 | 99.5 | 129.1 | 155.6 | 173.6 | 92.3 | 122.7 | 147.1 | 164.0 | 86.5 | 116.1 | 138.7 | 153.8 | 81.7 | 109.3 | 129.5 | 142.7 | 77.5 | 101.7 | 119.1 | 130.1 | 74.1 | 93.1 | 106.9 | 115.5 | 249.1 |
| 35 | 100.7 | 130.9 | 158.0 | 176.6 | 92.1 | 123.9 | 149.1 | 166.6 | 85.5 | 117.5 | 140.9 | 156.8 | 80.1 | 110.9 | 132.1 | 146.5 | 75.7 | 103.9 | 122.7 | 135.1 | 71.9 | 96.1 | 111.9 | 121.9 | 68.4 | 86.9 | 99.1 | 105.1 | 236.9 |
| 40 | 94.1 | 126.5 | 152.6 | 170.4 | 86.1 | 119.7 | 143.9 | 160.6 | 79.9 | 111.5 | 135.5 | 150.8 | 74.9 | 104.5 | 126.7 | 140.3 | 70.7 | 98.5 | 116.9 | 128.5 | 67.0 | 91.1 | 105.5 | 110.7 | 64.0* | 81.7* | 91.8* | 91.8* | 226.8 |
| 45 | 88.7 | 122.7 | 147.9 | 165.2 | 81.3 | 113.3 | 139.3 | 155.4 | 75.3 | 105.1 | 130.9 | 145.5 | 70.7 | 98.5 | 121.9 | 134.7 | 66.7 | 92.9 | 111.9 | 120.7 | 63.2 | 86.9 | 98.5 | 98.5 | 60.4* | 77.1* | 81.6* | 81.6* | 218.3 |
| 50 | 84.1 | 117.3 | 143.9 | 160.6 | 77.1 | 107.3 | 134.5 | 150.8 | 71.5 | 99.7 | 124.7 | 140.9 | 66.9 | 93.3 | 116.9 | 130.1 | 63.2 | 88.1 | 107.5 | 108.7 | 60.0 | 83.1 | 88.5 | 88.4 | 57.2* | 72.9* | 73.4* | 73.4* | 211 |
| 55 | 80.3 | 111.9 | 139.9 | 156.6 | 73.5 | 102.3 | 128.1 | 146.7 | 68.1 | 95.1 | 118.9 | 136.7 | 63.9 | 89.1 | 111.5 | 123.9 | 60.2 | 84.1 | 98.7 | 98.7 | 57.2* | 79.7* | 80.4* | 80.4* | ** | ** | ** | ** | 204.5 |
| 60 | 76.9 | 107.1 | 134.1 | 153.0 | 70.3 | 98.1 | 122.7 | 143.1 | 65.3 | 90.9 | 113.9 | 133.1 | 61.1 | 85.3 | 106.7 | 113.7 | 57.6 | 80.5 | 90.5 | 90.5 | 54.8* | 73.6* | 73.6* | 73.6* | ** | ** | ** | ** | 198.8 |
| 70 | 71.1 | 99.1 | 124.1 | 146.7 | 65.1 | 90.7 | 113.7 | 136.9 | 60.5 | 84.3 | 105.5 | 125.9 | 56.6 | 78.9 | 97.3 | 97.3 | 53.4* | 74.5* | 77.4* | 77.4* | ** | ** | ** | ** | ** | ** | ** | ** | 189 |
| 80 | 66.5 | 92.7 | 116.1 | 141.5 | 60.9 | 84.9 | 106.3 | 131.7 | 56.5 | 78.7 | 98.7 | 110.1 | 52.8 | 73.7 | 85.1 | 85.1 | 49.8* | 67.8* | 67.8* | 67.8* | ** | ** | ** | ** | ** | ** | ** | ** | 181 |
| 90 | 62.7 | 87.3 | 109.5 | 137.1 | 57.5 | 80.1 | 100.1 | 127.1 | 53.2 | 74.3 | 92.9 | 97.9 | 49.8 | 69.5 | 75.6 | 75.6 | 47.0* | 60.2* | 60.2* | 60.2* | ** | ** | ** | ** | ** | ** | ** | ** | 174.3 |
| 100 | 59.5 | 82.9 | 103.7 | 132.7 | 54.5 | 75.9 | 95.1 | 118.3 | 50.4 | 70.5 | 88.1 | 88.1 | 47.2* | 65.8* | 68.0* | 68.0* | ** | ** | ** | ** | ** | ** | ** | ** | ** | ** | ** | ** | 168.4 |
| 110 | 56.7 | 79.1 | 98.9 | 126.5 | 51.9 | 72.3 | 90.7 | 107.5 | 48.0 | 67.1 | 80.1 | 80.1 | 45.0* | 61.8* | 61.8* | 61.8* | ** | ** | ** | ** | ** | ** | ** | ** | ** | ** | ** | ** | 163.3 |
| 120 | 54.3 | 75.7 | 94.7 | 121.1 | 49.6 | 69.3 | 86.7 | 98.5 | 46.0 | 64.3 | 73.3 | 73.2 | 43.2* | 56.6* | 56.6* | 56.6* | ** | ** | ** | ** | ** | ** | ** | ** | ** | ** | ** | ** | 158.8 |

* FOR INTERPOLATION ONLY (MAXIMUM WIDTH GOVERNS) ** NOT USABLE

NOTES: "SB" = STORM BAR, SB #1 = 3", SB #2 = 3" WITH INSERT, SB #3 = 4", & SB #4 = 4" WITH INSERT

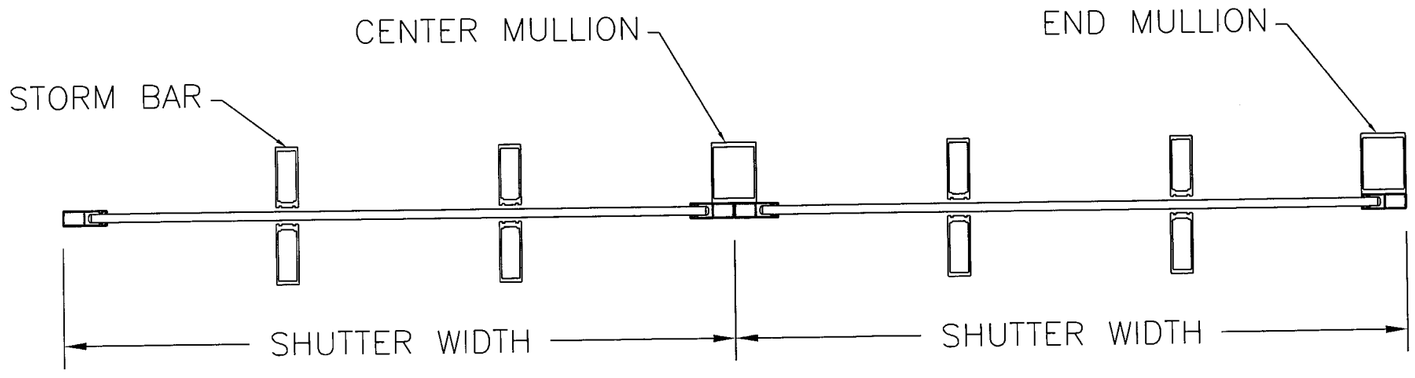


## THREE SPANS

Approved for use in the Florida
Application No. 09-0331.09
Expiration Date 11/08/11
By M. Hawk
Miami Dade Product Control Division


ROLL-A-WAY BY QMI
1661 GLENLAKE AVENUE
ITASCA, IL 60143


COPYRIGHT © 2008 QMI


DRAWING TITLE:
AL2-E 40MM SLAT
PRODUCT APPROVAL


D.L. Fowler
Professional Engineer
Florida License No.
PE0050458


3-27-09

| | |
|---|---|
| DRAWN: | DLF |
| DATE: | 02-02-09 |
| APPROVED: | DF |
| DATE: | 02-28-09 |
| DRAWING NO: | 3-01-036 |
| SIZE: B | REV: |
| SCALE: | 1" = 10" |
| SHEET: | 19 OF 19 |