MIAMI-DADE COUNTY
BUILDING CODE COMPLIANCE OFFICE (BCCO)
PRODUCT CONTROL DIVISION

MIAMI-DADE COUNTY, FLORIDA
METRO-DADE FLAGLER BUILDING
140 WEST FLAGLER STREET, SUITE 1603
MIAMI, FLORIDA 33130-1563
(305) 375-2901 FAX (305) 372-6339
www.miamidade.gov/buildingcode

NOTICE OF ACCEPTANCE (NOA)

YKK AP America, Inc.
332 Firetower Road
Dublin, Georgia 31021

SCOPE:

This NOA is being issued under the applicable rules and regulations governing the use of construction materials. The documentation submitted has been reviewed by Miami-Dade County Product Control Division and accepted by the Board of Rules and Appeals (BORA) to be used in Miami Dade County and other areas where allowed by the Authority Having Jurisdiction (AHJ).

This NOA shall not be valid after the expiration date stated below. The Miami-Dade County Product Control Division (In Miami Dade County) and/or the AHJ (in areas other than Miami Dade County) reserve the right to have this product or material tested for quality assurance purposes. If this product or material fails to perform in the accepted manner, the manufacturer will incur the expense of such testing and the AHJ may immediately revoke, modify, or suspend the use of such product or material within their jurisdiction. BORA reserves the right to revoke this acceptance, if it is determined by Miami-Dade County Product Control Division that this product or material fails to meet the requirements of the applicable building code. This product is approved as described herein, and has been designed to comply with the Florida Building Code, including the High Velocity Hurricane Zone.

DESCRIPTION: Series "YHC-300 IG" Aluminum Curtain Wall System – L.M.I.

APPROVAL DOCUMENT: Drawing No. **W06-87**, titled "YHC-300 IG Aluminum Curtain Wall System (L.M.I.)", sheets 1, 2, 2.1, 3, 4, 4.1, 5, 6, 7, 7.1, 8, through 19, 19.1, 19.2, 20, 21 and 22 of 22, dated 12/27/06, prepared by Al-Farooq Corporation, signed and sealed by Humayoun Farooq, P.E., bearing the Miami-Dade County Product Control Revision stamp with the Notice of Acceptance number and expiration date by the Miami-Dade County Product Control Division.

MISSILE IMPACT RATING: Large and Small Missile Impact Resistant

LABELING: Each unit shall bear a permanent label with the manufacturer's name or logo, city, state and following statement: "Miami-Dade County Product Control Approved", unless otherwise noted herein.

RENEWAL of this NOA shall be considered after a renewal application has been filed and there has been no change in the applicable building code negatively affecting the performance of this product.

TERMINATION of this NOA will occur after the expiration date or if there has been a revision or change in the materials, use, and/or manufacture of the product or process. Misuse of this NOA as an endorsement of any product, for sales, advertising or any other purposes shall automatically terminate this NOA. Failure to comply with any section of this NOA shall be cause for termination and removal of NOA.

ADVERTISEMENT: The NOA number preceded by the words Miami-Dade County, Florida, and followed by the expiration date may be displayed in advertising literature. If any portion of the NOA is displayed, then it shall be done in its entirety.

INSPECTION: A copy of this entire NOA shall be provided to the user by the manufacturer or its distributors and shall be available for inspection at the job site at the request of the Building Official.

This NOA **revises and renews NOA # 08-0605.02 and # 08-0605.03** and consists of this page 1 and evidence pages E-1, E-2, and E-3, as well as approval document mentioned above.

The submitted documentation was reviewed by **Jaime Gascon, P.E.**

MIAMI-DADE COUNTY APPROVED

J. GASCON
6/24/09

YKK AP America, Inc.

NOTICE OF ACCEPTANCE: EVIDENCE SUBMITTED

A. DRAWINGS

1. Manufacturer's die drawings and sections.
2. Drawing No **W06-87**, Sheets 1, 2, 2.1, 3, 4, 4.1, 5, 6, 7, 7.1, 8, through 19, 19.1, 19.2, 20, 21 and 22 of 22, titled "YHC-300 IG Aluminum Curtain Wall System (L.M.I.)", dated 12/27/06, prepared by Al-Farooq Corp., signed and sealed by Humayoun Farooq, P.E.

B. TESTS

1. Test reports on: 1) Air Infiltration Test, per FBC, TAS 202-94
   2) Uniform Static Air Pressure Test, Loading per FBC TAS 202-94
   3) Water Resistance Test, per FBC, TAS 202-94
   4) Large Missile Impact Test per FBC, TAS 201-94
   5) Cyclic Wind Pressure Loading per FBC, TAS 203-94

   along with marked-up drawings and installation diagram of aluminum curtain wall system, prepared by Hurricane Testing Laboratory, Test Report No. **HTL-0231-0106-08**, dated 01/10/2008-03/17/2008, signed and sealed by Vinu J. Abraham, P.E.
2. Test report on: 1) Air Infiltration Test, per PA 202-94
   2) Uniform Static Air Pressure Test, Loading per PA 202-94
   3) Water Resistance Test, per PA 202-94
   4) Large Missile Impact Test, per PA 201-94
   5) Cyclic Loading Test, per PA 203-94

   Along with installation diagram of an aluminum curtain wall system prepared National Certified Testing Laboratories, Test Report No. **NCTL-210-2274-4 (S) (I) (C)**, dated 01/18/00, signed and sealed by Barry Portnoy, P.E. ***(Submitted in NOA#08-0605.02)***
3. Test report on: 1) Large Missile Impact Test, per PA 201-94
   2) Cyclic Loading Test, per PA 203-94

   Along with installation diagram of an aluminum curtain wall system prepared National Certified Testing Laboratories, Test Report No. **NCTL-210-2274-10 (I) (C)**, dated 03-20-00, signed and sealed by Barry Portnoy, P.E. ***(Submitted in NOA#08-0605.02)***
4. Test report on: 1) Large Missile Impact Test, per PA 201-94
   2) Cyclic Loading Test, per PA 203-94

   Along with installation diagram of an aluminum curtain wall system prepared Hurricane Testing Laboratory, Test Report No.**HTL-0231-0401-01** (HTL01024), dated 05/23/01, signed and sealed by Vinu J. Abraham P.E.
   (Submitted in NOA#08-0605.02)
5. Test report on: 1) Air Infiltration Test, per PA 202-94
   2) Uniform Static Air Pressure Test, Loading per PA 202-94
   3) Water Resistance Test, per PA 202-94

   Along with installation diagram of an aluminum curtain wall system prepared by Construction Research Laboratory, Inc., Test Report No. **CRL-6473**, dated 09/18/987, signed and sealed by Nari Balsara, P.E.
   (Submitted in NOA#08-0605.03)

Jaime Gascon, P.E.
Chief, Product Control Division
NOA No. 09-0408.05
Expiration Date: April 11, 2013
Approval Date: July 15, 2009

NOTICE OF ACCEPTANCE: EVIDENCE SUBMITTED

6. Test report on: 1) Air Infiltration Test, per PA 202-94
   2) Uniform Static Air Pressure Test, Loading per PA 202-94
   3) Water Resistance Test, per PA 202-94
   4) Large Missile Impact Test, per PA 201-94
   5) Cyclic Loading Test, per PA 203-94

   Along with installation diagram of an aluminum curtain wall system prepared National Certified Testing Laboratories, Test Report No. **NCTL-210-1994-1 (S) (I) (C)**, dated 03/09/98, signed and sealed by Barry Portnoy, P.E.
   (Submitted in NOA#08-0605.02)
7. Test report on: 1) Large Missile Impact Test, per PA 201-94
   2) Cyclic Loading Test, per PA 203-94

   Along with installation diagram of an aluminum curtain wall system prepared National Certified Testing Laboratories, Test Report No. **NCTL-210-2274-2 (I) (C)**, dated 01/24/00, signed and sealed by Barry Portnoy P.E.
   (Submitted in NOA#08-0605.02)
8. Test report on: 1) Air Infiltration Test, per PA 202-94
   2) Uniform Static Air Pressure Test, Loading per PA 202-94
   3) Water Resistance Test, per PA 202-94

   Along with installation diagram of an aluminum curtain wall system prepared by Construction Research Laboratory, Inc., Test Report No. **CRL-6408B**, dated May 2, 1997, signed and sealed by Nari Balsara, P.E. ***(Submitted in NOA#08-0605.02)***
9. Test reports on: 1) Large Missile Impact Test, SFBC PA 201-94
   2) Cyclic Loading Test, per SFBC PA 203-94

   Along with installation diagram of aluminum curtain wall system, prepared National Certified Testing Laboratories, Test Report No. **NCTL-210-1903-1 (I, C)**, dated 4/22/97, signed and sealed by Barry Portnoy, P.E. ***(Submitted in NOA#08-0605.02)***
10. Test report on: 1) Air Infiltration Test, per PA 202-94
    2) Uniform Static Air Pressure Test, Loading per PA 202-94
    3) Water Resistance Test, per PA 202-94
    4) Large Missile Impact Test, per PA 201-94
    5) Cyclic Loading Test, per PA 203-94

    Along with installation diagram of an aluminum curtain wall system prepared National Certified Testing Laboratories, Test Report No. **NCTL-210-2324-1 (S) (I) (C)**, dated 04/12/00, signed and sealed by Barry Portnoy, P.E.
    (Submitted in NOA#08-0605.03)

Jaime Gascon, P.E.
Chief, Product Control Division
NOA No. 09-0408.05
Expiration Date: April 11, 2013
Approval Date: July 15, 2009

11. Test report on: 1) Large Missile Impact Test, per PA 201-94
2) Cyclic Loading Test, per PA 203-94
Along with installation diagram of an aluminum curtain wall system prepared National Certified Testing Laboratories, Test Report No. **NCTL-210-2274-9 (I) (C)**, dated 03/20/00, signed and sealed by Barry Portnoy, P.E.
(Submitted in NOA#08-0605.03)

12. Test report on: 1) Large Missile Impact Test, per PA 201-94
2) Small Missile Impact Test, per PA 201-94
3) Cyclic Loading Test, per PA 203-94
Along with installation diagram of an aluminum curtain wall system prepared National Certified Testing Laboratories, Test Report No. **NCTL-210-1994-2 (I) (C)**, dated 03/09/98, signed and sealed by Barry Portnoy, P.E. ***(Submitted in NOA#08-0605.03)***

C. CALCULATIONS

1. Anchor verification calculations and structural analysis, complying with FBC-2004, prepared by Al-Farooq Corporation, dated 5/10/07 and revised on 03/27/09, signed and sealed by Humayoun Farooq, P.E.
Complies with ASTM E1300-02

D. QUALITY ASSURANCE

1. Miami Dade Building Code Compliance Office (BCCO).

E. MATERIAL CERTIFICATIONS

1. Notice of Acceptance No. **08-0520.08** issued to Solutia Inc. for their "**Vanceva Composites Glass Interlayer**" dated 7/17/2008, expiring on 12/11/2013.

F. STATEMENTS

1. Statement letter of conformance, dated May 9, 2007, signed and sealed by Humayoun Farooq, P.E.

2. Statement letter of no financial interest, dated May 9, 2007, signed and sealed by Humayoun Farooq, P.E.

3. Laboratory compliance letter for Test Report no. **HTL-0231-0106-08**, issued by Hurricane Test Laboratory, Inc., dated September 17, 2008, signed and sealed by Vinu J. Abraham, P.E.

G. OTHERS

1. Notice of Acceptance No. **08-0605.02**, issued to YKK AP America, Inc. for their Series "YHC300 IG" Aluminum Curtain Wall System-L.M.I., approved on 07/10/08 and expiring on 04/11/09.

2. Notice of Acceptance No. **08-0605.03**, issued to YKK AP America, Inc. for their Series "YHC300 IG" Aluminum Curtain Wall System-L.M.I., approved on 07/10/08 and expiring on 04/18/09.

Jaime Gascon, P.E.
Chief, Product Control Division
NOA No. 09-0408.05
Expiration Date: April 11, 2013
Approval Date: July 15, 2009

YHC-300 IG ALUMINUM CURTAIN WALL SYSTEM

CURTAIN WALL SYSTEM IS RATED FOR LARGE MISSILE IMPACT. SHUTTERS ARE NOT REQD.

CODE REQUIREMENTS FOR SAFEGUARDS MUST BE OBSERVED.

THIS PRODUCT HAS BEEN DESIGNED AND TESTED TO COMPLY WITH THE REQUIREMENTS OF THE FLORIDA BUILDING CODE 2004/2007 EDITION INCLUDING HIGH VELOCITY HURRICANE ZONE (HVHZ).

ANCHORS SHALL BE AS LISTED, SPACED AS SHOWN ON DETAILS, ANCHORS EMBEDMENT TO BASE MATERIAL SHALL BE BEYOND WALL DRESSING OR STUCCO.

ANCHORING OR LOADING CONDITIONS NOT SHOWN IN THESE DETAILS ARE NOT PART OF THIS APPROVAL.

MATERIALS INCLUDING BUT NOT LIMITED TO STEEL/METAL SCREWS, THAT COME INTO CONTACT WITH OTHER DISSIMILAR MATERIALS SHALL MEET THE REQUIREMENTS OF 2004/2007 FLORIDA BLDG. CODE SECTION 2003.8.4.

INSTRUCTIONS:

USE CHARTS AS FOLLOWS.

STEP 1 DETERMINE DESIGN WIND LOAD REQUIREMENT BASED ON WIND VELOCITY, BLDG. HEIGHT, WIND ZONE USING APPLICABLE ASCE 7 STANDARD.

STEP 2 SEE CHARTS ON SHEET 3 FOR DESIGN LOAD CAPACITY OF DESIRED GLASS SIZE.

STEP 3 CHECK MULLION CAPACITY FOR A GIVEN SPACING AND HEIGHT USING CHARTS ON SHEETS 5, 6 & 8 FOR SINGLE SPANS, AND CHARTS ON SHEETS 7 & 9 FOR EQUAL MULTIPLE SPANS.

STEP 4 USING HEAD/SILL ANCHOR DETAILS ON SHEET 4 SELECT ANCHOR OPTION WITH DESIGN RATING MORE THAN DESIGN LOAD SPECIFIED IN STEP 1 ABOVE.

STEP 5 CHECK INTERMEDIATE ANCHOR CAPACITY FOR MULTIPLE SPANS USING CHARTS OR DETAILS ON SHEETS 14 THRU 19.

STEP 6 THE LOWEST VALUE RESULTING FROM STEPS 2, 3, 4 AND 5 SHALL APPLY TO ENTIRE SYSTEM.

INDEX OF DRAWING

SHEET NO.	DESCRIPTION
1	GENERAL NOTES
2	TYPICAL CURTAIN WALL ELEVATION
3	GLASS CAPACITY CHART
4	HEAD/SILL ANCHOR CAPACITY CHART
5	SINGLE SPAN MULLION CHART W/O HORIZONTALS DOOR JAMB MULLION CHART
6	SINGLE SPAN MULLION CHART WITH HORIZONTALS
7	TWIN SPAN MULLION CAPACITY
8	SINGLE SPAN CORNER MULLION
9	TWIN SPAN CORNER MULLION
10 & 11	VERTICAL AND HORIZONTAL SECTION DETAILS
12 & 13	CORNER MULLION DETAILS
14 & 15	WIND LOAD ANCHOR DETAILS
16 & 17	WIND LOAD + DEAD LOAD ANCHOR DETAILS
18 & 19	WIND LOAD + DEAD LOAD CORNER MULLION ANCHOR DETAILS
20	EXTRUSION DETAILS
21	BILL OF MATERIALS
22	CORNER CONSTRUCTION DETAILS

PRODUCT REVISED
as complying with the Florida Building Code
Acceptance No 09-0408.05
Expiration Date April 11, 2013
By
Miami-Dade Product Control Division

LAMINATED GLASS
LARGE MISSILE IMPACT

Engr: DR. HUMAYOUN FAROOQ
STRUCTURES
FLA. PE # 16557
C.A.N. 3538

APR 06 2009

AL-FAROOQ CORPORATION
ENGINEERS & PRODUCT DEVELOPMENT
1235 S.W. 87 AVE
MIAMI, FLORIDA 33174
TEL. (305) 264-8100 FAX. (305) 262-6978
COMP-ANL\W06-87YKK

YKK ap
YKK AP AMERICA INC.
332 FIRETOWER ROAD
DUBLIN, GEORGIA 31021
TEL.(478) 277-1955 FAX(478) 277-1978

YHC-300 IG ALUMINUM CURTAIN WALL SYSTEM (L.M.I.)

revisions:

no	date	by	description

date: 12-27-06
scale: -
dr. by: HAMID
chk. by:

drawing no.
W06-87

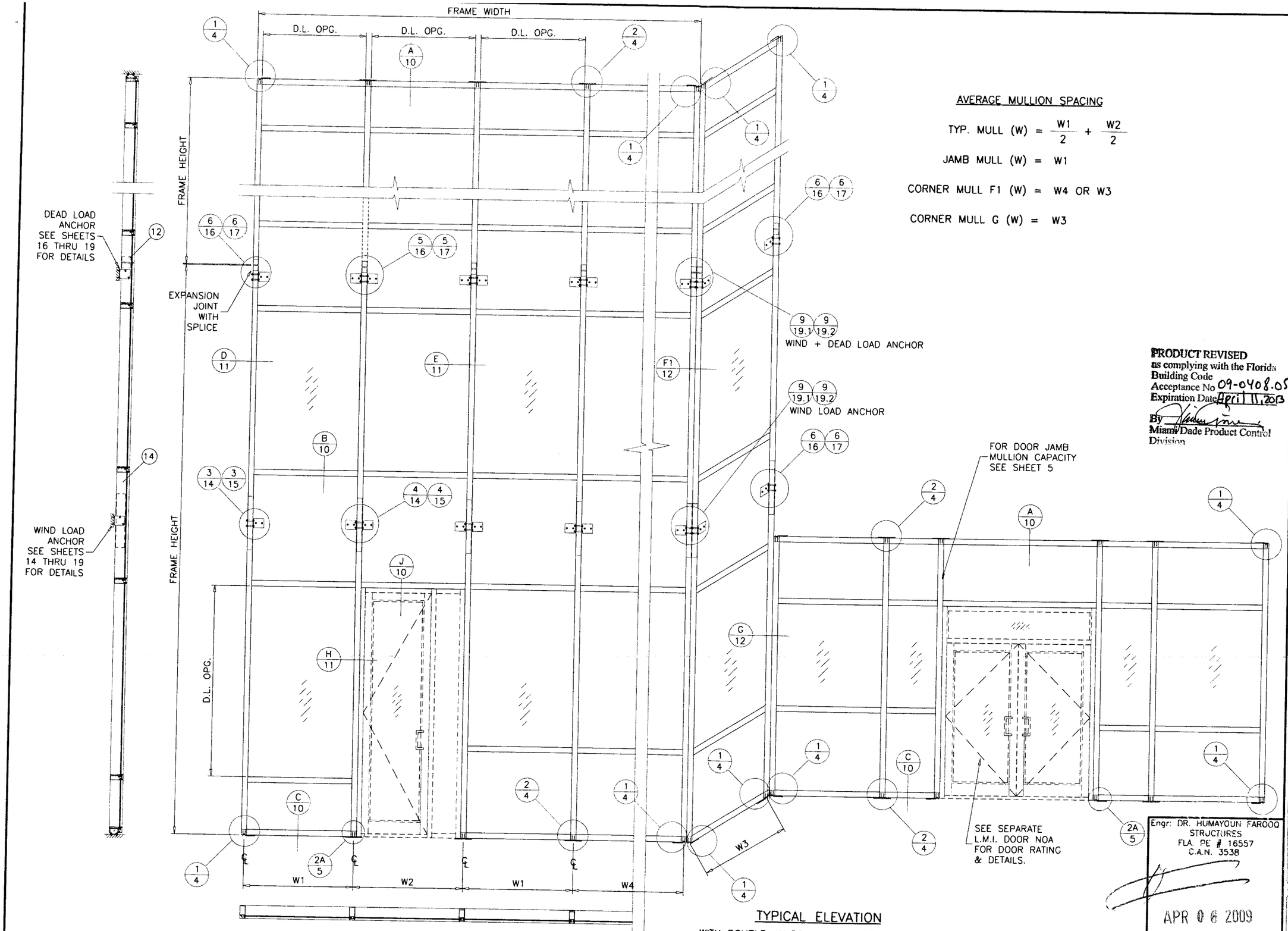

AVERAGE MULLION SPACING

TYP. MULL (W) = $\frac{W1}{2} + \frac{W2}{2}$

JAMB MULL (W) = W1

CORNER MULL F1 (W) = W4 OR W3

CORNER MULL G (W) = W3

TYPICAL ELEVATION

WITH DOUBLE JAMBS AT 90° OUTSIDE CORNER

PRODUCT REVISED
as complying with the Florida Building Code
Acceptance No 09-0408.05
Expiration Date April 11, 2013
By
Miami-Dade Product Control Division

Engr: DR. HUMAYOUN FAROOQ
STRUCTURES
FLA. PE # 16557
C.A.N. 3538

APR 0 6 2009

AL-FAROOQ CORPORATION
ENGINEERS & PRODUCT DEVELOPMENT
1235 S.W. 87 AVE
MIAMI, FLORIDA 33174
TEL. (305) 264-8100 FAX. (305) 262-6978
COMP-ANL\W06-87YKK

YHC-300 IG ALUMINUM CURTAIN WALL SYSTEM (L.M.I.)

YKK AP AMERICA INC.
332 FIRETOWER ROAD
DUBLIN, GEORGIA 31021
TEL.(478) 277-1955 FAX(478) 277-1978

revisions:			
no	date	by	description

date: 12-27-06
scale: 1/4"=1'-0"
dr. by: HAMID
chk. by:

drawing no. W06-87

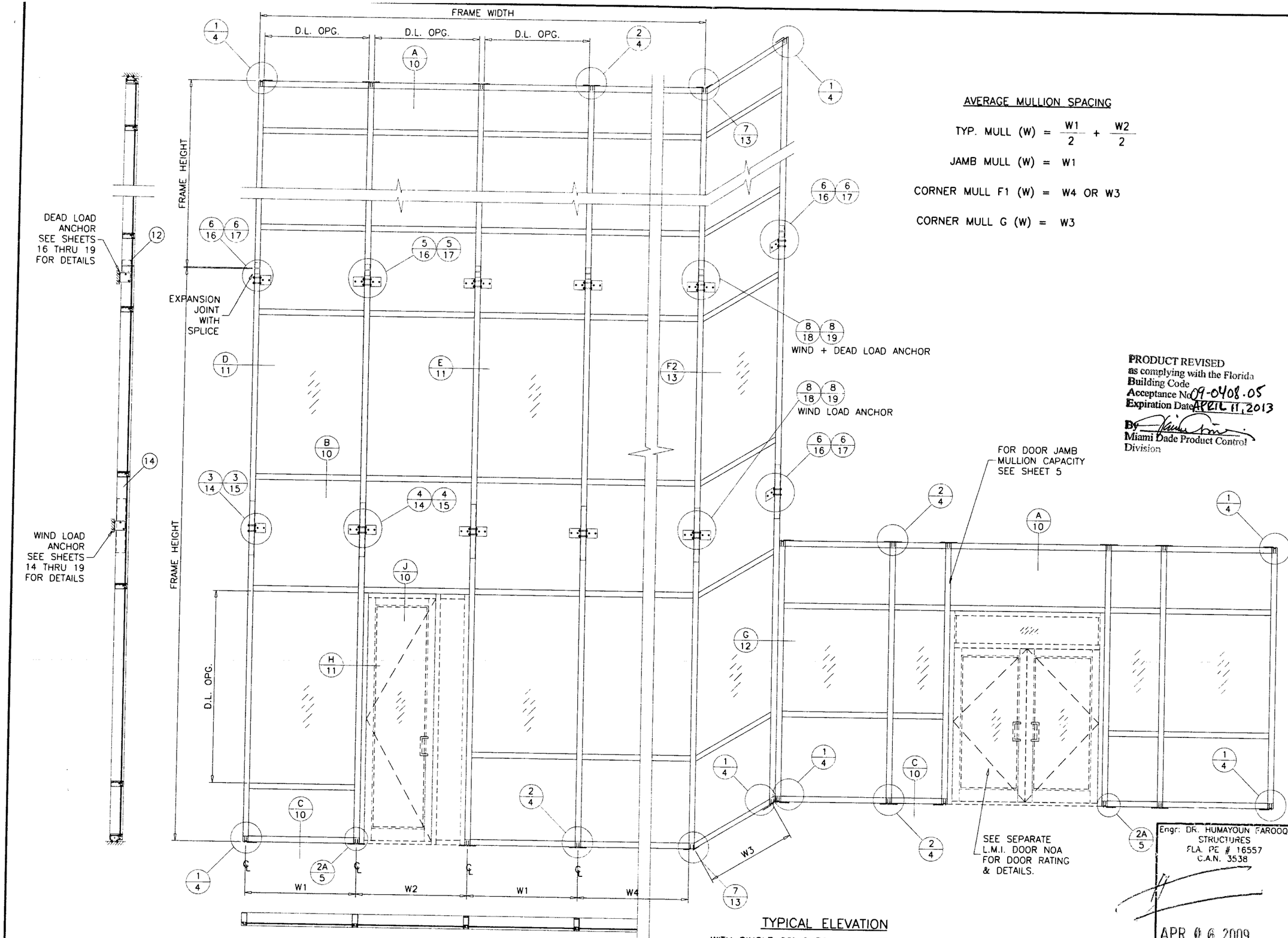

AVERAGE MULLION SPACING

TYP. MULL (W) = $\frac{W1}{2} + \frac{W2}{2}$

JAMB MULL (W) = W1

CORNER MULL F1 (W) = W4 OR W3

CORNER MULL G (W) = W3

PRODUCT REVISED
as complying with the Florida
Building Code
Acceptance No 09-0408.05
Expiration Date APRIL 11, 2013
By
Miami Dade Product Control
Division

TYPICAL ELEVATION
WITH SINGLE 90° OUTSIDE CORNER MULLION

Engr: DR. HUMAYOUN FAROOQ
STRUCTURES
FLA. PE # 16557
C.A.N. 3538

APR 0 6 2009

AL-FAROOQ CORPORATION
ENGINEERS & PRODUCT DEVELOPMENT
1235 S.W. 87 AVE
MIAMI, FLORIDA 33174
TEL. (305) 264-8100 FAX. (305) 262-6978
COMP-ANL\W06-87YKK

YHC-300 IG ALUMINUM CURTAIN WALL SYSTEM (L.M.I.)

YKK AP AMERICA INC.
332 FIRETOWER ROAD
DUBLIN, GEORGIA 31021
TEL.(478) 277-1955 FAX(478) 277-1978

revisions:

no	date	by	description

date: 12-27-06
scale: 1/4"=1'-0"
dr. by: HAMID
chk. by:

drawing no.
W06-87

sheet 2.1 of 22

GLASS LOAD CAPACITY - PSF		
NOMINAL DIMS.		GLASS TYPE 'C'
D.L.O. WIDTH	D.L.O. HEIGHT	EXT. (+) INT. (−)
27"	60"	130.0
33"		130.0
39"		130.0
45"		130.0
51"		130.0
57"		130.0
63"		130.0
69"		130.0
27"	66"	130.0
33"		130.0
39"		130.0
45"		130.0
51"		130.0
57"		130.0
63"		130.0
69"		130.0
27"	72"	130.0
33"		130.0
39"		130.0
45"		130.0
51"		130.0
57"		130.0
63"		130.0
69"		130.0
27"	78"	130.0
33"		130.0
39"		130.0
45"		130.0
51"		130.0
57"		130.0
63"		130.0
69"		130.0
27"	84"	130.0
33"		130.0
39"		130.0
45"		130.0
51"		130.0
57"		130.0
63"		130.0
27"	90"	130.0
33"		130.0
39"		130.0
45"		130.0
51"		130.0
57"		130.0
27"	94-1/2"	130.0
33"		130.0
39"		130.0
45"		130.0
51"		130.0
57"		123.6

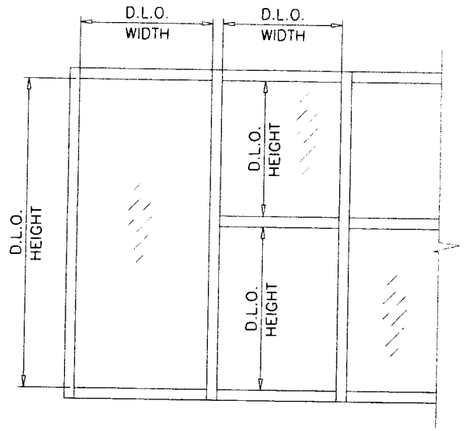

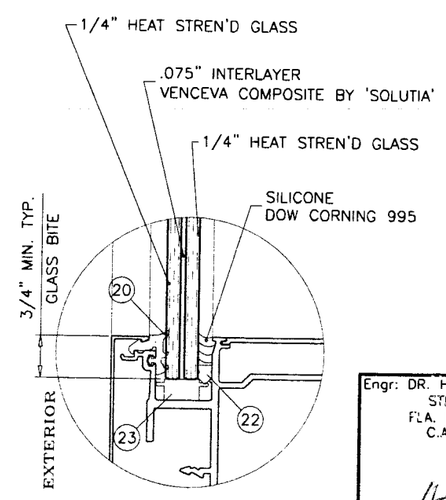

GLASS TYPE 'C'

NOTE:
GLASS CAPACITIES ON THIS SHEET ARE BASED ON ASTM E1300-02/04 (3 SEC. GUSTS).

PRODUCT REVISED
as complying with the Florida Building Code
Acceptance No 09-0408.05
Expiration Date APRIL 11, 2013
By
Miami-Dade Product Control Division

Engr: DR. HUMAYOUN FAROOQ
STRUCTURES
FLA. PE # 16557
C.A.N. 3538

APR 06 2009

AL-FAROOQ CORPORATION
ENGINEERS & PRODUCT DEVELOPMENT
1235 S.W. 87 AVE
MIAMI, FLORIDA 33174
TEL. (305) 264-8100 FAX. (305) 262-6978
COMP-ANL\W06-87YKK

YHC-300 IG ALUMINUM CURTAIN WALL SYSTEM (L.M.I.)

YKK AP AMERICA INC.
332 FIRETOWER ROAD
DUBLIN, GEORGIA 31021
TEL.(478) 277-1955 FAX(478) 277-1978

revisions:			
no	date	by	description

date: 12-27-06
scale: -
dr. by: HAMID
chk. by:

drawing no.
W06-87

ANCHOR LOAD CAPACITY – PSF EXT.(+) & INT.(–)				
NOMINAL DIMS.		ANCHOR TYPES		
WIDTH (W)	FRAME HEIGHT	A	B	C
36"	96"	130.0	130.0	130.0
39"		130.0	130.0	130.0
42"		130.0	130.0	130.0
45"		130.0	130.0	130.0
48"		130.0	130.0	130.0
51"		130.0	130.0	130.0
54"		130.0	130.0	130.0
57"		130.0	130.0	130.0
60"		130.0	130.0	130.0
66"		130.0	130.0	130.0
72"		130.0	120.5	130.0
36"	102"	130.0	130.0	130.0
39"		130.0	130.0	130.0
42"		130.0	130.0	130.0
45"		130.0	130.0	130.0
48"		130.0	130.0	130.0
51"		130.0	130.0	130.0
54"		130.0	130.0	130.0
57"		130.0	130.0	130.0
60"		130.0	130.0	130.0
66"		130.0	123.7	130.0
72"		130.0	113.4	130.0
36"	108"	130.0	130.0	130.0
39"		130.0	130.0	130.0
42"		130.0	130.0	130.0
45"		130.0	130.0	130.0
48"		130.0	130.0	130.0
51"		130.0	130.0	130.0
54"		130.0	130.0	130.0
57"		130.0	130.0	130.0
60"		130.0	128.5	130.0
66"		130.0	116.8	130.0
72"		129.1	107.1	130.0
36"	114"	130.0	130.0	130.0
39"		130.0	130.0	130.0
42"		130.0	130.0	130.0
45"		130.0	130.0	130.0
48"		130.0	130.0	130.0
51"		130.0	130.0	130.0
54"		130.0	130.0	130.0
57"		130.0	128.1	130.0
60"		130.0	121.7	130.0
66"		130.0	110.7	130.0
72"		122.3	101.4	130.0
36"	120"	130.0	130.0	130.0
39"		130.0	130.0	130.0
42"		130.0	130.0	130.0
45"		130.0	130.0	130.0
48"		130.0	130.0	130.0
51"		130.0	130.0	130.0
54"		130.0	128.5	130.0
57"		130.0	121.7	130.0
60"		130.0	115.6	130.0
66"		126.8	105.1	130.0
72"		116.2	96.4	130.0

ANCHOR LOAD CAPACITY – PSF EXT.(+) & INT.(–)				
NOMINAL DIMS.		ANCHOR TYPES		
WIDTH (W)	FRAME HEIGHT	A	B	C
36"	126"	130.0	130.0	130.0
39"		130.0	130.0	130.0
42"		130.0	130.0	130.0
45"		130.0	130.0	130.0
48"		130.0	130.0	130.0
51"		130.0	129.6	130.0
54"		130.0	122.4	130.0
57"		130.0	115.9	130.0
60"		130.0	110.1	130.0
66"		120.7	100.1	130.0
36"	132"	130.0	130.0	130.0
39"		130.0	130.0	130.0
42"		130.0	130.0	130.0
45"		130.0	130.0	130.0
48"		130.0	130.0	130.0
51"		130.0	123.7	130.0
54"		130.0	116.8	130.0
57"		130.0	110.7	130.0
60"		126.8	105.1	130.0
66"		115.2	95.6	130.0
36"	138"	130.0	130.0	130.0
39"		130.0	130.0	130.0
42"		130.0	130.0	130.0
45"		130.0	130.0	130.0
48"		130.0	125.7	130.0
51"		130.0	118.3	130.0
54"		130.0	111.7	130.0
57"		127.6	105.8	130.0
60"		121.3	100.6	130.0
36"	144"	130.0	130.0	130.0
39"		130.0	130.0	130.0
42"		130.0	130.0	130.0
45"		130.0	128.5	130.0
48"		130.0	120.5	130.0
51"		130.0	113.4	130.0
54"		129.1	107.1	130.0
57"		122.3	101.4	130.0
60"		116.2	96.4	130.0
36"	150"	130.0	130.0	130.0
39"		130.0	130.0	130.0
42"		130.0	130.0	130.0
45"		130.0	123.3	130.0
48"		130.0	115.6	130.0
51"		130.0	108.8	130.0
54"		123.9	102.8	130.0
57"		117.4	97.4	130.0
60"		111.6	92.5	130.0

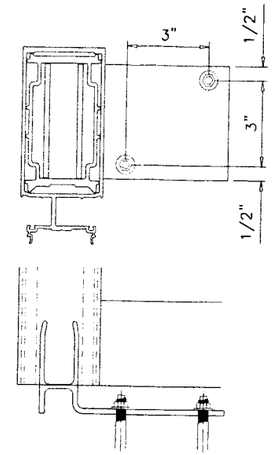

ANCHORS TYPE 'A' & 'B'
JAMB CLIP ANCHORS

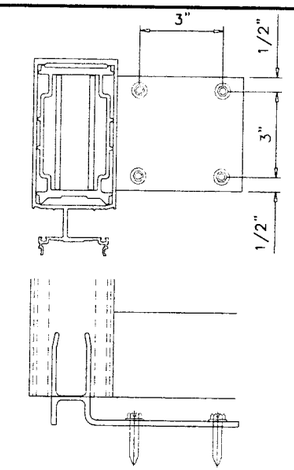

ANCHORS TYPE 'C'
JAMB CLIP ANCHORS

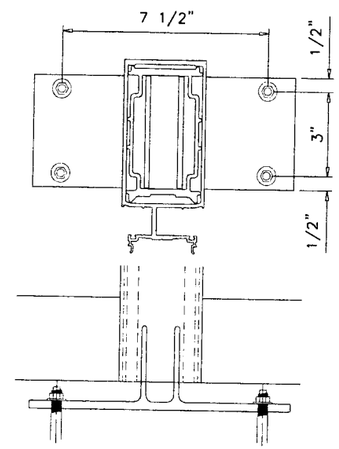

ANCHORS TYPE 'A'
MULLION CLIP ANCHORS

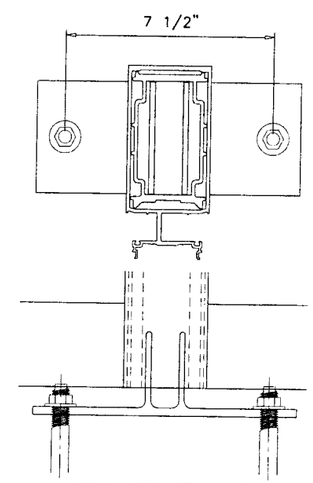

ANCHORS TYPE 'B'
MULLION CLIP ANCHORS

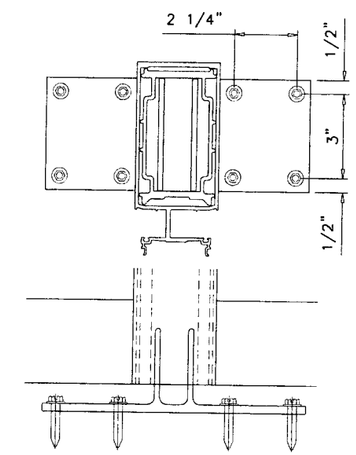

ANCHORS TYPE 'C'
MULLION CLIP ANCHORS

ANCHOR 'A'
DIRECTLY INTO CONCRETE
3/8" DIA. KWIK BOLT-3 EXPANSION ANCHOR
(2) PER SIDE
WITH 2-1/2" MIN. EMBED INTO CONCRETE.
2-3/4" MIN. EDGE DIST.
3" MIN. SPACING

ANCHOR 'B'
DIRECTLY INTO CONCRETE
5/8" DIA. KWIK BOLT-3 EXPANSION ANCHOR
(1) PER SIDE
WITH 4" MIN. EMBED INTO CONCRETE.
4" MIN. EDGE DIST.
7" MIN. SPACING

ANCHOR 'C'
INTO METAL STRUCTURES (STEEL 1/4" MIN. THICKNESS)
5/16" DRIL-FLEX SELF DRILLING SCREWS
(4) PER SIDE
1/2" MIN. EDGE DIST.
3/4" MIN. SPACING

PRODUCT REVISED
as complying with the Florida
Building Code
Acceptance No 09-0408.05
Expiration Date APRIL 11, 2013
By
Miami Dade Product Control
Division

Engr: DR. HUMAYOUN FARJOO
STRUCTURES
FLA. PE # 16557
C.A.N. 3538

APR 06 2009

AL-FAROOQ CORPORATION
ENGINEERS & PRODUCT DEVELOPMENT
1235 S.W. 87 AVE
MIAMI, FLORIDA 33174
TEL. (305) 264-8100 FAX. (305) 262-6978
COMP-ANL\W06-87YKK

YHC-300 IG ALUMINUM CURTAIN WALL SYSTEM (L.M.I.)

YKK AP AMERICA INC.
332 FIRETOWER ROAD
DUBLIN, GEORGIA 31021
TEL.(478) 277-1955 FAX(478) 277-1978

revisions:			
no	date	by	description

date: 12-27-06
scale: –
dr. by: HAMID
chk. by:

drawing no.
W06-87

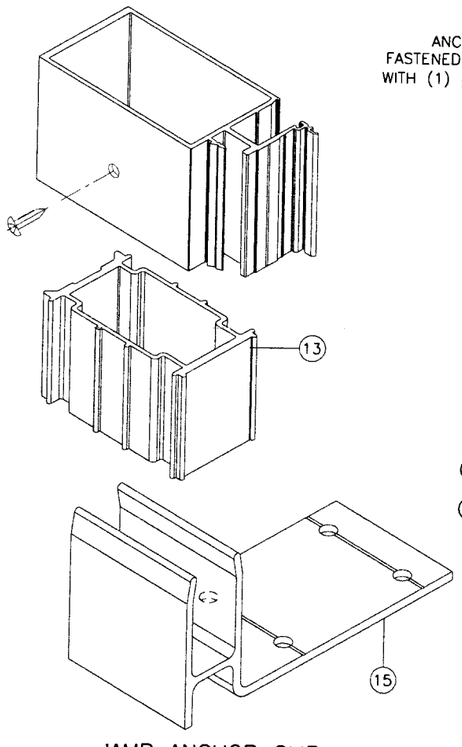

JAMB ANCHOR CLIP
DETAIL '1'

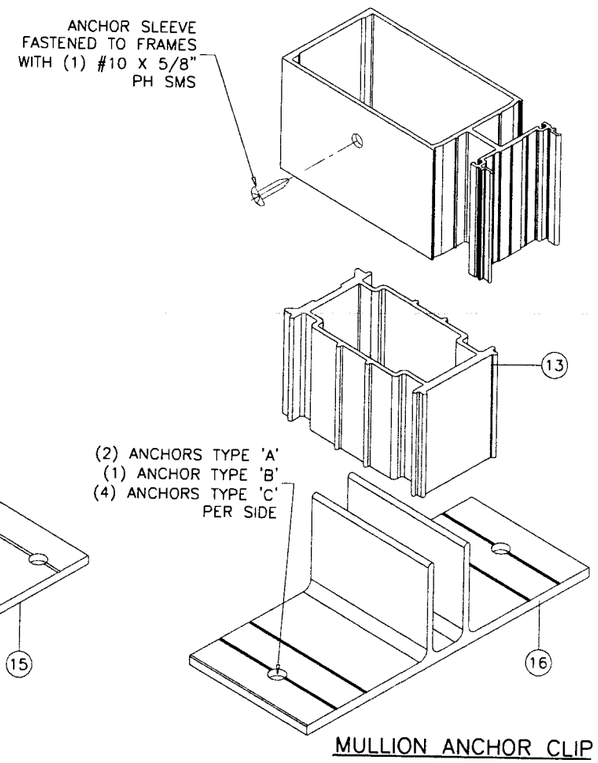

MULLION ANCHOR CLIP
DETAIL '2'

PRODUCT REVISED
as complying with the Florida
Building Code
Acceptance No 09-0408.05
Expiration Date APRIL 11, 2013
By
Miami Dade Product Control
Division

Engr: DR. HUMAYOUN FAROOQ
STRUCTURES
FLA. PE # 16557
C.A.N. 3538

APR 0 6 2009

AL-FAROOQ CORPORATION
ENGINEERS & PRODUCT DEVELOPMENT
1235 S.W. 87 AVE
MIAMI, FLORIDA 33174
TEL. (305) 264-8100 FAX. (305) 262-6978
COMP-ANL\W06-87YKK

YHC-300 IG ALUMINUM CURTAIN WALL SYSTEM (L.M.I.)

YKK ap™
YKK AP AMERICA INC.
332 FIRETOWER ROAD
DUBLIN, GEORGIA 31021
TEL.(478) 277-1955 FAX(478) 277-1978

revisions:

no	date	by	description

date: 12-27-06
scale: -
dr. by: HAMID
chk. by:

drawing no.
W06-87

sheet 4.1 of 22

JAMB/MULLION LOAD CAPACITY - PSF WITHOUT INTERMEDIATE HORIZONTALS		
NOMINAL DIMS.		JAMB 'J1' MULLION 'M1'
WIDTH (W)	FRAME HEIGHT	EXT. (+) INT. (-)
42"	78"	130.0
45"		130.0
48"		130.0
51"		130.0
54"		130.0
57"		130.0
60"		130.0
63"		130.0
66"		130.0
69"		130.0
72"		130.0
42"	84"	130.0
45"		130.0
48"		130.0
51"		130.0
54"		130.0
57"		130.0
60"		130.0
63"		130.0
66"		130.0
69"		130.0
42"	90"	130.0
45"		130.0
48"		130.0
51"		130.0
54"		130.0
57"		130.0
60"		130.0
63"		130.0
66"		130.0
42"	96"	130.0
45"		130.0
48"		130.0
51"		130.0
54"		130.0
57"		130.0
60"		128.9
42"	100-1/2"	130.0
45"		130.0
48"		130.0
51"		130.0
54"		125.3
57"		120.2
60"		111.7

SINGLE SPAN TABLES

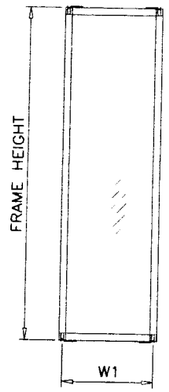

WIDTH (W) = W1 (JAMB)

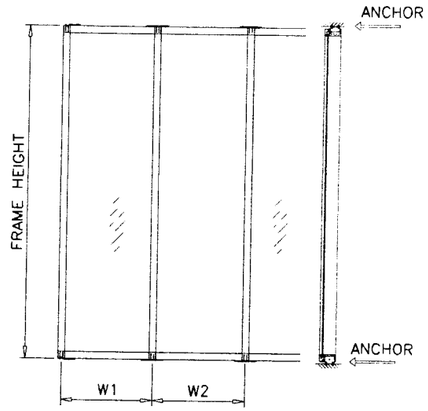

$$\text{WIDTH (W)} = \frac{W1 + W2}{2}$$

JAMB 'J1'

MULLION 'M1'

DOOR JAMB MULLION CAPACITY

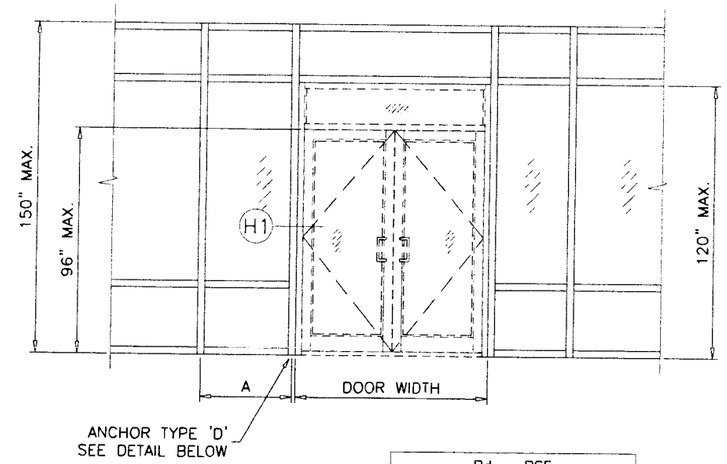

MAX. DOOR WIDTH	A/2	Pd - PSF ANCHORS TYPE 'A' & 'C'	Pd - PSF ANCHORS TYPE 'B'
96"	17"	90.0	82.0
84"	21"	90.0	82.0
72"	25.5"	90.0	82.0

NOTE:
FOR DOOR HEIGHT LESS THAN 96 IN. ABOVE TABLE.

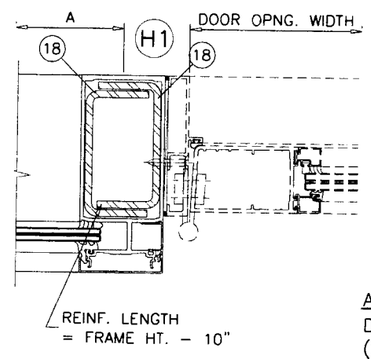

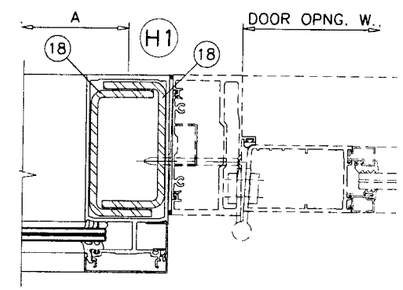

ANCHOR 'D'
DIRECTLY INTO CONCRETE
(2) 5/8" DIA. KWIK BOLT-3 EXPANSION ANCHOR
WITH 4" MIN. EMBED INTO CONCRETE.
6" MIN. EDGE DIST.
3" MIN. SPACING

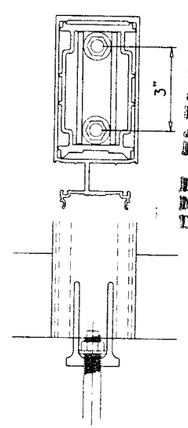

ANCHORS TYPE 'D'

PRODUCT REVISED
as complying with the Florida
Building Code
Acceptance No 09-0408.05
Expiration Date APRIL 11, 2013
By
Miami Dade Product Control
Division

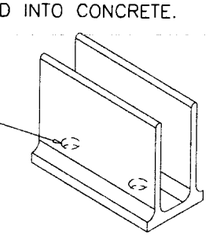

DOOR MULLION ANCHOR CLIP
DETAIL '2A'

Engr: DR. HUMAYOUN FAROOQ
STRUCTURES
FLA. PE # 16557
C.A.N. 3538

APR 0 6 2009

AL-FAROOQ CORPORATION
ENGINEERS & PRODUCT DEVELOPMENT
1235 S.W. 87 AVE
MIAMI, FLORIDA 33174
TEL. (305) 264-8100 FAX. (305) 262-6978

COMP-ANL\W06-87YKK

YHC-300 IG ALUMINUM CURTAIN WALL SYSTEM (L.M.I.)

YKK AP AMERICA INC.
332 FIRETOWER ROAD
DUBLIN, GEORGIA 31021
TEL.(478) 277-1955 FAX(478) 277-1978

revisions:			
no	date	by	description

date: 12-27-06
scale: -
dr. by: HAMID
chk. by:

drawing no.
W06-87

JAMB/MULLION LOAD CAPACITY - PSF
WITH INTERMEDIATE HORIZONTALS

NOMINAL DIMS.		JAMB 'J1' MULLION 'M1'	JAMB 'J2' MULLION 'M2'	JAMB 'J3' MULLION 'M3'
WIDTH (W)	FRAME HEIGHT	EXT. (+) INT. (-)	EXT. (+) INT. (-)	EXT. (+) INT. (-)
42"	78"	130.0	130.0	130.0
45"		130.0	130.0	130.0
48"		130.0	130.0	130.0
51"		130.0	130.0	130.0
54"		130.0	130.0	130.0
57"		130.0	130.0	130.0
60"		130.0	130.0	130.0
63"		130.0	130.0	130.0
66"		130.0	130.0	130.0
69"		130.0	130.0	130.0
72"		130.0	130.0	130.0
42"	84"	130.0	130.0	130.0
45"		130.0	130.0	130.0
48"		130.0	130.0	130.0
51"		130.0	130.0	130.0
54"		130.0	130.0	130.0
57"		130.0	130.0	130.0
60"		130.0	130.0	130.0
63"		130.0	130.0	130.0
66"		130.0	130.0	130.0
69"		130.0	130.0	130.0
72"		–	90.0	130.0
42"	90"	130.0	130.0	130.0
45"		130.0	130.0	130.0
48"		130.0	130.0	130.0
51"		130.0	130.0	130.0
54"		130.0	130.0	130.0
57"		130.0	130.0	130.0
60"		130.0	130.0	130.0
63"		124.2	124.2	130.0
66"		118.6	118.6	130.0
69"		–	90.0	130.0
72"		–	90.0	130.0
42"	96"	130.0	130.0	130.0
45"		130.0	130.0	130.0
48"		130.0	130.0	130.0
51"		130.0	130.0	130.0
54"		126.8	126.8	130.0
57"		120.1	120.1	130.0
60"		114.1	114.1	130.0
63"		–	90.0	130.0
66"		–	90.0	130.0
69"		–	90.0	130.0
72"		–	90.0	130.0
42"	100-1/2"	130.0	130.0	130.0
45"		130.0	130.0	130.0
48"		129.7	129.7	130.0
51"		122.1	122.1	130.0
54"		115.3	115.3	130.0
57"		109.2	109.2	130.0
60"		103.8	103.8	130.0
63"		–	90.0	130.0
66"		–	90.0	130.0
69"		–	90.0	130.0
72"		–	90.0	130.0

JAMB/MULLION LOAD CAPACITY - PSF
WITH INTERMEDIATE HORIZONTALS

NOMINAL DIMS.		JAMB 'J2' MULLION 'M2'	JAMB 'J3' MULLION 'M3'
WIDTH (W)	FRAME HEIGHT	EXT. (+) INT. (-)	EXT. (+) INT. (-)
42"	102"	90.0	130.0
45"		90.0	130.0
48"		90.0	130.0
51"		90.0	130.0
54"		90.0	130.0
57"		90.0	130.0
60"		90.0	130.0
63"		90.0	130.0
66"		90.0	130.0
69"		90.0	130.0
72"		90.0	130.0
42"	108"	90.0	130.0
45"		90.0	130.0
48"		90.0	130.0
51"		90.0	130.0
54"		90.0	130.0
57"		90.0	130.0
60"		90.0	130.0
63"		90.0	130.0
66"		90.0	130.0
69"		90.0	130.0
72"		90.0	130.0
42"	114"	90.0	130.0
45"		90.0	130.0
48"		90.0	130.0
51"		90.0	130.0
54"		90.0	130.0
57"		90.0	130.0
60"		90.0	130.0
63"		90.0	130.0
66"		90.0	130.0
69"		90.0	130.0
72"		90.0	130.0
42"	120"	90.0	130.0
45"		90.0	130.0
48"		90.0	130.0
51"		90.0	130.0
54"		90.0	130.0
57"		90.0	130.0
60"		90.0	130.0
63"		90.0	130.0
66"		90.0	130.0
69"		90.0	130.0
72"		90.0	130.0
42"	126"	90.0	130.0
45"		90.0	130.0
48"		90.0	130.0
51"		90.0	130.0
54"		90.0	130.0
57"		90.0	130.0
60"		90.0	130.0
63"		90.0	130.0
66"		90.0	130.0
69"		90.0	130.0

JAMB/MULLION LOAD CAPACITY - PSF
WITH INTERMEDIATE HORIZONTALS

NOMINAL DIMS.		JAMB 'J2' MULLION 'M2'	JAMB 'J3' MULLION 'M3'
WIDTH (W)	FRAME HEIGHT	EXT. (+) INT. (-)	EXT. (+) INT. (-)
42"	132"	90.0	130.0
45"		90.0	130.0
48"		90.0	130.0
51"		90.0	130.0
54"		90.0	130.0
57"		90.0	130.0
60"		90.0	130.0
63"		90.0	130.0
66"		90.0	130.0
42"	138"	90.0	130.0
45"		90.0	130.0
48"		90.0	130.0
51"		90.0	130.0
54"		90.0	130.0
57"		90.0	130.0
60"		90.0	130.0
63"		90.0	130.0
42"	144"	90.0	–
45"		90.0	–
48"		90.0	–
51"		90.0	–
54"		90.0	–
57"		90.0	–
60"		90.0	–
42"	150"	90.0	–
45"		90.0	–
48"		90.0	–
51"		90.0	–
54"		90.0	–
57"		90.0	–
60"		90.0	–

SINGLE SPAN TABLES

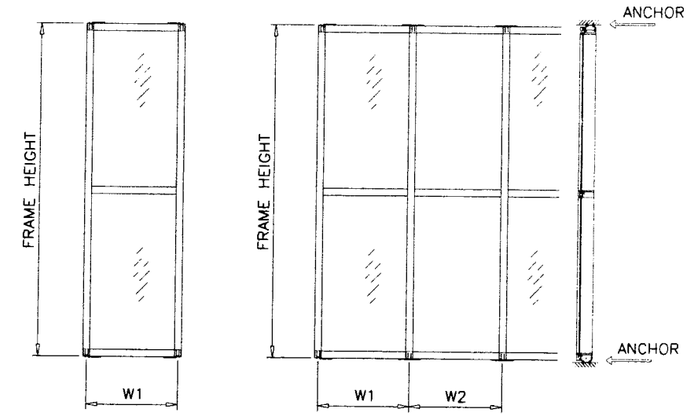

WIDTH (W) = W1 (JAMB)

WIDTH (W) = $\frac{W1 + W2}{2}$

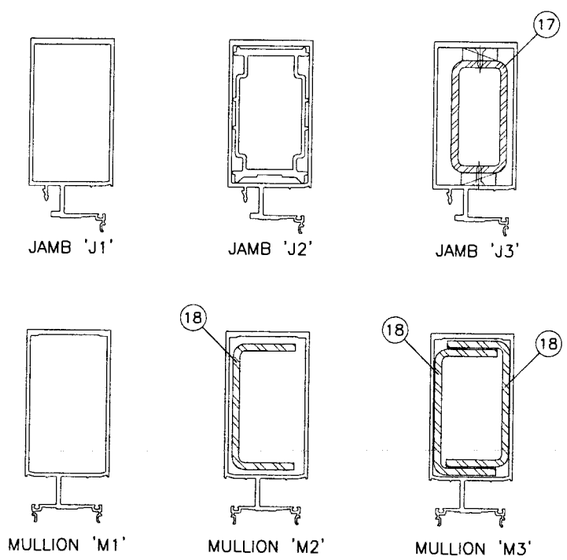

REINFORCING LENGTH = FRAME HEIGHT - 12 IN.

PRODUCT REVISED
as complying with the Florida
Building Code
Acceptance No 09-0408.05
Expiration Date APRIL 11, 2013
By
Miami-Dade Product Control
Division

Engr: DR. HUMAYOUN FAROOQ
STRUCTURES
FLA. PE # 16557
C.A.N. 3538

APR 06 2009

AL-FAROOQ CORPORATION
ENGINEERS & PRODUCT DEVELOPMENT
1235 S.W. 87 AVE
MIAMI, FLORIDA 33174
TEL. (305) 264-8100 FAX. (305) 262-6978
COMP-ANL\W06-87YKK

YKK AP AMERICA INC.
332 FIRETOWER ROAD
DUBLIN, GEORGIA 31021
TEL.(478) 277-1955 FAX(478) 277-1978

YHC-300 IG ALUMINUM CURTAIN WALL SYSTEM (L.M.I.)

revisions:

no	date	by	description

date: 12-27-06
scale: –
dr. by: HAMID
chk. by:

drawing no.
W06-87

UN REINFORCED JAMB & MULLION
TWIN SPAN TABLES

MULLION LOAD CAPACITY - PSF TWIN SPANS		
NOMINAL DIMS.		WITHOUT REINF.
AVG. MULL SPACING	SPAN = L	EXT. (+) INT.(-)
30"	108"	90.0
36"		90.0
42"		90.0
48"		90.0
54"		90.0
60"		90.0
66"		90.0
72"		90.0
30"	114"	90.0
36"		90.0
42"		90.0
48"		90.0
54"		90.0
60"		90.0
66"		90.0
72"		90.0
30"	120"	90.0
36"		90.0
42"		90.0
48"		90.0
54"		90.0
60"		90.0
66"		90.0
72"		84.5
30"	126"	90.0
36"		90.0
42"		90.0
48"		90.0
54"		90.0
60"		90.0
66"		83.8
30"	132"	90.0
36"		90.0
42"		90.0
48"		90.0
54"		90.0
60"		84.3
66"		76.6
30"	138"	90.0
36"		90.0
42"		90.0
48"		90.0
54"		85.9
60"		77.3
30"	144"	90.0
36"		90.0
42"		90.0
48"		89.0
54"		79.1
60"		71.2

MULLION LOAD CAPACITY - PSF TWIN SPANS		
NOMINAL DIMS.		WITHOUT REINF.
AVG. MULL SPACING	SPAN = L	EXT. (+) INT.(-)
30"	150"	90.0
36"		90.0
42"		90.0
48"		82.2
54"		73.1
60"		65.8

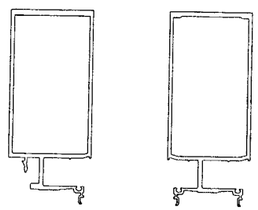

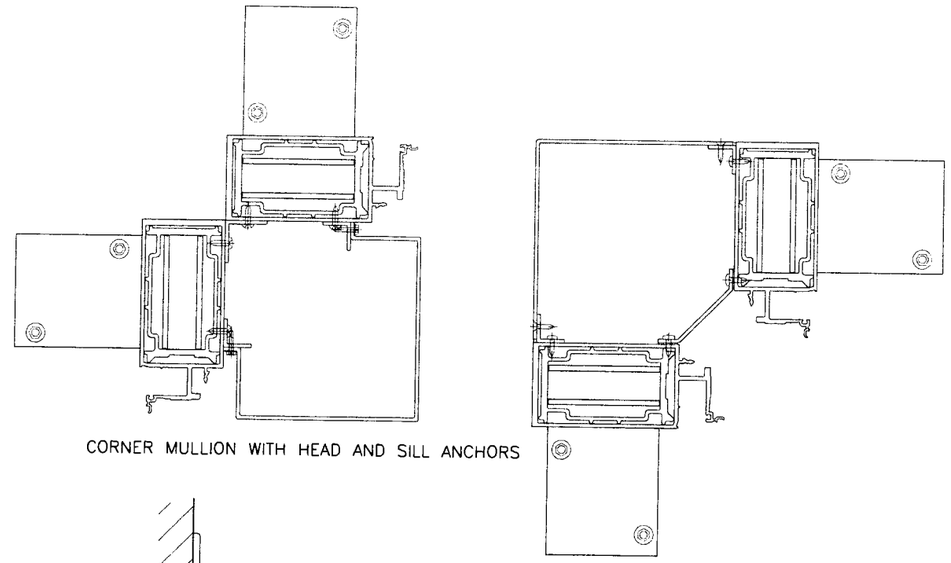

CORNER MULLION WITH HEAD AND SILL ANCHORS

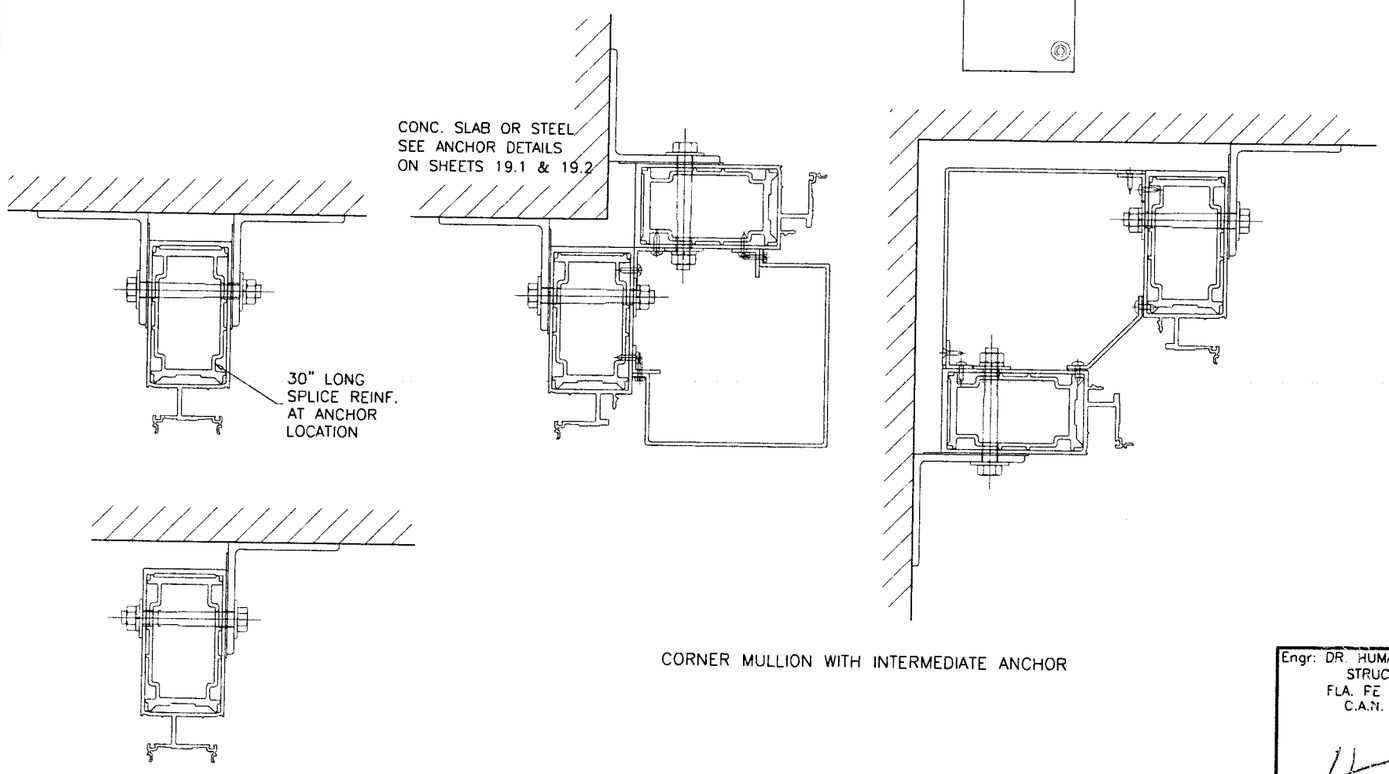

CORNER MULLION WITH INTERMEDIATE ANCHOR

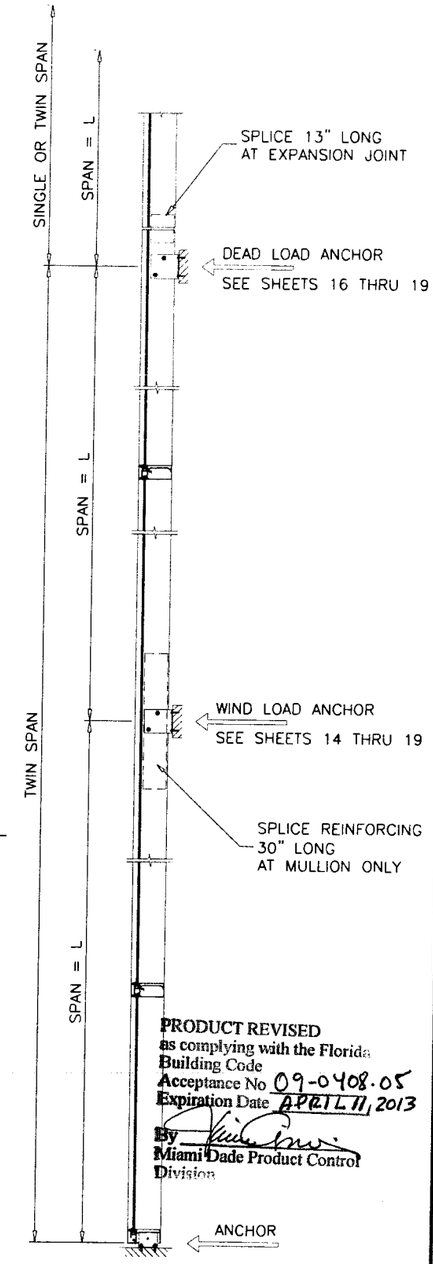

PRODUCT REVISED
as complying with the Florida
Building Code
Acceptance No 09-0408.05
Expiration Date APRIL 11, 2013
By
Miami Dade Product Control
Division

NOTE:
THIS TABLE IS APPLICABLE FOR TWIN SPAN WITHOUT EXPANSION JOINT.
FOR SINGLE SPAN CAPACITY SEE TABLES ON SHEETS 5 & 6.

Engr: DR. HUMAYOUN FAROOQ
STRUCTURES
FLA. PE # 16557
C.A.N. 3538

APR 06 2009

AL-FAROOQ CORPORATION
ENGINEERS & PRODUCT DEVELOPMENT
1235 S.W. 87 AVE
MIAMI, FLORIDA 33174
TEL. (305) 264-8100 FAX. (305) 262-6978
COMP-ANL\W06-87YKK

YKK AP AMERICA INC.
332 FIRETOWER ROAD
DUBLIN, GEORGIA 31021
TEL.(478) 277-1955 FAX(478) 277-1978

YHC-300 IG ALUMINUM CURTAIN WALL SYSTEM (L.M.I.)

revisions:			
no	date	by	description

date: 12-27-06
scale: -
dr. by: HAMID
chk. by:

drawing no.
W06-87

REINFORCED JAMB & MULLION TWIN SPAN TABLES

MULLION LOAD CAPACITY - PSF MULTIPLE SPANS		
NOMINAL DIMS.		WITH REINF.
AVG. MULL SPACING	SPAN = L	EXT. (+) INT.(−)
30"	108"	130.0
36"		130.0
42"		130.0
48"		130.0
54"		130.0
60"		130.0
66"		130.0
72"		130.0
30"	114"	130.0
36"		130.0
42"		130.0
48"		130.0
54"		130.0
60"		130.0
66"		130.0
72"		130.0
30"	120"	130.0
36"		130.0
42"		130.0
48"		130.0
54"		130.0
60"		130.0
66"		130.0
72"		130.0
30"	126"	130.0
36"		130.0
42"		130.0
48"		130.0
54"		130.0
60"		130.0
66"		130.0
30"	132"	130.0
36"		130.0
42"		130.0
48"		130.0
54"		130.0
60"		130.0
66"		130.0
30"	138"	130.0
36"		130.0
42"		130.0
48"		130.0
54"		130.0
60"		130.0
30"	144"	130.0
36"		130.0
42"		130.0
48"		130.0
54"		130.0
60"		130.0

MULLION LOAD CAPACITY - PSF MULTIPLE SPANS		
NOMINAL DIMS.		WITH REINF.
AVG. MULL SPACING	SPAN = L	EXT. (+) INT.(−)
30"	150"	130.0
36"		130.0
42"		130.0
48"		130.0
54"		130.0
60"		123.0

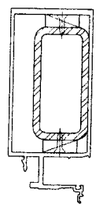

JAMB

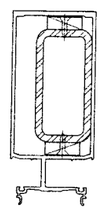

MULLION

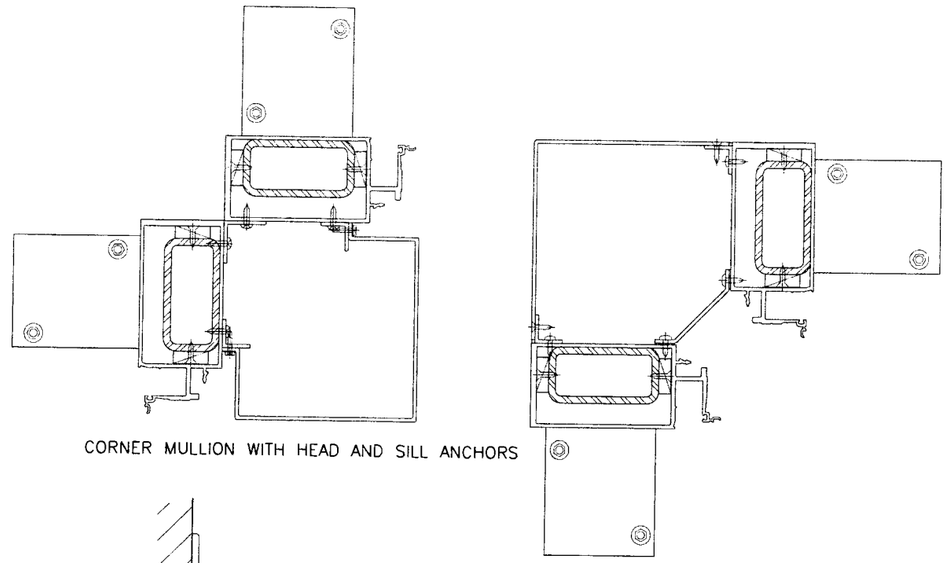

CORNER MULLION WITH HEAD AND SILL ANCHORS

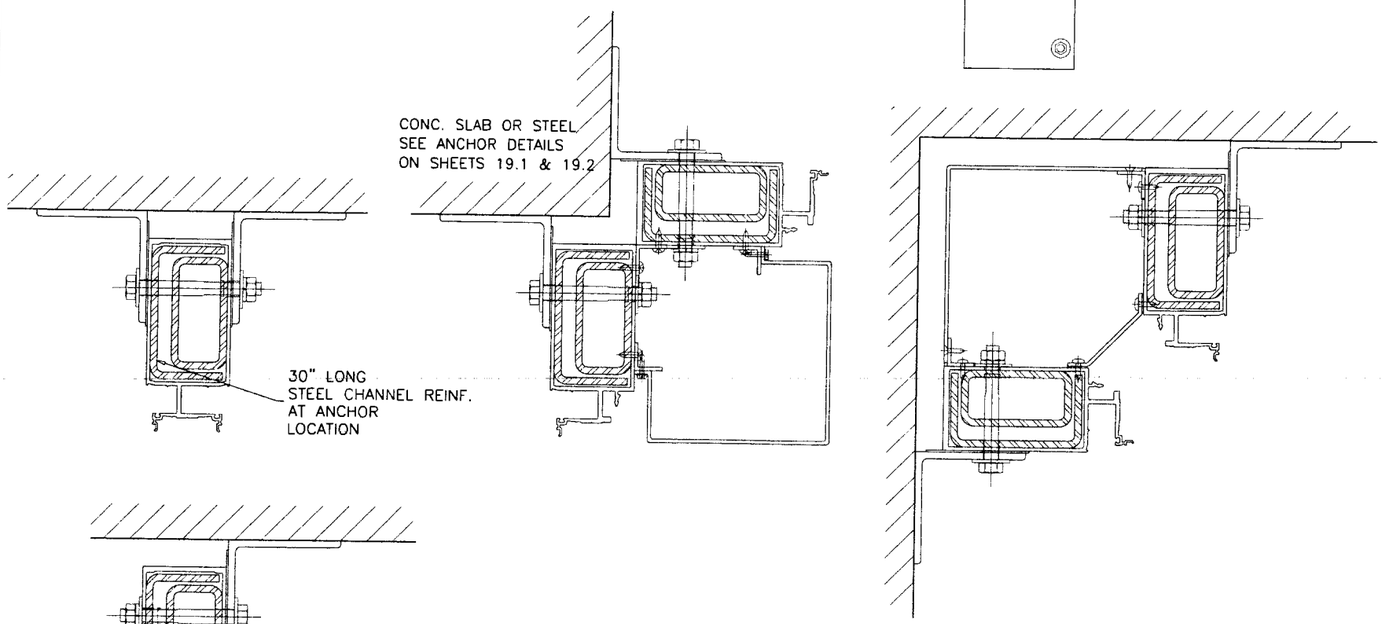

CORNER MULLION WITH INTERMEDIATE ANCHOR

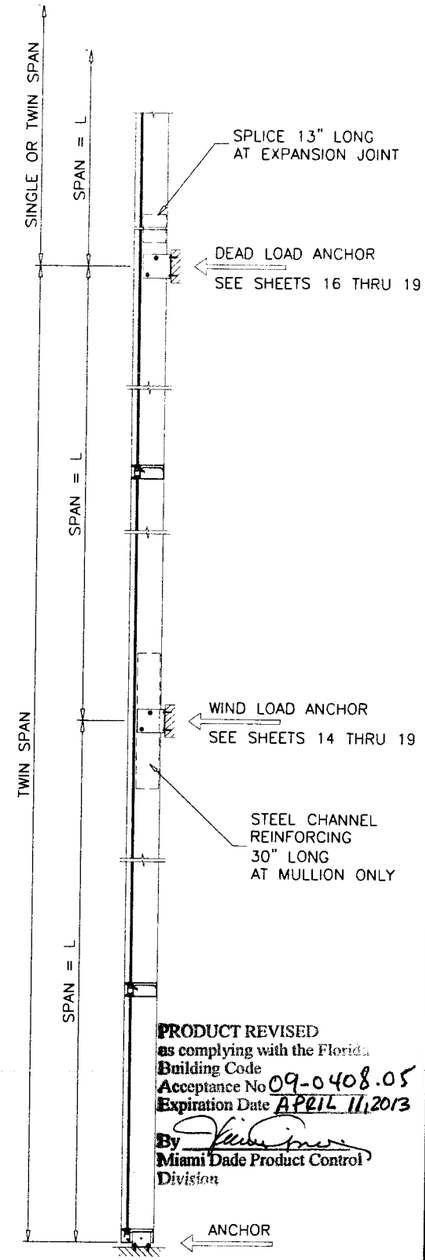

PRODUCT REVISED
as complying with the Florida
Building Code
Acceptance No 09-0408.05
Expiration Date APRIL 11, 2013
By
Miami Dade Product Control
Division

NOTE:
THIS TABLE IS APPLICABLE FOR TWIN SPAN WITHOUT EXPANSION JOINT.
FOR SINGLE SPAN CAPACITY SEE TABLES ON SHEETS 5 & 6.

Engr: DR. HUMAYOUN FAROOQ
STRUCTURES
FLA. PE # 16557
C.A.N. 3538

APR 06 2009

AL-FAROOQ CORPORATION
ENGINEERS & PRODUCT DEVELOPMENT
1235 S.W. 87 AVE
MIAMI, FLORIDA 33174
TEL. (305) 264-8100 FAX. (305) 262-6978
COMP-ANL\W06-87YKK

YHC-300 IG ALUMINUM CURTAIN WALL SYSTEM (L.M.I.)

YKK AP AMERICA INC.
332 FIRETOWER ROAD
DUBLIN, GEORGIA 31021
TEL.(478) 277-1955 FAX(478) 277-1978

revisions:			
no	date	by	description

date: 12-27-06
scale: -
dr. by: HAMID
chk. by:

drawing no.
W06-87

CORNER MULLION W/O REINFORCING
SINGLE SPAN WITH HORIZONTAL

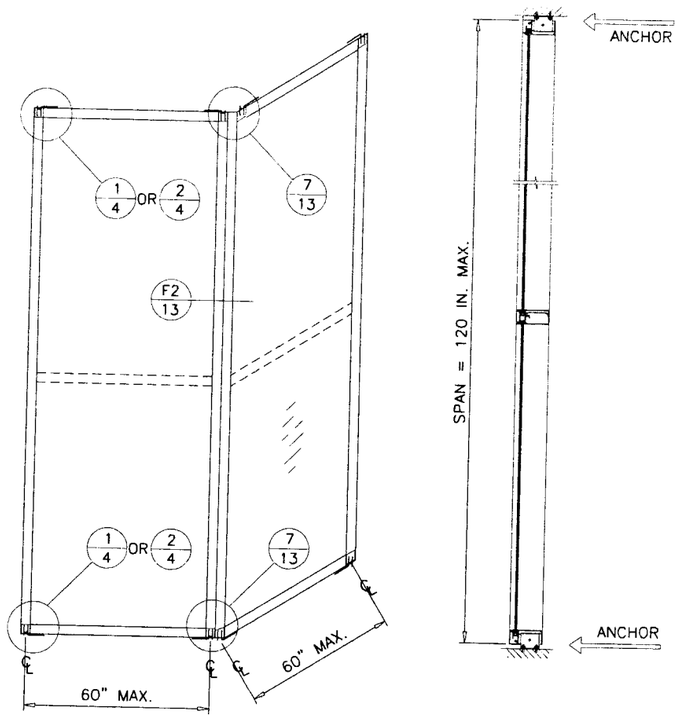

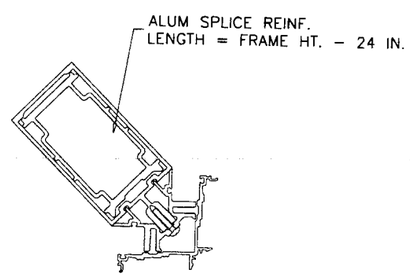

CORNER MULLION
W/ ALUM REINF.

MAX. LOAD = ±100.0 PSF

CORNER MULLION WITH REINFORCING
SINGLE SPAN WITH HORIZONTAL

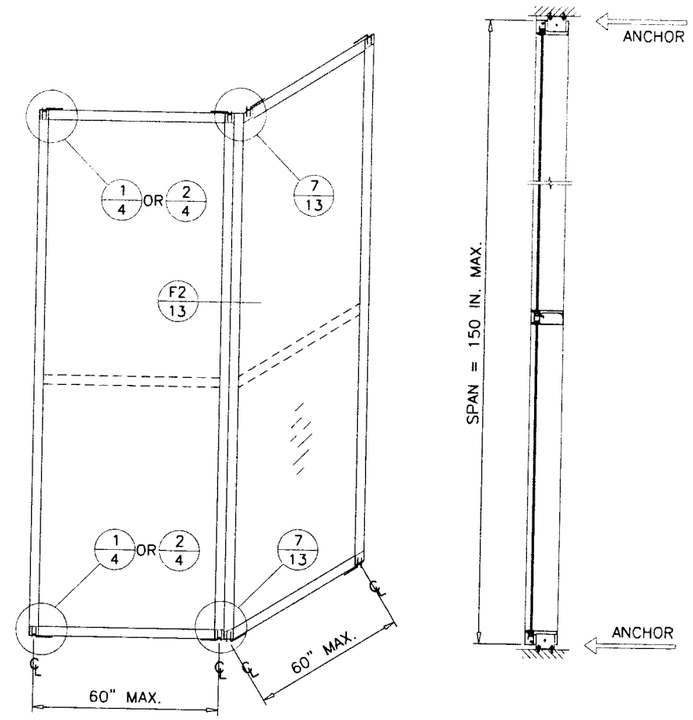

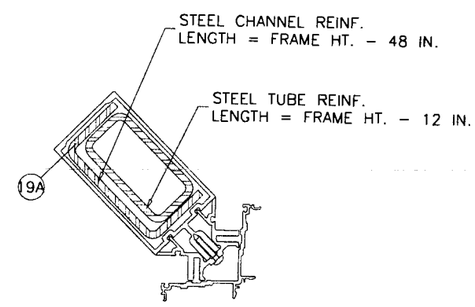

CORNER MULLION
W/ STEEL REINF.

MAX. LOAD = ±120.0 PSF

PRODUCT REVISED
as complying with the Florida
Building Code
Acceptance No 09-0408.05
Expiration Date APRIL 11, 2013
By
Miami Dade Product Control
Division

Engr: DR. HUMAYOUN FAROOQ
STRUCTURES
FLA. PE # 16557
C.A.N. 3538

APR 06 2009

NOTE:

USE 'F' ANCHOR CLIP DETAIL 1/4 AT JAMB AND
'T' ANCHOR CLIP DETAIL 2/4 AT MULLION

YHC-300 IG ALUMINUM CURTAIN WALL SYSTEM (L.M.I.)

YKK ap™
YKK AP AMERICA INC.
332 FIRETOWER ROAD
DUBLIN, GEORGIA 31021
TEL.(478) 277-1955 FAX(478) 277-1978

AL-FAROOQ CORPORATION
ENGINEERS & PRODUCT DEVELOPMENT
1235 S.W. 87 AVE
MIAMI, FLORIDA 33174
TEL. (305) 264-8100 FAX. (305) 262-6978
COMP-ANL\W06-87YKK

revisions:

no	date	by	description

date: 12-27-06
scale: -
dr. by: HAMID
chk. by:

drawing no.
W06-87

sheet 8 of 22

CORNER MULLION W/O REINFORCING
TWIN SPAN WITH HORIZONTAL

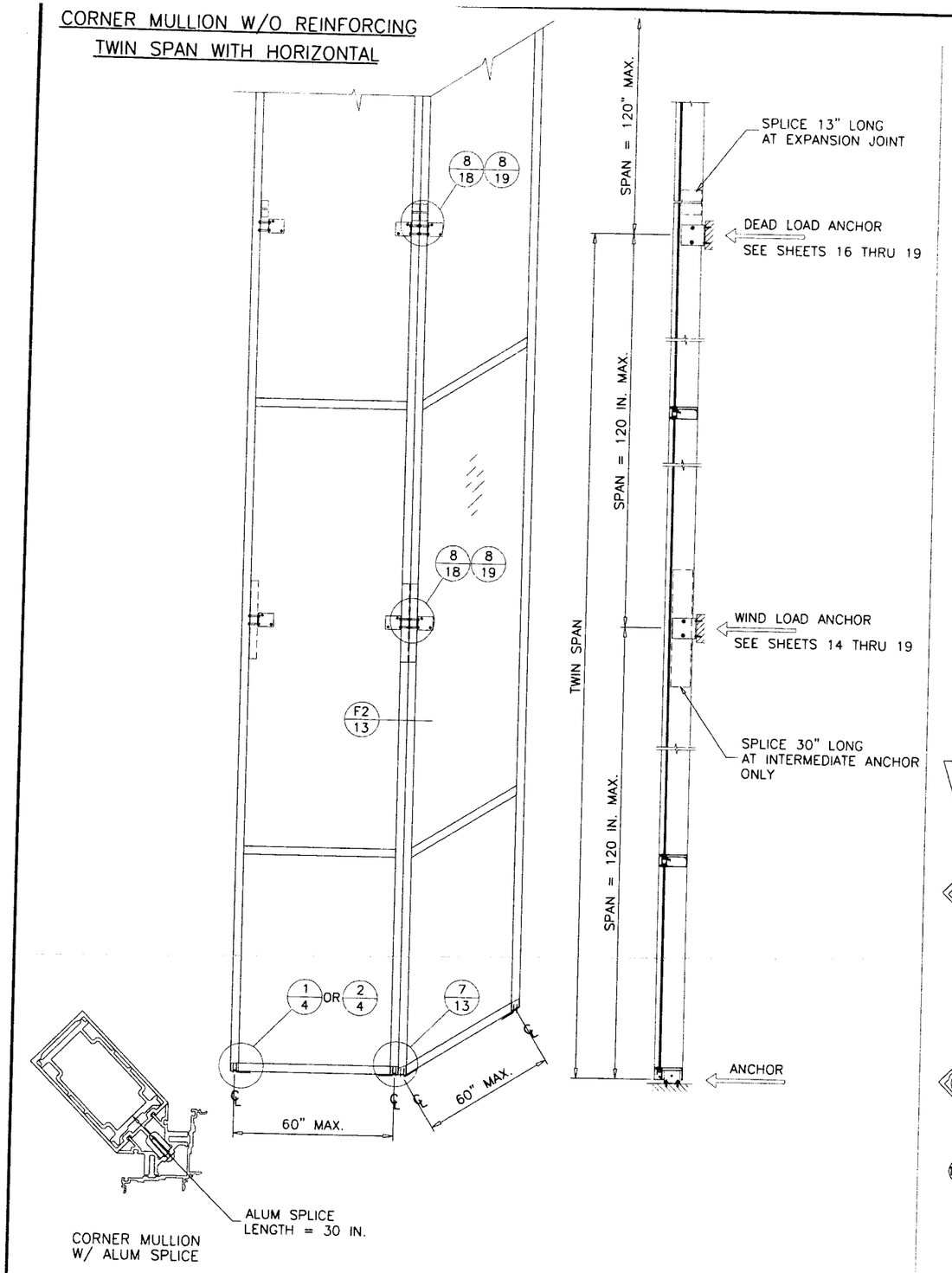

CORNER MULLION
W/ ALUM SPLICE

MAX. LOAD = ±102.0 PSF

CORNER MULLION WITH REINFORCING
TWIN SPAN WITH HORIZONTAL

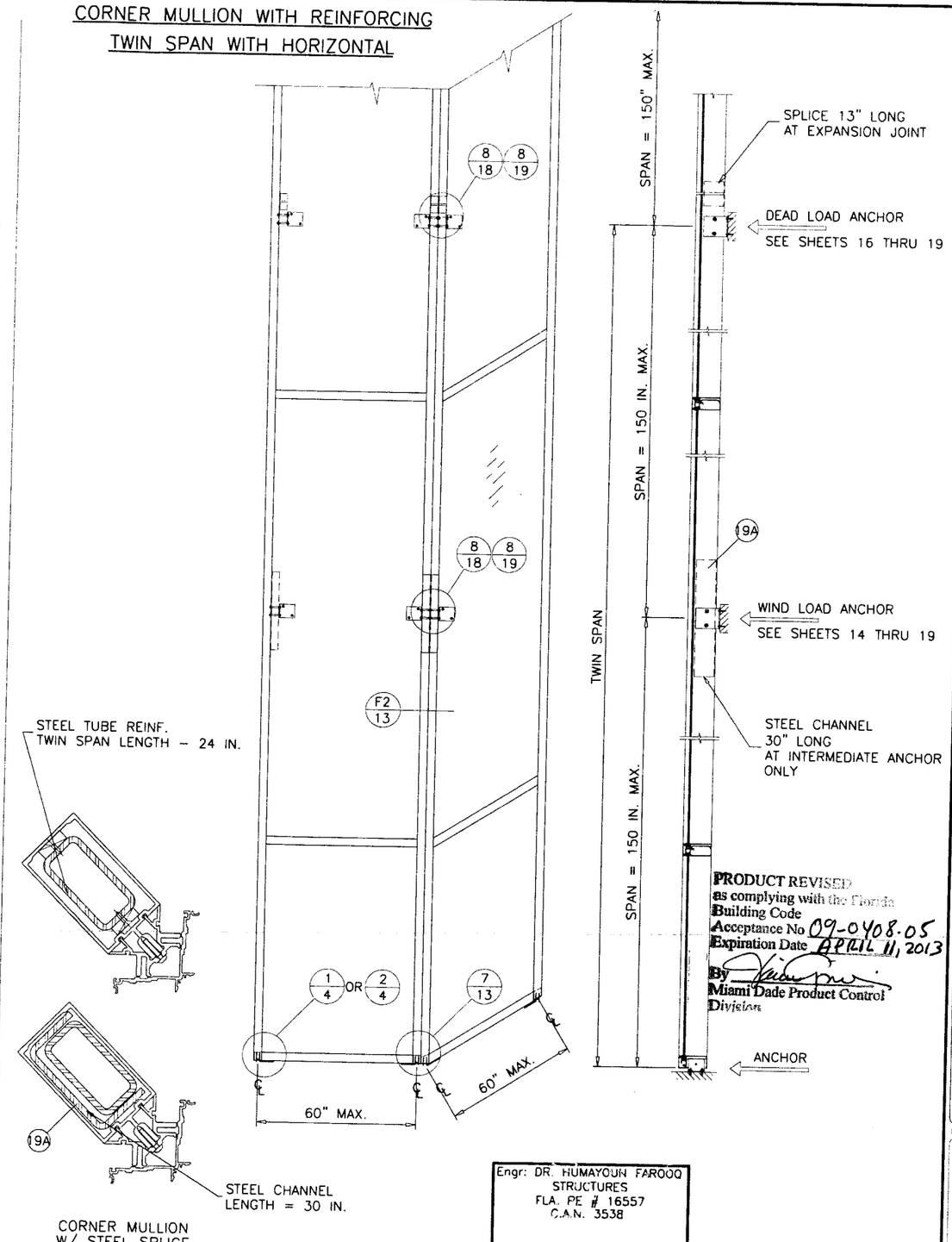

CORNER MULLION
W/ STEEL SPLICE

MAX. LOAD = ±120.0 PSF

PRODUCT REVISED
as complying with the Florida
Building Code
Acceptance No 09-0408.05
Expiration Date APRIL 11, 2013
By
Miami Dade Product Control
Division

NOTE:
USE 'F' ANCHOR CLIP DETAIL 1/4 AT JAMB AND
'T' ANCHOR CLIP DETAIL 2/4 AT MULLION

Engr: DR. HUMAYOUN FAROOQ
STRUCTURES
FLA. PE # 16557
C.A.N. 3538

APR 0 6 2009

AL-FAROOQ CORPORATION
ENGINEERS & PRODUCT DEVELOPMENT
1235 S.W. 87 AVE
MIAMI, FLORIDA 33174
TEL. (305) 264-8100 FAX. (305) 262-6978
COMP-ANL\W06-87YKK

YHC-300 IG ALUMINUM CURTAIN WALL SYSTEM (L.M.I.)

YKK ap™
YKK AP AMERICA INC.
332 FIRETOWER ROAD
DUBLIN, GEORGIA 31021
TEL.(478) 277-1955 FAX(478) 277-1978

revisions:			
no	date	by	description

date: 12-27-06
scale: –
dr. by: HAMID
chk. by:

drawing no.
W06-87

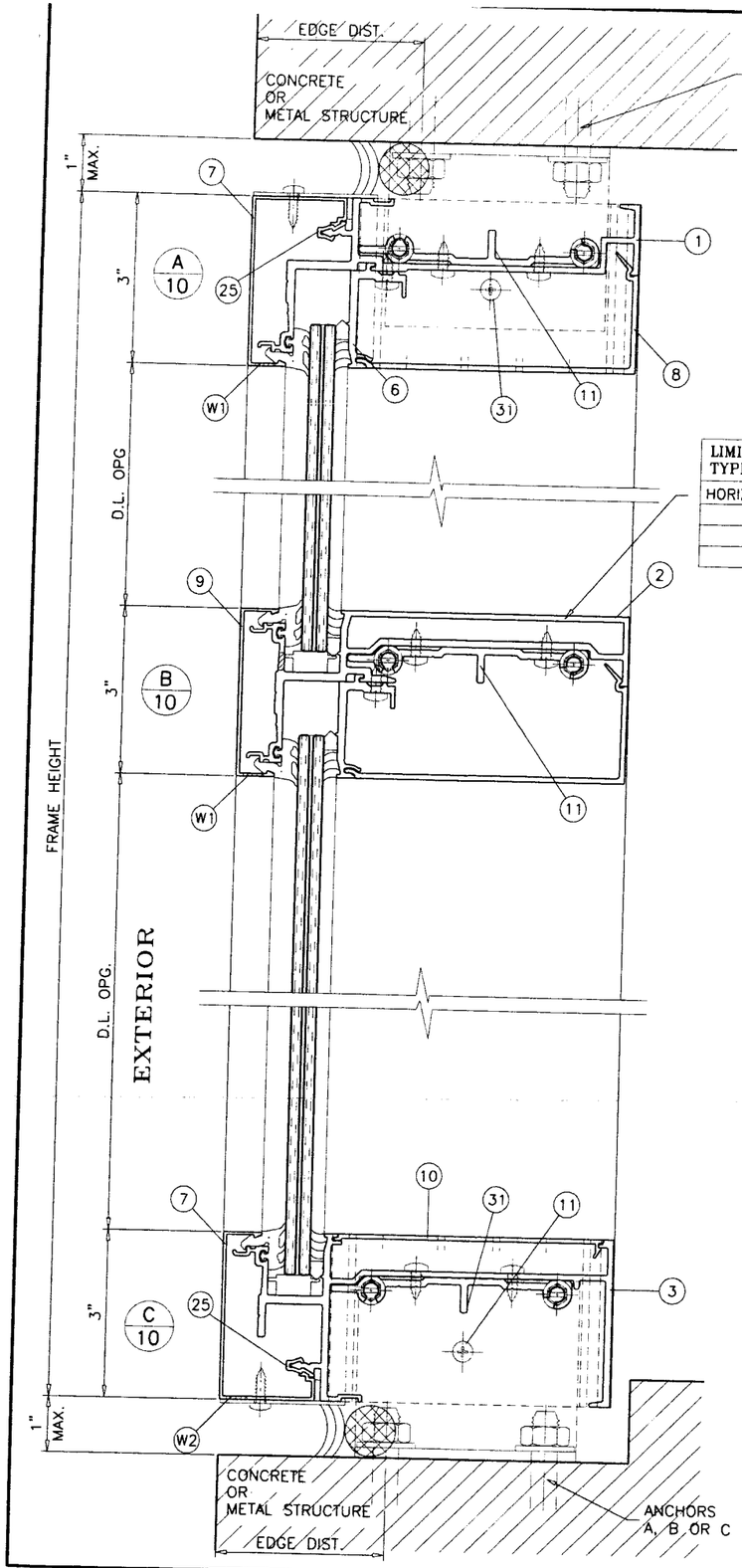

LIMIT MAX. DESIGN LOADS FOR TYPICAL HORIZONTAL AS FOLLOWS	
HORIZ. SPAN MAX.	DESIGN LOAD
60"	130 PSF
66"	84.6 PSF
72"	58.8 PSF

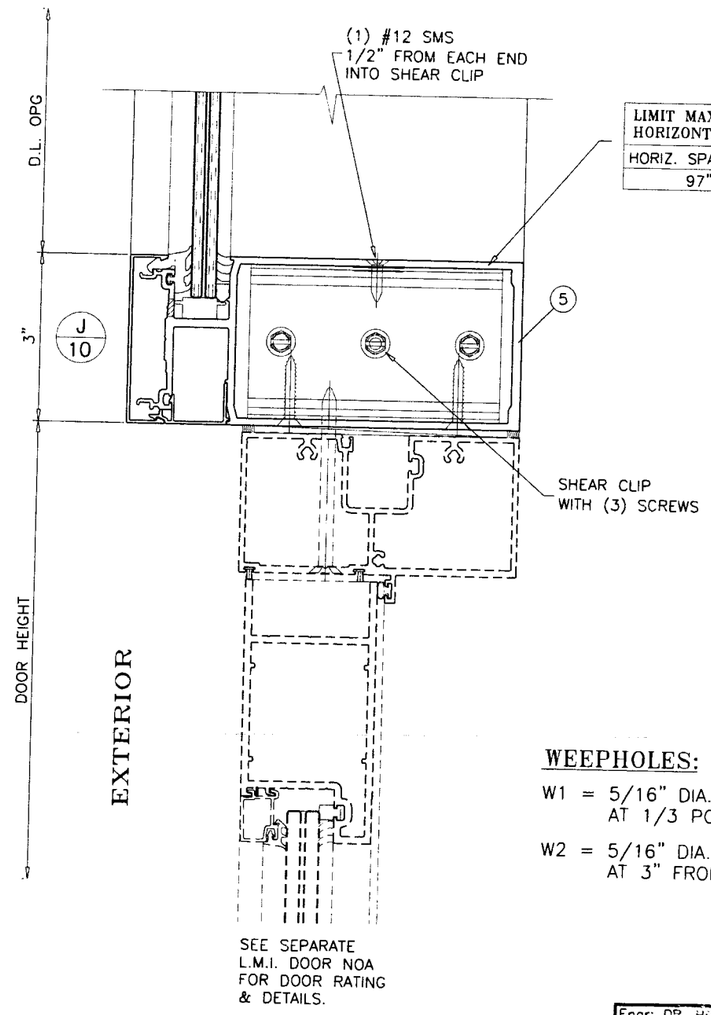

LIMIT MAX. DESIGN LOADS FOR HORIZONTAL ABOVE DOOR AS FOLLOWS	
HORIZ. SPAN MAX.	DESIGN LOAD
97"	90 PSF

CONCRETE AND METAL STRUCTURE NOT BY YKK AMERICA INC. MUST SUSTAIN LOADS IMPOSED BY GLAZING SYSTEM AND TRANSFER THEM TO THE BUILDING STRUCTURE.

PRODUCT REVISED
as complying with the
Building Code
Acceptance No 09-0408.05
Expiration Date APRIL 11, 2013
By
Miami Dade Product Control Division

WEEPHOLES:

W1 = 5/16" DIA. WEEP HOLES TWO PER D.L. OPNG. AT 1/3 POINTS FROM VERTICALS

W2 = 5/16" DIA. WEEP HOLES THREE PER LITE AT 3" FROM VERTICALS AND CENTER OF D.L. OPNG.

Engr: DR. HUMAYOUN FAROOQ
STRUCTURES
FLA. PE # 16557
C.A.N. 3538

APR 06 2009

AL-FAROOQ CORPORATION
ENGINEERS & PRODUCT DEVELOPMENT
1235 S.W. 87 AVE
MIAMI, FLORIDA 33174
TEL. (305) 264-8100 FAX. (305) 262-6978

COMP-ANL\W06-87YKK

YHC-300 IG ALUMINUM CURTAIN WALL SYSTEM (L.M.I.)

YKK AP AMERICA INC.
332 FIRETOWER ROAD
DUBLIN, GEORGIA 31021
TEL.(478) 277-1955 FAX(478) 277-1978

revisions:			
no	date	by	description

date: 12-27-06
scale: 3/8" = 1"
dr. by: HAMID
chk. by:

drawing no. W06-87

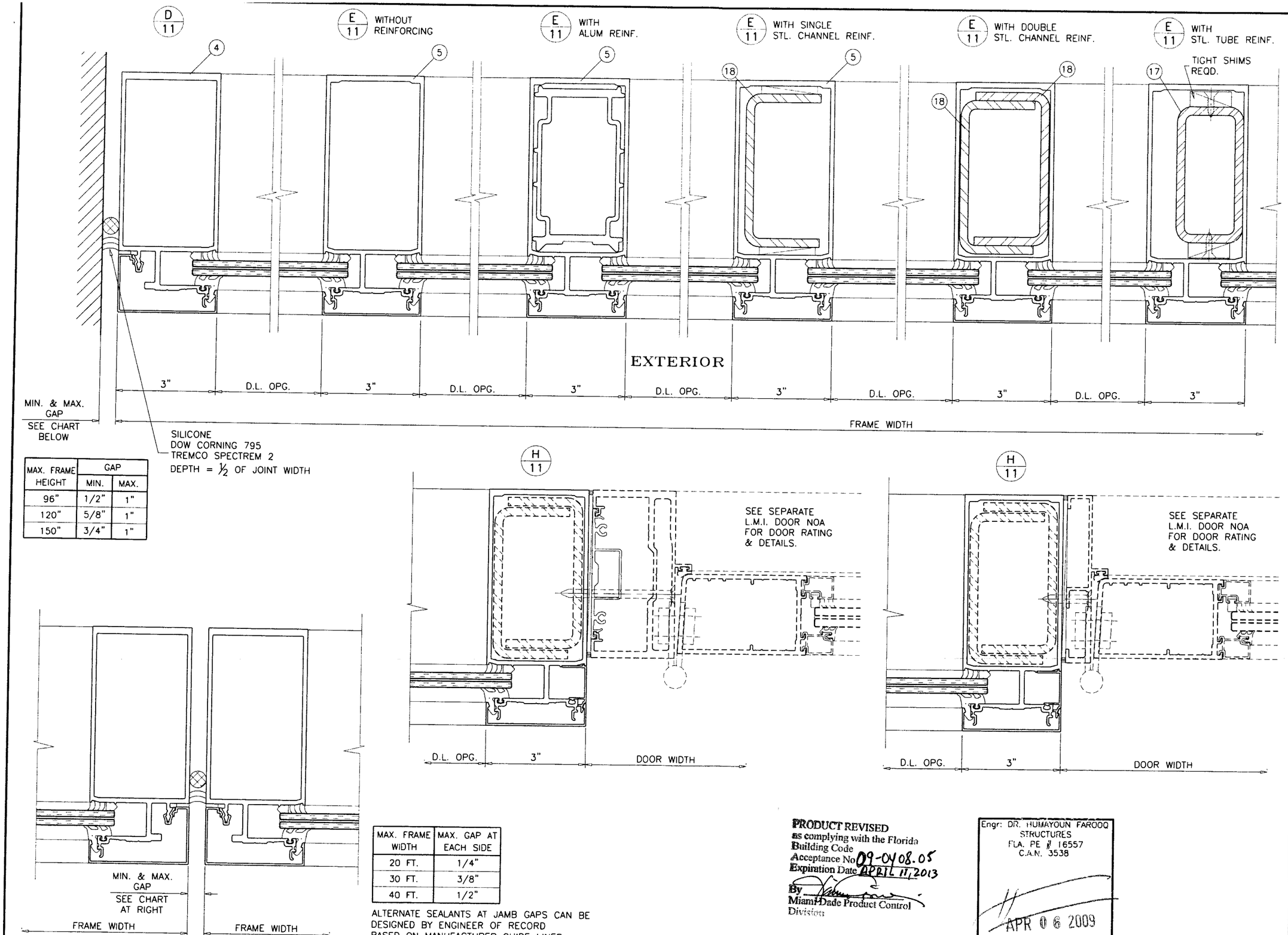

MAX. FRAME HEIGHT	GAP	
	MIN.	MAX.
96"	1/2"	1"
120"	5/8"	1"
150"	3/4"	1"

MAX. FRAME WIDTH	MAX. GAP AT EACH SIDE
20 FT.	1/4"
30 FT.	3/8"
40 FT.	1/2"

ALTERNATE SEALANTS AT JAMB GAPS CAN BE DESIGNED BY ENGINEER OF RECORD BASED ON MANUFACTURER GUIDE LINES.

PRODUCT REVISED
as complying with the Florida Building Code
Acceptance No 09-0408.05
Expiration Date APRIL 11, 2013
By _____
Miami-Dade Product Control Division

Engr: DR. HUMAYOUN FAROOQ
STRUCTURES
FLA. PE # 16557
C.A.N. 3538

APR 06 2009

AL-FAROOQ CORPORATION
ENGINEERS & PRODUCT DEVELOPMENT
1235 S.W. 87 AVE
MIAMI, FLORIDA 33174
TEL. (305) 264-8100 FAX. (305) 262-6978
COMP-ANL\W06-87YKK

YHC-300 IG ALUMINUM CURTAIN WALL SYSTEM (L.M.I.)

YKK AP AMERICA INC.
332 FIRETOWER ROAD
DUBLIN, GEORGIA 31021
TEL.(478) 277-1955 FAX(478) 277-1978

revisions:			
no	date	by	description

date: 12-27-06
scale: 3/8" = 1"
dr. by: HAMID
chk. by:

drawing no. W06-87

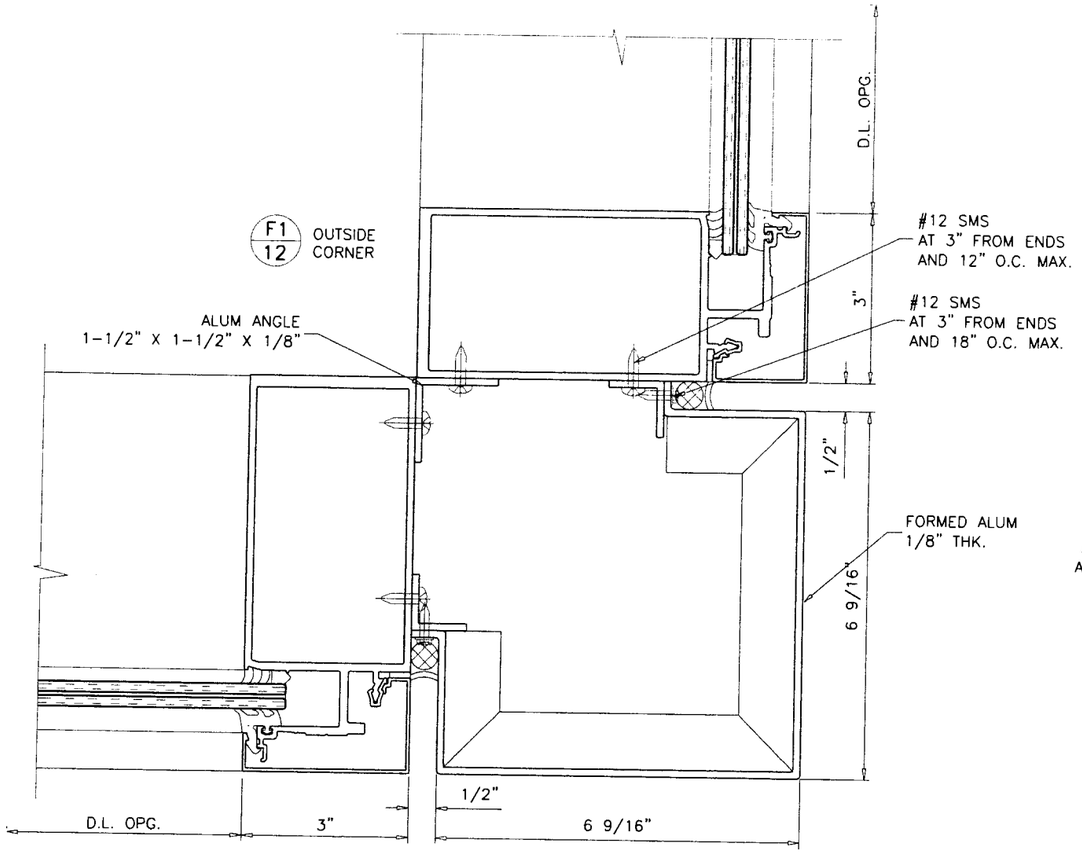

FOR MULLION CAPACITY
SINGLE SPAN SEE SHEETS 5 & 6
TWIN SPANS SEE SHEETS 7 & 8

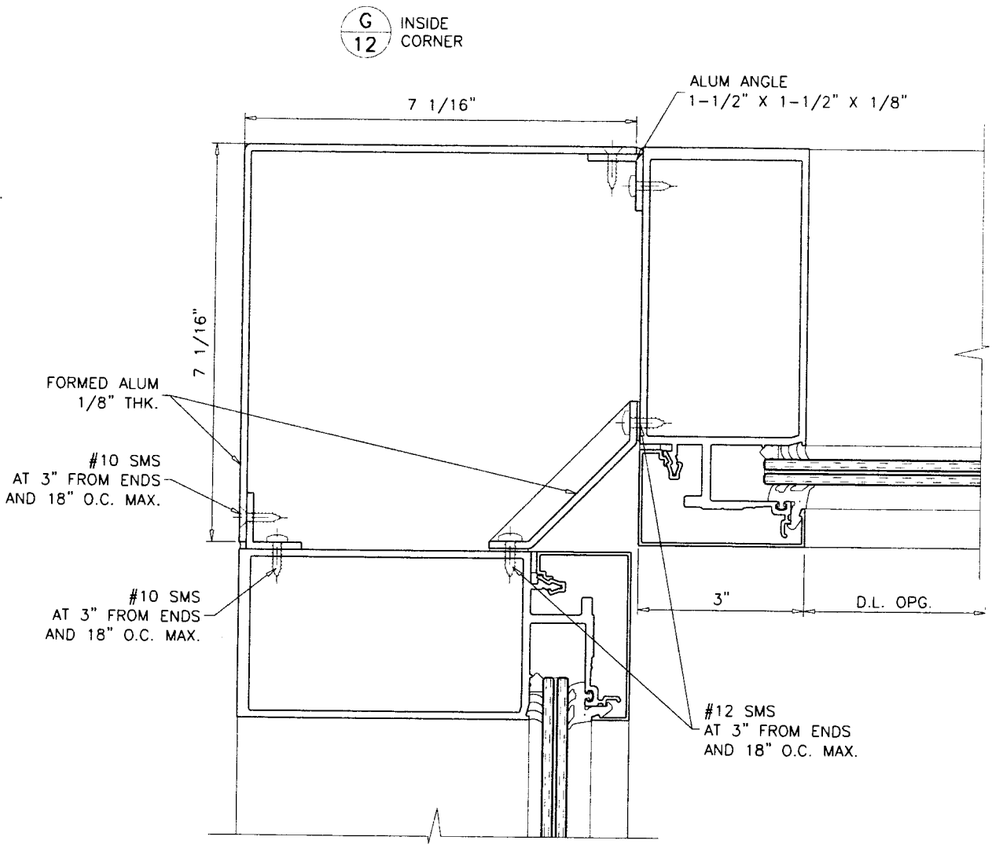

FOR MULLION CAPACITY
SINGLE SPAN SEE SHEETS 5 & 6
TWIN SPANS SEE SHEETS 7 & 8

PRODUCT REVISED
as complying with the Florida
Building Code
Acceptance No 09-0408.05
Expiration Date APRIL 11, 2013
By
Miami Dade Product Control
Division

Engr: DR. HUMAYOUN FAROOQ
STRUCTURES
FLA. PE # 16557
C.A.N. 3538

APR 06 2009

AL-FAROOQ CORPORATION
ENGINEERS & PRODUCT DEVELOPMENT
1235 S.W. 87 AVE
MIAMI, FLORIDA 33174
TEL. (305) 264-8100 FAX. (305) 262-6978
COMP-ANL\W06-87YKK

YHC-300 IG ALUMINUM CURTAIN WALL SYSTEM (L.M.I.)
YKK AP AMERICA INC.
332 FIRETOWER ROAD
DUBLIN, GEORGIA 31021
TEL.(478) 277-1955 FAX(478) 277-1978

revisions:			
no	date	by	description

date: 12-27-06
scale: 3/8" = 1"
dr. by: HAMID
chk. by:

drawing no.
W06-87

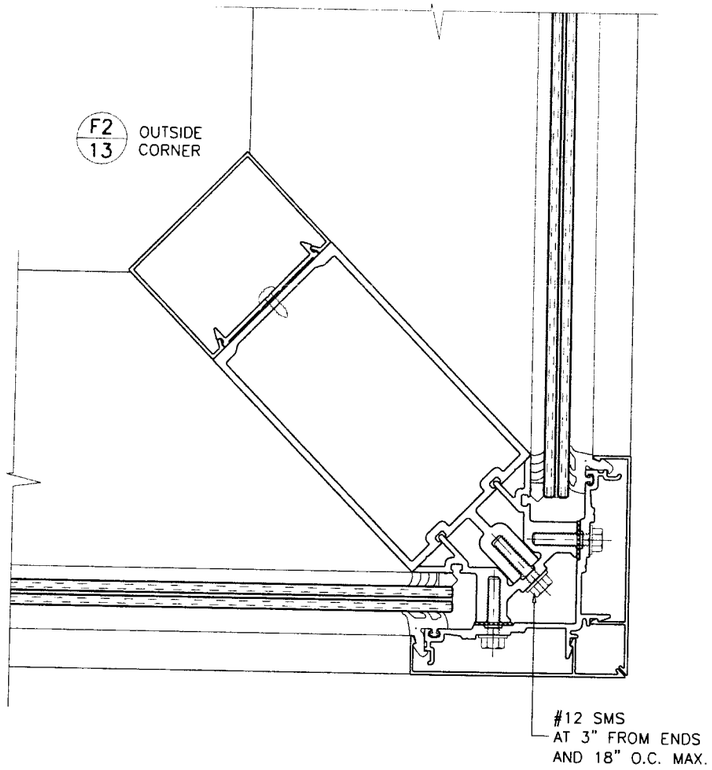

FOR MULLION CAPACITY
SINGLE SPAN SEE SHEET 8
TWIN SPANS SEE SHEET 9

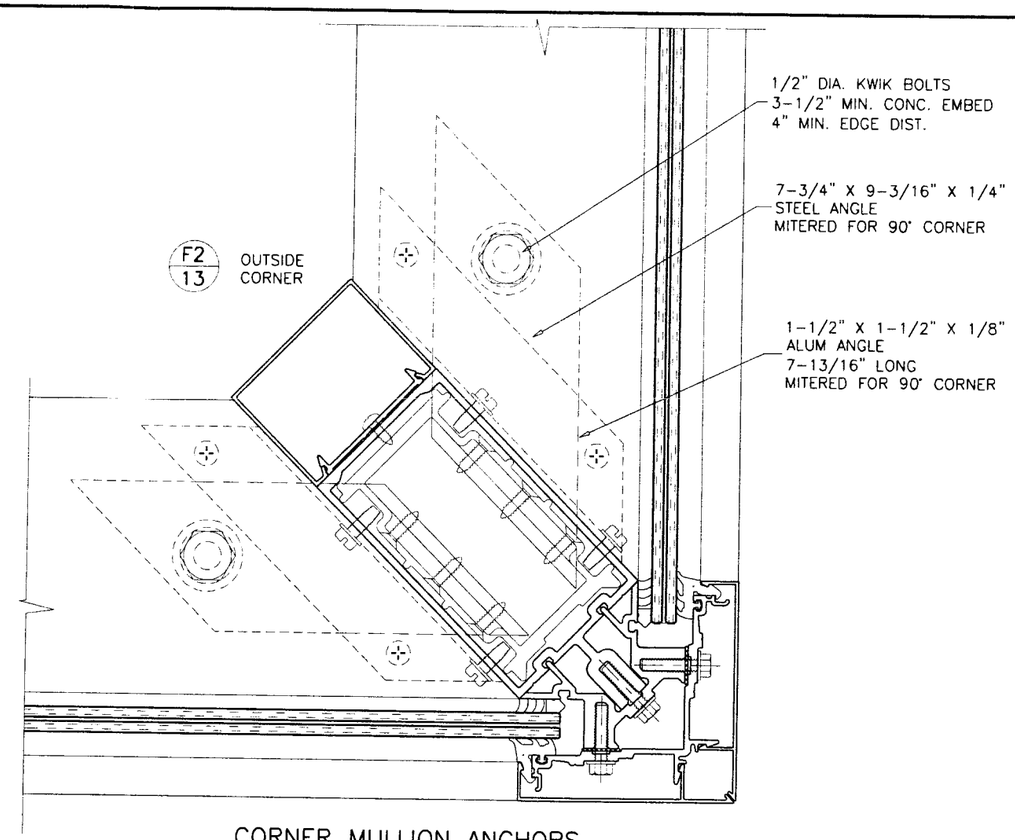

CORNER MULLION ANCHORS
HEAD/SILL
DETAIL '7'

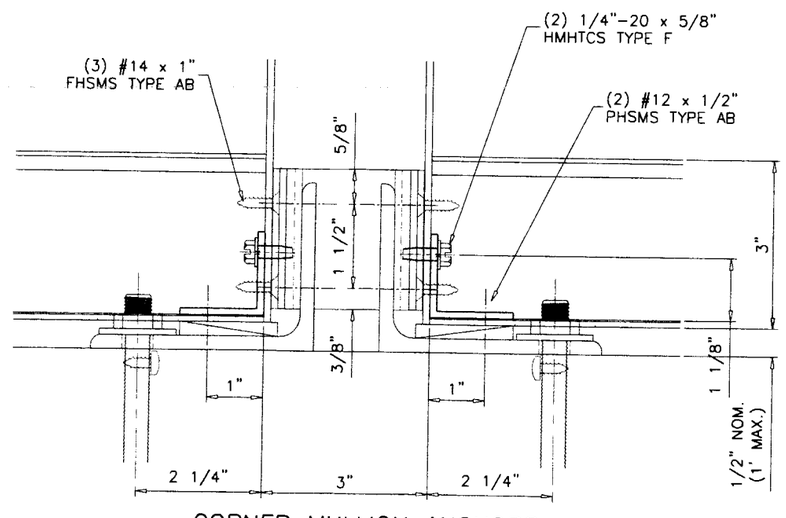

CORNER MULLION ANCHORS
FRONT VIEW

PRODUCT REVISED
as complying with the Florida
Building Code
Acceptance No 09-0408.05
Expiration Date APRIL 11, 2013
By
Miami Dade Product Control
Division

Engr: DR. HUMAYOUN FAROOQ
STRUCTURES
FLA. PE # 18557
C.A.N. 3538

APR 0 6 2009

AL-FAROOQ CORPORATION
ENGINEERS & PRODUCT DEVELOPMENT
1235 S.W. 87 AVE
MIAMI, FLORIDA 33174
TEL. (305) 264-8100 FAX. (305) 262-6978
COMP-ANL\W06-87YKK

YHC-300 IG ALUMINUM CURTAIN WALL SYSTEM (L.M.I.)

YKK AP AMERICA INC.
332 FIRETOWER ROAD
DUBLIN, GEORGIA 31021
TEL.(478) 277-1955 FAX(478) 277-1978

revisions:			
no	date	by	description

date: 12-27-06
scale: 3/8" = 1"
dr. by: HAMID
chk. by:

drawing no.
W06-87

WIND LOAD ANCHOR CAPACITY–PSF EXT.(+) & INT.(–)		
NOMINAL DIMS.		ANCHOR TYPE 'A'
WIDTH (W)	FRAME HEIGHT	
30"	108"	130.0
36"		130.0
42"		130.0
48"		126.7
54"		112.6
60"		101.3
66"		92.1
72"		84.4
30"	114"	130.0
36"		130.0
42"		130.0
48"		120.0
54"		106.7
60"		96.0
66"		87.3
72"		80.0
30"	120"	130.0
36"		130.0
42"		130.0
48"		114.0
54"		101.3
60"		91.2
66"		82.9
72"		76.0
30"	126"	130.0
36"		130.0
42"		124.1
48"		108.6
54"		96.5
60"		86.9
66"		79.0
30"	132"	130.0
36"		130.0
42"		118.4
48"		103.6
54"		92.1
60"		82.9
66"		75.4
30"	138"	130.0
36"		130.0
42"		113.3
48"		99.1
54"		88.1
60"		79.3
30"	144"	130.0
36"		126.7
42"		108.6
48"		95.0
54"		84.4
60"		76.0
30"	150"	130.0
36"		121.6
42"		104.2
48"		91.2
54"		81.1
60"		73.0

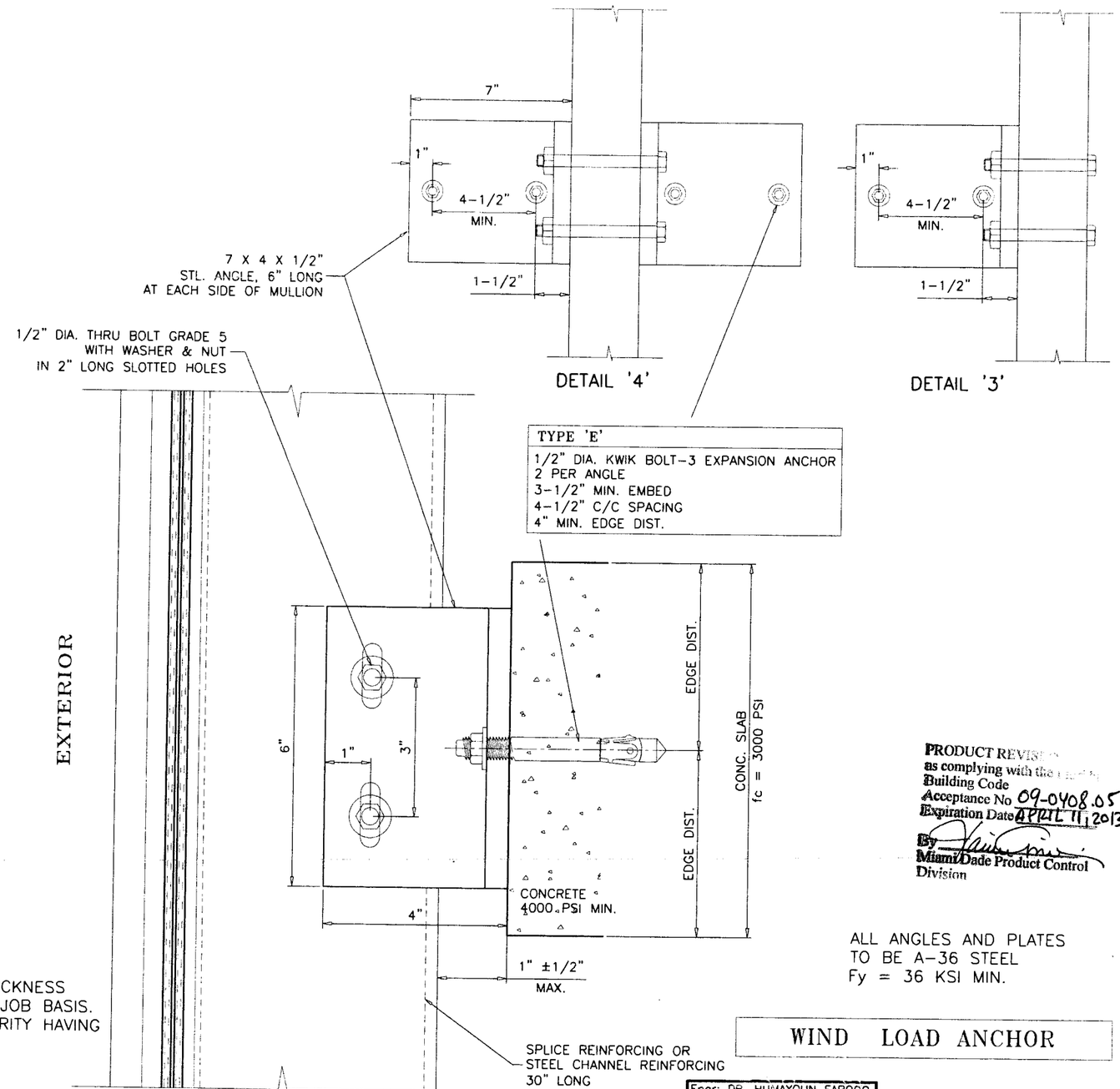

NOTE:
FOR SLABS LESS THAN 8 INCHES IN THICKNESS ANCHORS TO BE DESIGNED ON JOB TO JOB BASIS. THE DESIGN TO BE REVIEWED BY AUTHORITY HAVING JURISDICTION.

FOR MULLION ADJACENT TO 90° CORNER (SHEET 8 & 9) REDUCE ANCHOR CAPACITY BY 30%.

INTERMEDIATE ANCHORS
DETAIL '4' AT CENTER MULLION
DETAIL '3' AT JAMB MULLION

ANCHORS INTO CONCRETE

PRODUCT REVISION
as complying with the Florida
Building Code
Acceptance No 09-0408.05
Expiration Date APRIL 11, 2013
By
Miami-Dade Product Control
Division

ALL ANGLES AND PLATES
TO BE A–36 STEEL
Fy = 36 KSI MIN.

WIND LOAD ANCHOR

Engr: DR. HUMAYOUN FAROOQ
STRUCTURES
FLA. PE # 16557
C.A.N. 3538

APR 06 2009

AL-FAROOQ CORPORATION
ENGINEERS & PRODUCT DEVELOPMENT
1235 S.W. 87 AVE
MIAMI, FLORIDA 33174
TEL. (305) 264-8100 FAX. (305) 262-6978
COMP–ANL\W06–87YKK

YHC–300 IG ALUMINUM CURTAIN WALL SYSTEM (L.M.I.)

YKK AP AMERICA INC.
332 FIRETOWER ROAD
DUBLIN, GEORGIA 31021
TEL.(478) 277–1955 FAX(478) 277–1978

revisions:			
no	date	by	description

date: 12–27–06
scale: 3/8" = 1"
dr. by: HAMID
chk. by:

drawing no.
W06–87

MAX. WIDTH = 72 IN.
MAX. ANCHOR TO ANCHOR = 150 IN.
MAX. ANCHOR CAPACITY = 130 PSF

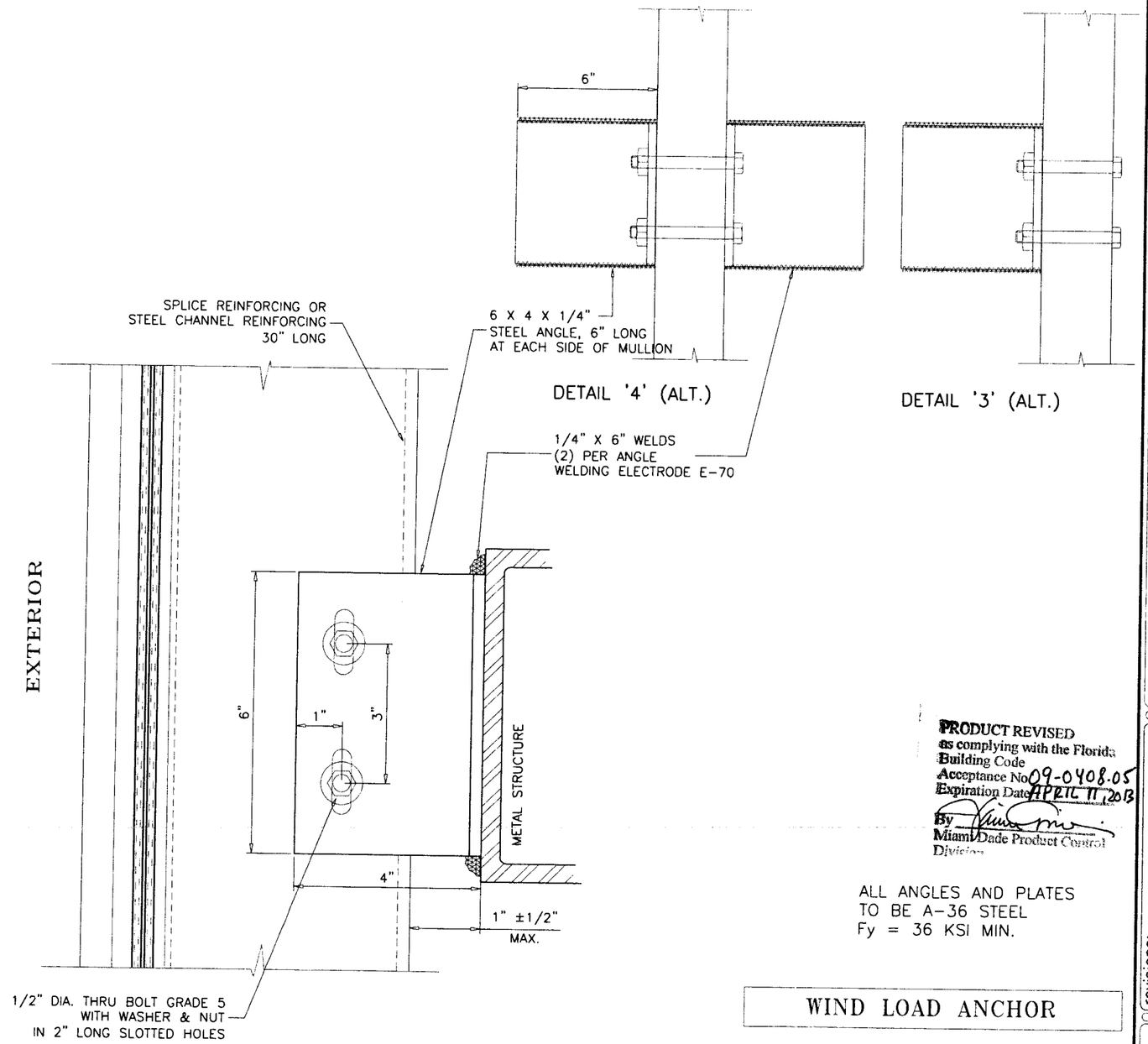

PRODUCT REVISED
as complying with the Florida
Building Code
Acceptance No 09-0408.05
Expiration Date APRIL 11, 2013
By
Miami-Dade Product Control
Division

ALL ANGLES AND PLATES
TO BE A-36 STEEL
Fy = 36 KSI MIN.

WIND LOAD ANCHOR

Engr: DR. HUMAYOUN FAROOQ
STRUCTURES
FLA. PE # 16557
C.A.N 3538

APR 06 2009

INTERMEDIATE ANCHORS
DETAIL '4' ALT. AT CENTER MULLION
DETAIL '3' ALT. AT JAMB MULLION

ANCHORS INTO METAL STRUCTURES
COMMERCIAL STEEL – 1/4" MIN. THICKNESS

AL-FAROOQ CORPORATION
ENGINEERS & PRODUCT DEVELOPMENT
1235 S.W. 87 AVE
MIAMI, FLORIDA 33174
TEL. (305) 264-8100 FAX. (305) 262-6978

COMP-ANL\W06-87YKK

YHC-300 IG ALUMINUM CURTAIN WALL SYSTEM (L.M.I.)

YKK AP AMERICA INC.
332 FIRETOWER ROAD
DUBLIN, GEORGIA 31021
TEL.(478) 277-1955 FAX(478) 277-1978

revisions:			
no	date	by	description

date: 12-27-06
scale: 3/8" = 1"
dr. by: HAMID
chk. by:

drawing no.
W06-87

WIND LOAD ANCHOR CAPACITY–PSF EXT.(+) & INT.(–)		
NOMINAL DIMS.		ANCHOR TYPE 'A'
WIDTH (W)	FRAME HEIGHT	
36"	108"	130.0
42"		130.0
48"		130.0
54"		125.0
60"		100.0
36"	114"	130.0
42"		130.0
48"		130.0
54"		115.0
60"		90.0
36"	120"	130.0
42"		130.0
48"		130.0
54"		105.0
60"		87.9
36"	126"	130.0
42"		130.0
48"		120.0
54"		95.0
60"		82.2
36"	132"	130.0
42"		130.0
48"		110.0
54"		88.9
60"		77.1
36"	138"	130.0
42"		130.0
48"		100.0
54"		83.7
60"		72.5
36"	144"	130.0
42"		120.0
48"		90.0
54"		79.0
60"		68.2
36"	150"	130.0
42"		110.0
48"		90.0
54"		72.2
60"		64.3

NOTE:
FOR SLABS LESS THAN 8 INCHES IN THICKNESS ANCHORS TO BE DESIGNED ON JOB TO JOB BASIS. THE DESIGN TO BE REVIEWED BY AUTHORITY HAVING JURISDICTION.

FOR MULLION ADJACENT TO 90° CORNER (SHEET 8 & 9) REDUCE ANCHOR CAPACITY BY 30%.

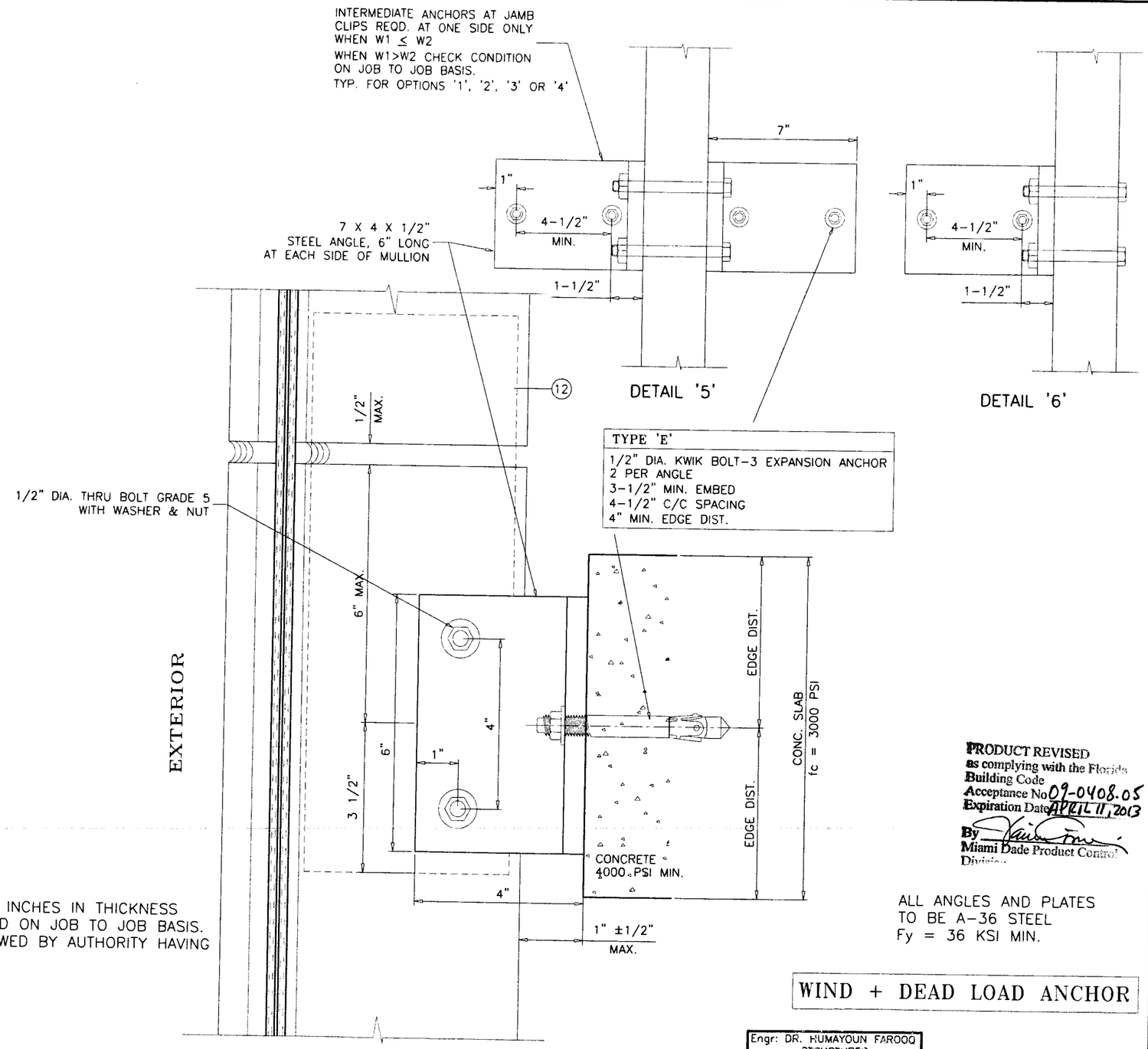

INTERMEDIATE ANCHORS
DETAIL '5' AT CENTER MULLION
DETAIL '6' AT JAMB MULLION

ANCHORS INTO CONCRETE

PRODUCT REVISED
as complying with the Florida Building Code
Acceptance No 09-0408.05
Expiration Date APRIL 11, 2013
By
Miami Dade Product Control Division

ALL ANGLES AND PLATES TO BE A-36 STEEL
Fy = 36 KSI MIN.

WIND + DEAD LOAD ANCHOR

Engr: DR. HUMAYOUN FAROOQ
STRUCTURES
FLA. PE # 16557
C.A.N. 3538

APR 06 2009

AL-FAROOQ CORPORATION
ENGINEERS & PRODUCT DEVELOPMENT
1235 S.W. 87 AVE
MIAMI, FLORIDA 33174
TEL. (305) 264-8100 FAX. (305) 262-6978
COMP-ANL\W06-87YKK

YHC-300 IG ALUMINUM CURTAIN WALL SYSTEM (L.M.I.)

YKK AP AMERICA INC.
332 FIRETOWER ROAD
DUBLIN, GEORGIA 31021
TEL.(478) 277-1955 FAX(478) 277-1978

revisions:		
no	date	by description

date: 12-27-06
scale: 3/8" = 1"
dr. by: HAMID
chk. by:

drawing no.
W06-87

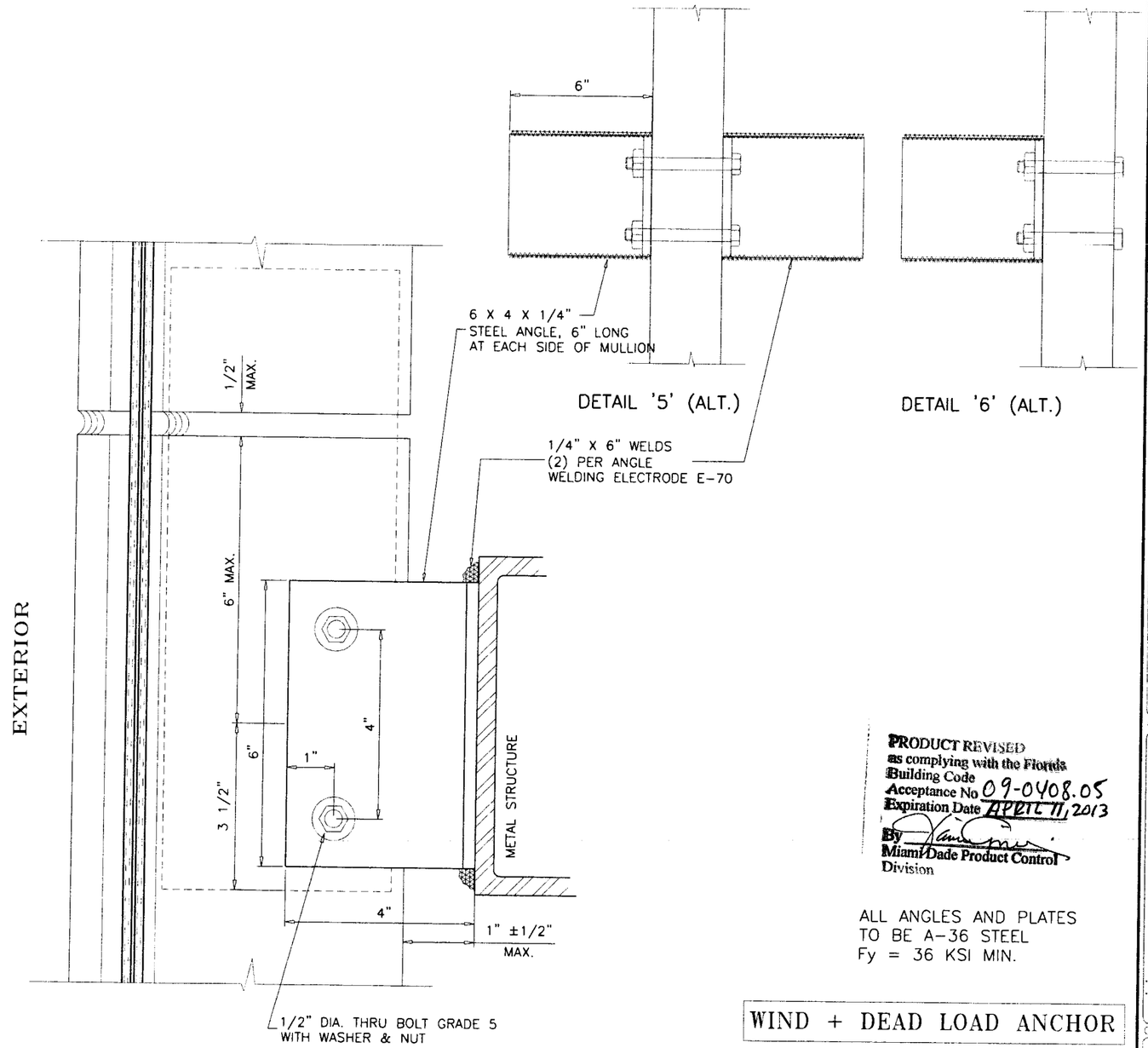

MAX. WIDTH = 72 IN.
MAX. ANCHOR TO ANCHOR = 150 IN.
MAX. ANCHOR CAPACITY = 130 PSF

PRODUCT REVISED
as complying with the Florida
Building Code
Acceptance No 09-0408.05
Expiration Date APRIL 11, 2013
By
Miami-Dade Product Control
Division

ALL ANGLES AND PLATES
TO BE A-36 STEEL
Fy = 36 KSI MIN.

WIND + DEAD LOAD ANCHOR

Engr: DR. HUMAYOUN FAROOQ
STRUCTURES
FLA. PE # 15557
C.A.N. 3538

APR 06 2009

INTERMEDIATE ANCHORS
DETAIL '5' (ALT.) AT CENTER MULLION
DETAIL '6' (ALT.) AT JAMB MULLION

ANCHORS INTO METAL STRUCTURES
COMMERCIAL STEEL – 1/4" MIN. THICKNESS

AL-FAROOQ CORPORATION
ENGINEERS & PRODUCT DEVELOPMENT
1235 S.W. 87 AVE
MIAMI, FLORIDA 33174
TEL. (305) 264-8100 FAX. (305) 262-6978

COMP-ANL\W06-87YKK

YHC-300 IG ALUMINUM CURTAIN WALL SYSTEM (L.M.I.)

YKK ap
YKK AP AMERICA INC.
332 FIRETOWER ROAD
DUBLIN, GEORGIA 31021
TEL.(478) 277-1955 FAX(478) 277-1978

revisions:			
no	date	by	description

date: 12-27-06
scale: 3/8" = 1"
dr. by: HAMID
chk. by:

drawing no.
W06-87

MAX. SPAN INCHES	MAX. DESIGN LOAD CAPACITY PSF
108	93
114	88.2
126	79.6
138	72.8
150	67

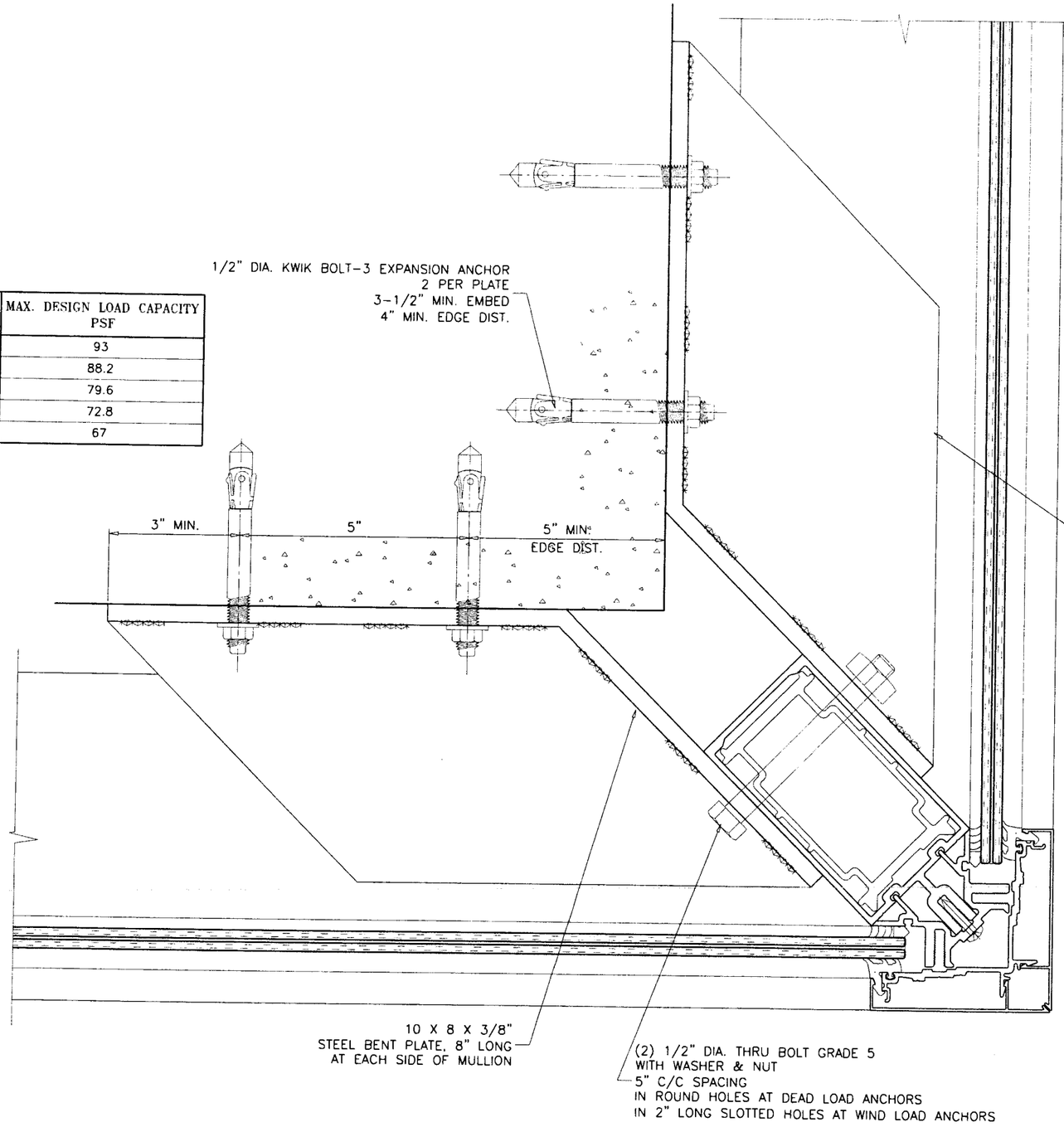

CORNER MULLION ANCHORS
DEATIL '8'

ANCHORS INTO CONCRETE

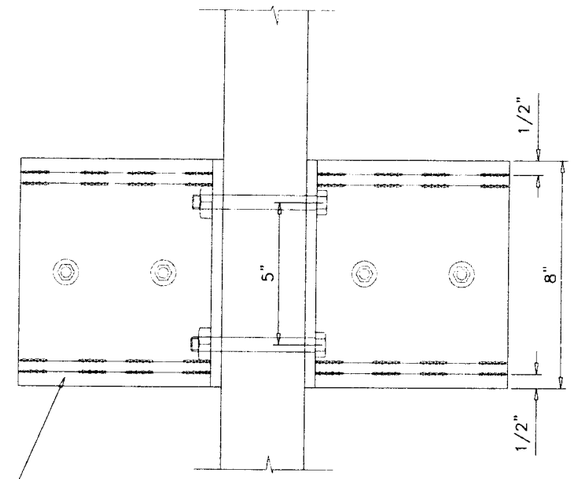

CORNER MULLION
FRONT VIEW

(2) 3/8" THK. GUSSET PLATES
ATTACHED TO BENT PLATE
W/ 1/4" X 1" WELDS AT 3" O.C. BOTH SIDES
WELDING ELECTRODE E-70

PRODUCT REVISED
as complying with the Florida
Building Code
Acceptance No 09-0408.05
Expiration Date APRIL 11, 2013
By
Miami Dade Product Control
Division

NOTE:
FOR SLABS LESS THAN 8 INCHES IN THICKNESS ANCHORS TO BE DESIGNED ON JOB TO JOB BASIS. THE DESIGN TO BE REVIEWED BY AUTHORITY HAVING JURISDICTION.

ALL ANGLES AND PLATES
TO BE A-36 STEEL
Fy = 36 KSI MIN.

WIND LOAD ANCHOR

WIND + DEAD LOAD ANCHOR

Engr: DR. HUMAYOUN FAROOQ
STRUCTURES
FLA. PE # 16557
C.A.N. 3538

APR 06 2009

AL-FAROOQ CORPORATION
ENGINEERS & PRODUCT DEVELOPMENT
1235 S.W. 87 AVE
MIAMI, FLORIDA 33174
TEL. (305) 264-8100 FAX. (305) 262-6978
COMP-ANL\W06-87YKK

YHC-300 IG ALUMINUM CURTAIN WALL SYSTEM (L.M.I.)

YKK AP AMERICA INC.
332 FIRETOWER ROAD
DUBLIN, GEORGIA 31021
TEL.(478) 277-1955 FAX(478) 277-1978

revisions:			
no	date	by	description

date: 12-27-06
scale: 3/8" = 1"
dr. by: HAMID
chk. by:

drawing no.
W06-87

MAX. WIDTH = 60 IN.
MAX. ANCHOR TO ANCHOR = 150 IN.
MAX. ANCHOR CAPACITY = 120 PSF

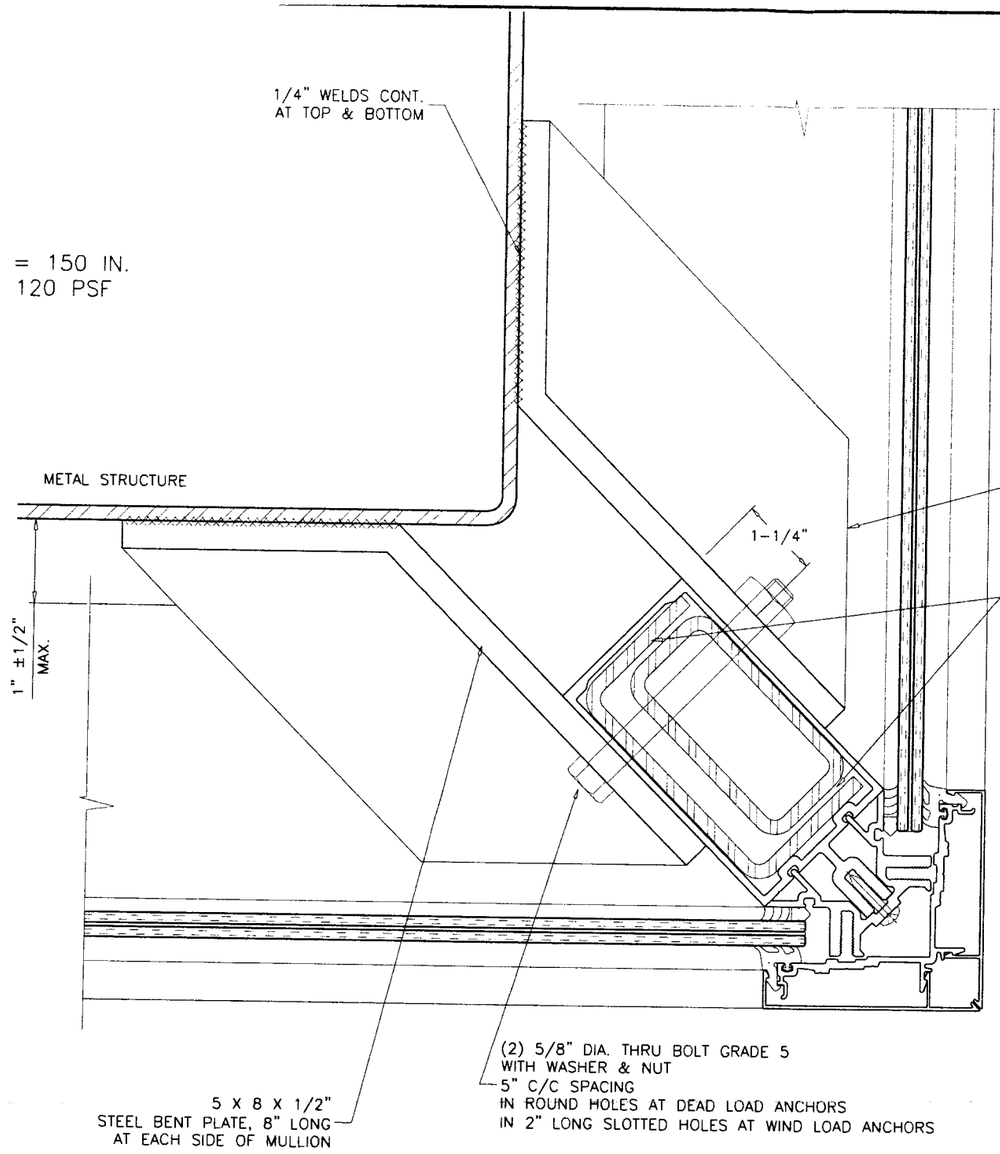

CORNER MULLION ANCHORS
DETAIL '8' (ALT.)

ANCHORS INTO METAL STRUCTURES
1/4" MIN. THICKNESS STEEL

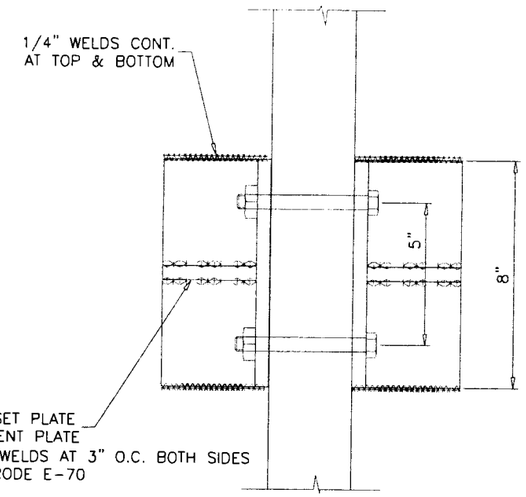

CORNER MULLION
FRONT VIEW

PRODUCT REVISED
as complying with the Florida
Building Code
Acceptance No 09-0408.05
Expiration Date APRIL 11, 2013
By
Miami Dade Product Control
Division

ALL ANGLES AND PLATES
TO BE A-36 STEEL
Fy = 36 KSI MIN.

WIND LOAD ANCHOR

WIND + DEAD LOAD ANCHOR

Engr: DR. HUMAYOUN FAROOQ
STRUCTURES
FLA. PE # 16557
C.A.N. 3538

APR 06 2009

AL-FAROOQ CORPORATION
ENGINEERS & PRODUCT DEVELOPMENT
1235 S.W. 87 AVE
MIAMI, FLORIDA 33174
TEL. (305) 264-8100 FAX. (305) 262-6978

COMP-ANL\W06-87YKK

YHC-300 IG ALUMINUM CURTAIN WALL SYSTEM (L.M.I.)

YKK ap
YKK AP AMERICA INC.
332 FIRETOWER ROAD
DUBLIN, GEORGIA 31021
TEL.(478) 277-1955 FAX(478) 277-1978

revisions:			
no	date	by	description

date: 12-27-06
scale: 3/8" = 1"
dr. by: HAMID
chk. by:

drawing no.
W06-87

WIND LOAD ANCHOR CAPACITY–PSF EXT.(+) & INT.(–)		
NOMINAL DIMS.		ANCHOR TYPE 'A'
WIDTH (W)	FRAME HEIGHT	
36"	108"	130.0
42"		130.0
48"		130.0
54"		125.0
60"		100.0
36"	114"	130.0
42"		130.0
48"		130.0
54"		115.0
60"		90.0
36"	120"	130.0
42"		130.0
48"		130.0
54"		105.0
60"		87.9
36"	126"	130.0
42"		130.0
48"		120.0
54"		95.0
60"		82.2
36"	132"	130.0
42"		130.0
48"		110.0
54"		88.9
60"		77.1
36"	138"	130.0
42"		130.0
48"		100.0
54"		83.7
60"		72.5
36"	144"	130.0
42"		120.0
48"		90.0
54"		79.0
60"		68.2
36"	150"	130.0
42"		110.0
48"		90.0
54"		72.2
60"		64.3

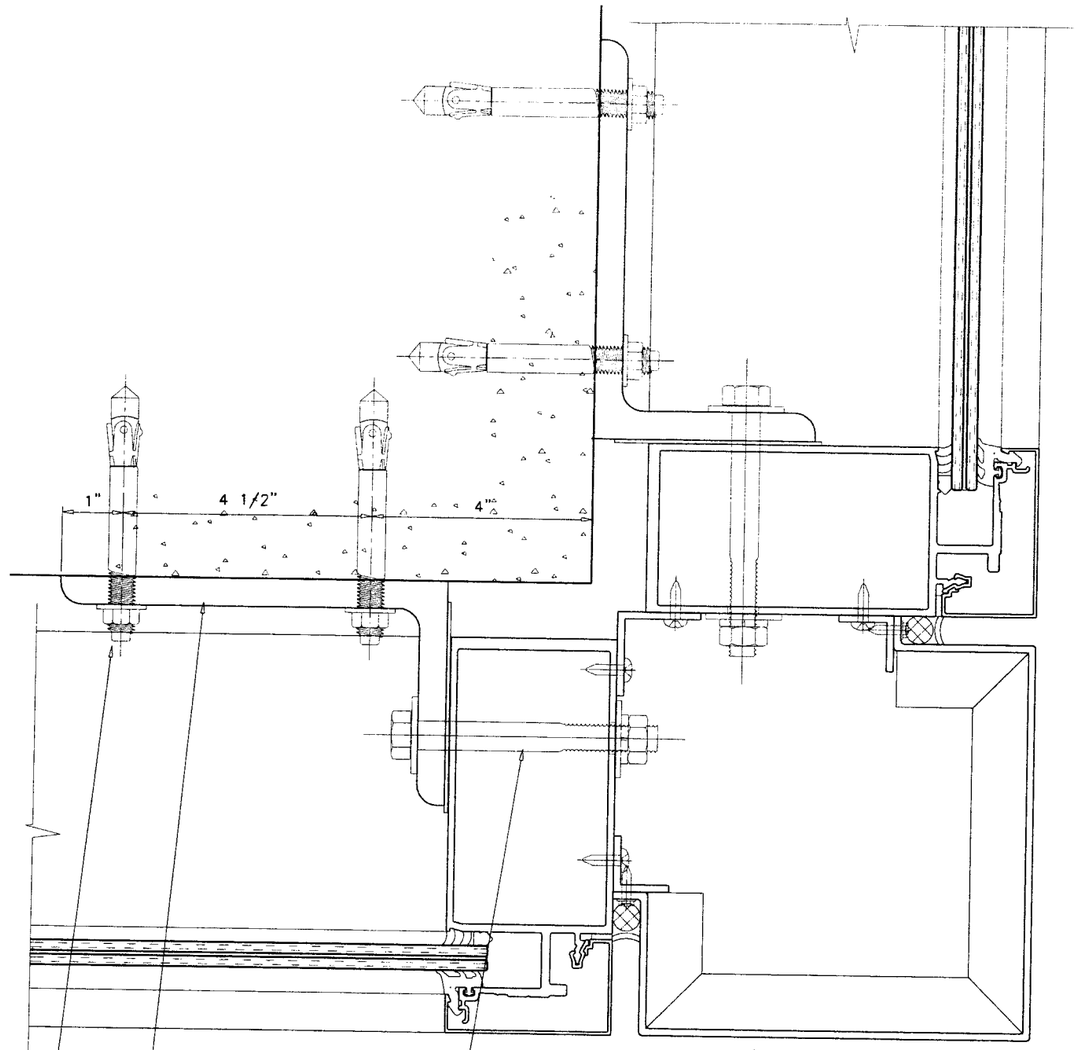

1/2" DIA. THRU BOLT GRADE 5
WITH WASHER & NUT
2 PER ANGLE AT 4" O.C.
IN 2" LONG SLOTTED HOLES AT WIND LOAD ANCHOR
1/2" DIA. HOLES AT WIND + DEAD LOAD ANCHOR

7 X 4 X 1/2"
STEEL ANGLE, 6" LONG

1/2" DIA. KWIK BOLT-3 EXPANSION ANCHOR
2 PER ANGLE
3-1/2" MIN. EMBED
4-1/2" C/C SPACING
4" MIN. EDGE DIST.

CORNER MULLION ANCHORS

DEATIL '9'

ANCHORS INTO CONCRETE

NOTE:
FOR SLABS LESS THAN 8 INCHES IN THICKNESS ANCHORS TO BE DESIGNED ON JOB TO JOB BASIS. THE DESIGN TO BE REVIEWED BY AUTHORITY HAVING JURISDICTION.

PRODUCT REVISED
as complying with the Florida Building Code
Acceptance No 09-0408.05
Expiration Date APRIL 11, 2013
By
Miami Dade Product Control Division

ALL ANGLES AND PLATES TO BE A-36 STEEL
Fy = 36 KSI MIN.

WIND LOAD ANCHOR

WIND + DEAD LOAD ANCHOR

Engr: DR. HUMAYOUN FAROOQ
STRUCTURES
FLA. PE # 16557
C.A.N. 3538

APR 06 2009

AL-FAROOQ CORPORATION
ENGINEERS & PRODUCT DEVELOPMENT
1235 S.W. 87 AVE
MIAMI, FLORIDA 33174
TEL. (305) 264-8100 FAX. (305) 262-6978

COMP-ANL\W06-87YKK

YHC-300 IG ALUMINUM CURTAIN WALL SYSTEM (L.M.I.)

YKK AP AMERICA INC.
332 FIRETOWER ROAD
DUBLIN, GEORGIA 31021
TEL.(478) 277-1955 FAX(478) 277-1978

revisions:			
no	date	by	description

date: 12-27-06
scale: 3/8" = 1"
dr. by: HAMID
chk. by:

drawing no.
W06-87

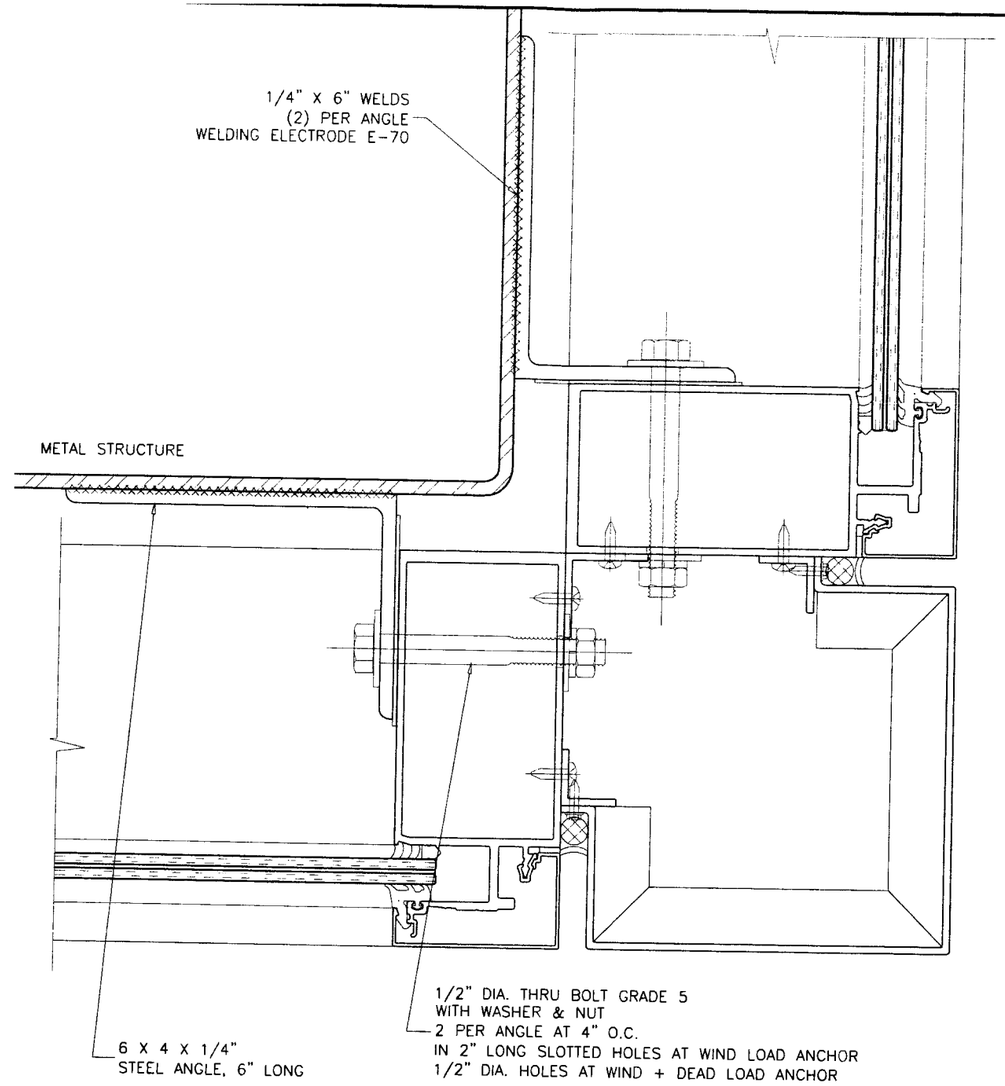

MAX. DESIGN LOAD = 130 PSF

PRODUCT REVISED
as complying with the Florida
Building Code
Acceptance No. 09-0408.05
Expiration Date APRIL 17, 2013
By
Miami Dade Product Control
Division

CORNER MULLION ANCHORS
DETAIL '9' (ALT.)

ANCHORS INTO METAL STRUCTURES
1/4" MIN. THICKNESS STEEL

ALL ANGLES AND PLATES
TO BE A-36 STEEL
Fy = 36 KSI MIN.

WIND LOAD ANCHOR

WIND + DEAD LOAD ANCHOR

Engr: DR. HUMAYOUN FAROOQ
STRUCTURES
FLA. PE # 16557
C.A.N. 3538

APR 06 2009

AL-FAROOQ CORPORATION
ENGINEERS & PRODUCT DEVELOPMENT
1235 S.W. 87 AVE
MIAMI, FLORIDA 33174
TEL. (305) 264-8100 FAX. (305) 262-6978

COMP-ANL\W06-87YKK

YHC-300 IG ALUMINUM CURTAIN WALL SYSTEM (L.M.I.)

YKK ap
YKK AP AMERICA INC.
332 FIRETOWER ROAD
DUBLIN, GEORGIA 31021
TEL.(478) 277-1955 FAX(478) 277-1978

revisions:			
no	date	by	description

date: 12-27-06
scale: 3/8" = 1"
dr. by: HAMID
chk. by:

drawing no.
W06-87

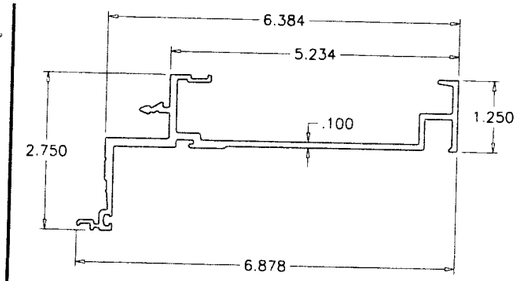

1 FRAME HEAD

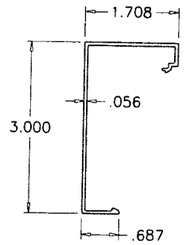

7 EXTERIOR SNAP COVER

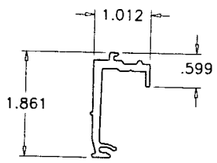

6 GLASS STOP

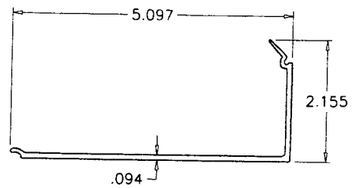

8 INTERIOR SNAP COVER

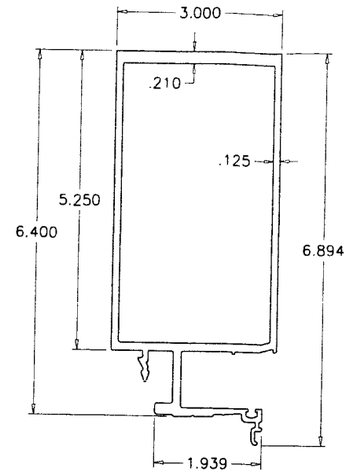

4 FRAME JAMB

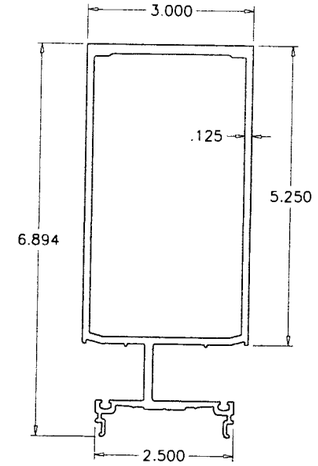

5 FRAME MULLION

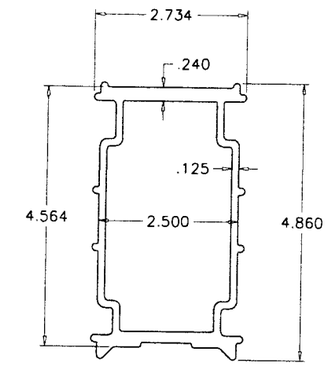

12 13 14 SPLICE SLEEVE

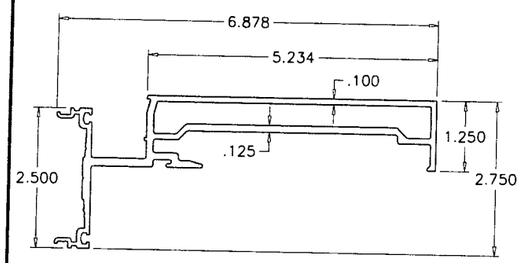

2 FRAME HORIZONTAL

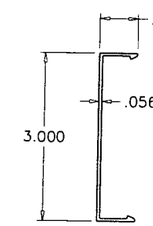

9 SNAP COVER

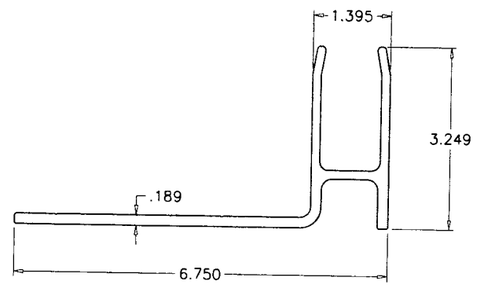

15 'F' ANCHOR CLIP

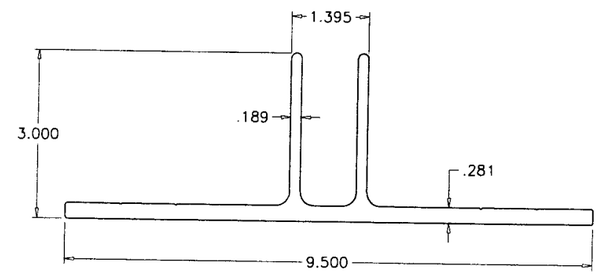

16 'T' ANCHOR CLIP

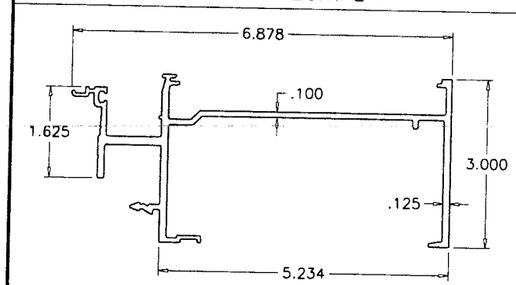

3 FRAME SILL

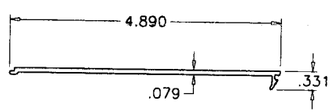

10 FLUSH FILLER

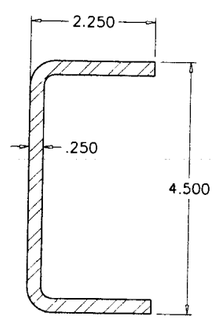

18 REINFORCING CHANNEL

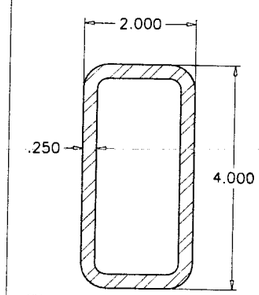

17 REINFORCING TUBE
Fy = 46 KSI

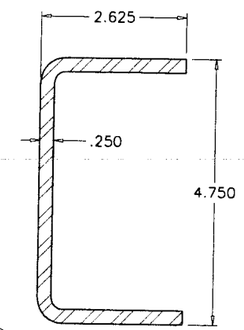

19 CHANNEL
Fy= 50 KSI

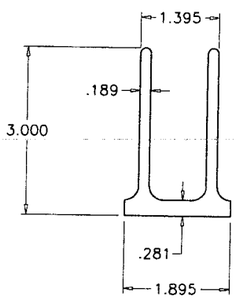

– MODIFIED 'T' ANCHOR CLIP

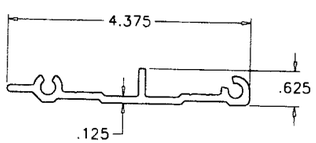

11 SHEAR CLIP

PRODUCT REVISED
as complying with the Florida
Building Code
Acceptance No 09-0408.05
Expiration Date APRIL 11, 2013
By
Miami Dade Product Control
Division

Engr: DR. HUMAYOUN FAROOQ
STRUCTURES
FLA. PE # 16557
C.A.N. 3538

APR 06 2009

AL-FAROOQ CORPORATION
ENGINEERS & PRODUCT DEVELOPMENT
1235 S.W. 87 AVE
MIAMI, FLORIDA 33174
TEL. (305) 264-8100 FAX. (305) 262-6978
COMP-ANL\W06-87YKK

YKK AP AMERICA INC.
332 FIRETOWER ROAD
DUBLIN, GEORGIA 31021
TEL.(478) 277-1955 FAX(478) 277-1978

YHC-300 IG ALUMINUM CURTAIN WALL SYSTEM (L.M.I.)

revisions:

no	date	by	description

date: 12-27-06
scale: 3/8" = 1"
dr. by: HAMID
chk. by:

drawing no.
W06-87

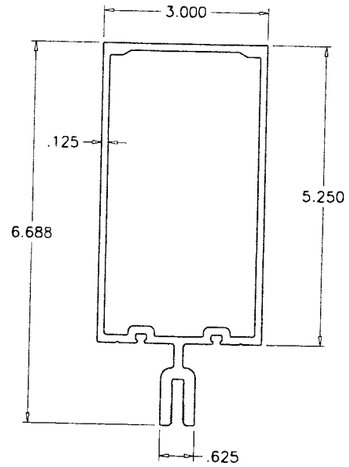

(34) CORNER MULLION

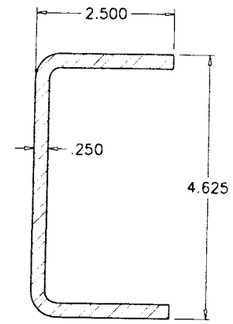

(19A) REINFORCING CHANNEL AT CORNER MULLION
Fy= 50 KSI

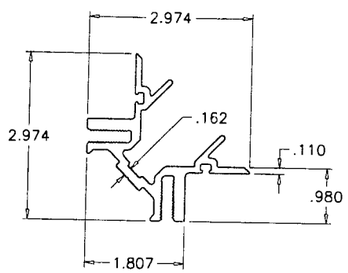

(35) GLAZING ADAPTER

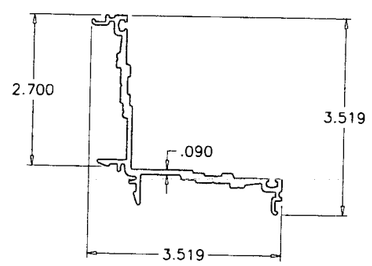

(36) GLASS STOP

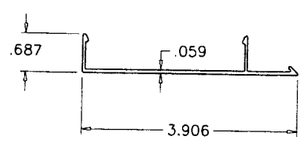

(37) SNAP COVER

ITEM NO.	PART NO.	QUANTITY	DESCRIPTION	MATERIAL	MANF./SUPPLIER/REMARKS
1	E9-3115	AS REQD.	FRAME HEAD	6063-T5	YKK AP AMERICA
2	E9-3114	AS REQD.	FRAME HORIZONTAL	6063-T5	YKK AP AMERICA
3	E9-3116	AS REQD.	FRAME SILL	6063-T5	YKK AP AMERICA
4	E9-3118	AS REQD.	FRAME JAMB	6063-T5	YKK AP AMERICA
5	E9-3108	AS REQD.	FRAME MULLION	6063-T5	YKK AP AMERICA
6	E9-3137	AS REQD.	GLASS STOP	6063-T5	YKK AP AMERICA
7	E9-3170	AS REQD.	EXTERIOR SNAP COVER	6063-T5	YKK AP AMERICA
8	E9-3168	AS REQD.	INTERIOR SNAP COVER	6063-T5	YKK AP AMERICA
9	E9-3161	AS REQD.	SNAP COVER	6063-T5	YKK AP AMERICA
10	E9-3162	AS REQD.	FLUSH FILLER	6063-T5	YKK AP AMERICA
11	E1-3019	AS REQD.	SHEAR CLIP	6063-T5	YKK AP AMERICA
12	E1-3005	AS REQD.	SPLICE SLEEVE, 6" LONG	6063-T5	YKK AP AMERICA
13	E1-3006	AS REQD.	ANCHOR SLEEVE, 3" LONG	6063-T5	YKK AP AMERICA
14	E1-3007	AS REQD.	REINFORCING SLEEVE, 29" LONG	6063-T5	YKK AP AMERICA
15	E1-3004	AS REQD.	'F' ANCHOR	6063-T5	YKK AP AMERICA
16	E1-3003	AS REQD.	'T' ANCHOR	6063-T5	YKK AP AMERICA
17	E1-0187	AS REQD.	REINFORCING TUBE	STEEL	–
18	E1-0186	AS REQD.	REINFORCING CHANNEL	STEEL	–
19	E1-0175	AS REQD.	CHANNEL, 36" LONG	STEEL	FOR TWIN SPAN @ MID ANCHOR
19A	–	AS REQD.	CHANNEL AT CORNER MULLION	STEEL	FOR TWIN SPAN @ MID ANCHOR
20	E2-0351	AS REQD.	3/16" F.C. GLAZING GASKET	EPDM	–
21	E2-0352	AS REQD.	5/16" F.C. GLAZING GASKET	EPDM	–
22	E2-0359	AS REQD.	SPACER GASKET	EPDM SC	–
23	E2-0364	AS REQD.	SETTING BLOCK	EPDM	–
24	E3-0103	AS REQD.	SLIP PAD	NYLON	–
25	E3-0037	AS REQD.	PVC ISOLATOR	RIGID PVC	–
26	E2-0369	AS REQD.	END DAM BLOCK	E.V.A. SPONGE	–
27	E2-0368	AS REQD.	END DAM BLOCK	E.V.A. SPONGE	–
28	FF-0808	AS REQD.	#8 X 1/2" FH SMS	ZINC PLATED ST.	FOR REINF. SLEEVE
29	FC-1212	AS REQD.	#12 X 3/4" FH SMS	ZINC PLATED ST.	FOR SPLICE SLEEVE
30	FC-1220	AS REQD.	#12 X 1-1/4" FH SMS	ZINC PLATED ST.	FOR HORIZONTAL/SHEAR CLIP
31	PC-1010	AS REQD.	#10 X 5/8" PH SMS	ZINC PLATED ST.	FOR ANCHOR SLEEVE
32	PC-1208	AS REQD.	#12 X 1/2" PH SMS	ZINC PLATED ST.	FOR SHEAR BLOCK
33	HF2528-W1	AS REQD.	1/4-20 X 1-3/4" HWH TCS	ZINC PLATED ST.	FOR TYP. SHEAR CLIP & ST. REINFORCING
34	E9-3101	AS REQD.	CORNER MULLION	6063-T5	YKK AP AMERICA
35	–	AS REQD.	GLAZING ADAPTER	–	YKK AP AMERICA
36	–	AS REQD.	GLASS STOP	–	YKK AP AMERICA
37	–	AS REQD.	SNAP COVER	–	YKK AP AMERICA
38	–	–	–	–	–

PRODUCT REVISED
as complying with the Florida
Building Code
Acceptance No 09-0408.05
Expiration Date APRIL 11, 2013
By
Miami-Dade Product Control
Division

Engr: DR. HUMAYOUN FAROOQ
STRUCTURES
FLA. PE # 16557
C.A.N. 3538

APR 06 2009

AL-FAROOQ CORPORATION
ENGINEERS & PRODUCT DEVELOPMENT
1235 S.W. 87 AVE
MIAMI, FLORIDA 33174
TEL. (305) 264-8100 FAX. (305) 262-6978
COMP-ANL\W06-87YKK

YKK AP AMERICA INC.
332 FIRETOWER ROAD
DUBLIN, GEORGIA 31021
TEL.(478) 277-1955 FAX(478) 277-1978

YHC-300 IG ALUMINUM CURTAIN WALL SYSTEM (L.M.I.)

revisions:

no	date	by	description

date: 12-27-06
scale: 3/8" = 1"
dr. by: HAMID
chk. by:

drawing no.
W06-87

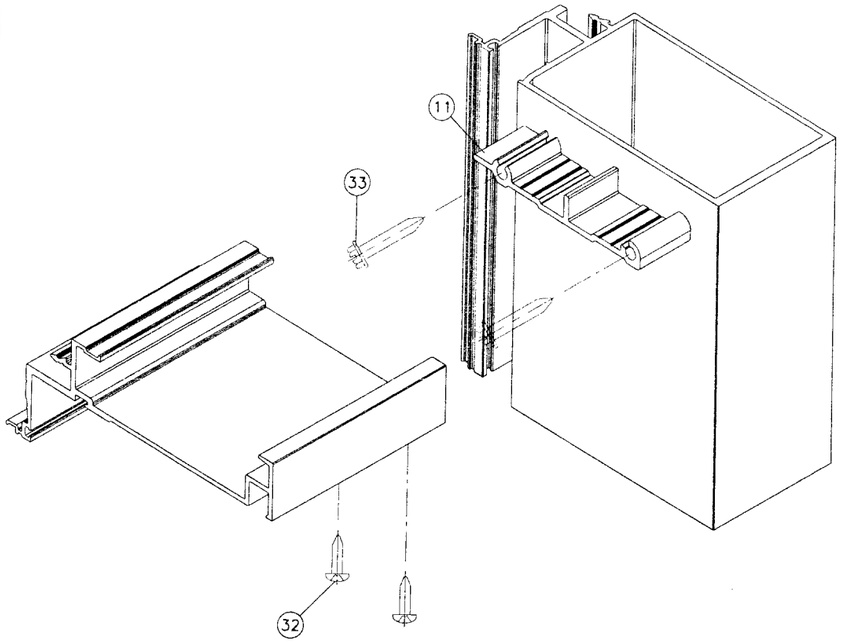

FRAME TOP CORNER

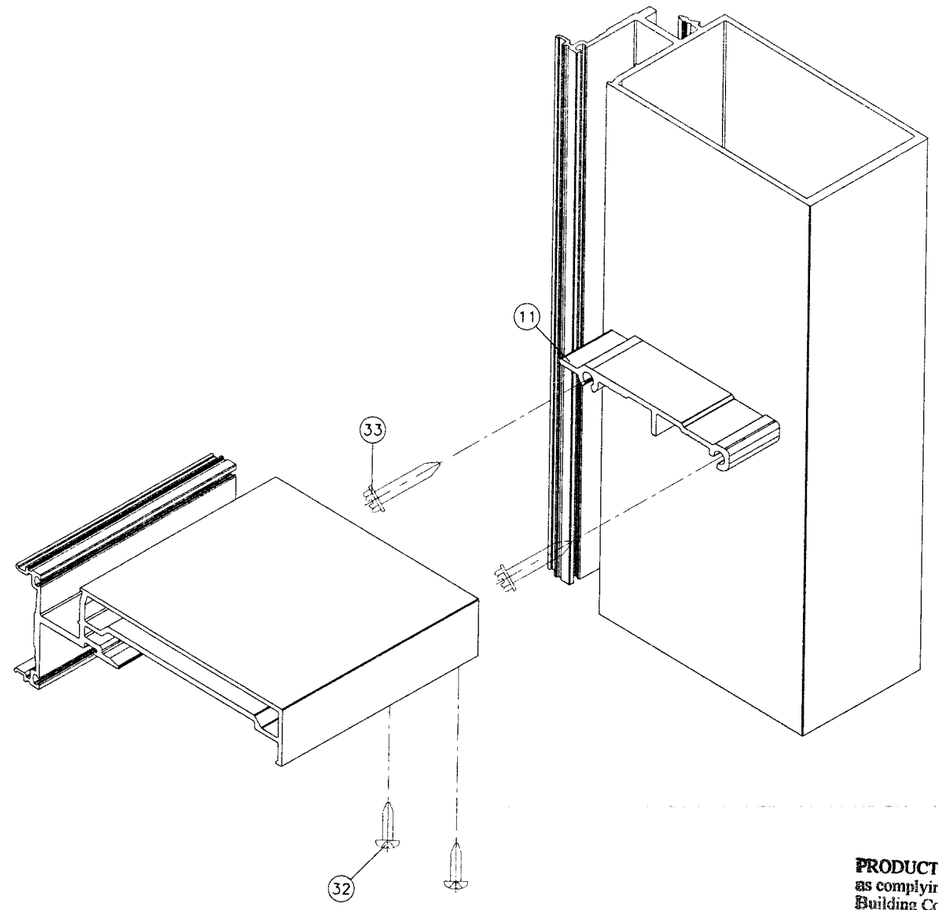

FRAME HORIZONTAL CORNER

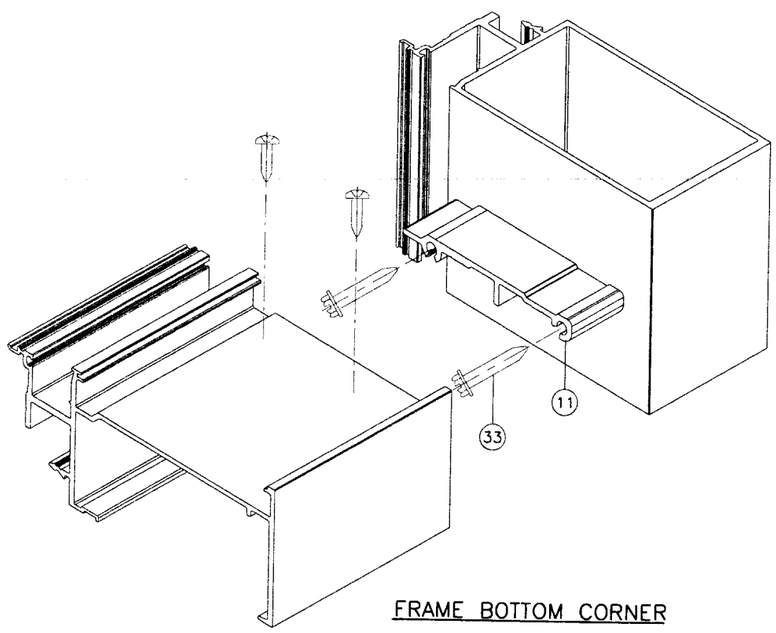

FRAME BOTTOM CORNER

PRODUCT REVISED
as complying with the Florid
Building Code
Acceptance No 09-0408.05
Expiration Date APRIL 11, 2013
By
Miami Dade Product Control
Division

Engr: DR. HUMAYOUN FAROOQ
STRUCTURES
FLA. PE # 16557
C.A.N. 3538

APR 06 2009

AL-FAROOQ CORPORATION
ENGINEERS & PRODUCT DEVELOPMENT
1235 S.W. 87 AVE
MIAMI, FLORIDA 33174
TEL. (305) 264-8100 FAX. (305) 262-6978
COMP-ANL\W06-87YKK

YHC-300 IG ALUMINUM CURTAIN WALL SYSTEM (L.M.I.)

YKK AP AMERICA INC.
332 FIRETOWER ROAD
DUBLIN, GEORGIA 31021
TEL.(478) 277-1955 FAX(478) 277-1978

revisions:			
no	date	by	description

date: 12-27-06
scale: 3/8" = 1"
dr. by: HAMID
chk. by:

drawing no.
W06-87