MIAMI-DADE COUNTY
BUILDING CODE COMPLIANCE OFFICE (BCCO)
PRODUCT CONTROL DIVISION

MIAMI-DADE COUNTY, FLORIDA
METRO-DADE FLAGLER BUILDING
140 WEST FLAGLER STREET, SUITE 1107
MIAMI, FLORIDA 33130-1563
(305) 375-2902 FAX (305) 372-6339
www.miamidade.GOV/buildingcode

NOTICE OF ACCEPTANCE (NOA)

Jeld-Wen, Inc (OR)
3737 Lakeport Boulevard
Klamath Falls, OR 97601

SCOPE:

This NOA is being issued under the applicable rules and regulations governing the use of construction materials. The documentation submitted has been reviewed by Miami-Dade County Product Control Division and accepted by the Board of Rules and Appeals (BORA) to be used in Miami-Dade County and other areas where allowed by the Authority Having Jurisdiction (AHJ).

This NOA shall not be valid after the expiration date stated below. The Miami-Dade County Product Control Division (In Miami-Dade County) and/or the AHJ (in areas other than Miami-Dade County) reserve the right to have this product or material tested for quality assurance purposes. If this product or material fails to perform in the accepted manner, the manufacturer will incur the expense of such testing and the AHJ may immediately revoke, modify, or suspend the use of such product or material within their jurisdiction. BORA reserves the right to revoke this acceptance, if it is determined by Miami-Dade County Product Control Division that this product or material fails to meet the requirements of the applicable building code.

This product is approved as described herein, and has been designed to comply with the Florida Building Code, including the High Velocity Hurricane Zone.

DESCRIPTION:

Series "Gladiator/ Finishield" 6'8" W/E Inswing Glazed Steel Door System w/ sidelites – N.I.

APPROVAL DOCUMENT: Drawing No. **JW192008**, titled "Series Gladiator/ Finishield Glazed Wood Edge 12-0 x 6-8 Inswing Steel Door" sheets 1 through 14 of 14, dated 06/25/08 with revision "**C**" dated 02/17/10, prepared by CertWorks, LLC, signed, sealed and dated 10/14/10 by Kristina S. Daugherty, P. E., bearing the Miami-Dade County Product Control Approval stamp with the Notice of Acceptance number and Approval date by the Miami-Dade County Product Control Division.

MISSILE IMPACT RATING: None.

LIMITATIONS:

1.) Miami-Dade County Product Control Approved Shutters Or Protection Devices Shall Be Required.
2.) Maximum design pressure rating shall be + 19 PSF where water infiltration requirement is needed.

LABELING: Each unit shall bear a permanent label with the manufacturer's name or logo, city, state and following statement: "Miami-Dade County Product Control Approved", unless otherwise noted herein.

RENEWAL of this NOA shall be considered after a renewal application has been filed and there has been no change in the applicable building code negatively affecting the performance of this product.

TERMINATION of this NOA will occur after the expiration date or if there has been a revision or change in the materials, use, and/or manufacture of the product or process. Misuse of this NOA as an endorsement of any product, for sales, advertising or any other purposes shall automatically terminate this NOA. Failure to comply with any section of this NOA shall be cause for termination and removal of NOA.

ADVERTISEMENT: The NOA number preceded by the words Miami-Dade County, Florida, and followed by the expiration date may be displayed in advertising literature. If any portion of the NOA is displayed, then it shall be done in its entirety.

INSPECTION: A copy of this entire NOA shall be provided to the user by the manufacturer or its distributors and shall be available for inspection at the job site at the request of the Building Official.

This NOA consists of this page 1, evidence pages E-1, E-2 and E-3, as well as approval document mentioned above.

The submitted documentation was reviewed by **Jaime D. Gascon, P. E.**

MIAMI-DADE COUNTY APPROVED

J. Gascon
10/21/10

NOTICE OF ACCEPTANCE: EVIDENCE SUBMITTED

A. DRAWINGS

1. Manufacturer's die drawings and sections.
2. Drawing No **JW192008**, titled "Series Gladiator/ Finishield Glazed Wood Edge 12–0 x 6–8 Inswing Steel Door" sheets 1 through 14 of 14, dated 06/25/08 with revision "**C**" dated 02/17/10, prepared by CertWorks, LLC, signed, sealed and dated 10/14/10 by Kristina S. Daugherty, P. E.

B. TESTS

1. Test reports on: 1) Air Infiltration Test, per FBC, TAS 202–94
   2) Uniform Static Air Pressure Test, Loading per FBC TAS 202–94
   3) Water Resistance Test, per FBC, TAS 202–94
   4) Forced Entry Test, per FBC 2411 3.2.1, TAS 202–94

   along with marked–up drawings and installation diagram of French door with sidelites, prepared by National Certified Testing Laboratories, Inc., Test Report No. **NCTL 210–3558–1**, dated 10/07/08, signed and sealed by Gerald J. Ferrara, P. E.
2. Test reports on: 1) "Standard Test Method for Tensile Properties of Plastics" per ASTM D 638–08, tensile yield of 31.3 Ksi and tensile modulus of elasticity of 38.4 Ksi,

   along with marked–up drawings and installation diagram of French door with sidelites, prepared by ETC Laboratories, Inc., Test Report No. **ETC–08–056–21686.0**, dated 10/20/08, signed and sealed by Joseph Labora Doldan, P.E.
3. Test reports on: 1) ASTM E84–08 Standard Test Method for Surface Burning Characteristics of Building Materials

   along with marked–up drawings and installation diagram of dylite expandable polystyrene, prepared by Intertek Testing Services, N. A., Inc., Test Report No. **ITS 3113726SAT–001 Rev. 1**, dated 03/13/09, signed and sealed by Frederick D. Curkeet, P. E.
4. Test reports on: 1) "Standard Test Method for Tensile Properties of Plastics" per ASTM D 638–03, tensile yield of 132.0 Ksi and tensile modulus of elasticity of 15.3 Ksi;
   2) "Standard Test Methods for Density and Specific Gravity (Relative Density) of Plastics by Displacement" per ASTM D792–00, G=0.4286,

   along with marked–up drawings and installation diagram of Endura Products extruded PVC, prepared by IMR Test Lab., Inc., accredited by Nadcap and A2LA, Test Report No. **IMR–200707982**, dated 09/10/07, signed by Sophia Ezell and Stan Deforest, validated by O. M. Engineering Services, Inc., signed sealed and dated 09/19/08 by Nimesh Bhavsar, P. E.

Jaime D. Gascon, P. E.
Chief, Product Control Division
NOA No. 09–0415.07
Expiration Date: November 11, 2015
Approval Date: November 11, 2010

NOTICE OF ACCEPTANCE: EVIDENCE SUBMITTED

B. TESTS (CONTINUED)

C. Test reports on: 1) "Standard Test Methods for Density and Specific Gravity (Relative Density) of Plastics by Displacement" per ASTM D792–08, G=1.11, along with marked–up drawings and installation diagram of Endura Products extruded PVC, prepared by IMR Test Lab., Inc., accredited by Nadcap and A2LA, Test Report No. **IMR–200908522**, dated 10/27/09, signed by Jamie Wech and Michael Bimbo.

C. CALCULATIONS

1. Anchor verification calculations and structural analysis, complying with FBC–2007, dated 04/06/09, prepared by CertWorks, LLC, signed, sealed and dated 10/14/10 by Kristina S. Daugherty, P. E.
   Complies with ASTM E1300–98/ 04

D. QUALITY ASSURANCE

1. Miami–Dade Building Code Compliance Office (BCCO).

E. MATERIAL CERTIFICATIONS

1. Notice of Acceptance No. **07–0214.08** issued to ODL, Inc. for their "**ODL/ Western reflection's Non–Impact HP Polypropylene Lite–Kit Assembly**" dated 03/22/07, expiring on 12/30/10.
2. Notice of Acceptance No. **07–0801.05** issued to ODL, Inc. for their "**HP Polypropylene series High Performance Door lite material – Component Approval**" dated 09/27/07, expiring on 01/17/11.

F. STATEMENTS

1. Statement letter of conformance, no financial interest and compliance with the FBC 2007, prepared by CertWorks, LLC, signed, sealed and dated 04/06/09 by Kristina S. Daugherty.
2. Statement letter of IMR Test Lab., Inc. validation, prepared by O. M. Engineering Services, Inc., signed, sealed and dated 09/19/08 by Nimesh Bhavsar, P. E.
3. Laboratory compliance letter for Test Report No. **NCTL 210–3558–1**, issued by National Certified Testing Laboratories, Inc., dated October 07, 2008, signed and sealed by Gerald J. Ferrara, P. E.
4. Laboratory addendum letter number 01 for Test Report No. **NCTL 210–3558–1**, issued by National Certified Testing Laboratories, Inc., dated August 25, 2009, signed and sealed by Gerald J. Ferrara, P. E.
5. Laboratory addendum letter number 02 for Test Report No. **NCTL 210–3558–1**, issued by National Certified Testing Laboratories, Inc., dated June 15, 2010, signed and sealed by Gerald J. Ferrara, P. E.

Jaime D. Gascon, P. E.
Chief, Product Control Division
NOA No. 09–0415.07
Expiration Date: November 11, 2015
Approval Date: November 11, 2010

NOTICE OF ACCEPTANCE: EVIDENCE SUBMITTED

F. STATEMENTS (CONTINUED)

6. Laboratory compliance letter for Test Report No. **ETC–08–056–21686.0**, issued by ETC Laboratories, Inc., dated October 20, 2008, signed and sealed by Joseph Labora Doldan, P. E.
7. Laboratory compliance letter for Test Report No. **ITS 3113726SAT–001 Rev. 1**, issued by Intertek Testing Services, N. A., Inc., dated March 13, 2009, signed and sealed by Frederick D. Curkeet, P. E.
8. Laboratory compliance letter for Test Report No. **IMR–200707982**, issued by IMR Test Lab., Inc., dated September 10, 2007, signed by Sophia Ezell and Stan Deforest.
9. Laboratory compliance letter for Test Report No. **IMR–200908522**, issued by IMR Test Lab., Inc., dated October 27, 2009, signed by Jamie Wech and Michael Bimbo.
10. Distributor Agreement between Millwork Masters, Florida and Jeld–Wen (OR), Oregon, dated 02/02/9, signed by Steve Saffell, respectively.

G. OTHERS

1. None.

Jaime D. Gascon, P. E.
Chief, Product Control Division
NOA No. 09–0415.07
Expiration Date: November 11, 2015
Approval Date: November 11, 2010

JELD-WEN®

GLADIATOR/FINISHIELD GLAZED WOOD EDGE
12-0x6-8 INSWING STEEL DOOR SYSTEM

MATERIAL PROTECTION

1. ALL LATCH/LOCK AND HINGE HARDWARE TO BE OF CORROSION RESISTANT MATERIAL OR CORROSION RESISTANT COATED.
2. ANCHORING COMPONENTS MUST MEET THE CORROSION RESISTANT STANDARDS AS IDENTIFIED IN THE FBC.
3. ALL WOOD FRAMING IS TREATED IN ACCORDANCE WITH WOOD PROTECTION STANDARDS AS IDENTIFIED IN THE FBC.

GENERAL NOTES

1. THE PRODUCT SHOWN HEREIN IS DESIGNED TO COMPLY WITH THE CURRENT FLORIDA BUILDING CODE (FBC) BASED ON THE SIGNED AND SEALED DATE; INCLUDING HVHZ AND HAS BEEN EVALUATED IN ACCORDANCE WITH TAS 202-94 AND ASTM E331-00 AND ASTM E330-02.
2. 2X AND 1X WOOD BUCKS BY OTHERS, MUST BE ANCHORED PROPERLY TO TRANSFER LOADS TO THE STRUCTURE.
3. PRODUCT ANCHORS SHALL BE AS LISTED AND SPACED AS SHOWN ON DETAILS. ANCHOR EMBEDMENT TO BASE MATERIAL SHALL BE BEYOND WALL DRESSING OR STUCCO.
4. DESIGNED PRESSURE RATING SEE TABLE I, PAGE 1.
5. FLORIDA APPROVED IMPACT RESISTANCE SHUTTERS ARE REQUIRED FOR DOORS AND SIDELITES.
6. SCALE BASED ON 11x17 SHEET SIZE.
7. ALL 1X & 2X TO BE 0.55 SPECIFIC GRAVITY OR GREATER.

DOOR LEAF CONSTRUCTION:

FACE SHEETS: THE FACE SHEETS ARE GLUED TO THE CORE AND SUBSTRATE WITH LMC ADHESIVE.
CORE DESIGN: THE CORE CONSISTS OF 1-1.25 POUND DENSITY EXPANED POLYSTYRENE (EPS).
PANEL CONSTRUCTION: EACH DOOR PANEL IS CONSTRUCTED FROM TWO SHEETS OF 25-GAUGE (.018" MINIMUM) GALVANIZED STEEL. THE FACE SHEETS ARE BENT 90° OVER THE 1.688" X 1.0" LVL (LAMINATED VENEER LUMBER) STILES AND TOP RAIL. THE AVERAGE MIN. YIELD STRENGTH OF 25 GA SHEET STEEL SKIN IS 38,400 psi. THE 1.688"X1.203" BOTTOM RAIL CONSISTS OF ROLLED-FORMED GALVANIZED 25-GAUGE (.018" MINIMUM) STEEL. THE WOOD LOCK BLOCK IS 1.688" X 3 1/8" X 12".

FRAME CONSTRUCTION: THE JAMBS & HEAD ARE CONSTRUCTED OF WOOD. THE SILL IS COMPRISED OF AN ADJUSTABLE COMPOSITE MATERIAL WITH ALUMINUM CLADDING. TOP CORNERS ARE COPED, BUTTED, & SEALED USING SILICONE AND FASTENED USING FOUR 16 GA. 7/16" X 2" STAPLES PER CORNER. BOTTOM CORNERS ARE COPED, BUTTED, & SEALED USING SILICONE AND FASTENED USING THREE 16 GA. 7/16" X 2" STAPLES PER CORNER. THE VERTICAL MULLIONS ARE FASTENED THROUGH THE HEAD & SILL USING THREE #8X2-1/2" SCREWS PER END. A 5/8 HOLE IS DRILLED AT THE CENTER OF SILL AND A PLASTIC COVER IS INSERTED TO RECEIVE THE BOTTOM ASTRAGAL BOLT. A 3/8" HOLE IS DRILLED AT THE CENTER OF THE FRAME HEAD AND A METAL STRIKE PLATE IS FASTENED USING TWO #6 X 1 1/2" SCREWS TO RECEIVE THE TOP ASTRAGAL BOLT. EACH FIXED PANEL IS SECURED INTO THE FRAME USING FOUR 16 GA. 7/16" X 2" LONG STAPLES PER STILE FASTENED THROUGH THE JAMBS. ALL MULLION JOINERY AND THE FIXED PANELS / FRAME JOINERY ARE SEALED AT THE EXTERIOR USING 1199 SILICONE.

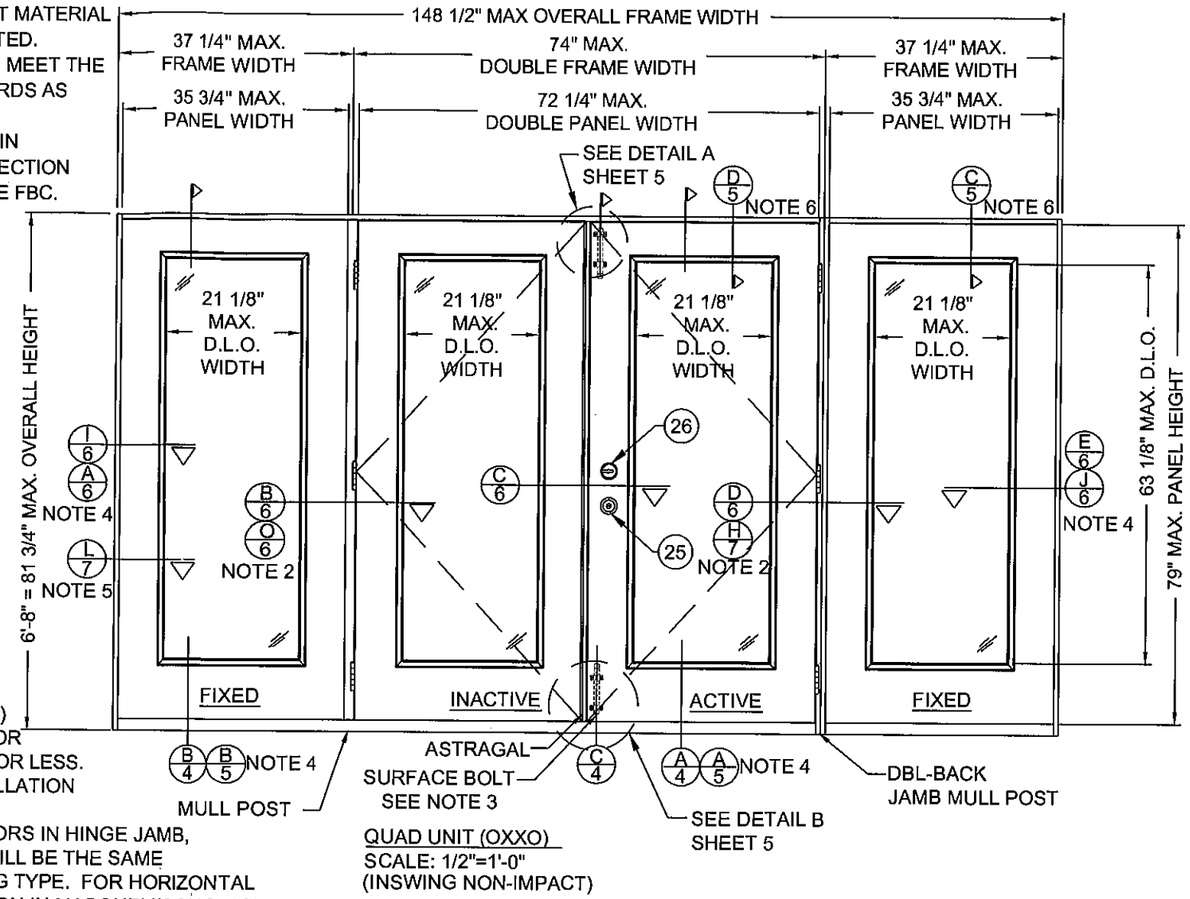

QUAD UNIT (OXXO)
SCALE: 1/2"=1'-0"
(INSWING NON-IMPACT)

NOTES:
1 - ALL VIEWS FROM INTERIOR.
2 - MULL POSTS & DOUBLE BACK JAMBS ARE INTERCHANGEABLE. (SEE OPTIONAL CROSS SECTIONS)
3 - SURFACE BOLT NOT REQUIRED FOR APPLICATIONS REQUIRING DP-45 OR LESS.
4 - MASONRY AND CONCRETE INSTALLATION DETAILS.
5 - POSITION AND NUMBER OF ANCHORS IN HINGE JAMB, LATCH JAMB OR SIDELITE JAMB WILL BE THE SAME REGARDLESS OF ROUGH OPENING TYPE. FOR HORIZONTAL CROSS SECTION IN 1X BUCK OPTION IN MASONRY/CONCRETE, SEE SHEET 8 FOR DETAILS.
6 - FOR VERTICAL ANCHOR IN 1X BUCK OPTION IN MASONRY/CONCRETE, SEE SHEET 6 FOR DETAILS.

TABLE 1

DESIGN PRESSURE RATING (PSF)					
	*WHERE WATER INFILTRATION REQUIREMENT IS NEEDED			WHERE WATER INFILTRATION REQUIREMENT IS NOT NEEDED	
	WITHOUT SURFACE BOLTS	WITH SURFACE BOLTS		WITHOUT SURFACE BOLTS	WITH SURFACE BOLTS
POSITIVE	*+45	*+55	POSITIVE	+45	+55
NEGATIVE	-45	-55	NEGATIVE	-45	-55

*NOTE: UNIT SHALL BE INSTALLED AT LOCATION PROTECTED BY OVERHANG SUCH THAT OVERHANG(OH) RATIO = OH LENGTH/OH HEIGHT IS EQUAL TO, OR GREATER THAN, 1.0. WHERE REQUIRED OVERHANG CANNOT BE ACHIEVED, DESIGN PRESSURE LIMITED TO +19 PSF PER TEST REPORT.

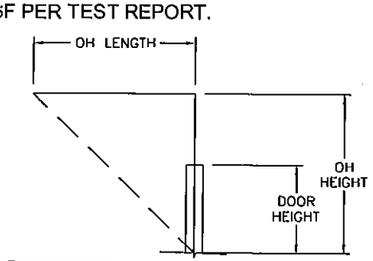

TABLE OF CONTENTS

SHT #	DESCRIPTION
1	TYP. ELEVATIONS & GENERAL NOTES
2	TYPICAL ELEVATIONS
3	TYPICAL ELEVATIONS
4	VERTICAL CROSS SECTIONS & B.O.M.
5	VERTICAL CROSS SECTIONS
6	HORIZONTAL CROSS SECTIONS
7	HORIZ. CROSS SECTIONS & DETAILS
8	ANCHORING LOCATIONS & DETAILS
9	ANCHORING LOCATIONS & DETAILS
10	ANCHORING LOCATIONS & DETAILS
11	ANCHORING LOCATIONS
12	UNIT COMPONENTS
13	VENT LITE DETAIL
14	VENT LITE MATERIAL LIST

Approved as complying with the Florida Building Code
Date 11/11/2010
NOA# 09-0415.07
Miami Dade Product Control Division
By

10-14-10
Kristina S. Daugherty
CertWorks LLC.
Florida P.E. No. 68455
127 W. Fairbanks Ave, Ste 438
Winter Park, FL 32789
FBPE Cert. of Authorization #28520

JELD-WEN, INC.
3737 LAKEPORT BLVD.
KLAMATH FALLS, OR, 97601
PH. 541-882-3451

PRODUCT: GLADIATOR/FINISHIELD GLAZED WOOD EDGE 12-0x6-8 INSWING STEEL DOOR
PART OR ASSEMBLY: TYPICAL ELEVATIONS

NO.	DATE	REVISIONS	BY
C	2/17/2010	P.E. CHANGES	GL
B	2/9/09	P.E. CHANGES	WBD
A	1/21/09	P.E. CHANGES	WBD

DATE: 6/25/08
SCALE: AS NOTED
DWG. BY: WBD
CHK. BY: S. FREY
DRAWING NO.: JW192008
SHEET 1 OF 14

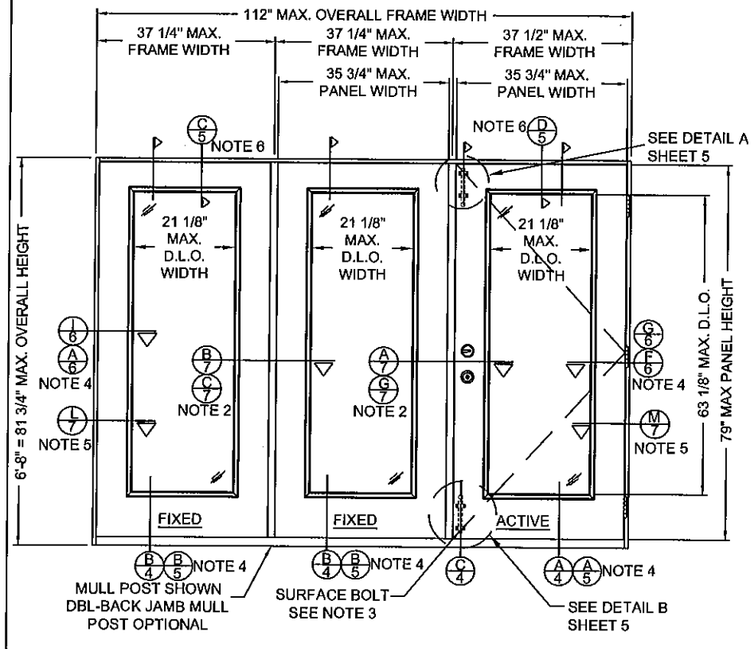

TRI UNIT (OOX) OR (XOO)

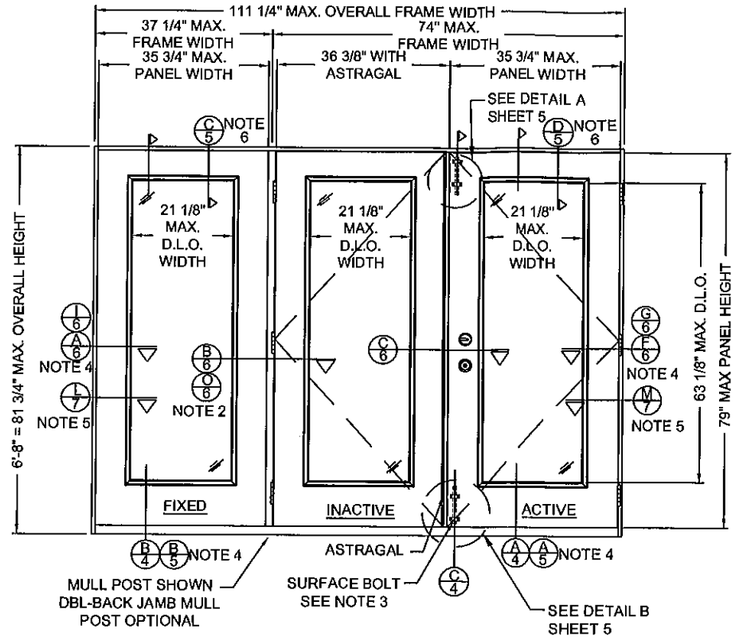

TRI UNIT (OXX) OR (XXO)

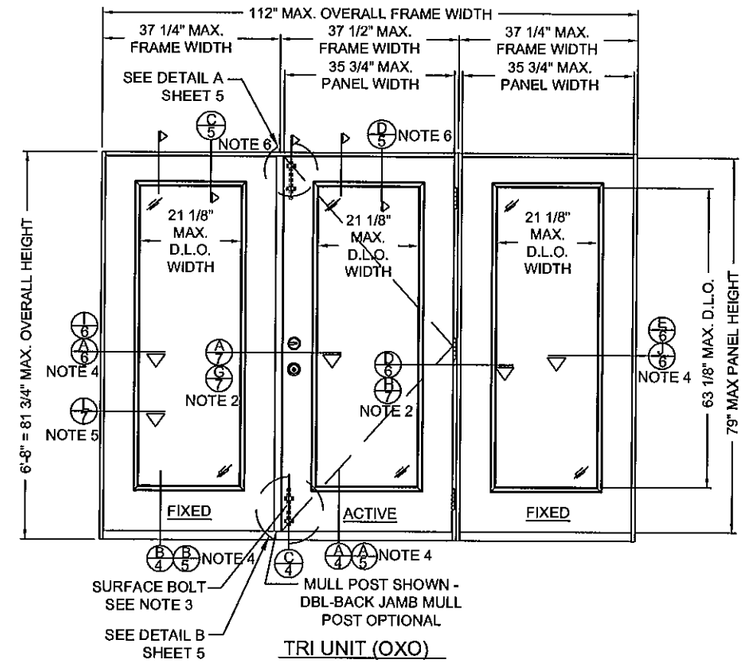

TRI UNIT (OXO)

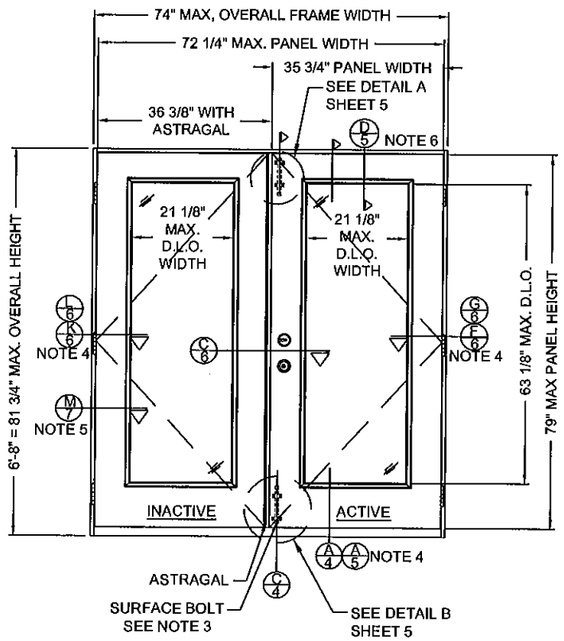

DUAL UNIT (XX)

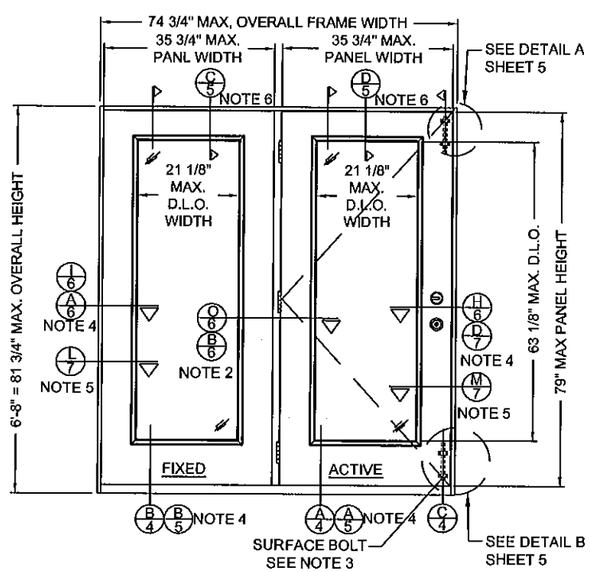

DUAL UNIT (OX) OR (XO)

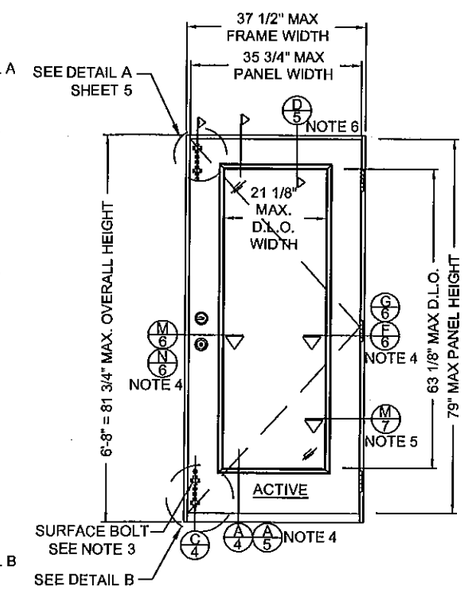

SINGLE UNIT (X)

NOTES:

1 - ALL VIEWS FROM INTERIOR.
2 - MULL POSTS & DOUBLE BACK JAMBS ARE INTERCHANGEABLE. (SEE OPTIONAL CROSS SECTIONS)
3 - SURFACE BOLT NOT REQUIRED FOR APPLICATIONS REQUIRING DP-55 OR LESS.
4 - MASONRY AND CONCRETE INSTALLATION DETAILS.
5 - POSITION AND NUMBER OF ANCHORS IN HINGE JAMB, LATCH JAMB, OR SIDELITE JAMB WILL BE THE SAME REGARDLESS OF ROUGH OPENING TYPE. FOR HORIZONTAL CROSS SECTION IN 1X BUCK OPTION IN MASONRY/CONCRETE, SEE SHEET 7 FOR DETAILS.
6 - FOR VERTICAL ANCHOR IN 1X BUCK OPTION IN MASONRY/CONCRETE, SEE SHEET 5 FOR DETAILS.

Approved as complying with the Florida Building Code
Date 11/11/2010
NOA# 09-0405.07
Miami Dade Product Control Division
By

10-14-10
Kristina S. Daugherty
CertWorks LLC.
Florida P.E. No. 68455
127 W. Fairbanks Ave, Ste 438
Winter Park, FL 32789
FBPE Cert. of Authorization #28520

JELD-WEN, INC.
3737 LAKEPORT BLVD.
KLAMATH FALLS, OR, 97601
PH. 541-882-3451

PRODUCT: GLADIATOR/FINISHIELD GLAZED WOOD EDGE 12-0x6-8 INSWING STEEL DOOR

PART OR ASSEMBLY: TYPICAL ELEVATIONS

NO.	DATE	REVISIONS	BY
C	2/17/2010	P.E. CHANGES	GI
B	2/9/09	P.E. CHANGES	WBD
A	1/21/09	P.E. CHANGES	WBD

DATE: 6/25/08
SCALE: AS NOTED
DWG. BY: WBD
CHK. BY: S. FREY
DRAWING NO.: JW192008
SHEET 2 OF 14

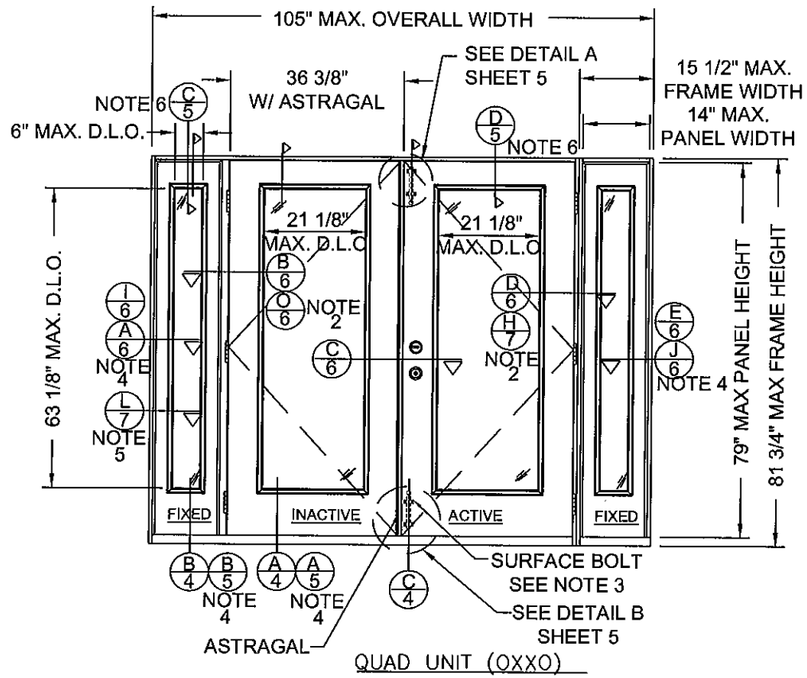

QUAD UNIT (OXXO)

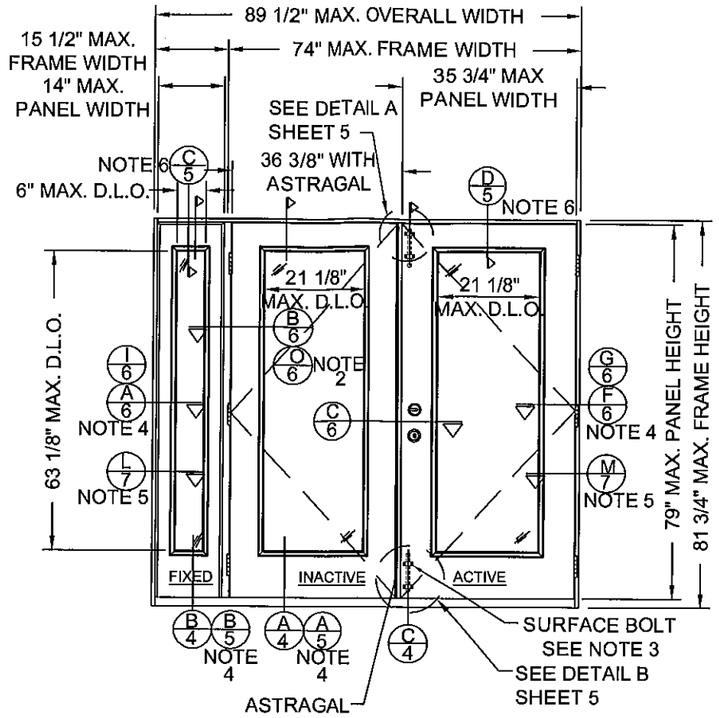

TRI UNIT (OXX) OR (XXO)

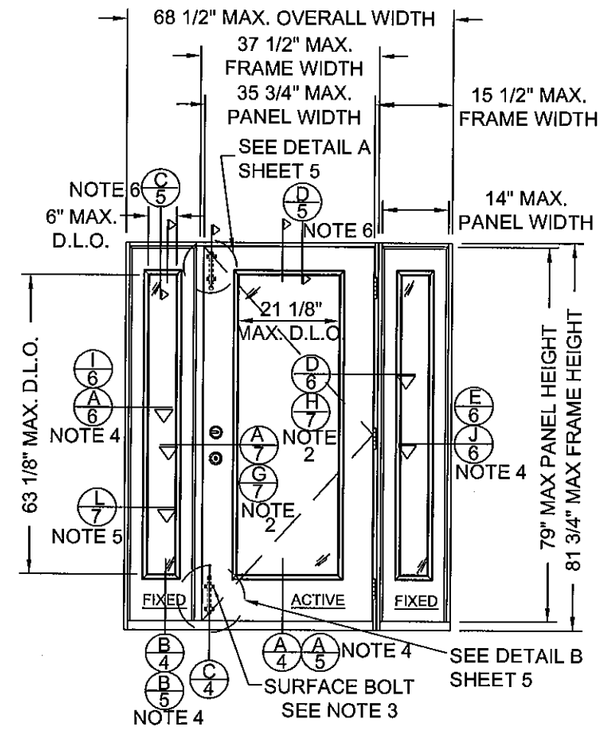

TRI UNIT (OXO)

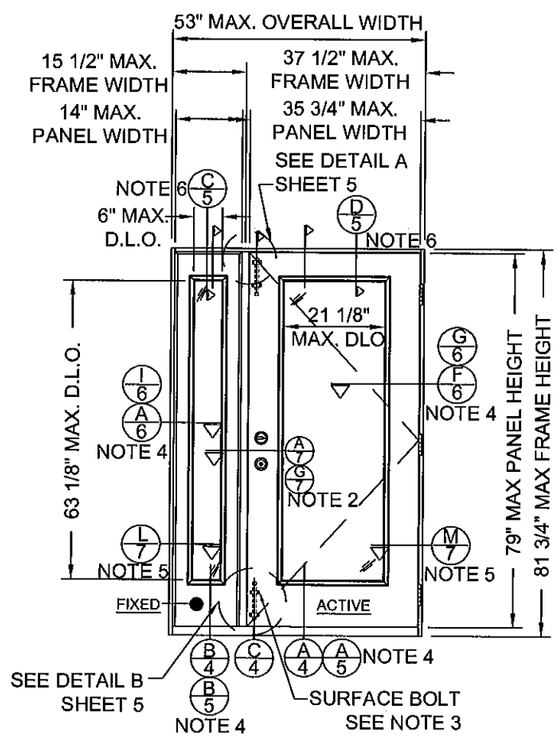

DUAL UNIT (OX) OR (XO)

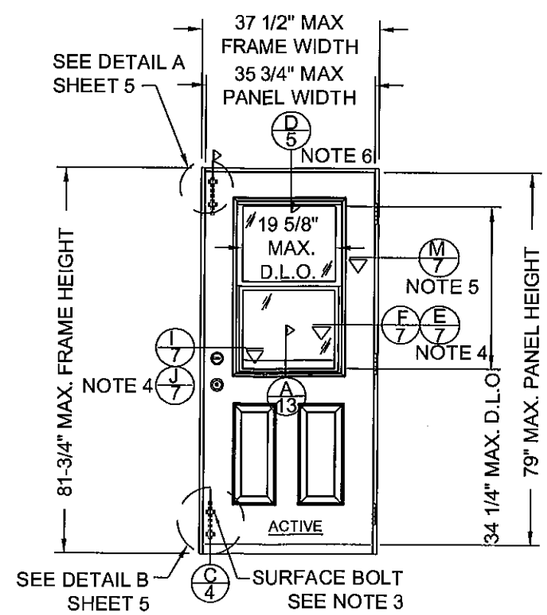

SINGLE VENT UNIT (X)

NOTES:
1 - ALL VIEWS FROM INTERIOR.
2 - MULL POSTS & DOUBLE BACK JAMBS ARE INTERCHANGEABLE. (SEE OPTIONAL CROSS SECTIONS)
3 - SURFACE BOLT NOT REQUIRED FOR APPLICATIONS REQUIRING DP-55 OR LESS.
4 - MASONRY AND CONCRETE INSTALLATION DETAILS.
5 - POSITION AND NUMBER OF ANCHORS IN HINGE JAMB, LATCH JAMB, OR SIDELITE JAMB WILL BE THE SAME REGARDLESS OF ROUGH OPENING TYPE. FOR HORIZONTAL CROSS SECTION IN 1X BUCK OPTION IN MASONRY/CONCRETE, SEE SHEET 7 FOR DETAILS.
6 - FOR VERTICAL ANCHOR IN 1X BUCK OPTION IN MASONRY/CONCRETE, SEE SHEET 5 FOR DETAILS.

Approved as complying with the Florida Building Code
Date 11/11/2010
NOA# 09-0415.07
Miami Dade Product Control Division
By

10-14-10
Kristina S. Dougherty
CertWorks LLC.
Florida P.E. No. 68455
127 W. Fairbanks Ave, Ste 438
Winter Park, FL 32789
FBPE Cert. of Authorization #28520

JELD-WEN, INC.
3737 LAKEPORT BLVD.
KLAMATH FALLS, OR, 97601
PH. 541-882-3451

PRODUCT: GLADIATOR/FINISHIELD GLAZED WOOD EDGE 12-0x6-8 INSWING STEEL DOOR

PART OR ASSEMBLY: TYPICAL ELEVATIONS

NO.	DATE	REVISIONS	BY
C	2/17/2010	P.E. CHANGES	GL
B	2/9/09	P.E. CHANGES	WBD
A	1/21/09	P.E. CHANGES	WBD

DATE: 6/25/08
SCALE: AS NOTED
DWG. BY: WBD
CHK. BY: S. FREY
DRAWING NO.: JW192008
SHEET 3 OF 14

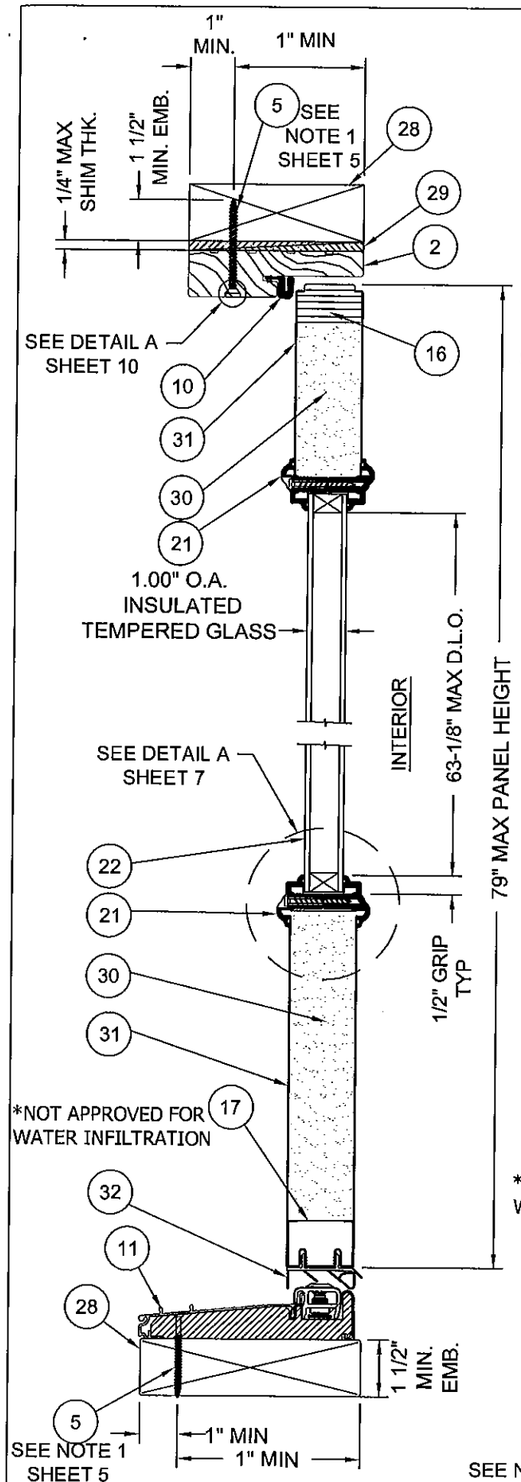

A/4 VERTICAL CROSS SECTION, ACTIVE DOOR TYP.
WOOD FRAME INSTALLATION
SCALE: 3" =1'-0"

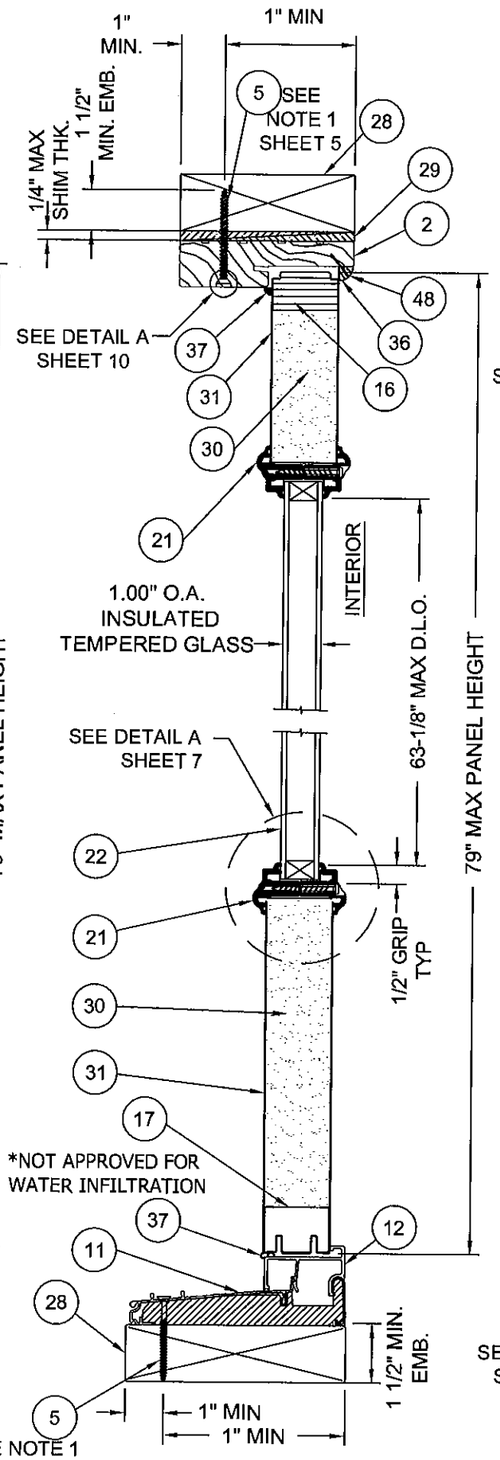

B/4 VERTICAL CROSS SECTION, SIDE LITE TYP.
WOOD FRAME INSTALLATION
SCALE: 3" =1'-0"

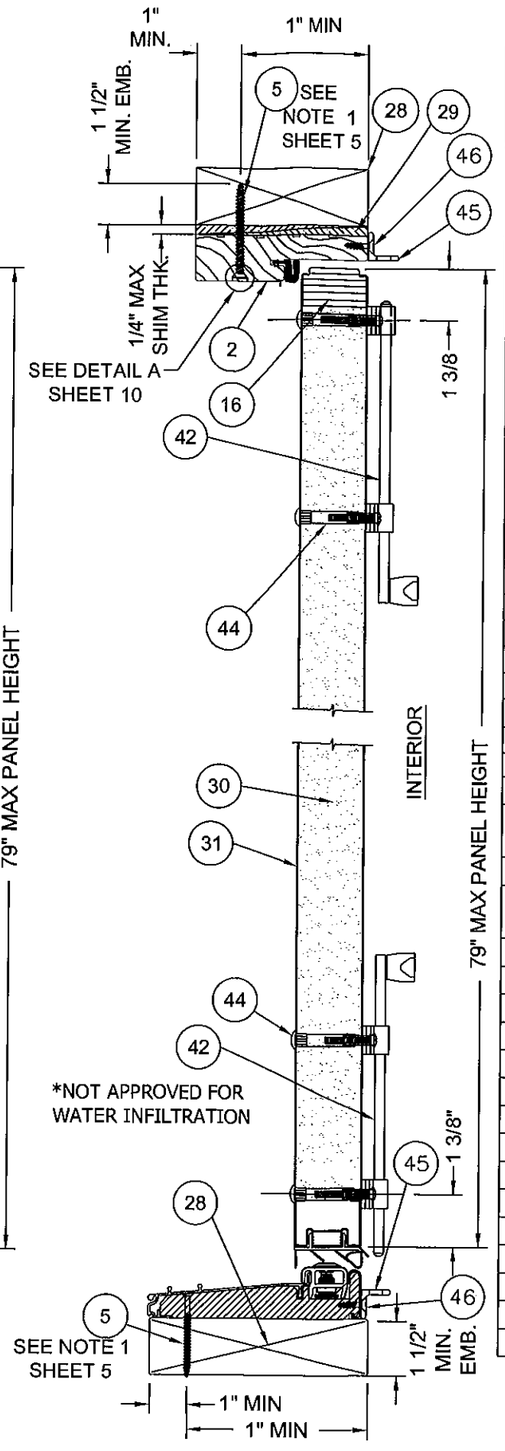

C/4 VERTICAL CROSS SECTION, SURFACE BOLTS TYP.
WOOD FRAME INSTALLATION
SCALE: 3" =1'-0"

Item	DESCRIPTION	Material
1	HINGE JAMB (1 1/4"x4-5/8" FINGERJOINTED PINE)	PINE
2	HEAD JAMB (1 1/4"x4-5/8" FINGERJOINTED PINE)	PINE
3	LATCH JAMB (1-1/4"x4-5/8" FINGERJOINTED PINE)	PINE
4	SIDELITE JAMB (1-1/4"x4-5/8" FINGERJOINTED PINE)	PINE
5	#10 PHILLIPS FLATHEAD WOOD SCREW WITH 1 1/2" MIN. EMBEDMENT	STEEL
6	4" x 4" BUTT HINGE 12GA. (.089" MIN)	STEEL
7	#9 x 3/4" PHILLIPS FLATHEAD WOOD SCREW	STEEL
8	#10 x 1 1/2" PHILLIPS FLATHEAD WOOD SCREW	STEEL
9	3/16" ITW BUILDEX TAPCON WITH 1 1/4" MIN. EMBEDMENT	STEEL
10	COMPRESSION WEATHERSTRIP (LoxSeal 650)	VINYL
11	ENDURA INSWING THRESHOLD #LZAI5625RDSR 6063-T6	AL/COMP. PVC
12	Z60 SERIES SIDELITE SEAT (ENDURA)	AL/PVC
13	EXTRUDED ASTRAGAL GLOBAL #79-WATA-OLH-R17 6063-T6 AL	ALUMINUM
14	#10 X 1" PHILLIPS PAN HEAD SHEET METAL SCREW	STEEL
15	ATA STRIKE PLATE - R4 (GLOBAL PRODUCTS)	STEEL
16	TOP RAIL (LAMINATED VENEER LUMBER) - MIN. G = 0.55	LVL
17	BOTTOM RAIL 25GA (0.018") GALVANIZED STEEL	STEEL
18	HINGE SIDE STILE (LAMINATED VENEER LUMBER) - MIN. G = 0.55	LVL
19	LATCH SIDE STILE (LAMINATED VENEER LUMBER) - MIN. G = 0.55	LVL
20	LOCK BLOCK 1.688" x 3 1/8" x 12" LG PINE - MIN. G = 0.55	PINE
21	ODL LIP-LITE FRAME #686-BKWD (NOA 07-0214.08)	PLASTIC
22	1.00" O.A. INSULATED TEMPERED GLASS	GLASS
23	16 Ga. 7/16" CROWN x 2" LONG STAPLES	STEEL
24	CORRUGATED NAIL 1/2" x 1 1/16" 25 GA.	STEEL
25	KWIKSET LOCK SERIES 400	STEEL
26	KWIKSET DEADBOLT SERIES 980	STEEL
27	#8 x 2 1/2" PHILLIPS FLATHEAD WOOD SCREW	STEEL
28	2x WOOD BUCK GRD 2 SOUTHERN YELLOW PINE - MIN. G = 0.55	WOOD
29	NON-COMPRESSION SHIM 1/4" MAX.	WOOD
30	EXPANDED POLYSTYRENE (1.0 TO 1.25lbs DENSITY) MFG BY JELD-WEN	FOAM
31	STEEL DOOR PANEL SKIN MATERIAL (25 GA GALVANIZED) A-525 COMMERCIAL QUALITY 0.018" MIN. THICK.)	STEEL GALVANIZED
32	INSWING DOOR VINYL BOTTOM SWEEP	VINYL
33	CORNER PADS 2", LOCATED AT THE BOTTOM OF EACH JAMB LEG SETTING ON TOP OF THE SILL, BEHIND THE WEATHERSTRIP	PLASTIC
34	#6 x 1 1/2" PHILLIPS WOOD SCREW	STEEL
35	SOLID MULL POST (LAMINATED VENEER LUMBER)	LVL
36	3/8" QUARTER ROUND MOULDING - MIN. G = 0.55	WOOD
37	SILICONE BEAD DOW 1199	SILICONE
38	ODL MODEL 799 VENTED HALF LITE FRAME (NOA 07-0801.05)	PLASTIC
39	0.75" OVERALL INSULATED TEMPERED GLASS (VENT LITES)	GLASS
40	DOUBLE BACK JAMB, LAMINATED VENEER LUMBER (LVL)-MIN. G =0.55	LVL
41	NOT USED	
42	IVES SURFACE BOLT #454 8.0" L X 3/4" W X 1/4" THK.	STEEL
43	ASTRAGAL THROW BOLT, STEEL ROD, 5/16 DIA. x 18"	STEEL
44	SEX BOLT 10-32 X 1-9/16 LG X 5/16 BARREL	STEEL
45	IVES SURFACE BOLT STRIKE PLATE	STEEL
46	#8 X 3/4" LG FLATHEAD WOODSCREWS FOR STRIKE PLATE	STEEL
47	1X WOOD BUCK GRD 2 SOUTHERN YELLOW PINE-MIN. G= 0.55	WOOD
48	1 1/4" BRAD NAIL 18 GA. @ 8" O.C.(HEAD) & 5" O.C. (JAMBS)	STEEL

JELD-WEN, INC.
3737 LAKEPORT BLVD.
KLAMATH FALLS, OR, 97601
PH. 541-882-3451

PRODUCT: GLADIATOR/FINISHIELD GLAZED WOOD EDGE 12-0x6-8 INSWING STEEL DOOR

PART OR ASSEMBLY: VERTICAL CROSS SECTIONS & BILL OF MATERIALS

NO.	DATE	REVISIONS	BY
C	2/17/2010	P.E. CHANGES	GL
B	2/9/09	P.E. CHANGES	WBD
A	1/21/09	P.E. CHANGES	WBD

Approved as complying with the Florida Building Code
Date 11/11/2010
NOA# 09-0415.07
Miami Dade Product Control Division
By

10-14-10
Kristina S. Daugherty
CertWorks LLC.
Florida P.E. No. 68455
127 W. Fairbanks Ave, Ste 438
Winter Park, FL 32789
FBPE Cert. of Authorization #28520

DATE: 6/25/08
SCALE: AS NOTED
DWG. BY: WBD
CHK. BY: S. FREY
DRAWING NO.: JW192008
SHEET 4 OF 14

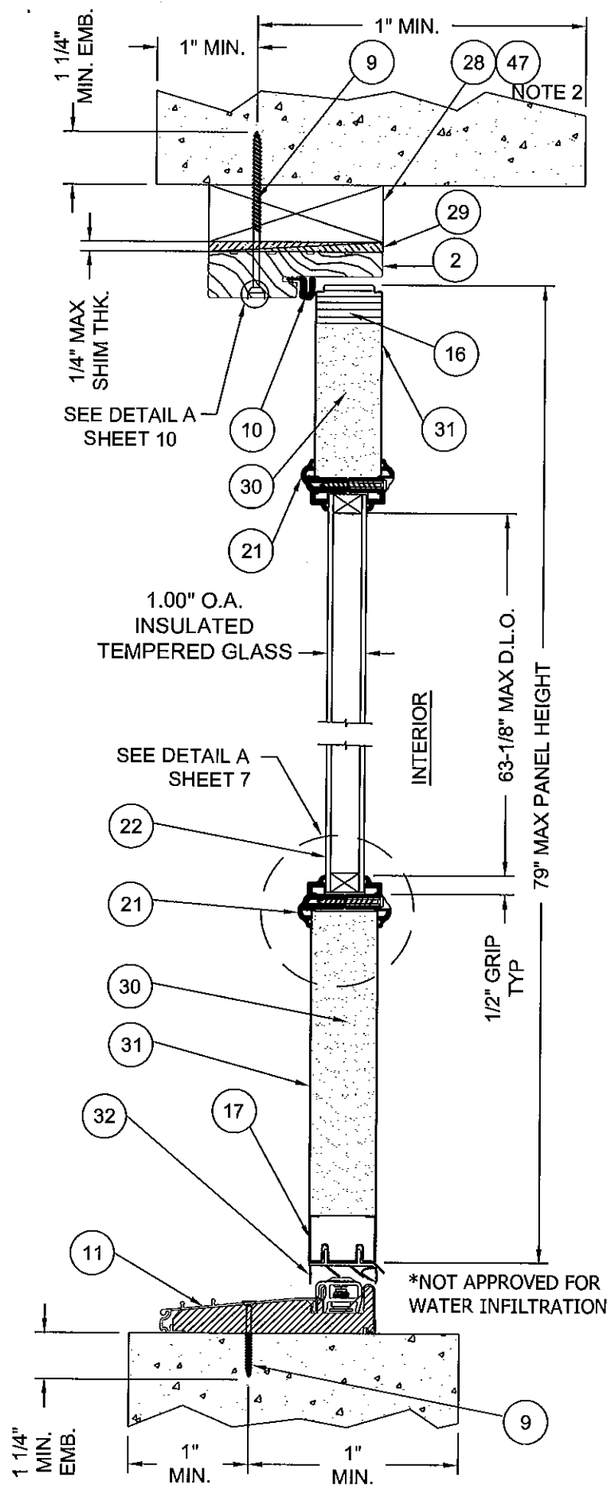

A 5 VERTICAL CROSS SECTION, ACTIVE DOOR TYP.
MASONRY AND CONCRETE INSTALLATION
SCALE: 3" =1'-0"

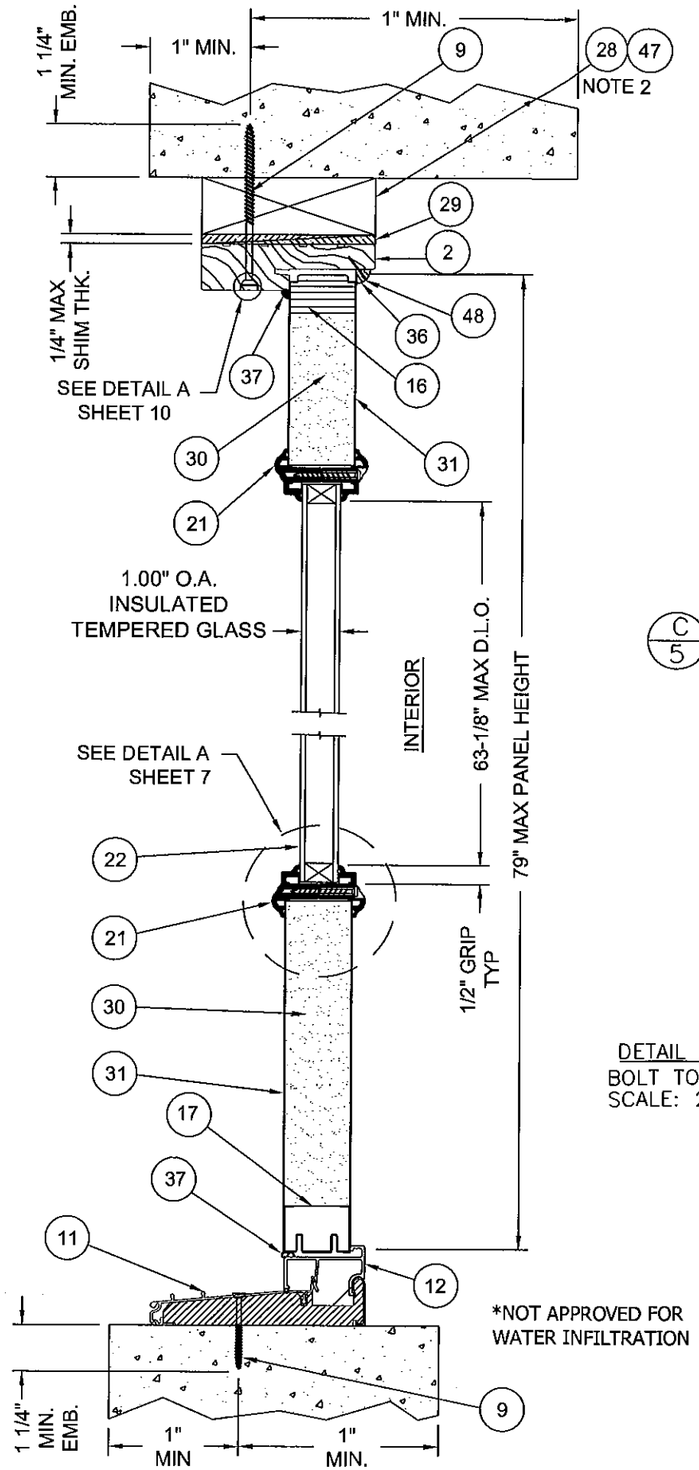

B 5 VERTICAL CROSS SECTION, SIDE LITE TYP.
MASONRY AND CONCRETE INSTALLATION
SCALE: 3" =1'-0"

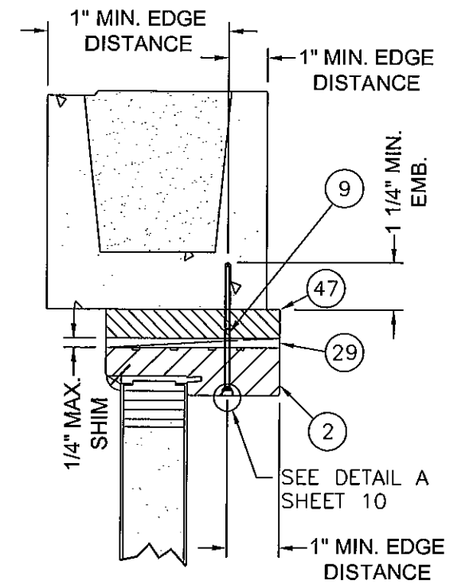

C 5 VERTICAL CROSS SECTION
FIXED UNIT 1X BUCK OPTION IN MASONRY & CONCRETE INSTALL
SCALE: 3" =1'-0"

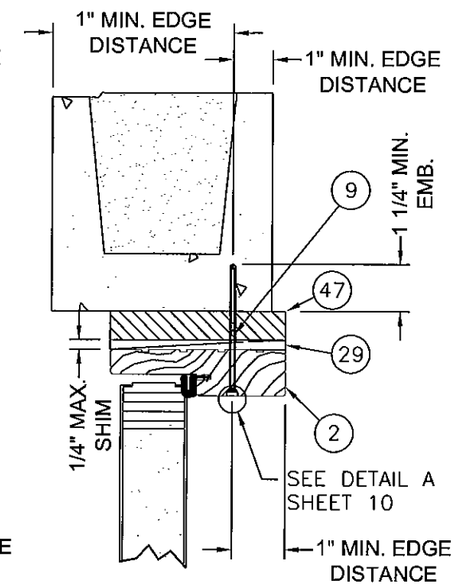

D 5 VERTICAL CROSS SECTION
OPERATING UNIT 1X BUCK OPTION IN MASONRY & CONCRETE INSTALL
SCALE: 3" =1'-0"

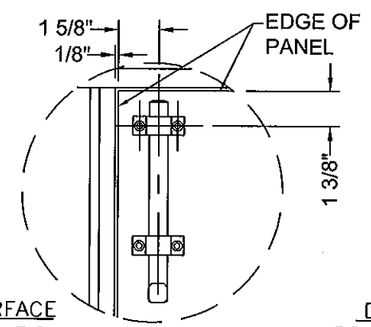

DETAIL A SURFACE
BOLT TOP LOCATION
SCALE: 2" =1'-0"

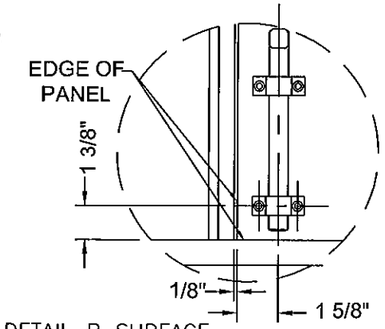

DETAIL B SURFACE
BOLT BOTTOM LOCATION
SCALE: 2" =1'-0"

NOTES:
1. FOR ANCHOR SPACING (ITEMS #5 OR #9), SEE SHEETS 8, 9, 10 & 11.
2. 1X MAY BE UTILIZED AS AN OPTION. FOR VERTICAL SECTIONS, SEE DETAILS C/5 D/5 SHEET 5. HORIZONTAL SECTIONS: DETAILS L/7 M/7 SHEET 7.
3. TAPCON MASONRY ANCHOR SPACING SAME AS WOOD ANCHOR SCREW CONFIGURATION.
4. OPTIONALLY, ANCHORS CAN BE PLACED IN NARROW SECTION OF HEAD OR JAMB AS LONG AS MINIMUM EMBEDMENT IS ACHIEVED.

Approved as complying with the Florida Building Code
Date 11/11/2010
NOA# 09-0415.07
Miami Dade Product Control Division
By

10-14-10
Kristina S. Daugherty
CertWorks LLC.
Florida P.E. No. 68455
127 W. Fairbanks Ave, Ste 438
Winter Park, FL 32789
FBPE Cert. of Authorization #28520

JELD-WEN, INC.
3737 LAKEPORT BLVD.
KLAMATH FALLS, OR, 97601
PH. 541-882-3451

PRODUCT: GLADIATOR/FINISHIELD GLAZED WOOD EDGE 12-0x6-8 INSWING STEEL DOOR
PART OR ASSEMBLY: VERTICAL CROSS SECTIONS

NO.	DATE	REVISIONS	BY
C	2/17/2010	P.E. CHANGES	GL
B	2/9/09	P.E. CHANGES	WBD
A	1/21/09	P.E. CHANGES	WBD

DATE: 6/25/08
SCALE: AS NOTED
DWG. BY: WBD
CHK. BY: S. FREY
DRAWING NO.: JW192008
SHEET 5 OF 14

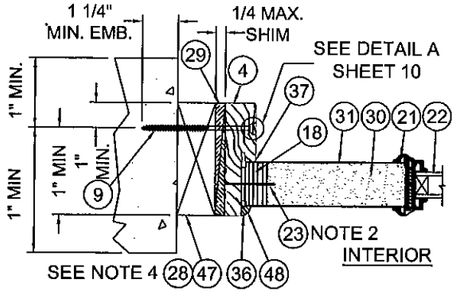

A / 6 HORIZONTAL CROSS SECTION
MASONRY & CONCRETE INSTALL
SCALE: 2"=1'-0"

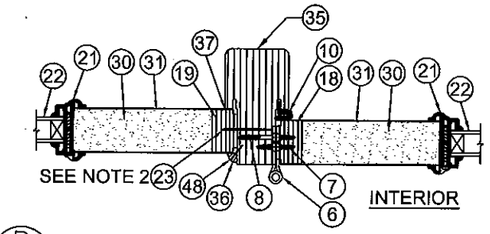

B / 6 HORIZONTAL CROSS SECTION
SCALE: 2"=1'-0"

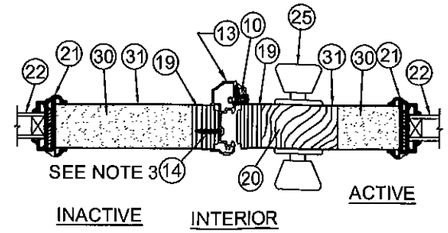

C / 6 HORIZONTAL CROSS SECTION
SCALE: 2"=1'-0"

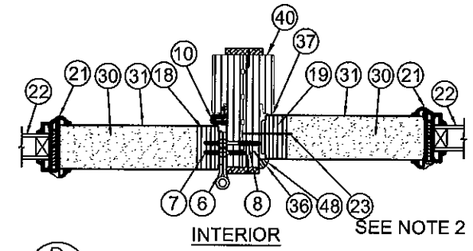

D / 6 HORIZONTAL CROSS SECTION
SCALE: 2"=1'-0"

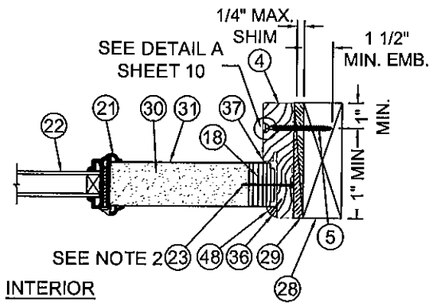

E / 6 HORIZONTAL CROSS SECTION
WOOD INSTALLATION
SCALE: 2"=1'-0"

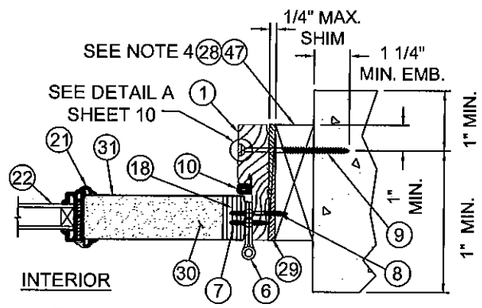

F / 6 HORIZONTAL CROSS SECTION
MASONRY & CONCRETE INSTALL
SCALE: 2"=1'-0"

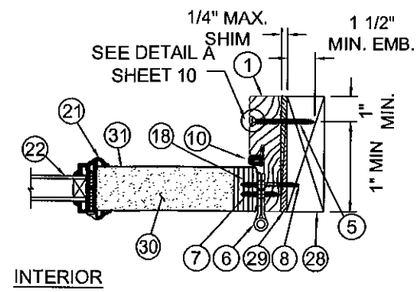

G / 6 HORIZONTAL CROSS SECTION
WOOD INSTALLATION
SCALE: 2"=1'-0"

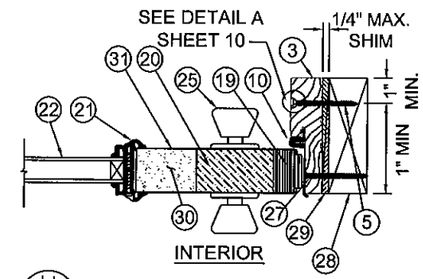

H / 6 HORIZONTAL CROSS SECTION
WOOD INSTALLATION
SCALE: 2"=1'-0"

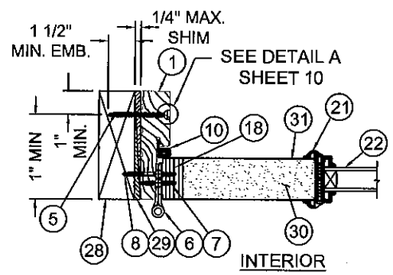

L / 6 HORIZONTAL CROSS SECTION
WOOD INSTALLATION
SCALE: 2"=1'-0"

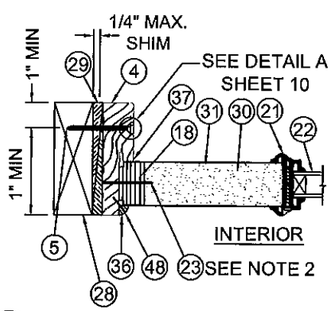

I / 6 HORIZONTAL CROSS SECTION
WOOD INSTALLATION
SCALE: 2"=1'-0"

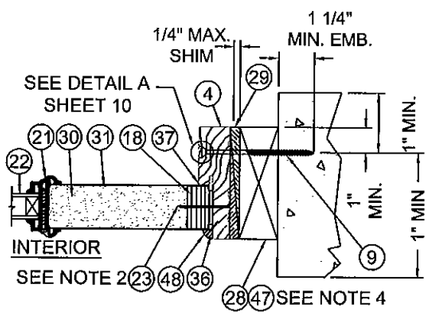

J / 6 HORIZONTAL CROSS SECTION
MASONRY & CONCRETE INSTALL
SCALE: 2"=1'-0"

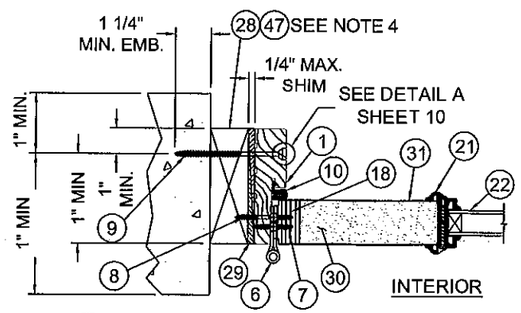

K / 6 HORIZONTAL CROSS SECTION
MASONRY & CONCRETE INSTALL
SCALE: 2"=1'-0"

NOTES:

1. FOR ANCHOR SPACING (ITEMS #5 OR #9), SEE SHEETS 8, 9, 10 & 11.
2. SPACING FOR #23 FROM TOP OF SIDELITE DOWN (SEE SHEET 9).
3. ASTRAGAL SCREW PATTERN SPACING FOR #13:
   FROM BOTTOM: 1/2", 2", 3 1/2", 20", 24 3/4".
   FROM TOP: 1/2", 2", 3 1/2", 20", 24 3/4", 39".
4. 1X MAY BE UTILIZED AS AN OPTION. FOR VERTICAL SECTIONS, SEE DETAILS C/5 D/5 SHEET 5. HORIZONTAL SECTIONS: DETAILS K/7 L/7 SHEET 7.
5. TAPCON MASONRY ANCHOR SPACING SAME AS WOOD ANCHOR SCREW CONFIGURATION.
6. OPTIONALLY, ANCHOR CAN BE PLACED IN NARROW SECTION OF HEAD OR JAMB AS LONG AS MINIMUM EMBEDMENT IS ACHIEVED.

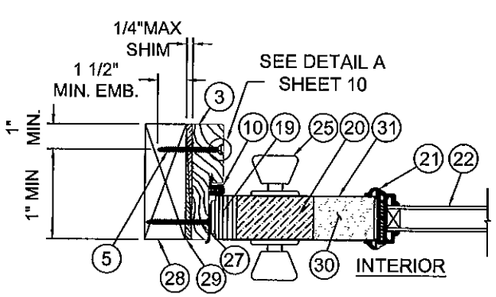

M / 6 HORIZONTAL CROSS SECTION
WOOD INSTALLATION
SCALE: 2"=1'-0"

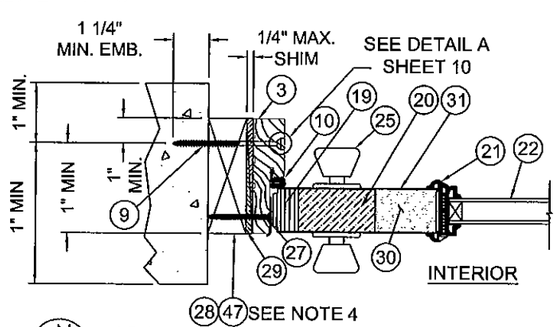

N / 6 HORIZONTAL CROSS SECTION
MASONRY & CONCRETE INSTALL
SCALE: 2"=1'-0"

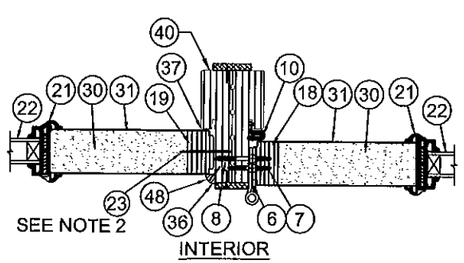

O / 6 HORIZONTAL CROSS SECTION
SCALE: 2"=1'-0"

Approved as complying with the Florida Building Code
Date 11/11/2010
NOA# 09-0415.07
Miami Dade Product Control Division
By

10-14-10
Kristina S. Daugherty
CertWorks LLC.
Florida P.E. No. 68455
127 W. Fairbanks Ave, Ste 438
Winter Park, FL 32789
FBPE Cert. of Authorization #28520

JELD-WEN, INC.
3737 LAKEPORT BLVD.
KLAMATH FALLS, OR, 97601
PH. 541-882-3451

PRODUCT: GLADIATOR/FINISHIELD GLAZED WOOD EDGE 12-0x6-8 INSWING STEEL DOOR

PART OR ASSEMBLY: HORIZONTAL CROSS SECTIONS

NO.	DATE	REVISIONS	BY
C	2/17/2010	P.E. CHANGES	GL
B	2/9/09	P.E. CHANGES	WBD
A	1/21/09	P.E. CHANGES	WBD

DATE: 6/25/08
SCALE: AS NOTED
DWG. BY: WBD
CHK. BY: S. FREY
DRAWING NO.: JW192008
SHEET 6 OF 14

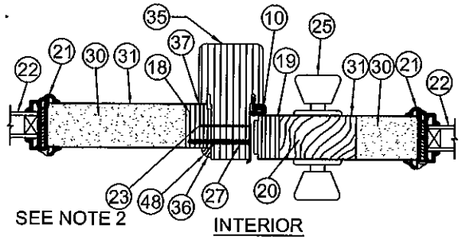

A/7 HORIZONTAL CROSS SECTION
SCALE: 2"=1'-0"

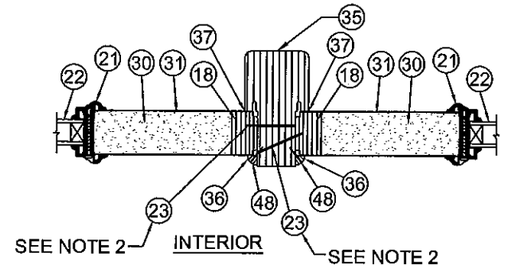

B/7 HORIZONTAL CROSS SECTION
SCALE: 2"=1'-0"

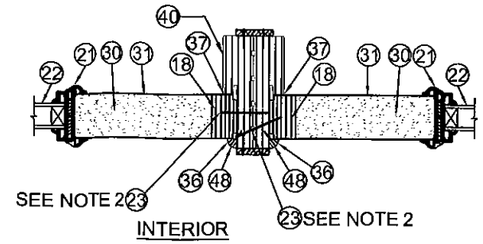

C/7 HORIZONTAL CROSS SECTION
SCALE: 2"=1'-0"

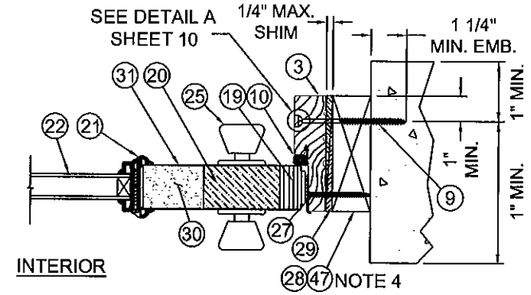

D/7 HORIZONTAL CROSS SECTION
MASONRY & CONCRETE INSTALL
SCALE: 2"=1'-0"

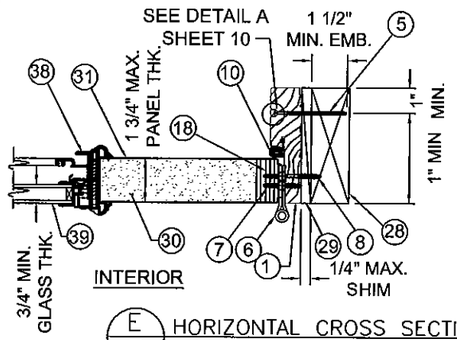

E/7 HORIZONTAL CROSS SECTION
WOOD INSTALLATION
SCALE: 2"=1'-0"

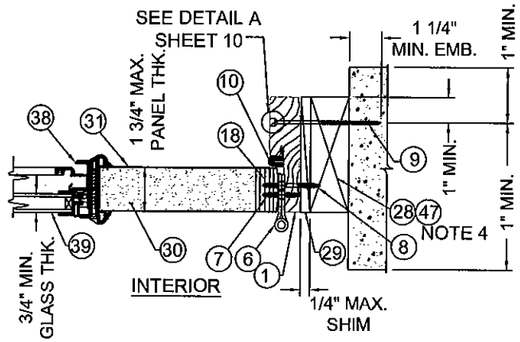

F/7 HORIZONTAL CROSS SECTION
MASONRY & CONCRETE INSTALL
SCALE: 2"=1'-0"

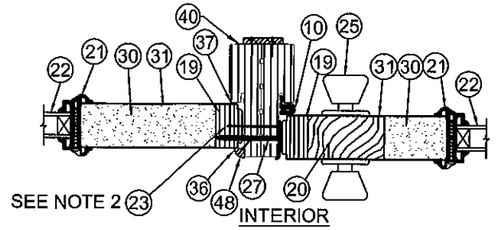

G/7 HORIZONTAL CROSS SECTION
SCALE: 2"=1'-0"

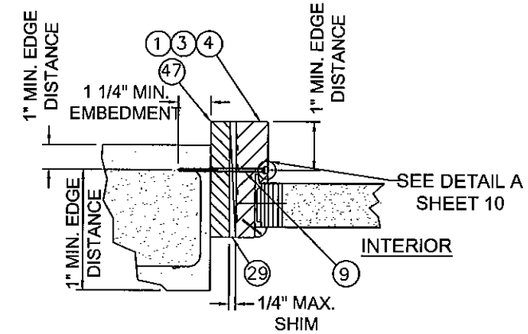

K/7 HORIZONTAL CROSS SECTION
FIXED UNIT 1X BUCK OPTION IN
MASONRY & CONCRETE INSTALL
(LEFT-HAND ANCHOR SHOWN, RIGHT-HAND ANCHOR SIMILAR)

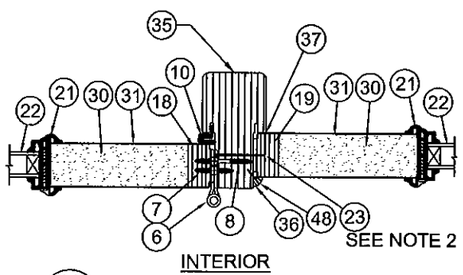

H/7 HORIZONTAL CROSS SECTION
SCALE: 2"=1'-0"

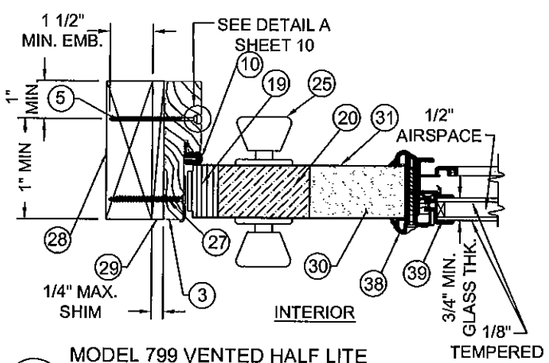

I/7 MODEL 799 VENTED HALF LITE
HORIZONTAL CROSS SECTION
WOOD INSTALLATION
SCALE: 3" =1'-0"

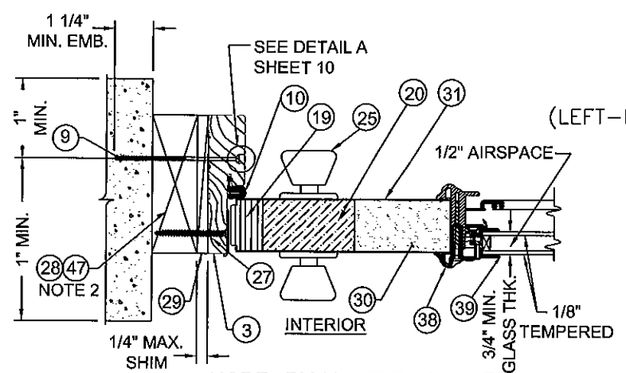

J/7 MODEL 799 VENTED HALF LITE
HORIZONTAL CROSS SECTION
MASONRY AND CONCRETE INSTALLATION
SCALE: 3" =1'-0"

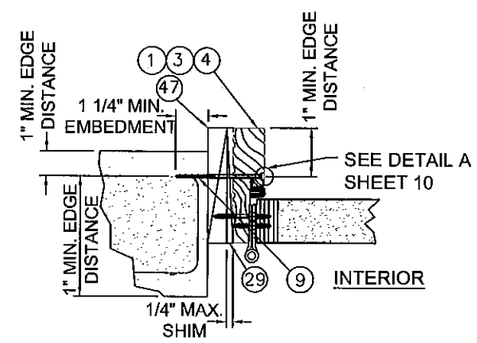

L/7 HORIZONTAL CROSS SECTION
OPERATING UNIT 1X BUCK OPTION IN
MASONRY & CONCRETE INSTALL
(LEFT-HAND ANCHOR SHOWN, RIGHT-HAND ANCHOR SIMILAR)

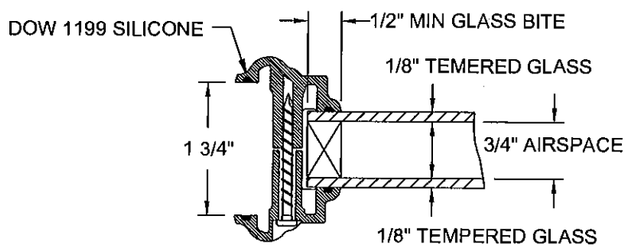

GLAZING DETAIL A
SCALE: 6"=1'-0"

NOTES:

1. FOR ANCHOR SPACING (ITEMS #5 OR #9), SEE SHEETS 8, 9, 10 & 11.
2. SPACING FOR #23 FROM TOP OF SIDELITE DOWN (SEE SHEET 9).
3. ASTRAGAL SCREW PATTERN SPACING FOR #13:
   FROM BOTTOM: 1/2", 2", 3 1/2", 20", 24 3/4".
   FROM TOP: 1/2", 2", 3 1/2", 20", 24 3/4", 39".
4. 1X MAY BE UTILIZED AS AN OPTION. FOR VERTICAL SECTIONS, SEE DETAILS C/5 D/5 SHEET 5. HORIZONTAL SECTIONS: DETAILS K/7 L/7 SHEET 7.
5. TAPCON MASONRY ANCHOR SPACING SAME AS WOOD ANCHOR SCREW CONFIGURATION.
6. OPTIONALLY, ANCHOR CAN BE PLACED IN NARROW SECTION OF HEAD OR JAMB AS LONG AS MINIMUM EMBEDMENT IS ACHIEVED.

Approved as complying with the Florida Building Code
Date 11/11/2010
NOA# 09-0415.07
Miami Dade Product Control Division
By

10-14-10
Kristina S. Dougherty
CertWorks LLC.
Florida P.E. No. 68455
127 W. Fairbanks Ave, Ste 438
Winter Park, FL 32789
FBPE Cert. of Authorization #28520

JELD-WEN, INC.
3737 LAKEPORT BLVD.
KLAMATH FALLS, OR, 97601
PH. 541-882-3451

PRODUCT: GLADIATOR/FINISHIELD GLAZED WOOD EDGE 12-0x6-8 INSWING STEEL DOOR

PART OR ASSEMBLY: HORIZONTAL CROSS SECTIONS

NO.	DATE	REVISIONS	BY
C	2/17/2010	P.E. CHANGES	GL
B	2/9/09	P.E. CHANGES	WBD
A	1/21/09	P.E. CHANGES	WBD

DATE: 6/25/08
SCALE: AS NOTED
DWG. BY: WBD
CHK. BY: S. FREY
DRAWING NO.: JW192008
SHEET 7 OF 14

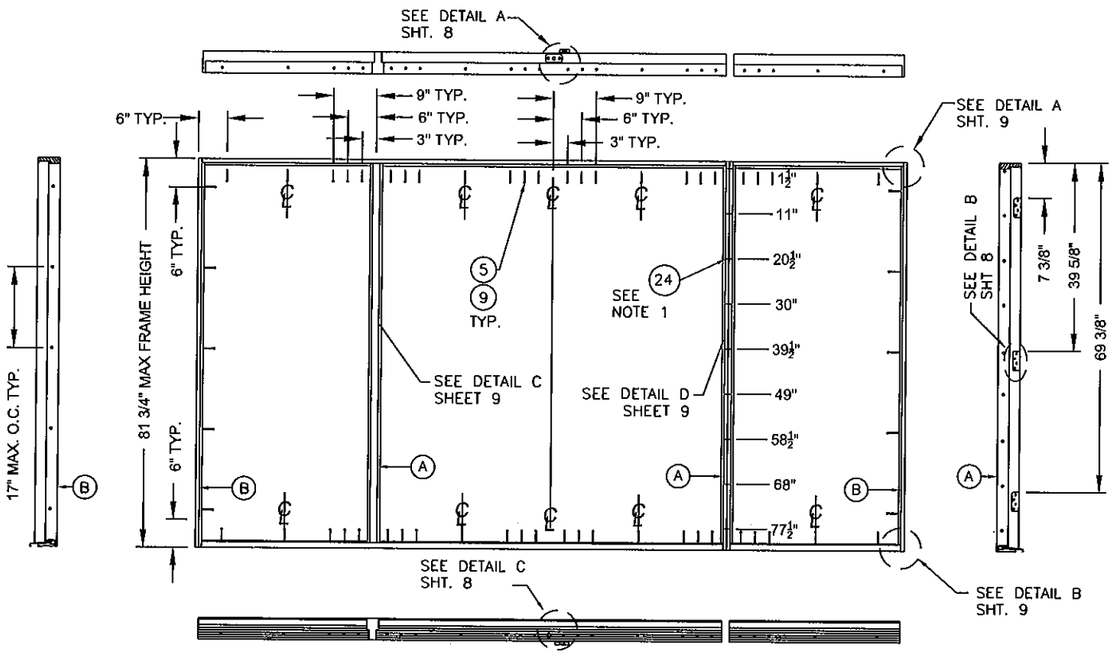

ANCHORING LOCATIONS QUAD UNIT OXXO
INSWING UNIT W/2 SIDELITES (OXXO)

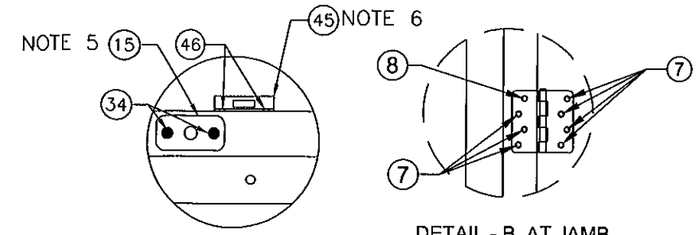

DETAIL - A AT HEAD
SCALE: 1/2"=1'-0"

DETAIL - B AT JAMB
SCALE: 1/2"=1'-0"

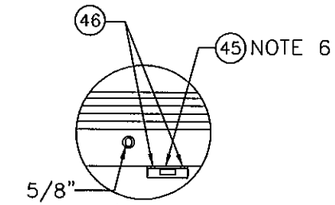

5/8" HOLE W/PLASTIC LINER 3/8" ID SEE NOTE 5

DETAIL - C AT SILL
SCALE: 1/2"=1'-0"

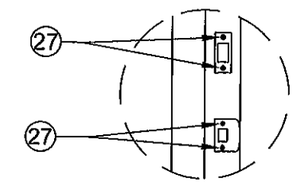

DETAIL - D AT JAMB
SCALE: 1/2"=1'-0"

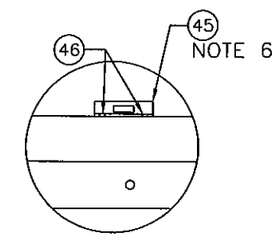

DETAIL - E AT HEAD
SCALE: 1/2"=1'-0"

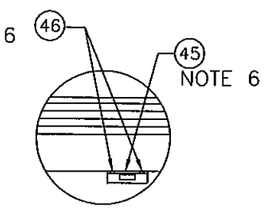

DETAIL - F AT SILL
SCALE: 1/2"=1'-0"

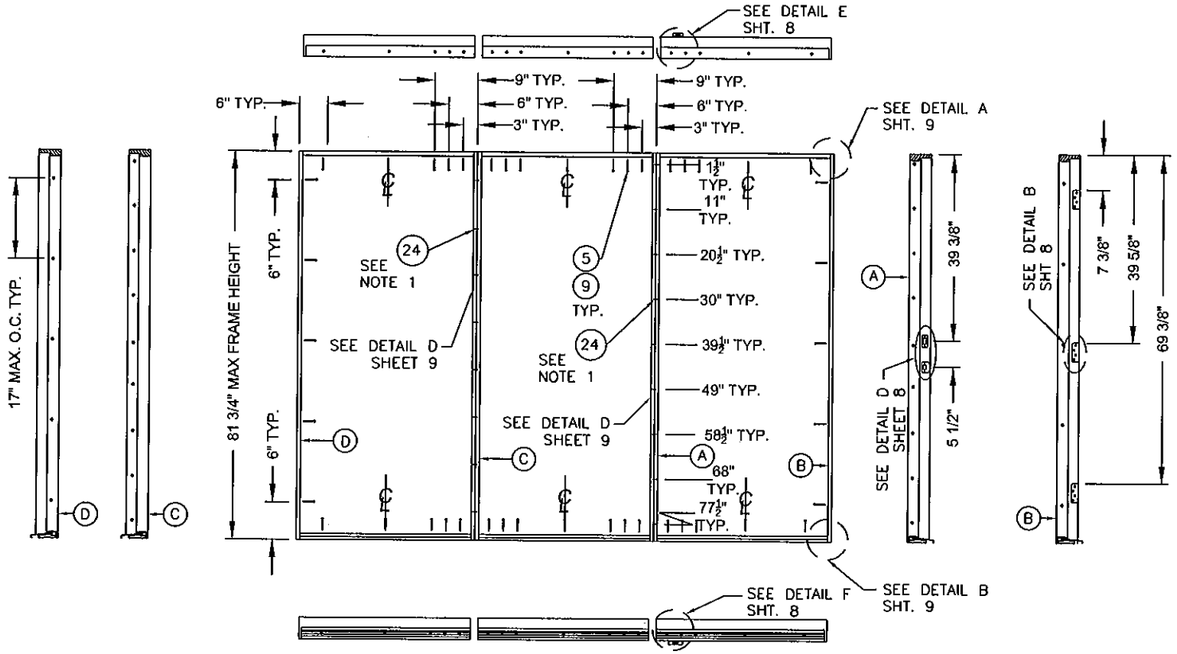

ANCHORING LOCATIONS TRI UNIT OOX
INSWING UNIT W/2 SIDELITES (OOX)

NOTES:

1. CORRUGATED FASTENERS TO BE APPLIED ON BOTH INTERIOR AND EXTERIOR SURFACES AT SPACING SHOWN, +/−1", FOR TOTAL OF NINE FASTENERS PER SIDE.
2. CORRUGATED FASTENERS ARE UTILIZED ON DOUBLE BACK JAMBS ONLY. OMIT ON SOLID MULL POST CONFIGURATIONS.
3. SEE SHEET 9 FOR SIDELITE FASTENER LOCATIONS.
4. SEE SHEET 9 FOR SIDELITE BRAD NAIL LOCATIONS FOR QUARTER ROUND MOULDING ATTACHMENT.
5. ASTRAGAL THROW BOLT HOLES AT HEAD ARE DRILLED AT FABRICATION WHEN ASTRAGAL IS APPLIED AND THROW BOLT LOCATIONS ARE DETERMINED. SILL THROW BOLT HOLE FOR PLASTIC LINER IS DRILLED IN THE FIELD FOR PROPER LINER PLACEMENT. TOP ASTRAGAL PLATE IS INSTALLED IN THE FIELD.
6. TOP AND BOTTOM SURFACE BOLTS ARE APPLIED AT FABRICATION. SURFACE BOLT STRIKE PLATES ARE ATTACHED IN THE FIELD.

Approved as complying with the Florida Building Code
Date 11/11/2010
NOA# 09-0415.07
Miami Dade Product Control Division
By

10-14-10
Kristina S. Daugherty
CertWorks LLC.
Florida P.E. No. 68455
127 W. Fairbanks Ave, Ste 438
Winter Park, FL 32789
FBPE Cert. of Authorization #28520

JELD-WEN, INC.
3737 LAKEPORT BLVD.
KLAMATH FALLS, OR, 97601
PH. 541-882-3451

PRODUCT: GLADIATOR/FINISHIELD GLAZED WOOD EDGE 12-0x6-8 INSWING STEEL DOOR

PART OR ASSEMBLY: ANCHORING LOCATIONS

NO.	DATE	REVISIONS	BY
C	2/17/2010	P.E. CHANGES	GL
B	2/9/09	P.E. CHANGES	WBD
A	1/21/09	P.E. CHANGES	WBD

DATE: 6/25/08
SCALE: AS NOTED
DWG. BY: WBD
CHK. BY: S. FREY
DRAWING NO.: JW192008
SHEET 8 OF 14

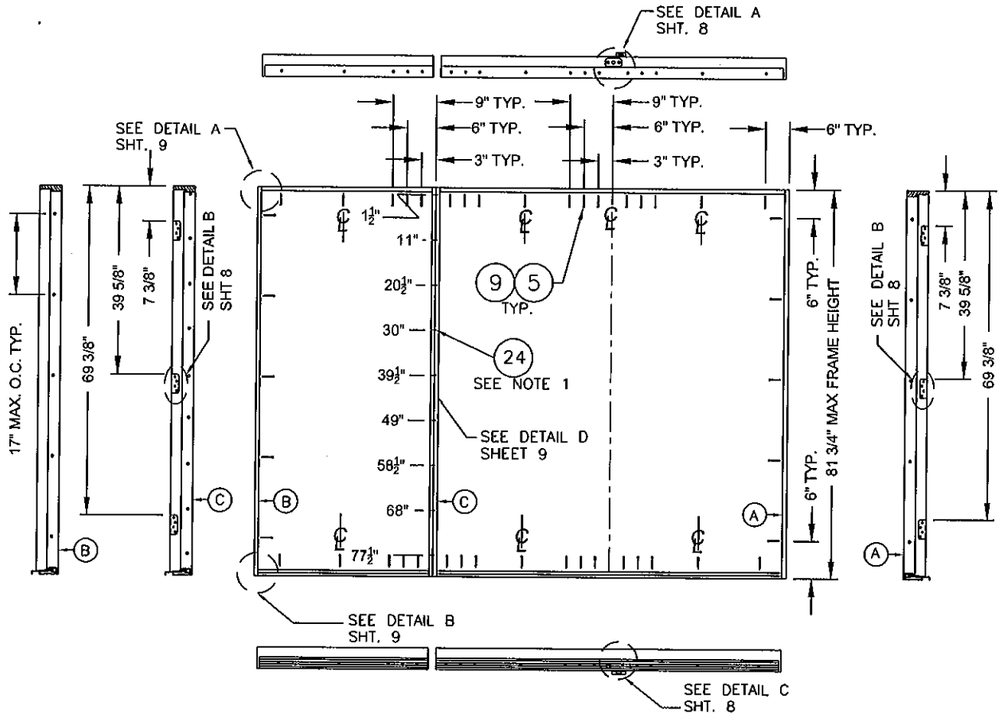

ANCHORING LOCATIONS DOUBLE INSWING UNIT W/ 1 SIDELITE (OXX)
SCALE: 3/8" =1'-0"

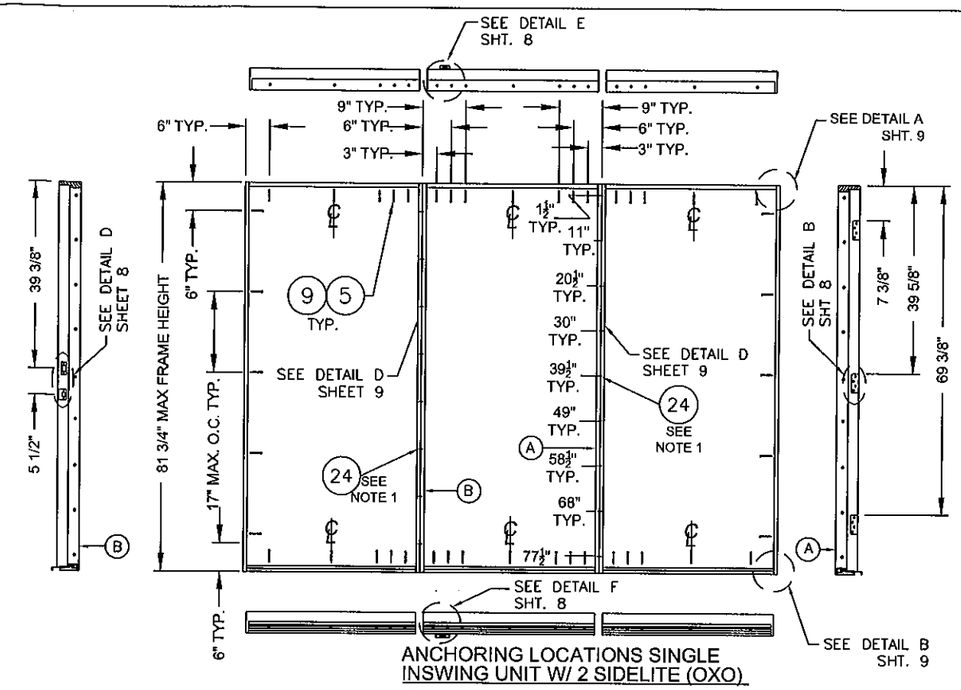

ANCHORING LOCATIONS SINGLE INSWING UNIT W/ 2 SIDELITE (OXO)
SCALE: 3/8" =1'-0"

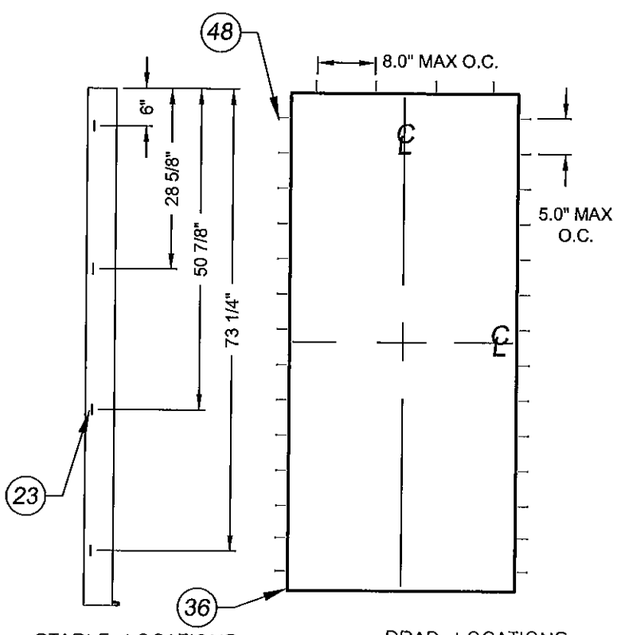

STAPLE LOCATIONS TYPICAL FOR ALL SIDELITES
SCALE: 3/8" = 1'-0"

BRAD LOCATIONS TYPICAL FOR ALL SIDELITES
SCALE: 3/8" = 1'-0"

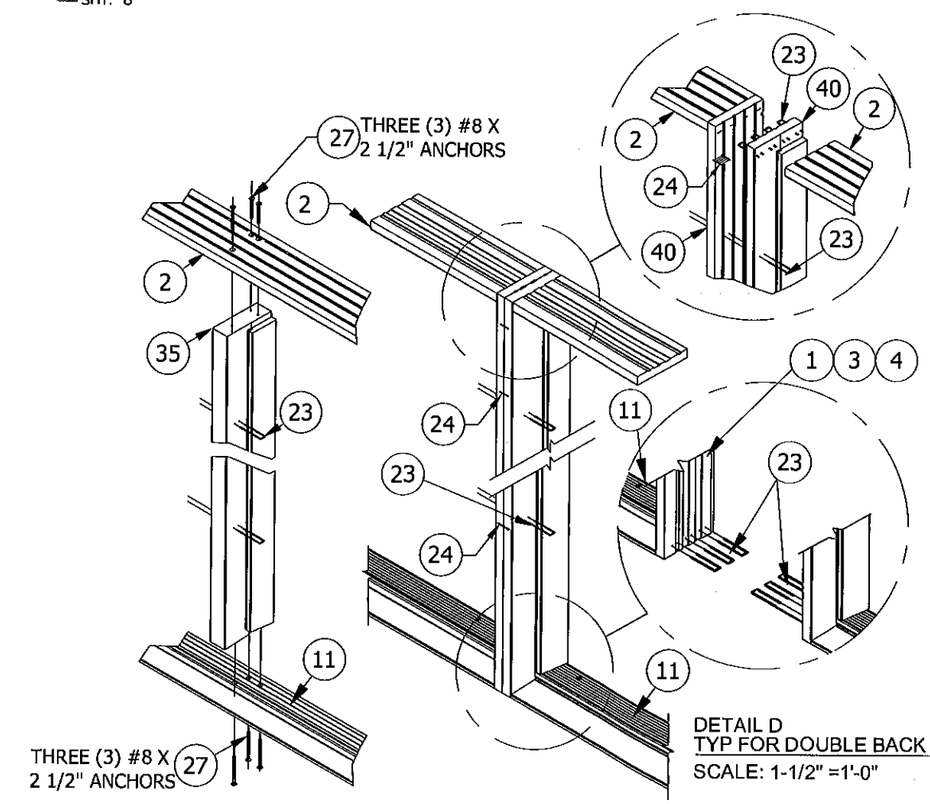

DETAIL C
TYP FOR MULL POST
SCALE: 1-1/2" =1'-0"

DETAIL D
TYP FOR DOUBLE BACK JAMB
SCALE: 1-1/2" =1'-0"

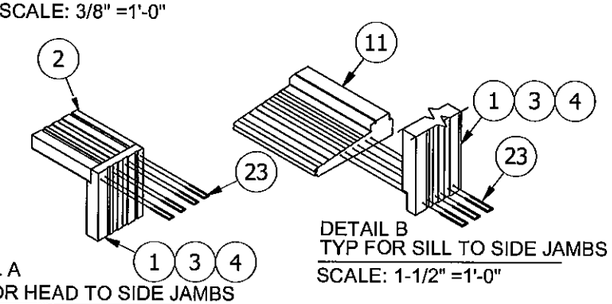

DETAIL A
TYP FOR HEAD TO SIDE JAMBS
SCALE: 1-1/2" =1'-0"

DETAIL B
TYP FOR SILL TO SIDE JAMBS
SCALE: 1-1/2" =1'-0"

NOTES:

1. CORRUGATED FASTENERS TO BE APPLIED ON BOTH INTERIOR AND EXTERIOR SURFACES AT SPACING SHOWN, +/-1", FOR TOTAL OF NINE FASTENERS PER SIDE.
2. CORRUGATED FASTENERS ARE UTILIZED ON DOUBLE BACK JAMBS ONLY. OMIT ON SOLID MULL POST CONFIGURATIONS.
3. SEE SHT 9 FOR SIDELITE FASTENER LOCATIONS.
4. SEE SHT 9 FOR SIDELITE BRAD NAIL LOCATIONS FOR QUARTER ROUND MOLDING ATTACHMENT.
5. OPTIONALLY, ANCHORS (ITEMS #5 OR #9) CAN BE PLACED IN NARROW SECTION OF JAMB OR HEAD AS LONG AS MINIMUM EMBEDMENT IS MET.
6. ALL VIEWS FROM INTERIOR.

Approved as complying with the Florida Building Code
Date 11/11/2010
NOA# 09-0415.07
Miami Dade Product Control Division
By

10-14-10
Kristina S. Dougherty
CertWorks LLC.
Florida P.E. No. 68455
127 W. Fairbanks Ave, Ste 438
Winter Park, FL 32789
FBPE Cert. of Authorization #28520

JELD-WEN, INC.
3737 LAKEPORT BLVD.
KLAMATH FALLS, OR, 97601
PH. 541-882-3451

PRODUCT: GLADIATOR/FINISHIELD GLAZED WOOD EDGE 12-0x6-8 INSWING STEEL DOOR

PART OR ASSEMBLY: ANCHORING LOCATIONS

NO.	DATE	REVISIONS	BY
C	2/17/2010	P.E. CHANGES	GL
B	2/9/09	P.E. CHANGES	WBD
A	1/21/09	P.E. CHANGES	WBD

DATE: 6/25/08
SCALE: AS NOTED
DWG. BY: WBD
CHK. BY: S. FREY
DRAWING NO.: JW192008
SHEET 9 OF 14

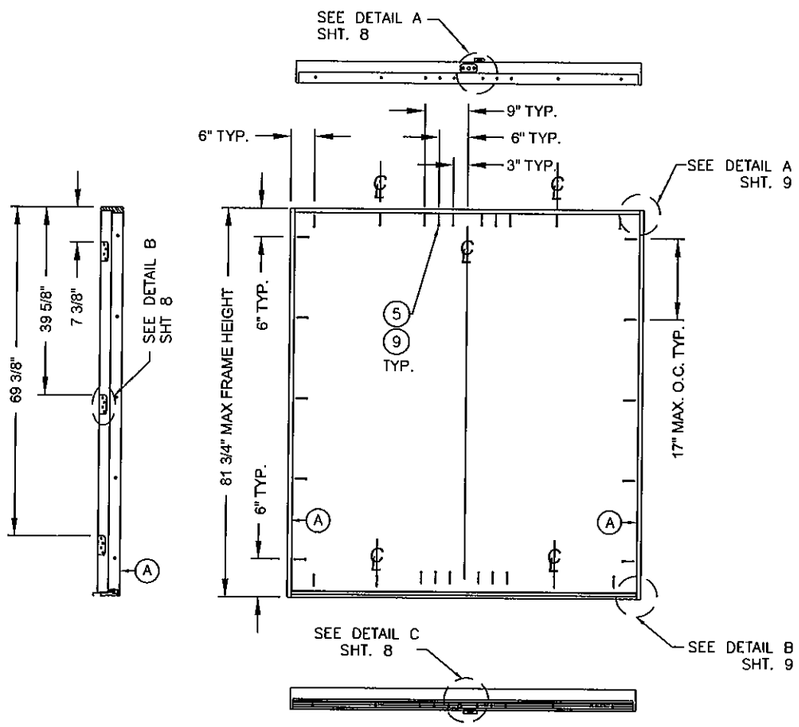

ANCHORING LOCATIONS
DOUBLE INSWING UNIT (XX)
SCALE: 3/8" =1'-0"

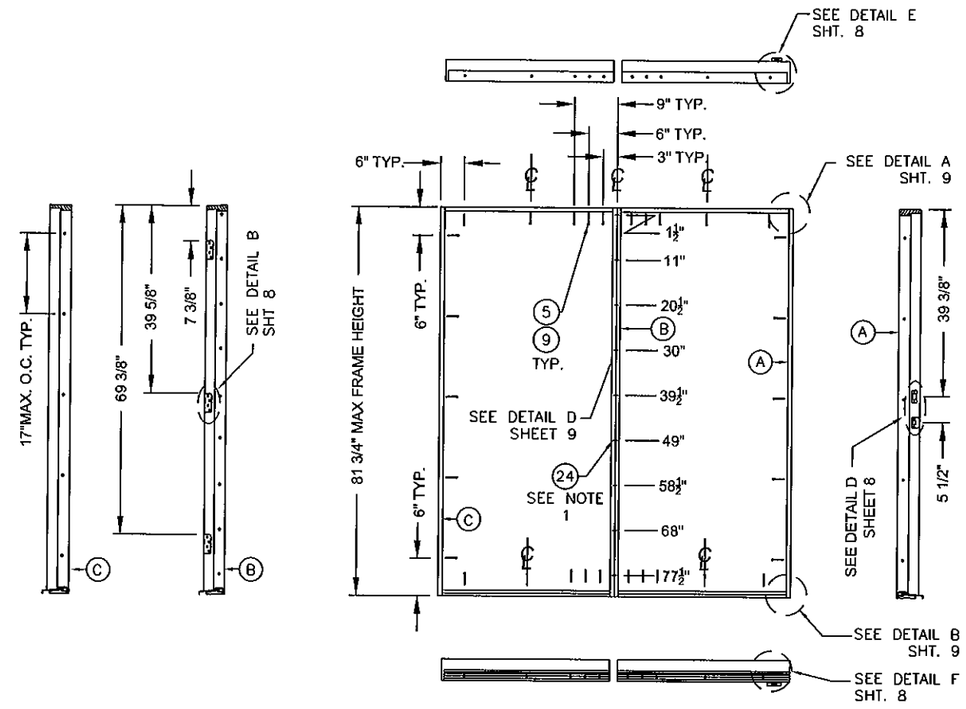

ANCHORING LOCATIONS SINGLE
INSWING UNIT W/ 1 SIDELITE (OX) OR (XO)
SCALE: 3/8" =1'-0"

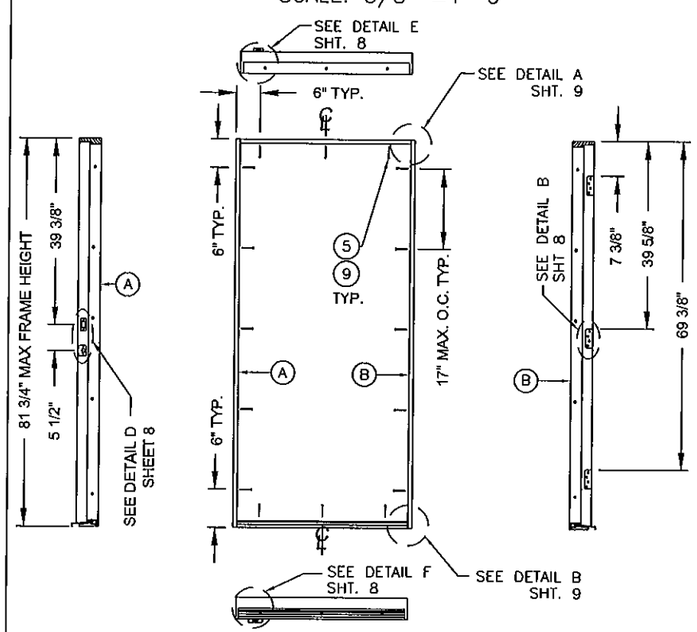

ANCHORING LOCATIONS SINGLE
INSWING UNIT X
SCALE: 3/8" =1'-0"

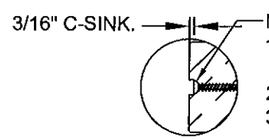

NOTE
1-USE #10 WOOD INSTALLATION SCREW W/ 1.50" MIN. EMBEDMENT
WHEN INSTALLING INTO WOOD SUBSTRATE AT HEAD & JAMBS.
2-USE #8 x 2 1/2" PFH WOOD SCREW WHEN INSTALLING INTO MULLIONS.
3-USE 3/16" ITW TAPCON ANCHOR W/ 1 1/4" MIN. EMBED.
WHEN INSTALLING INTO CONCRETE/MASONRY SUBSTRATE AT SIDELITE SILLS.

DETAIL – A
SCALE: 1/4" =1'-0"

NOTES:

1. CORRUGATED FASTENERS TO BE APPLIED ON BOTH INTERIOR AND EXTERIOR SURFACES AT SPACING SHOWN, +/-1", FOR TOTAL OF NINE FASTENERS PER SIDE.
2. CORRUGATED FASTENERS ARE UTILIZED ON DOUBLE BACK JAMBS ONLY. OMIT ON SOLID MULL POST CONFIGURATIONS.
3. SEE SHT 9 FOR SIDELITE FASTENER LOCATIONS.
4. SEE SHT 9 FOR SIDELITE BRAD NAIL LOCATIONS FOR QUARTER ROUND MOLDING ATTACHMENT.
5. OPTIONALLY, ANCHORS (ITEMS #5 OR #9) CAN BE PLACED IN NARROW SECTION OF JAMB OR HEAD AS LONG AS MINIMUM EMBEDMENT IS MET.
6. ALL VIEWS FROM INTERIOR.

Approved as complying with the Florida Building Code
Date 11/14/2010
NOA# 09-0415.07
Miami Dade Product Control Division
By

10-14-10
Kristina S. Daugherty
CertWorks LLC.
Florida P.E. No. 68455
127 W. Fairbanks Ave, Ste 438
Winter Park, FL 32789
FBPE Cert. of Authorization #28520

JELD-WEN, INC.
3737 LAKEPORT BLVD.
KLAMATH FALLS, OR, 97601
PH. 541-882-3451

PRODUCT: GLADIATOR/FINISHIELD GLAZED WOOD EDGE 12-0x6-8 INSWING STEEL DOOR

PART OR ASSEMBLY: ANCHORING LOCATIONS & DETAILS

NO.	DATE	REVISIONS	BY
C	2/17/2010	P.E. CHANGES	GL
B	2/9/09	P.E. CHANGES	WBD
A	1/21/09	P.E. CHANGES	WBD

DATE: 6/25/08
SCALE: AS NOTED
DWG. BY: WBD
CHK. BY: S. FREY
DRAWING NO.: JW192008
SHEET 10 OF 14

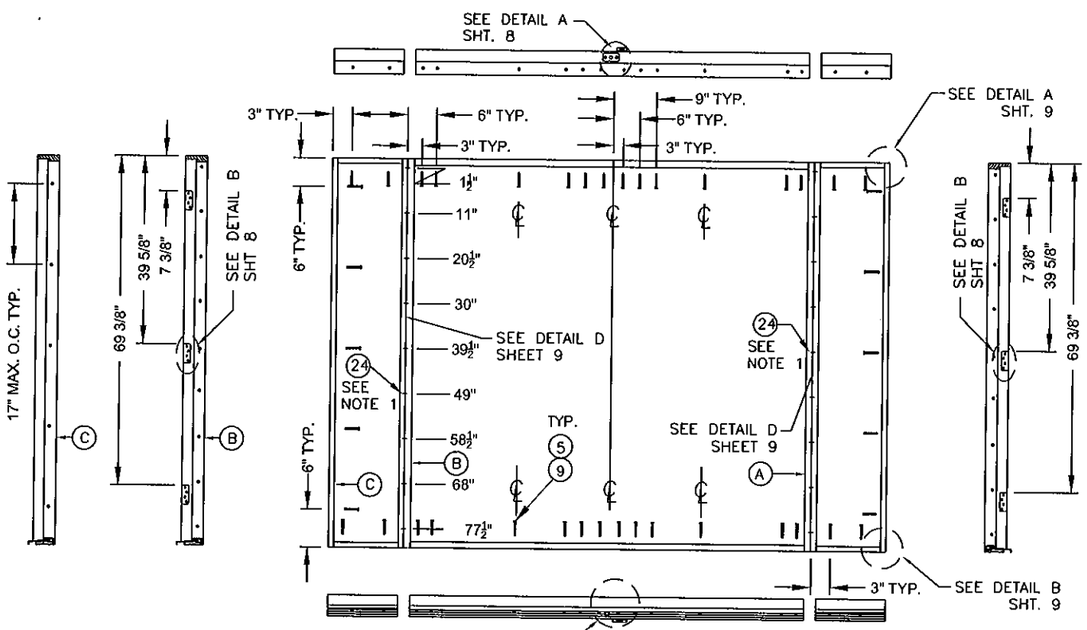

ANCHORING LOCATIONS DOUBLE INSWING UNIT W/ 2 SIDELITE (OXXO)

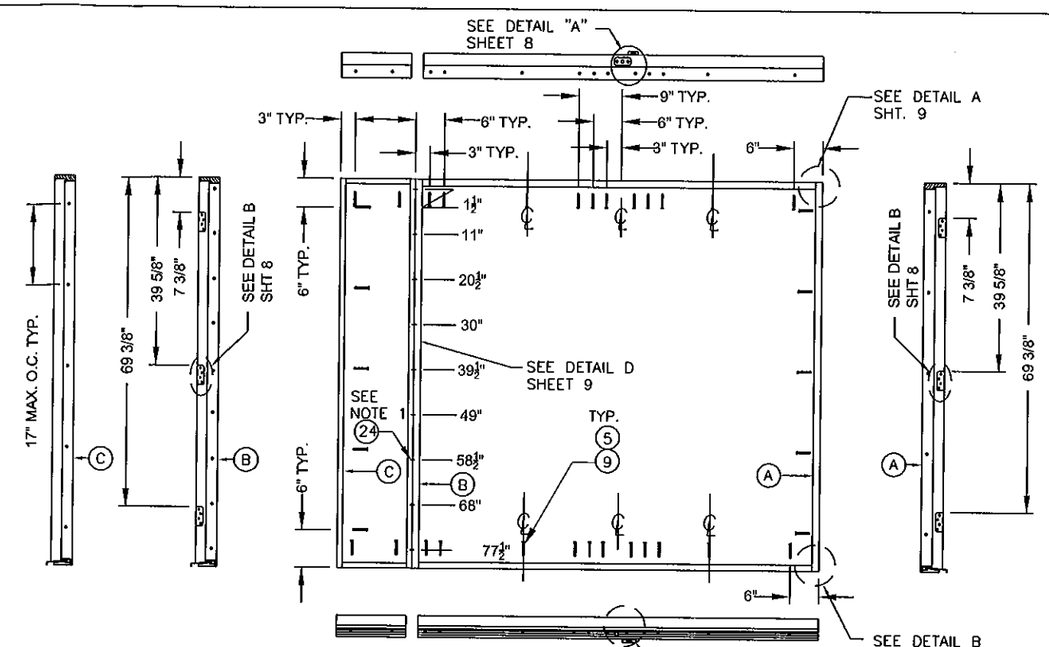

ANCHORING LOCATIONS DOUBLE OUTSWING UNIT W/ 1 SIDELITE (OXX)

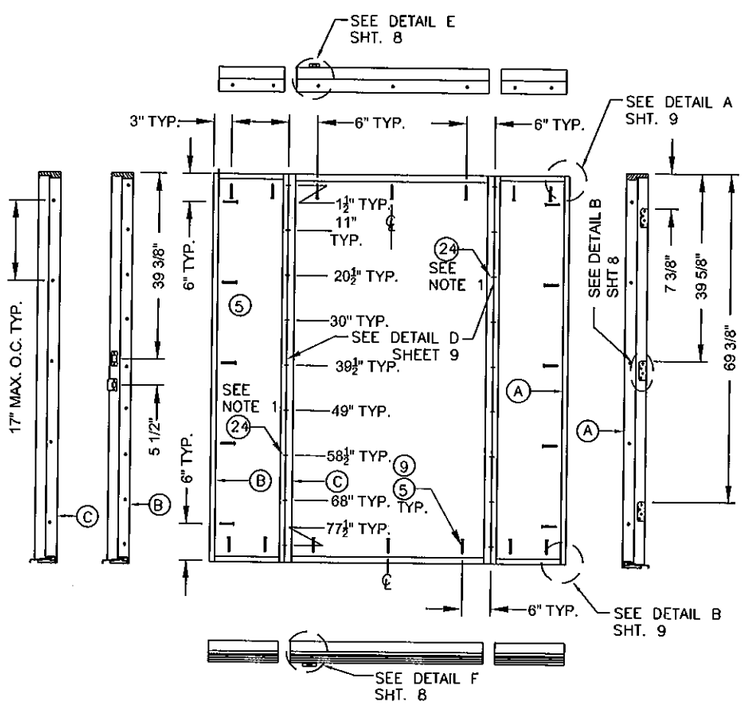

ANCHORING LOCATIONS SINGLE INSWING UNIT W/ 2 SIDELITE (OXO)

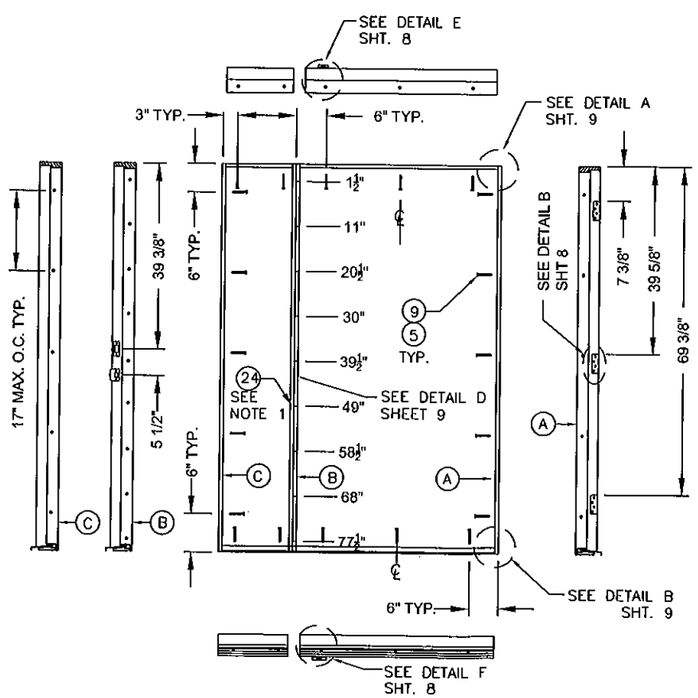

ANCHORING LOCATIONS SINGLE INSWING UNIT W/ 1 SIDELITE (OX) OR (XO)

NOTES:

1. CORRUGATED FASTENERS TO BE APPLIED ON BOTH INTERIOR AND EXTERIOR SURFACES AT SPACING SHOWN, +/-1", FOR TOTAL OF NINE FASTENERS PER SIDE.
2. CORRUGATED FASTENERS ARE UTILIZED ON DOUBLE BACK JAMBS ONLY. OMIT ON SOLID MULL POST CONFIGURATIONS.
3. SEE SHT 9 FOR SIDELITE FASTENER LOCATIONS.
4. SEE SHT 9 FOR SIDELITE BRAD NAIL LOCATIONS FOR QUARTER ROUND MOLDING ATTACHMENT.
5. OPTIONALLY, ANCHORS (ITEMS #5 OR #9) CAN BE PLACED IN NARROW SECTION OF JAMB OR HEAD AS LONG AS MINIMUM EMBEDMENT IS MET.
6. ALL VIEWS FROM INTERIOR.

Approved as complying with the Florida Building Code
Date 11/11/2010
NOA# 09-0415.07
Miami Dade Product Control Division
By

18-14-10
Kristina S. Daugherty
CertWorks LLC.
Florida P.E. No. 68455
127 W. Fairbanks Ave, Ste 438
Winter Park, FL 32789
FBPE Cert. of Authorization #28520

JELD-WEN, INC.
3737 LAKEPORT BLVD.
KLAMATH FALLS, OR, 97601
PH. 541-882-3451

PRODUCT: GLADIATOR/FINISHIELD GLAZED WOOD EDGE 12-0x6-8 INSWING STEEL DOOR

PART OR ASSEMBLY: TYPICAL ELEVATIONS

NO.	DATE	REVISIONS	BY
C	2/17/2010	P.E. CHANGES	GL
B	2/9/09	P.E. CHANGES	WBD
A	1/21/09	P.E. CHANGES	WBD

DATE: 6/25/08
SCALE: 3/8"=1'-0"
DWG. BY: WBD
CHK. BY: S. FREY
DRAWING NO.: JW192008
SHEET 11 OF 14

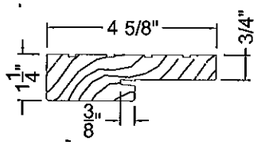

1 WOOD JAMB
2 FINGERJOINTED PINE
SCALE: 3" =1'-0"
3
4

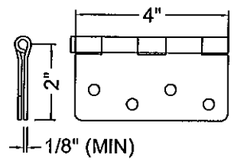

6 BUTT HINGE
4x4x12 GA. STEEL
SCALE: 3" =1'-0"

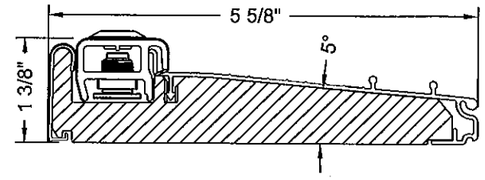

11 ENDURA INSWING THRESHOLD
6063 T6 AL AND COMPOSITE PVC
SCALE: 6" =1'-0"
REFERENCE: IMR-200908522

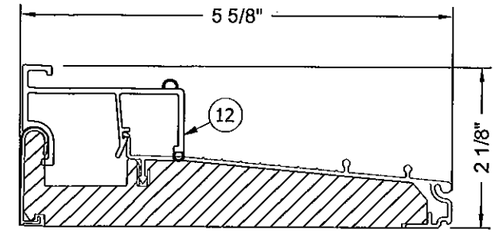

11 12 ENDURA SIDELITE THRESHOLD
WITH PVC SIDELITE SEAT
6063 T6 AL AND COMPOSITE PVC
SCALE: 6" =1'-0"
REFERENCE: IMR-200908522

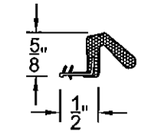

10 COMPRESSION
WEATHERSTRIP
LOXSEAL 650
VINYL
SCALE: 6" =1'-0"

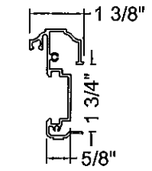

13 ASTRAGAL (GLOBAL)
6063-T6 ALUMINUM
SCALE: 3" =1'-0"

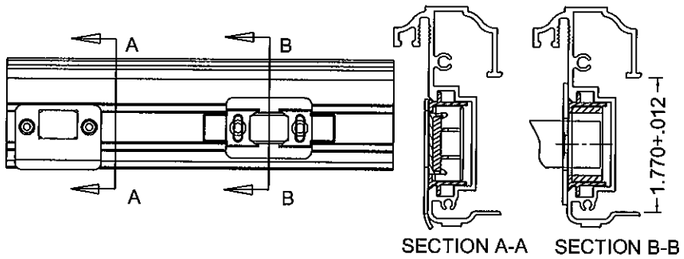

15 WATA STRIKE & DEADBOLT
6063 T6 ALUMINUM
SCALE: 3" =1'-0"

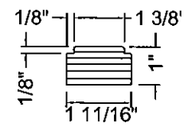

16 STILES AND RAILS
TOP RAIL
18 HINGE STILE
LAMINATED VENEER
LUMBER (LVL)
SCALE: 3" =1'-0"

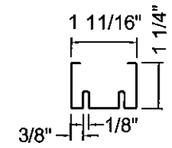

17 BOTTOM RAIL
25 GA. STEEL
SCALE: 3" =1'-0"

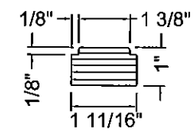

19 LATCH SIDE STILE
LAMINATED VENEER LUMBER (LVL)
SCALE: 3" =1'-0"

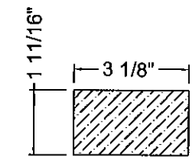

20 LOCK BLOCK
FINGERJOINTED PINE
SCALE: 3" =1'-0"

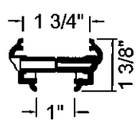

21 ODL LIP-LITE FRAME
PLASTIC
SCALE: 3" =1'-0"
NOA 07-0214.08

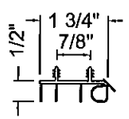

32 DOOR BOTTOM SWEEP
VINYL
SCALE: 3" =1'-0"

NOTE:
1.2" CUT
LENGTH

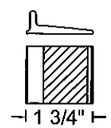

33 CORNER PADS
PLASTIC
SCALE: 3" =1'-0"

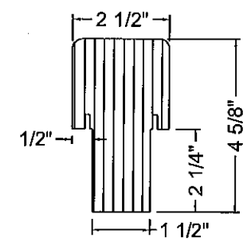

35 MULL POST
LAMINATED VENEER LUMBER (LVL)
SCALE: 3" =1'-0"
SPECIE - SOUTHERN PINE
GRADE - SELECT STRUCTURAL
MIN. G = 0.55

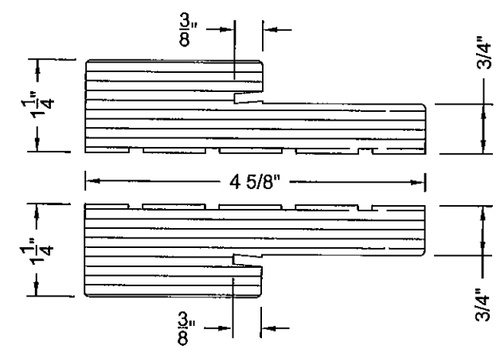

40 LVL DOUBLE BACK JAMB
LAMINATED VENEER LUMBER (LVL)
SCALE: 6" =1'-0"
SOUTHERN PINE
GRADE - SELECT STRUCTURAL
MIN. G = 0.55

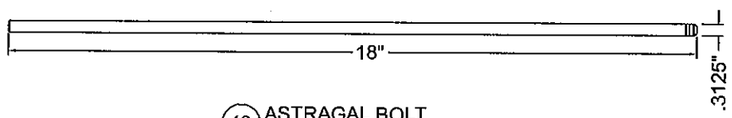

43 ASTRAGAL BOLT
MATERIAL: COLD ROLLED STEEL
ZINC & YELLOW CHROMATE
SCALE: 3" =1'-0"

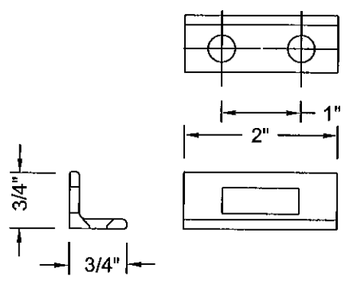

45 IVES SURFACE BOLT STRIKE PLATE
STEEL
SCALE: 6" =1'-0"

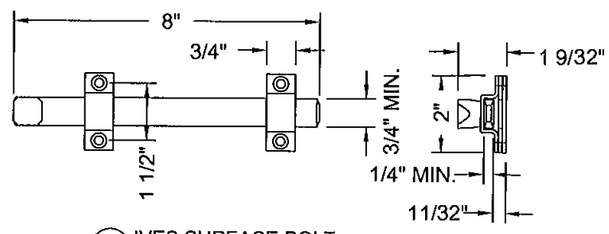

42 IVES SURFACE BOLT
STEEL
SCALE: 3" =1'-0"

Approved as complying with the
Florida Building Code
Date 11/11/2010
NOA# 09-0415.07
Miami Dade Product Control
Division
By

10-14-10
Kristina S. Daugherty
CertWorks LLC.
Florida P.E. No. 68455
127 W. Fairbanks Ave, Ste 438
Winter Park, FL 32789
FBPE Cert. of Authorization #28520

JELD-WEN, INC.
3737 LAKEPORT BLVD.
KLAMATH FALLS, OR, 97601
PH. 541-882-3451

PRODUCT: GLADIATOR/FINISHIELD GLAZED WOOD EDGE 12-0x6-8 INSWING STEEL DOOR

PART OR ASSEMBLY: UNIT COMPONENTS

NO.	DATE	REVISIONS	BY
C	2/17/2010	P.E. CHANGES	GL
B	2/9/09	P.E. CHANGES	WBD
A	1/21/09	P.E. CHANGES	WBD

DATE: 6/25/08
SCALE: AS NOTED
DWG. BY: WBD
CHK. BY: S. FREY
DRAWING NO.: JW192008
SHEET 12 OF 14

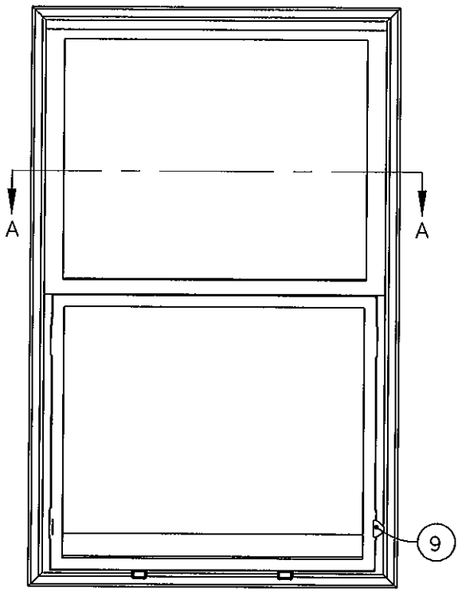

OUTSIDE FRAME VIEW

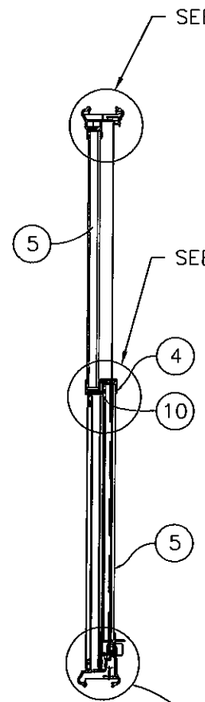

SECTION B–B
VENTED HALF LITE

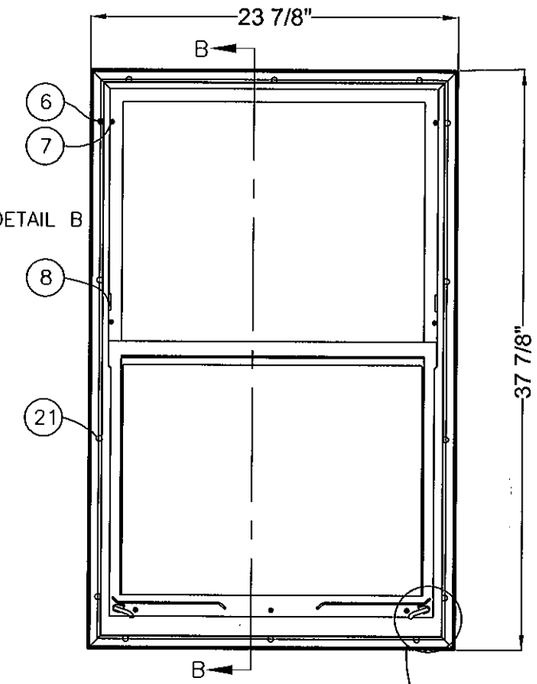

INSIDE FRAME VIEW

SECTION A–A
VENTED HALF LITE

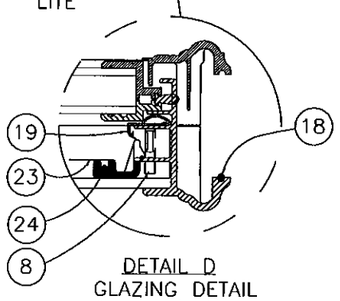

DETAIL D
GLAZING DETAIL
AT JAMB RAIL

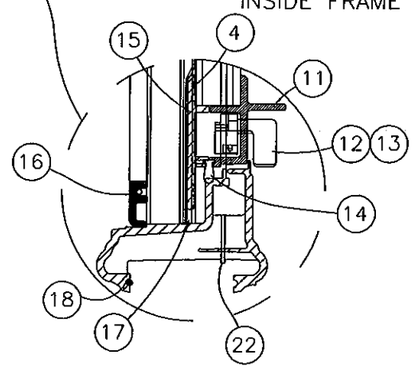

DETAIL C
GLAZING DETAIL
AT SILL RAIL

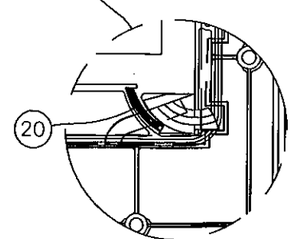

INSIDE VIEW

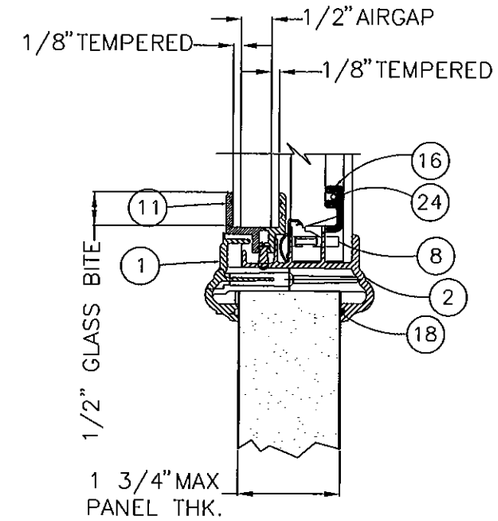

A/13 VERTICLE CROSS SECTION
VENTED HALF LITE

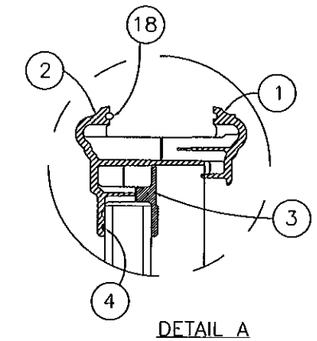

DETAIL A
GLAZING DETAIL
AT HEAD RAIL

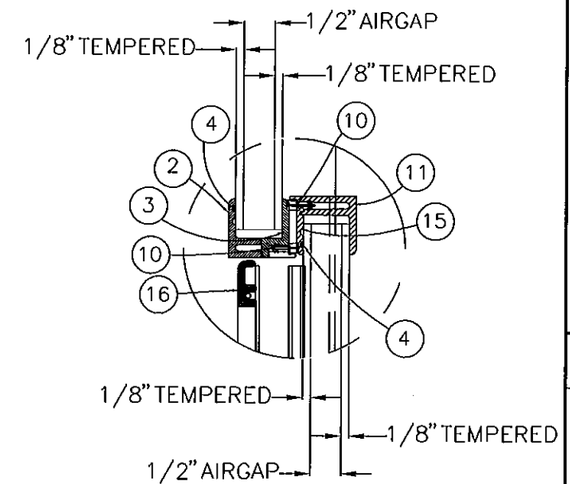

DETAIL B
GLAZING DETAIL
AT MEETING RAIL

NOTES:
1. SEE SHEET 14 FOR ITEM DESCRIPTIONS
2. PLEASE REFERENCE NOA 07-0801.05 FOR PLASTIC APPROVAL.

Approved as complying with the Florida Building Code
Date 11/11/2010
NOA# 09-0415.07
Miami Dade Product Control Division
By

10-14-10
Kristina S. Daugherty
CertWorks LLC.
Florida P.E. No. 68455
127 W. Fairbanks Ave, Ste 438
Winter Park, FL 32789
FBPE Cert. of Authorization #28520

JELD-WEN, INC.
3737 LAKEPORT BLVD.
KLAMATH FALLS, OR, 97601
PH. 541-882-3451

PRODUCT: GLADIATOR/FINISHIELD GLAZED WOOD EDGE 12-0x6-8 INSWING STEEL DOOR

PART OR ASSEMBLY: ODL MODEL 799 VENT LITE

NO.	DATE	REVISIONS	BY
C	2/17/2010	P.E. CHANGES	GL
B	2/9/09	P.E. CHANGES	WBD
A	1/21/09	P.E. CHANGES	WBD

DATE: 6/25/08
SCALE: AS NOTED
DWG. BY: WBD
CHK. BY: S. FREY
DRAWING NO.: JW192008
SHEET 13 OF 14

MATERIAL LIST (VENTED HALF LITE ONLY)				
ITEM	PART NO.	DESCRIPTION	QYT	MATERIAL
1	16797-000	INNER FRAME	1	SPARTECH POLYCOM PP53330, REF NOA 07-0801.05
2	16796-000	OUTER FRAME	1	SPARTECH POLYCOM PP53330, REF NOA 07-0801.05
3	16798-000	FIXED UPPER SASH	1	SPARTECH POLYCOM PP53330, REF NOA 07-0801.05
4	14589-000	HOT MELT CAULK (8 LOCATIONS)	AR	100% SOLIDS BUTYL ELASTOMER
5	16825-000	GLASS, 3/4" x 20 19/32" x 16 11/16"	2	3/4" INSULATED GLASS ASSEMBLY
6	16828-000	#8 x 2" PAN HEAD SCREW	14	ZINC PLATED STEEL
7	12207-000	#6 x 3/4" PAN HEAD SCREW	7	ZINC PLATED STEEL
8	16809-000	SAFTEY LOCK	2	NYLON 6/6
9	16829-000	#4 x 1/4" FLAT HEAD SCREW	6	ZINC PLATED STEEL
10	17041-000	FIN SEAL, ROLL	4'	FROM SCHLEGEL CORP.: FIBER PILE DUST SEAL
11	16799-000	LOWER INNER SASH	1	SPARTECH POLYCOM PP53330, REF NOA 07-0801.05
12	16806-000	RIGHT LATCH	1	NYLON 6
13	16807-000	LEFT LATCH	1	NYLON 6
14	16837-000	Q-LON SEAL (3 SIDE LOWER SASH)	5'	FROM SCHLEGEL CORP.: Q-LON2 WEATHER SEAL
15	16800-000	LOWER OUTER SASH	1	SPARTECH POLYCOM PP53330, REF NOA 07-0801.05
16	16801-000	SCREEN FRAME	1	SPARTECH POLYCOM PP53330, REF NOA 07-0801.05
17	16831-000	WEATHER STRIPING, OUTER SASH	2'	FROM SCHLEGEL CORP.: POLYFLEX WEATHERSTRIPPING
18		DOW 1199	AR	SILICONE SEALANT
19	16830-000	WEATHER STRIPING (2 SIDE LOWER SASH)	3.3'	FROM SCHLEGEL CORP.: POLYFLEX WEATHERSTRIPPING
20	16838-000	ø.12 O.D. SPRING	2	STAINLESS 302 AND 304
21	14234-000	SCREW HOLE PLUGS	14	SPARTECH POLYCOM PP53330, REF NOA 07-0801.05
22	16841-000	1/16" SINGLE SIDED FOAM TAPE	8.3'	POLYOLEFIN FOAM, ACRYLIC ADHESIVE
23	16968-000	SCREEN CLOTH 21" x 24"	1	FIBERGLASS
24	10046-000	SPLINE	6.1'	PVC

Approved as complying with the Florida Building Code
Date 11/11/2010
NOA# 09-0415.07
Miami-Dade Product Control Division
By

10-14-10
Kristina S. Daugherty
CertWorks LLC.
Florida P.E. No. 68455
127 W. Fairbanks Ave, Ste 438
Winter Park, FL 32789
FBPE Cert. of Authorization #28520

JELD-WEN, INC.
3737 LAKEPORT BLVD.
KLAMATH FALLS, OR, 97601
PH. 541-882-3451

PRODUCT: GLADIATOR/FINISHIELD GLAZED WOOD EDGE 12-0x6-8 INSWING STEEL DOOR

PART OR ASSEMBLY: ODL MODEL 799 VENT LITE BILL OF MATERIALS

NO.	DATE	REVISIONS	BY
C	2/17/2010	P.E. CHANGES	GL
B	2/9/09	P.E. CHANGES	WBD
A	1/21/09	P.E. CHANGES	WBD

DATE: 6/25/08
SCALE: AS NOTED
DWG. BY: WBD
CHK. BY: S. FREY
DRAWING NO.: JW192008
SHEET 14 OF 14