MIAMI-DADE COUNTY
BUILDING CODE COMPLIANCE OFFICE (BCCO)
PRODUCT CONTROL DIVISION

MIAMI-DADE COUNTY, FLORIDA
METRO-DADE FLAGLER BUILDING
140 WEST FLAGLER STREET, SUITE 1603
MIAMI, FLORIDA 33130-1563
(305) 375-2901 FAX (305) 372-6339
www.miamidade.gov/buildingcode

NOTICE OF ACCEPTANCE (NOA)

Luxbau, LLC
2400 Centrepark West Dr.
Suite # 150
West Palm Beach, FL 33409

SCOPE:

This NOA is being issued under the applicable rules and regulations governing the use of construction materials. The documentation submitted has been reviewed by Miami-Dade County Product Control Division and accepted by the Board of Rules and Appeals (BORA) to be used in Miami Dade County and other areas where allowed by the Authority Having Jurisdiction (AHJ).

This NOA shall not be valid after the expiration date stated below. The Miami-Dade County Product Control Division (In Miami Dade County) and/or the AHJ (in areas other than Miami Dade County) reserve the right to have this product or material tested for quality assurance purposes. If this product or material fails to perform in the accepted manner, the manufacturer will incur the expense of such testing and the AHJ may immediately revoke, modify, or suspend the use of such product or material within their jurisdiction. BORA reserves the right to revoke this acceptance, if it is determined by Miami-Dade County Product Control Division that this product or material fails to meet the requirements of the applicable building code. This product is approved as described herein, and has been designed to comply with the Florida Building Code, including the High Velocity Hurricane Zone.

DESCRIPTION: Series "Lüxbaum Windows & Doors" Wood Fixed Window – L.M.I.

APPROVAL DOCUMENT: Drawing No. **1188**, titled "Luxbaum Windows & Doors Wooden Fixed Window System", sheets 1 through 4 of 4, dated 11/18/02 with revision C1 dated 04/20/09, prepared by W.W. Schaefer Engineering & Consulting, signed and sealed by Warren W. Schaefer, P.E., bearing the Miami-Dade County Product Control Revision stamp with the Notice of Acceptance number and expiration date by the Miami-Dade County Product Control Division.

MISSILE IMPACT RATING: Large and Small Missile Impact Resistant

LABELING: Each unit shall bear a permanent label with the manufacturer's name or logo, city, state and following statement: "Miami-Dade County Product Control Approved", unless otherwise noted herein.

RENEWAL of this NOA shall be considered after a renewal application has been filed and there has been no change in the applicable building code negatively affecting the performance of this product.

TERMINATION of this NOA will occur after the expiration date or if there has been a revision or change in the materials, use, and/or manufacture of the product or process. Misuse of this NOA as an endorsement of any product, for sales, advertising or any other purposes shall automatically terminate this NOA. Failure to comply with any section of this NOA shall be cause for termination and removal of NOA.

ADVERTISEMENT: The NOA number preceded by the words Miami-Dade County, Florida, and followed by the expiration date may be displayed in advertising literature. If any portion of the NOA is displayed, then it shall be done in its entirety.

INSPECTION: A copy of this entire NOA shall be provided to the user by the manufacturer or its distributors and shall be available for inspection at the job site at the request of the Building Official.

This NOA **revises NOA # 08-0206.14** and consists of this page 1 and evidence pages E-1, E-2, and E-3 as well as approval document mentioned above.

The submitted documentation was reviewed by **Jaime Gascon, P.E.**

MIAMI-DADE COUNTY APPROVED

J. Gascon
6/9/09

Luxbau, LLC

NOTICE OF ACCEPTANCE: EVIDENCE SUBMITTED

A. DRAWINGS

1. Manufacturer's die drawings and sections.
2. Drawing No **1188**, Sheets 1 through 4 of 4, titled "Luxbau Windows & Doors Wooden Fixed Window System", dated 11/18/02 with revision C1 dated 04/20/09, prepared by W.W. Schaefer Engineering & Consulting, signed and sealed by Warren W. Schaefer, P.E.

B. TESTS

1. Test reports on: 1) Air Infiltration Test, per FBC, TAS 202-94
   2) Uniform Static Air Pressure Test, Loading per FBC TAS 202-94
   3) Water Resistance Test, per FBC, TAS 202-94
   4) Large Missile Impact Test per FBC, TAS 201-94
   5) Cyclic Wind Pressure Loading per FBC, TAS 203-94
   6) Forced Entry Test, per FBC 2411 3.2.1, TAS 202-94

   Along with marked-up drawings and installation diagram of wooden slim European door system, prepared by Hurricane Test Laboratory, Test Report No. **HTL-0271-0406-05**, dated 05/25/05 signed and sealed by Vinu J. Abraham, P.E.
2. Test reports on: 1) Air Infiltration Test, per FBC, TAS 202-94
   2) Uniform Static Air Pressure Test, Loading per FBC, TAS 202-94
   3) Water Resistance Test, per FBC, TAS 202-94
   4) Large Missile Impact Test per FBC, TAS 201-94
   5) Cyclic Wind Pressure Loading per FBC, TAS 203-94

   Along with marked-up drawings and installation diagram of a fixed wood window, prepared by Hurricane Test Laboratory, Inc., Test Report No. **HTL-0271-0519-05** dated 05/25/2005, signed and sealed by Vinu J. Abraham, P.E.
   (Submitted under NOA# 08-0206.14)
3. Test reports on: 1) Air Infiltration Test, per FBC, TAS 202-94
   2) Uniform Static Air Pressure Test, Loading per FBC, TAS 202-94
   3) Water Resistance Test, per FBC, TAS 202-94
   4) Large Missile Impact Test per FBC, TAS 201-94
   5) Cyclic Wind Pressure Loading per FBC, TAS 203-94

   Along with marked-up drawings and installation diagram of a fixed wood window, prepared by Hurricane Test Laboratory, Inc., Test Report No. **HTL 0271-0119-03** dated 03/17/2003, signed and sealed by Vinu J. Abraham, P.E.
   (Submitted under NOA# 08-0206.14)

Jaime Gascon, P.E.
Product Control Examiner
NOA No. 09-0422.09
Expiration Date: May 29, 2013
Approval Date: July 1, 2009

NOTICE OF ACCEPTANCE: EVIDENCE SUBMITTED

B. TESTS (Continued)

4. Test reports on: 1) Air Infiltration Test, per FBC, TAS 202-94
2) Uniform Static Air Pressure Test, Loading per FBC, TAS 202-94
3) Water Resistance Test, per FBC, TAS 202-94
4) Large Missile Impact Test per FBC, TAS 201-94
5) Cyclic Wind Pressure Loading per FBC, TAS 203-94
Along with marked-up drawings and installation diagram of a fixed wood window, prepared by Hurricane Test Laboratory, Inc., Test Report No. **HTL 0271-0717.02** dated 07/24/2002, signed and sealed by Vinu J. Abraham, P.E.
(Submitted under NOA# 08-0206.14)

5. Test reports on: 1) Large Missile Impact Test per FBC, TAS 201-94
2) Cyclic Wind Pressure Loading per FBC, TAS 203-94
Along with marked-up drawings and installation diagram of a fixed wood window, prepared by Hurricane Test Laboratory, Inc., Test Report No. **HTL 0271-1010-02** dated 10/16/2002, signed and sealed by Vinu J. Abraham, P.E.
(Submitted under NOA# 08-0206.14)

C. CALCULATIONS

1. Anchor verification calculations and structural analysis, complying with FBC-2007, prepared by W.W. Schaefer Engineering & Consulting, P.A., dated 01/07/2002 with the latest revision, dated 02/25/2008, signed and sealed by Warren Schaefer, P.E.
Complies with ASTM E1300-04

D. QUALITY ASSURANCE

1. Miami Dade Building Code Compliance Office (BCCO).

E. MATERIAL CERTIFICATIONS

1. Notice of Acceptance No. **09-0312.03** issued to E.I. DuPont DeNemours & Co., Inc. for their "**DuPont Sentry Glass® Interlayer**" dated 05/13/09, expiring on 01/14/1

2. Notice of Acceptance No. **07-1116.11** issued to Saf–Glas, LLC for their "**SAF–GLAS Polycarbonate Laminate**", dated 12/27/07, expiring on 12/16/12.

E. STATEMENTS

1. Statement letter of conformance, dated February 26, 2008, signed and sealed by Warren W. Schaefer, P.E.

2. Addendum letter for Test Report no. **HTL- 0271-0406-05**, issued by Hurricane Test Laboratory, Inc., dated December 6, 2006, signed by Vinu J. Abraham, P.E.

Jaime Gascon, P.E.
Product Control Examiner
NOA No. 09-0422.09
Expiration Date: May 29, 2013
Approval Date: July 1, 2009

NOTICE OF ACCEPTANCE: EVIDENCE SUBMITTED

E. STATEMENTS (Continued)

3. Laboratory compliance letter for Test Report N°. **HTL-0271-0519-05**, issued by Hurricane Test Laboratory, Inc., dated 07/21/2005 signed and sealed by Vinu J. Abraham, P.E.
4. Laboratory compliance letter for Test Report N°.'s **HTL 0271-0717.02, HTL 0271-0119-03 and HTL 0271-1010-02**, issued by Hurricane Test Laboratory, Inc., dated 02/20/2003, signed and sealed by Vinu J. Abraham, P.E.

G. OTHERS

1. Notice of Acceptance No. **08-0206.14**, issued to Luxbau, LLC. for their **Series "Lüxbaum Windows & Doors" Wood Fixed Window – L.M.I.**, approved on 04/24/08 and expiring on 05/29/13.

Jaime Gascon, P.E.
Product Control Examiner
NOA No. 09-0422.09
Expiration Date: May 29, 2013
Approval Date: July 1, 2009

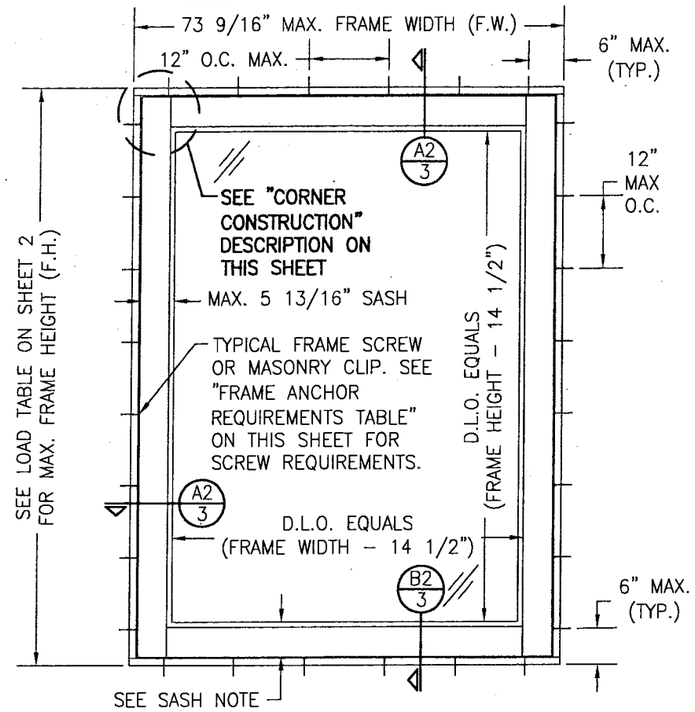

EXTERIOR ELEVATION
SINGLE WINDOW WITH 5 13/16" SASH
SCALE: 1/2"=1'-0"

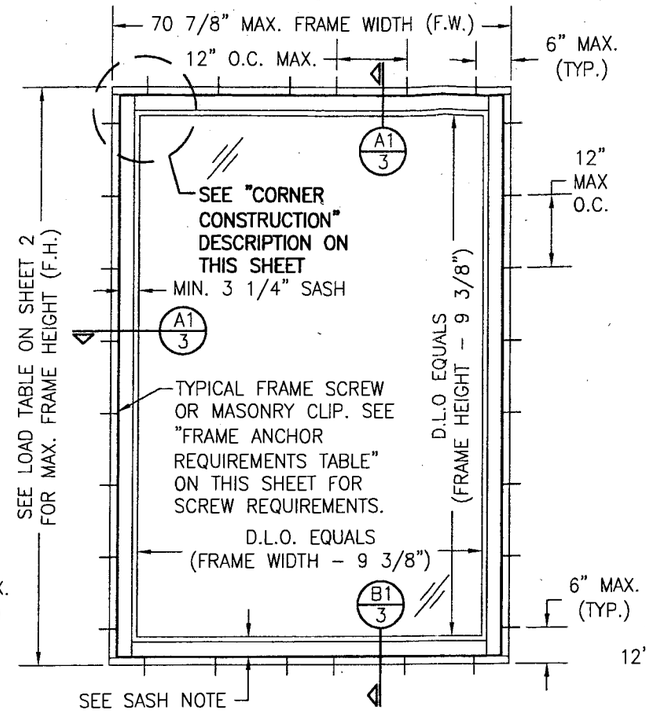

EXTERIOR ELEVATION
SINGLE WINDOW WITH 3 1/4" SASH
SCALE: 1/2"=1'-0"

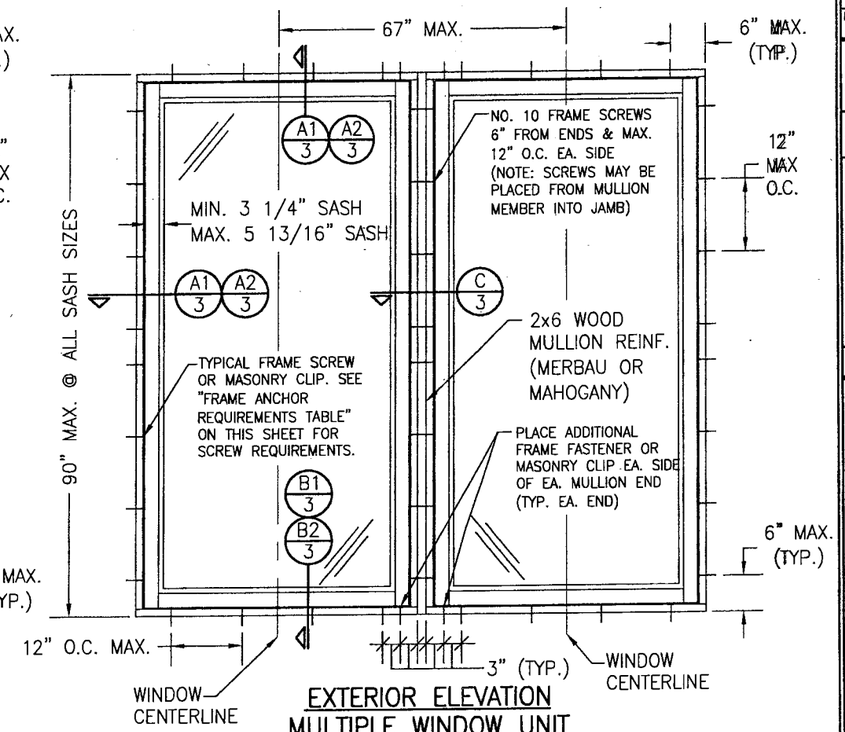

EXTERIOR ELEVATION
MULTIPLE WINDOW UNIT
(MAX. FOUR UNITS MAY BE COMBINED)
SEE OTHER ELEVATIONS FOR WINDOW DETAILS
SCALE: 1/2"=1'-0"

CORNER CONSTRUCTION

JAMB CORNERS: VERTICAL JAMB ENDS ARE COPED AND BUTTED TO HORIZONTAL JAMBS WITH JOINT FULLY GLUED WITH WOOD GLUE AND DOWELED WITH (3) 1/2" DIA. x 3 5/16" LONG MERBAU WOOD DOWELS.

SASH CORNERS: HORIZONTAL SASH ENDS ARE COPED AND BUTTED TO VERTICAL SASH PROFILES WITH JOINT FULLY GLUED WITH WOOD GLUE AND DOWELED WITH (2) 1/2" DIA. x 3 7/16" AND (1) 5/8" DIA. x 3 1/4" MERBAU WOOD DOWELS.

GENERAL NOTES:

1. THESE WINDOW SYSTEMS HAVE BEEN TESTED, ANALYZED & APPROVED FOR DESIGN PRESSURES NOT TO EXCEED THOSE SHOWN IN THE "ALLOWABLE DESIGN PRESSURE TABLE(S).
2. OPENINGS, BUCKING & BUCKING FASTENERS MUST BE PROPERLY DESIGNED & INSTALLED TO TRANSFER WIND LOADS TO THE STRUCTURE.
3. ALL HARDWARE & FASTENERS SHALL BE IN ACCORDANCE WITH THESE DRAWINGS & SHALL NOT VARY UNLESS SPECIFICALLY MENTIONED ON THE DRAWINGS. SPECIFIED ANCHOR EMBED TO BASE MATERIAL SHALL BE BEYOND WALL FINISH OR STUCCO.
4. THE DETAILS & SPECIFICATIONS SHOWN HEREIN REPRESENT THE PRODUCTS TESTED & PROPOSED FOR WATER, AIR, IMPACT, CYCLIC & UNIFORM STATIC AIR PRESSURE TESTING IN CONFORMANCE WITH THE FLORIDA BUILDING CODE PROTOCALS TAS-201, 202 & 203 FOR LARGE MISSILE IMPACT WINDOWS.
5. THESE WINDOW SYSTEMS HAVE BEEN DESIGNED IN ACCORDANCE WITH AND MEET THE REQUIREMENTS OF THE FLORIDA BUILDING CODE (FBC) INCLUDING HIGH VELOCITY HURRICANE ZONES (HVHZ).
6. IMPACT SHUTTERS ARE NOT REQUIRED WITH THESE WINDOWS.
7. ALL ANCHORS SECURING WINDOW FRAME TO PRESSURE TREATED BUCKS OR WOOD FRAMING SHALL BE CAPABLE OF RESISTING CORROSION CAUSED BY THE PRESSURE TREATING CHEMICALS IN THE WOOD.
8. DETERMINE THE POSITIVE & NEGATIVE DESIGN LOADS TO USE WHEN REFERENCING THESE DOCUMENTS IN ACCORDANCE WITH THE GOVERNING CODE AND GOVERNING WIND VELOCITY. FOR WIND LOAD CALCULATIONS IN ACCORDANCE WITH THE FLORIDA BUILDING CODE, A DIRECTIONALITY FACTOR OF Kd = 0.85 MAY BE APPLIED WHEN USED IN CONJUNCTION WITH LOAD COMBINATIONS SPECIFIED IN SECTION 2.0 OF THE ASCE 7 STANDARD.
9. NO INCREASE IN ALLOWABLE STRESS HAS BEEN USED IN THE CERTIFICATION OF THIS PRODUCT. WIND LOAD DURATION FACTOR Cd = 1.6 WAS USED FOR WOOD SCREW ANALYSIS ONLY.
10. MATERIALS, INCLUDING BUT NOT LIMITED TO STEEL SCREWS, THAT COME INTO CONTACT WITH OTHER DISSIMILAR MATERIALS SHALL MEET THE REQUIREMENTS OF FLORIDA BUILDING CODE CHAPTER 20.
11. All WOOD MEMBERS OF WINDOWS THAT MAY POSSIBLY COME INTO CONTACT WITH MASONRY OR CONCRETE SUBSTRATES, ARE SUBJECT TO MOISTURE &/OR ARE SUBJECT TO THE OUTSIDE ENVIRONMENT SHALL BE OF AN APPROVED DURABLE SPECIES OR BE TREATED IN AN APPROVED METHOD WITH AN APPROVED PRESERVATIVE PER FBC SECTION 2326.

RECTANGULAR WINDOWS SHOWN. ANCHORING OF SHAPED WINDOWS IS THE SAME WITH REQUIRED ANCHOR SPACING ALONG THE FRAME RADIUS CIRCUMFERENCE BEING THE SAME AS SPECIFIED FOR A STRAIGHT FRAME.

LONG DIMENSION OF WINDOW MAY BE HORIZONTAL OR VERTICAL (HEIGHT & WIDTH MAY BE INTERCHANGED).

APPROVED SHAPES

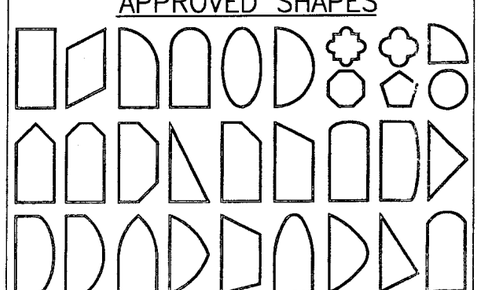

NOTES:
1. OTHER SHAPES MAY APPLY PROVIDING THEY ARE SIMILAR TO THOSE SHOWN & HAVE CORNER CONSTRUCTION AS DESCRIBED ON THIS SHEET.
2. ALL SHAPED UNITS MUST FIT INSCRIBED INTO THE ALLOWABLE RECTANGULAR UNITS & BE GOVERNED BY THE ALLOWABLE PRESSURE OF THE RESPECTIVE RECTANGULAR UNIT.

ALLOWABLE DESIGN LOADS

SEE DESIGN LOAD TABLE ON SHEET 2

MULTIPLE UNIT NOTES:

1. ALL WINDOWS ARE RESTRICTED BY THE DIMENSIONS SPECIFIED.
2. THE MAXIMUM ALLOWABLE PRESSURE FOR A COMBINED UNIT IS RESTRICTED BY THE LESSER OF THE INDIVIDUAL WINDOW ALLOWABLE PRESSURE (SEE LOAD TABLE ON SHEET 2) OR THE ALLOWABLE MULLION PRESSURE OF +65/-70 PSF
3. STACKING MAY BE HORIZONTAL OR VERTICAL.

SASH NOTE:
WHEN WINDOW IS USED AS A DOOR SIDE LIGHT, THE SASH HEIGHT MAY BE INCREASED TO EQUAL THE DOOR PANEL BOTTOM RAIL HEIGHT.

* FRAME ANCHOR REQUIREMENTS TABLE

OPENING TYPE (SUBSTRATE)	JAMB TO OPENING FASTENER TYPE	MINIMUM EMBEDMENT	MINIMUM EDGE DIST.
2X_ WOOD FRAME OR BUCK	NO. 12 SMS SCREW	1 1/4"	1"
CMU/CONCRETE	(1) 1/4" CONCRETE SCREWS	1 1/4"	2 1/2"

(1) CONCRETE SCREWS SHALL BE ELCO OR ITW RAMSET/RED HEAD TAPCONS, HILTI KWIK-CON II OR POWERS RAWL TAPPER (HARDENED STEEL OR S.S.).

*ANCHOR NOTE: FRAME MAY BE EITHER DIRECT MOUNTED TO THE OPENING, MOUNTED ONTO A CONTINUOUS WOOD SPACER, OR ANCHORED TO A MIN. 2x4 NO. 3 SOUTHERN PINE WOOD BUCK. WHEN ANCHORED TO A 2x4 BUCK, NO. 12 SCREWS SHALL BE USED. WHEN DIRECT MOUNTED OR MOUNTED WITH SPACER, 1/4" CONCRETE SCREW SHALL BE USED. SEE "ANCHOR REQUIREMENTS TABLE" FOR EMBED REQUIREMENTS.

PRODUCT REVISED
Complying with the Florida Building Code
Acceptance No 09-0422.09
Expiration Date MAR 29, 2013
By
Miami Dade Product Control Division

DRAWN BY: K.P.S.	CHECKED BY: W.W.S.
PLOT: 1=24	DATE: 11/18/02

NO.	REVISION DESCRIPTION	BY	DATE
A1	ADDED DOUBLE SASH	WWS	6/14/05
	WINDOW CONDITION		
A2	REVISED TO 2004 F.B.C.	WWS	6/14/05
B1	UPDATE TO 2007 CODE COMPLIANCE	W.R.M.	02/26/08
C1	ADDED I.G. GLASS	W.R.M.	04/20/09

DRAWING TITLE: LUXBAUM WINDOWS & DOORS WOODEN FIXED WINDOW SYSTEM

MANUFACTURER: LUXBAU, LLC
2400 CENTERPARK WEST DRIVE, SUITE 150
WEST PALM BEACH, FL 33409
561-684-1500

CONSULTANTS: W. W. SCHAEFER ENGINEERING & CONSULTING, P.A.
8895 N. MILITARY TRAIL; SUITE C-204
PALM BEACH GARDENS, FL 33410
PHONE: 561-775-4902 FAX: 561-775-4903

CERTIFICATION
APR 19 2009
WARREN W. SCHAEFER, P.E.
P.E. NO. 44135

DRAWING NO. 1188 REV. C
SHEET NO. 1 OF 4

ALLOWABLE WINDOW SIZE & DESIGN PRESSURE TABLE
(SINGLE WINDOWS)

D.L.O.		FRAME SIZE				ALLOWABLE PRESSURE		
MAX.	MAX.	3 1/4" SASH		5 3/4" SASH		GLASS OPTION 1 OR 3 9/16" LAMINATED ANNEALED (+/−PSF)	GLASS OPTION 2 9/16" LAMINATED HEAT STRENGTHENED (+/−PSF)	GLASS OPTION 4 1 1/8" I.G. GLASS (PSF)
HEIGHT (IN.)	WIDTH (IN.)	HEIGHT (IN.)	WIDTH (IN.)	HEIGHT (IN.)	WIDTH (IN.)			
71	59	80.0	68.0	85.0	73.0	75.0	75.0	+65/−70
83	47	92.0	56.0	97.0	61.0	75.0	75.0	+65/−70
	53		62.0		67.0	74.6	75.0	+65/−70
	59		68.0		73.0	69.3	75.0	+65/−70
95	41	104.0	50.0	109.0	55.0	75.0	75.0	+65/−70
	47		56.0		61.0	73.2	75.0	+65/−70
	53		62.0		67.0	66.1	75.0	+65/−70
	59		68.0		73.0	60.8	75.0	+65/−70
107	41	116.0	50.0	121.0	55.0	75.0	75.0	+65/−70
	47		56.0		61.0	65.0	75.0	+65/−70
119	35	128.0	44.0	133.0	49.0	75.0	75.0	+65/−70
	41		50.0		55.0	71.4	75.0	+65/−70
	47		56.0		61.0	59.8	75.0	+65/−70

NOTES:
1. ACTUAL FRAME SIZES = (D.L.O. + 9.5") AT 3.25" SASH UNITS & (D.L.O. + 14.25") AT 5.75" SASH UNITS.
2. ALL PRESSURES IN TABLE ARE FOR POSITIVE & NEGATIVE DIRECTIONS.
3. HEIGHT & WIDTH MAY BE INTERCHANGED SUCH THAT LONG DIMENSION IS HORIZONTAL OR VERTICAL.
4. ALL SIZES IN THIS TABLE ARE +/− 1/2".

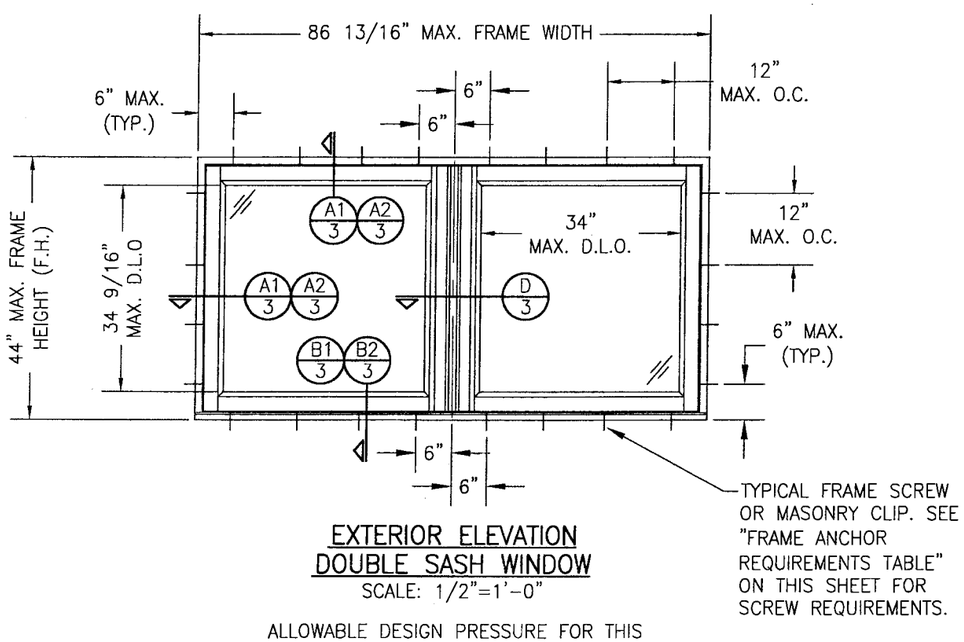

EXTERIOR ELEVATION
DOUBLE SASH WINDOW
SCALE: 1/2"=1'-0"

ALLOWABLE DESIGN PRESSURE FOR THIS WINDOW = +/−75 PSI

PRODUCT REVISED
as complying with the Florida Building Code
Acceptance No 09-0422.09
Expiration Date MAY 29, 2013
By
Miami Dade Product Control Division

DRAWN BY: K.P.S.	CHECKED BY: W.W.S.
PLOT: 1=24	DATE: 11/18/02

NO.	REVISION DESCRIPTION	BY	DATE

DRAWING TITLE LUXBAUM WINDOWS & DOORS WOODEN FIXED WINDOW SYSTEM

MANUFACTURER
LUXBAU, LLC
2400 CENTERPARK WEST DRIVE, SUITE 150
WEST PALM BEACH, FL 33409
561-684-1500

CONSULTANTS
W. W. SCHAEFER ENGINEERING & CONSULTING, P.A.
8895 N. MILITARY TRAIL; SUITE C-204
PALM BEACH GARDENS, FL 33410
PHONE: 561-775-4902 FAX: 561-775-4903

CERTIFICATION
APR 19 2009
WARREN W. SCHAEFER, P.E.
P.E. NO. 44135

DRAWING NO. 1188
REV. C
SHEET NO. 2 OF 4

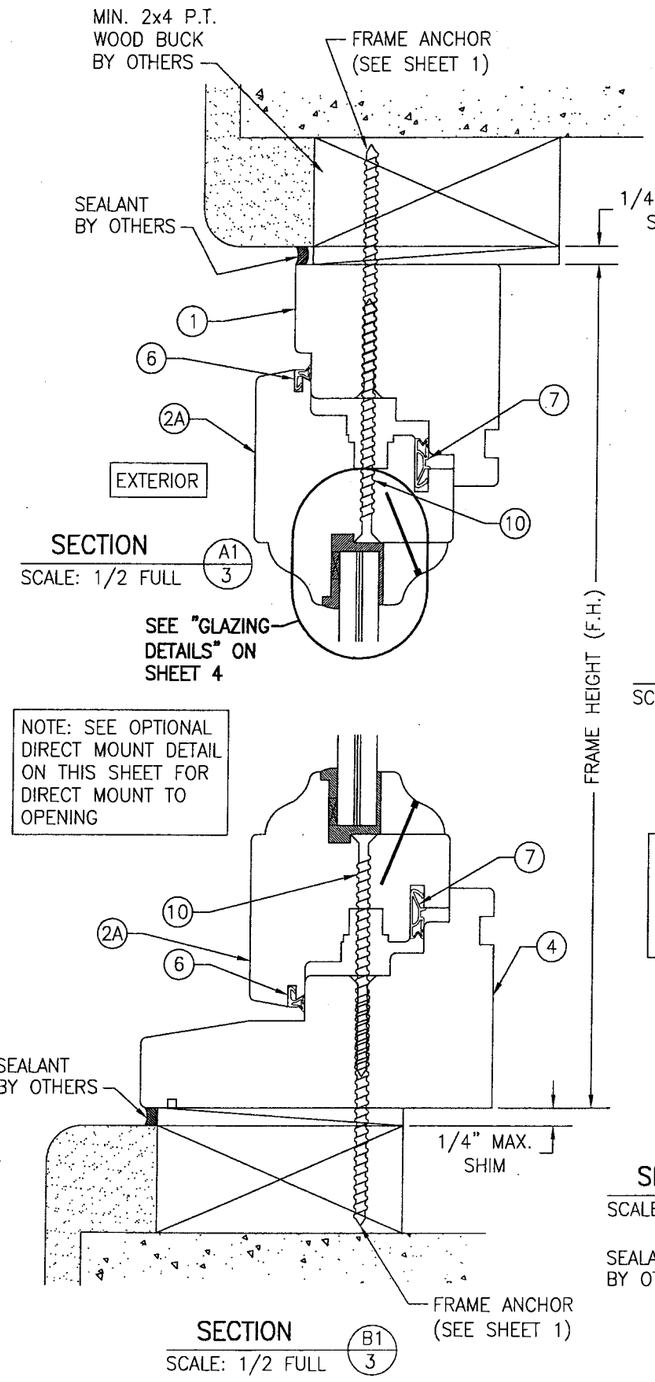

SECTION A1/3
SCALE: 1/2 FULL

SECTION B1/3
SCALE: 1/2 FULL

NOTE: BRICK MOLDS MAY BE PLACED WITH WINDOW & ARE OPTIONAL (NOT SHOWN)

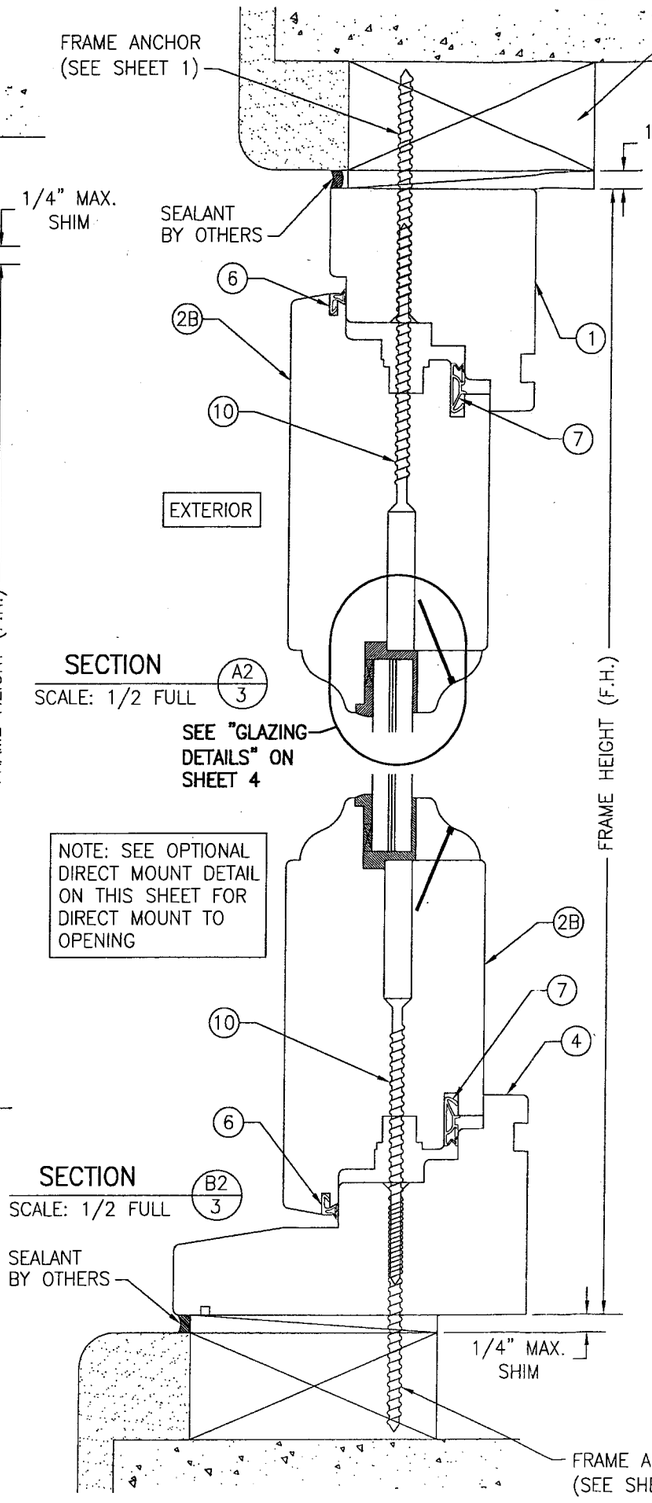

SECTION A2/3
SCALE: 1/2 FULL

SECTION B2/3
SCALE: 1/2 FULL

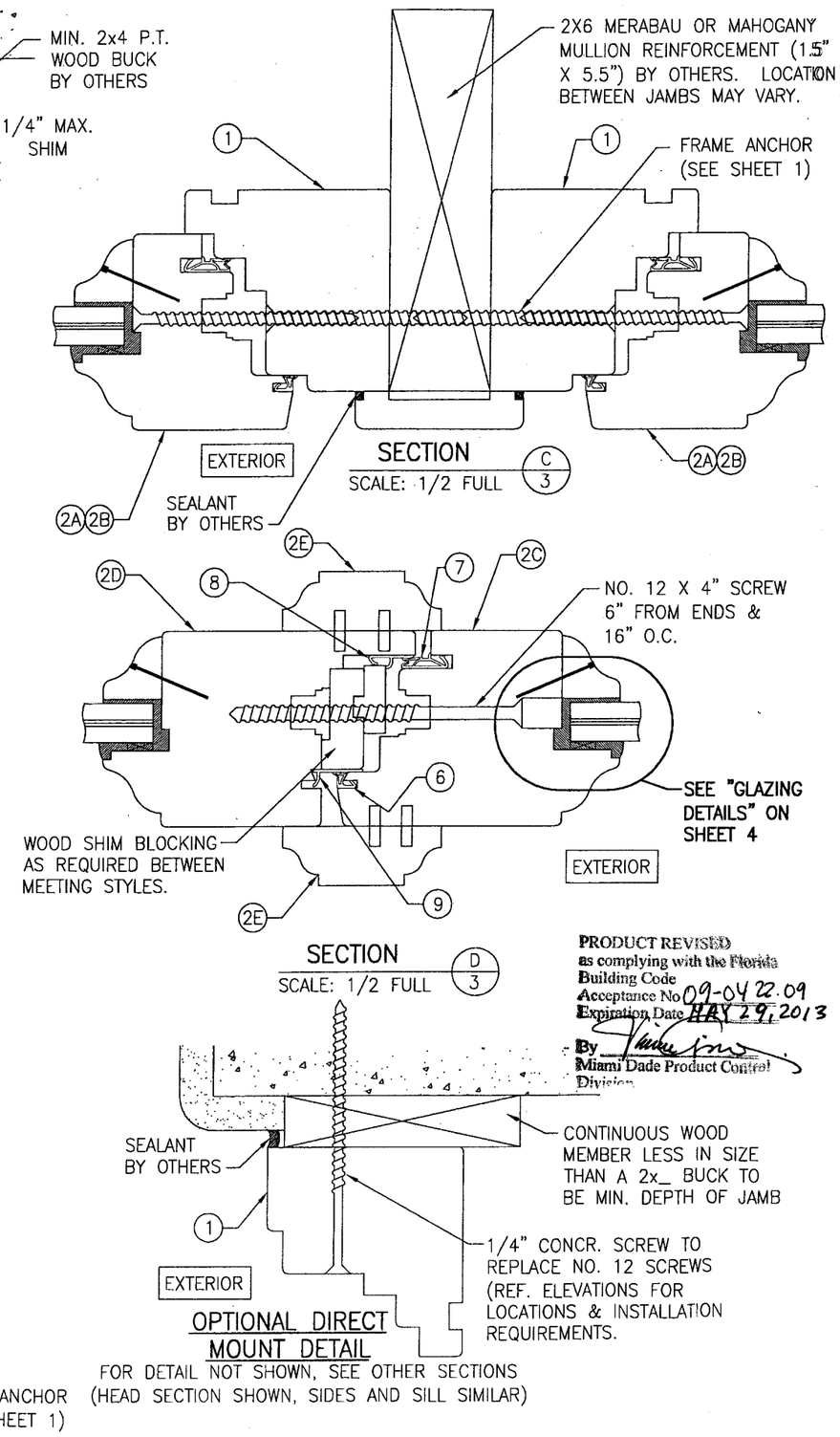

SECTION C/3
SCALE: 1/2 FULL

SECTION D/3
SCALE: 1/2 FULL

OPTIONAL DIRECT MOUNT DETAIL

FOR DETAIL NOT SHOWN, SEE OTHER SECTIONS (HEAD SECTION SHOWN, SIDES AND SILL SIMILAR)

PRODUCT REVISED
as complying with the Florida Building Code
Acceptance No 09-0422.09
Expiration Date MAY 29, 2013
By
Miami Dade Product Control Division

DRAWN BY: K.P.S.	CHECKED BY: W.W.S.
PLOT: 1=2	DATE: 11/18/02

NO.	REVISION DESCRIPTION	BY	DATE

DRAWING TITLE: LUXBAUM WINDOWS & DOORS WOODEN FIXED WINDOW SYSTEM

MANUFACTURER: LUXBAU, LLC
2400 CENTERPARK WEST DRIVE, SUITE 150
WEST PALM BEACH, FL 33409
561-684-1500

CONSULTANTS: W. W. SCHAEFER ENGINEERING & CONSULTING, P.A.
8895 N. MILITARY TRAIL, SUITE C-204
PALM BEACH GARDENS, FL 33410
PHONE: 561-775-4902 FAX: 561-775-4903

CERTIFICATION
APR 1 8 2009
WARREN W. SCHAEFER, P.E.
P.E. NO. 44135

DRAWING NO. 1188
REV. C
SHEET NO. 3 OF 4

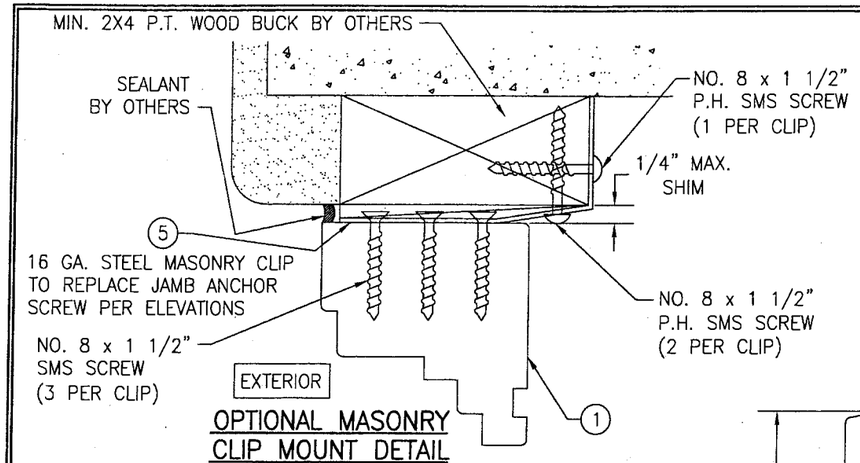

OPTIONAL MASONRY CLIP MOUNT DETAIL

FOR DETAIL NOT SHOWN, SEE OTHER SECTIONS (HEAD SECTION SHOWN, SIDES AND SILL SIMILAR)

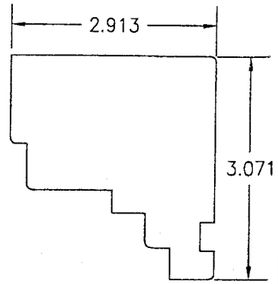

1 HEAD & SIDE JAMB

ITEM #	PART	ITEM DESCRIPTION	MANUFACTURER/NOTES
		PARTS	
1	7478	FRAME HEAD & SIDE JAMB	MIN. SELECT STRUCTURAL MERBAU OR MAHOGANY
2A	7283	SMALL SASH	MIN. SELECT STRUCTURAL MERBAU OR MAHOGANY
2B	72148	LARGE SASH	MIN. SELECT STRUCTURAL MERBAU OR MAHOGANY
2C	72106	MEETING STYLE SASH	MIN. SELECT STRUCTURAL MERBAU OR MAHOGANY
2D	72118	MEETING STYLE SASH	MIN. SELECT STRUCTURAL MERBAU OR MAHOGANY
2E	2260	ASTRIGAL CAP	MIN. SELECT STRUCTURAL MERBAU OR MAHOGANY
3A	2223	NON-I.G. GLAZING BEAD	MIN. SELECT STRUCTURAL MERBAU OR MAHOGANY
3B	1522	I.G. GLAZING BEAD	MIN. SELECT STRUCTURAL MERBAU OR MAHOGANY
4	78127	SILL JAMB	MIN. SELECT STRUCTURAL MERBAU OR MAHOGANY
5	–	1 5/8" WIDE x 0.05" THK. x MIN. 5" LONG MASONARY CLIP	ASTM A653 MIN. 33 KSI GALV. STEEL
		SEALS AND SEALANTS	
6	SV-33/ ACF-4527	COMPRESSION SEAL	DEVENTER/G-U
7	SV-12/ ACF-6950	COMPRESSION SEAL	DEVENTER/G-U
8	S6544	COMPRESSION SEAL	DEVENTER/G-U
9	S6544	COMPRESSION SEAL	DEVENTER/G-U
		MISCELLANEOUS FASTENERS	
10	–	#12 x 4" PFH SMS SCREW	4" FROM CORNERS & 12" O.C.
11	–	1/4" x 1 1/4" BRAD NAIL	2" FROM CORNERS & 4" O.C.

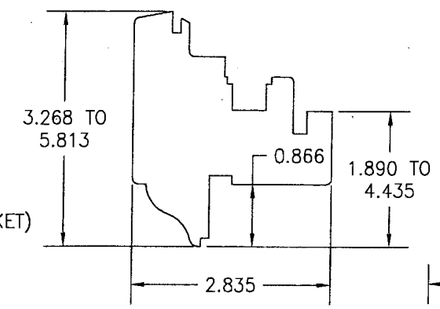

2A 2B SMALL SASH & LARGE SASH

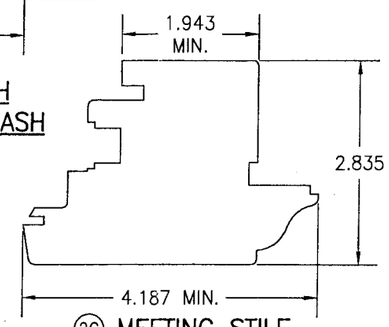

2C MEETING STILE

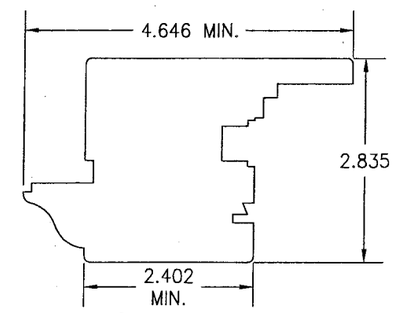

2D MEETING STILE

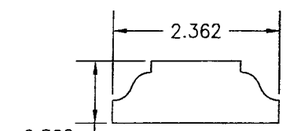

2E ASTRIGAL CAP

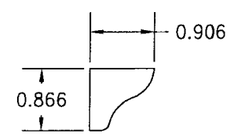

3A NON-I.G.GLAZING BEAD

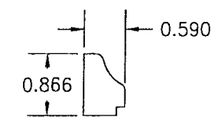

3B I.G.GLAZING BEAD

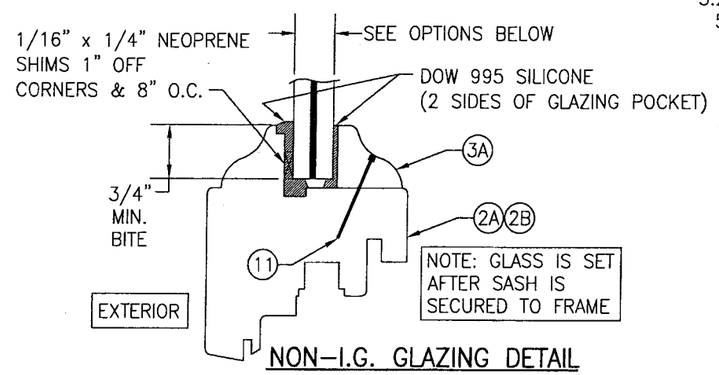

NON-I.G. GLAZING DETAIL

OPTION 1: 9/16" SECURITY IMPACT GLASS SAF-GLASS LAMINATED GLASS (1/4" A.N./0.015 ADHESIVE/0.07 POLYCARBONITE/0.015 ADHESIVE/1/4" A.N.)

OPTION 2: 9/16" SECURITY IMPACT GLASS SAF-GLASS LAMINATED GLASS (1/4" HT.ST./0.015 ADHESIVE/0.07 POLYCARBONITE/0.015 ADHESIVE/1/4" HT.ST.)

OPTION 3: 9/16" SENTRY GLASS PLUS LAMINATED GLASS (1/4" A.N./0.09 SGP/1/4" A.N.)

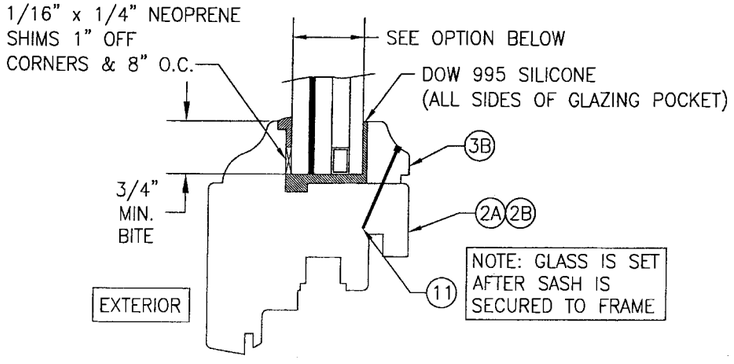

I.G. GLAZING DETAIL

OPTION 4: 1 1/8" I.G. LAMINATED GLASS (3/16" H.S./0.09 DUPONT SGP/3/16" H.S. EXTERIOR, 1/2" AIR SPACE & 3/16" TEMPERED INTERIOR)

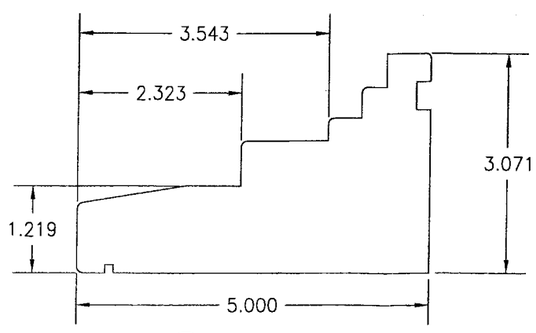

4 SILL JAMB

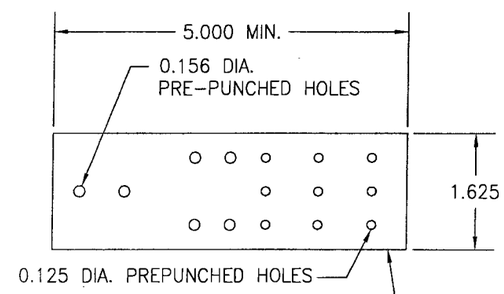

5 MASONRY CLIP

PRE-PUNCHED HOLES ARE ADDED FOR CLIPS LONGER THAN 5"

PRODUCT REVISED
as complying with the Florida Building Code
Acceptance No 09-0422.09
Expiration Date MAY 29, 2013
By
Miami Dade Product Control Division

DRAWN BY: K.P.S.	CHECKED BY: W.W.S.
PLOT: 1=2	DATE: 11/18/02

NO.	REVISION DESCRIPTION	BY	DATE

DRAWING TITLE: LUXBAUM WINDOWS & DOORS WOODEN FIXED WINDOW SYSTEM

MANUFACTURER: LUXBAU, LLC, 2400 CENTERPARK WEST DRIVE, SUITE 150, WEST PALM BEACH, FL 33409, 561-684-1500

CONSULTANTS: W. W. SCHAEFER ENGINEERING & CONSULTING, P.A., 8895 N. MILITARY TRAIL; SUITE C-204, PALM BEACH GARDENS, FL 33410, PHONE: 561-775-4902 FAX: 561-775-4903

CERTIFICATION: APR 10 2009, WARREN W. SCHAEFER, P.E. P.E. NO. 44135

DRAWING NO.	REV.
1188	C

SHEET NO. 4 OF 4