MIAMI-DADE COUNTY
BUILDING CODE COMPLIANCE OFFICE (BCCO)
PRODUCT CONTROL DIVISION

MIAMI-DADE COUNTY, FLORIDA
METRO-DADE FLAGLER BUILDING
140 WEST FLAGLER STREET, SUITE 1603
MIAMI, FLORIDA 33130-1563
(305) 375-2901 FAX (305) 372-6339
www.miamidade.gov/buildingcode

NOTICE OF ACCEPTANCE (NOA)

Sun Metal Systems, Inc.
5008 Tampa West Boulevard
Tampa, FL 33634

SCOPE:

This NOA is being issued under the applicable rules and regulations governing the use of construction materials. The documentation submitted has been reviewed by Miami-Dade County Product Control Division and accepted by the Board of Rules and Appeals (BORA) to be used in Miami Dade County and other areas where allowed by the Authority Having Jurisdiction (AHJ).

This NOA shall not be valid after the expiration date stated below. The Miami-Dade County Product Control Division (In Miami Dade County) and/or the AHJ (in areas other than Miami Dade County) reserve the right to have this product or material tested for quality assurance purposes. If this product or material fails to perform in the accepted manner, the manufacturer will incur the expense of such testing and the AHJ may immediately revoke, modify, or suspend the use of such product or material within their jurisdiction. BORA reserves the right to revoke this acceptance, if it is determined by Miami-Dade County Product Control Division that this product or material fails to meet the requirements of the applicable building code. This product is approved as described herein, and has been designed to comply with the Florida Building Code, including the High Velocity Hurricane Zone.

DESCRIPTION: Series "275" Aluminum Single Hung Window – S.M.I.

APPROVAL DOCUMENT: Drawing No. **S-2667**, titled "Series '275' Single Hung TAS 201-203 Small Missile", sheets 1 through 17 of 17, dated 04/25/06, with revision #3 dated 04/21/09, prepared by RW Building Consultants, Inc., signed and sealed by Lyndon F. Schmidt, P.E., bearing the Miami-Dade County Product Control Revision stamp with the Notice of Acceptance number and expiration date by the Miami-Dade County Product Control Division.

MISSILE IMPACT RATING: Small Missile Impact Resistant

LABELING: Each unit shall bear a permanent label with the manufacturer's name or logo, city, state and following statement: "Miami-Dade County Product Control Approved", unless otherwise noted herein.

RENEWAL of this NOA shall be considered after a renewal application has been filed and there has been no change in the applicable building code negatively affecting the performance of this product.

TERMINATION of this NOA will occur after the expiration date or if there has been a revision or change in the materials, use, and/or manufacture of the product or process. Misuse of this NOA as an endorsement of any product, for sales, advertising or any other purposes shall automatically terminate this NOA. Failure to comply with any section of this NOA shall be cause for termination and removal of NOA.

ADVERTISEMENT: The NOA number preceded by the words Miami-Dade County, Florida, and followed by the expiration date may be displayed in advertising literature. If any portion of the NOA is displayed, then it shall be done in its entirety.

INSPECTION: A copy of this entire NOA shall be provided to the user by the manufacturer or its distributors and shall be available for inspection at the job site at the request of the Building Official.

This NOA **revises and renews NOA # 06-0504.10** and consists of this page 1 and evidence pages E-1 and E-2, as well as approval document mentioned above.

The submitted documentation was reviewed by **Manuel Perez, P.E.**

MIAMI-DADE COUNTY APPROVED

NOTICE OF ACCEPTANCE: EVIDENCE SUBMITTED

A. DRAWINGS

1. Manufacturer's die drawings and sections.
2. Drawing No. **S-2667**, titled "Series '275' Single Hung TAS 201-203 Small Missile", sheets 1 through 17 of 17, dated 04/25/06, with revision #3 dated 04/21/09, prepared by RW Building Consultants, Inc., signed and sealed by Lyndon F. Schmidt, P.E.

B. TESTS

1. Test reports on: 1) Air Infiltration Test, per FBC, TAS 202-94
   2) Uniform Static Air Pressure Test, Loading per FBC, TAS 202-94
   3) Water Resistance Test, per FBC, TAS 202-94
   4) Small Missile Impact Test per FBC, PA 201-94
   5) Cyclic Wind Pressure Loading per FBC, PA 203-94
   6) Forced Entry Test, per FBC 2411.3.2.1 and TAS 202-94

   along with marked-up drawings and installation diagram of single hung window, prepared by Hurricane Test Laboratory, Inc., and Test Report No. **HTL-0280-0220-06**, dated 02/21-24/06, signed and sealed by Vinu J. Abraham, P.E. ***"Submitted under NOA# 06-0504.10"***
2. Test reports on: 1) Air Infiltration Test, per FBC, TAS 202-94
   2) Uniform Static Air Pressure Test, Loading per FBC, TAS 202-94
   3) Water Resistance Test, per FBC, TAS 202-94
   4) Forced Entry Test, per FBC 2411.3.2.1 and TAS 202-94

   along with marked-up drawings and installation diagram of single hung window, prepared by Hurricane Test Laboratory, Inc., and Test Report No. **HTL-0280-0918-03**, (Specimen 2), dated 09/26/03, signed and sealed by Vinu J. Abraham, P.E. ***"Submitted under NOA# 04-0706.02"***
3. Test reports on: 1) Small Missile Impact Test per FBC, PA 201-94
   2) Cyclic Wind Pressure Loading per FBC, PA 203-94

   along with marked-up drawings and installation diagram of single hung window, prepared by Hurricane Test Laboratory, Inc., and Test Report No. **HTL-0280-0918-03**, (Specimen 5), dated 10/23-29/03, signed and sealed by Vinu J. Abraham, P.E. ***"Submitted under NOA# 04-0706.02"***

C. CALCULATIONS

1. Anchor verification calculations and structural analysis, complying with FBC-2007, prepared by RW Building Consultants, Inc., dated 08/25/09, signed and sealed by Lyndon F. Schmidt, P.E.
   Complies with ASTM E1300-04

Manuel Perez, P.E.
Product Control Examiner
NOA No. 09-0428.04
Expiration Date: September 02, 2014
Approval Date: September 23, 2009

NOTICE OF ACCEPTANCE: EVIDENCE SUBMITTED

D. QUALITY ASSURANCE

1. Miami Dade Building Code Compliance Office (BCCO).

E. MATERIAL CERTIFICATIONS

1. Notice of Acceptance No. **06-0216.06** issued to Solutia Inc. for their "**Saflex IIIG Clear or colored interlayer**" dated 05/04/06, expiring on 05/21/11.

F. STATEMENTS

1. Statement letter of conformance and no financial interest, dated August 25, 2009, signed and sealed by Lyndon F. Schmidt, P.E.
2. Laboratory compliance letter for Test Report No. **HTL-0280-0220-06**, issued by Hurricane Test Laboratory, Inc., dated April 10, 2006, signed and sealed by Vinu J. Abraham, P.E.

G. OTHERS

1. Notice of Acceptance No. **06-0504.10**, issued to Sun Metals Systems, Inc. for their Series "275" Aluminum Single Hung Window – Small Missile Impact, approved on 11/01/07 and expiring on 09/02/09.

Manuel Perez, P.E.
Product Control Examiner
NOA No. 09-0428.04
Expiration Date: September 02, 2014
Approval Date: September 23, 2009

SUN METALS
5140 W. CLIFTON STREET (813) 886-0666
TAMPA, FLORIDA 33634 (813) 881-0812 (Fax)

SERIES 275
SINGLE HUNG WINDOW

GENERAL NOTES

1. THIS PRODUCT HAS BEEN EVALUATED AND IS IN COMPLIANCE WITH THE FLORIDA BUILDING CODE 2007 EDITION (FBC) INCLUDING THE "HIGH VELOCITY HURRICANE ZONE" (HVHZ).
2. PRODUCT ANCHORS SHALL BE AS LISTED AND SPACED AS SHOWN ON DETAILS. ANCHOR EMBEDMENT TO BASE MATERIAL SHALL BE BEYOND WALL DRESSING OR STUCCO.
3. WHEN USED IN THE "HIGH VELOCITY HURRICANE ZONE" (HVHZ) THIS PRODUCT COMPLIES WITH SECTION 1626 OF THE FLORIDA BUILDING CODE (FBC) AS A SMALL MISSILE IMPACT ASSEMBLY AND DOES NOT REQUIRE AN IMPACT RESISTANT COVERING WHEN USED ABOVE 30 FEET ABOVE GRADE.
4. WHEN USED IN AREAS OUTSIDE OF THE "HVHZ" REQUIRING WIND-BORNE DEBRIS PROTECTION THIS PRODUCT COMPLIES WITH SECTION 1609.1.2 OF THE FLORIDA BUILDING CODE (FBC) AS A SMALL MISSILE IMPACT ASSEMBLY AND DOES NOT REQUIRE AN IMPACT RESISTANT COVERING WHEN USED ABOVE 30 FEET ABOVE GRADE.
5. CONDITIONS NOT COVERED BY THIS DRAWING ARE SUBJECT TO FURTHER ENGINEERING ANALYSIS.
6. WOOD BUCKS BY OTHERS, MUST BE ANCHORED PROPERLY TO TRANSFER LOADS TO STRUCTURE AND TO BE REVIEWED BY BUILDING OFFICIAL.
7. FOR DESIGN PRESSURE RATING SEE CHART THIS SHEET.
8. THIS PRODUCT MEETS THE WATER REQUIREMENTS FOR HIGH VELOCITY HURRICANE ZONES (HVHZ).
9. ALL STEEL IN CONTACT WITH ALUMINUM TO BE PAINTED OR PLATED.

TABLE OF CONTENTS

SHEET #	DESCRIPTION
1	Typical Elevations, Design Pressures & General Notes
2	Elevations with Section View Locations
3	Vertical & Horizontal Cross Sections
4	Bill of Material & Components
5	Glazing Details, Anchor Schedule, Mullion Bracket Anchoring Detail
6	120" 3-Lite Multi-Unit 5/16" Sheet Metal Screws
7	120" 3-Lite Sgl & Twin 5/16" Sheet Metal Screws
8	120" 3-Lite Multi-Unit #24g Wood Screws
9	120" 3-Lite Sgl & Twin #24g Wood Screws
10	120" 3-Lite Mult-Unit 5/16" Concrete Screws
11	120" 3-Lite Sgl & Twin 5/16" Concrete Screws
12	84" 2-Lite & 3-Lite Multi-Unit 5/16" Sheet Metal Screws
13	84" 2-Lite & 3-Lite Sgl & Twin 5/16" Sheet Metal Screws
14	84" 2-Lite & 3-Lite Multi-Unit #24g Wood Screws
15	84" 2-Lite & 3-Lite Sgl & Twin #24g Wood Screws
16	84" 2-Lite & 3-Lite Multi-Unit 5/16" Concrete Screws
17	84" 2-Lite & 3-Lite Sgl & Twin 5/16" Concrete Screws

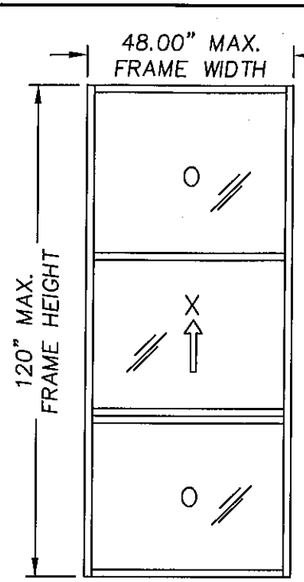

3 LITE SINGLE HUNG
DESIGN PRESSURE
+100 PSF / -100 PSF

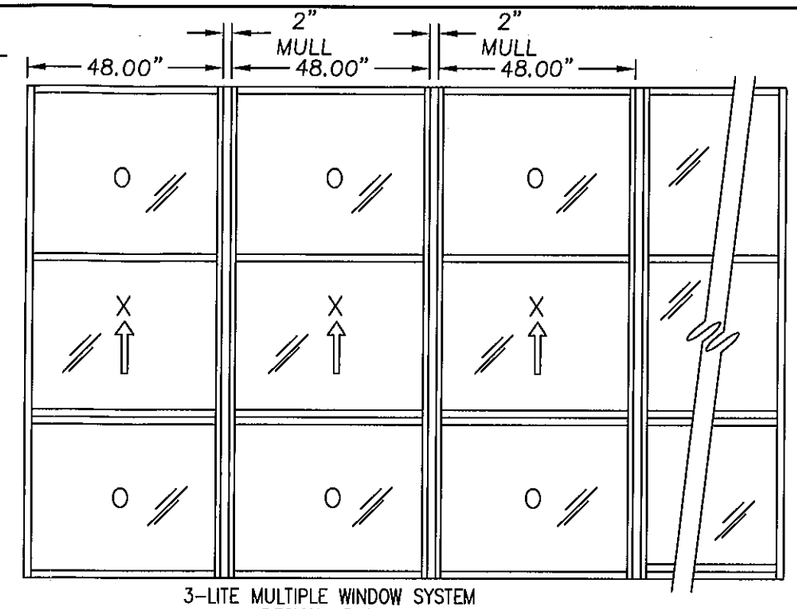

3-LITE MULTIPLE WINDOW SYSTEM
DESIGN PRESSURE
+100 PSF / -100 PSF

OVERALL D.L.O. DIMENSION 3 LITE	GLASS TYPE
(UPPER) 42.313" X 35.875" (MIDDLE) 42.313" X 35.875" (LOWER) 42.313" X 35.875"	9/16" LAMINATED 1/4" ANN. / .060" SAFLEX IIIG / 1/4" ANN.

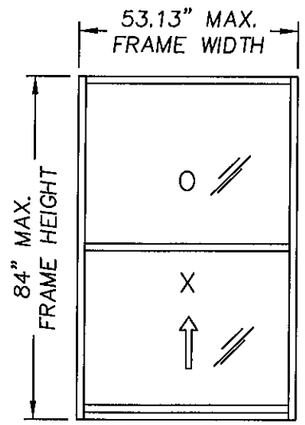

2 LITE SINGLE HUNG
DESIGN PRESSURE
+100 PSF / -120 PSF

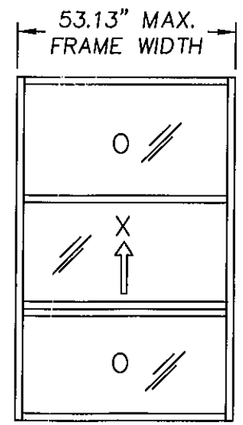

3 LITE SINGLE HUNG
DESIGN PRESSURE
+100 PSF / -120 PSF

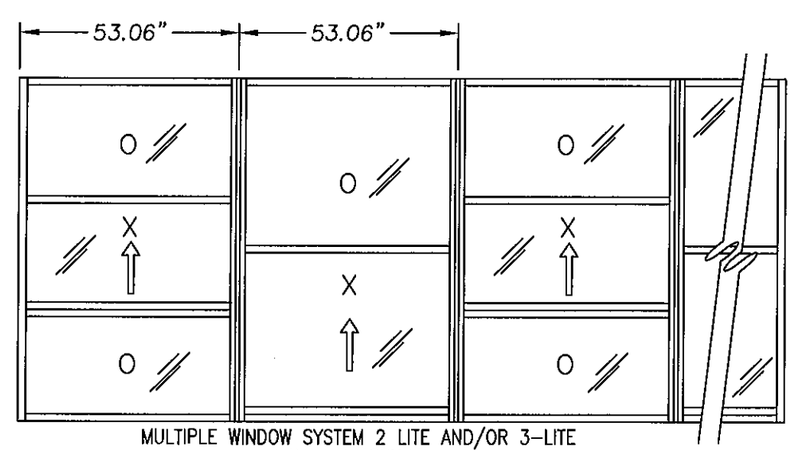

MULTIPLE WINDOW SYSTEM 2 LITE AND/OR 3-LITE
DESIGN PRESSURE
+78.23 PSF / -87.78 PSF

OVERALL D.L.O. DIMENSION 2 LITE	OVERALL D.L.O. DIMENSION 3 LITE	GLASS TYPE
(UPPER) 47.50" X 37.00" (LOWER) 47.50" X 37.00"	(UPPER) 47.50" X 23.875" (MIDDLE) 47.50" X 23.875" (LOWER) 47.50" X 23.875"	9/16" LAMINATED 1/4" H.S. / .060" SAFLEX IIIG / 1/4" H.S.
(UPPER) 47.50" X 37.00" (LOWER) 47.50" X 37.00"	(UPPER) 47.50" X 23.875" (MIDDLE) 47.50" X 23.875" (LOWER) 47.50" X 23.875"	7/16" LAMINATED 3/16" H.S. / .060" SAFLEX IIIG / 3/16" H.S.

PRODUCT REVISED
as complying with the Florida Building Code
Acceptance No. 09-0428.04
Expiration Date SEP. 7, 2014
By: Miami-Dade Product Control Division

Documents Prepared By:
R.W. BUILDING CONSULTANTS, INC.
P.O. Box 230 Valrico FL 33595
Phone No.: 813.659.9197
Florida Board of Professional Engineers
Certificate Of Authorization No. 9813
Lyndon F. Schmidt, P.E. No. 43409

PRODUCT:
SERIES '275' SINGLE HUNG
TAS 201 - 203
SMALL MISSILE

PART OR ASSEMBLY:
TYPICAL ELEVATIONS, DESIGN PRESSURES & GENERAL NOTES

REVISIONS

NO.	DATE		BY
3	4/21/09	REVISE TO 2007 FBC	AL
2	8/10/07	REVISE PER DADE REQUEST	YV
1	7/17/07	REVISE PER DADE LETTER	WH

DATE: 04/25/06
SCALE: N.T.S.
DWG. BY: EW
CHK. BY: LFS
DRAWING NO.: S-2667
SHEET 1 OF 17

© 2009 R.W. BUILDING CONSULTANTS INC.

R:\A - Projects\Project Folders\Proj 901 - 1000\#953\PE ORIGINAL\s-2667\s-2667 R3.dwg, S-2667

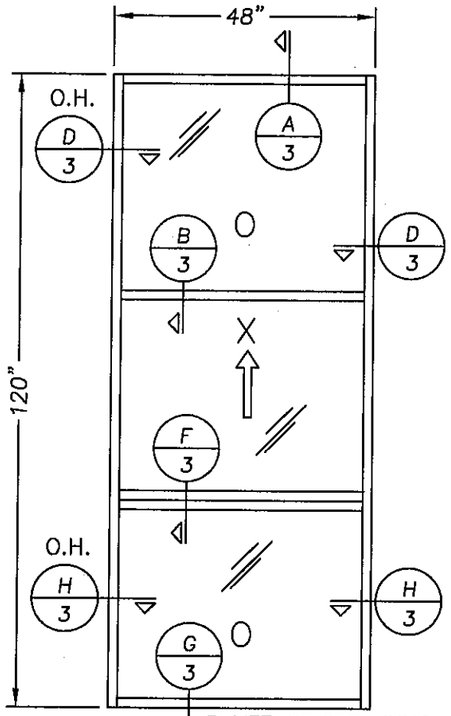

3 LITE SINGLE HUNG
DESIGN PRESSURE
+100 PSF / -100 PSF

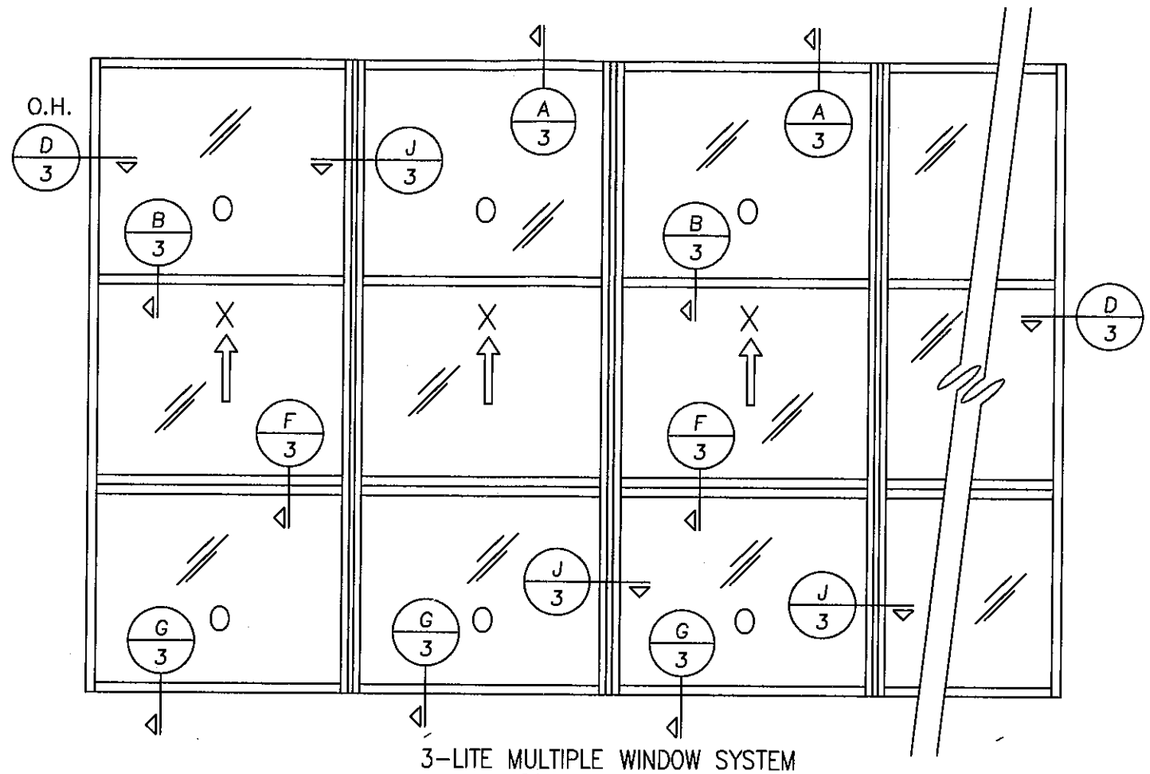

3-LITE MULTIPLE WINDOW SYSTEM
DESIGN PRESSURE
+100 PSF / -100 PSF

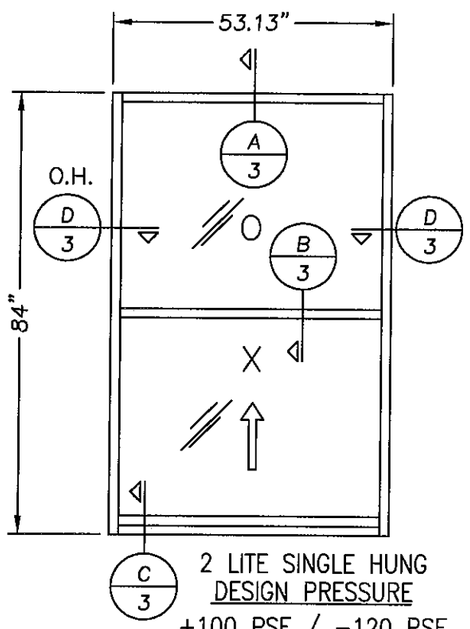

2 LITE SINGLE HUNG
DESIGN PRESSURE
+100 PSF / -120 PSF

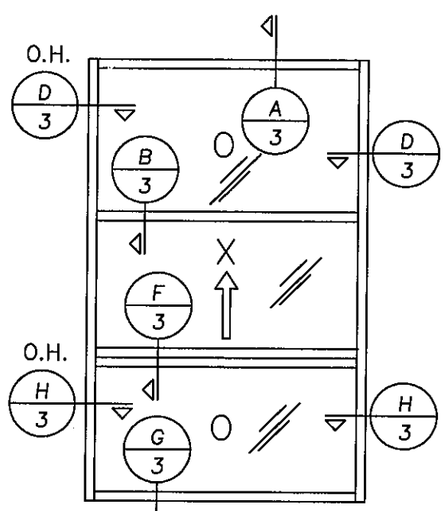

3 LITE SINGLE HUNG
DESIGN PRESSURE
+100 PSF / -120 PSF

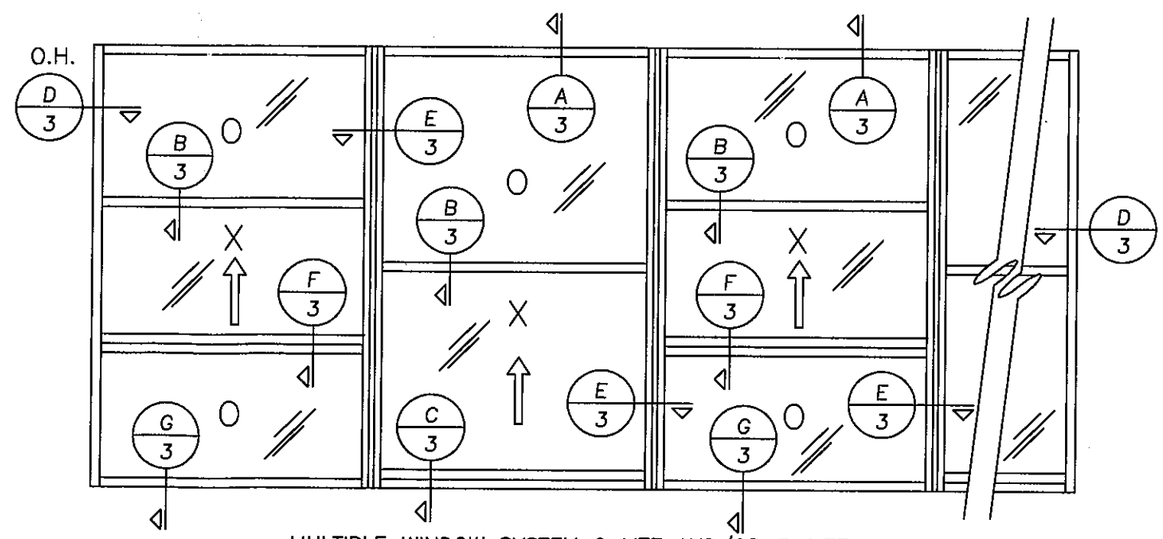

MULTIPLE WINDOW SYSTEM 2 LITE AND/OR 3-LITE
DESIGN PRESSURE
+78.23 PSF / -87.78 PSF

PRODUCT REVISED
as complying with the Florida
Building Code
Acceptance No. 09-0428.04
Expiration Date SEPT. 2, 2014
By Manuel Pérez
Miami/Dade Product Control
Division

Documents Prepared By:
RW BUILDING CONSULTANTS, INC.
P.O. Box 230 Valrico FL 33595
Phone No.: 813.659.9197
Florida Board of Professional Engineers
Certificate Of Authorization No. 9813
Lyndon F. Schmidt, P.E. No. 43409

PRODUCT:
SERIES '275' SINGLE HUNG
TAS 201 - 203
SMALL MISSILE

PART OR ASSEMBLY:
ELEVATIONS WITH
SECTION LOCATION

NO.	DATE	REVISIONS	BY
3	4/21/09	REVISE TO 2007 FBC	AL
2	8/10/07	REVISE PER DADE REQUEST	YV
1	7/17/07	REVISE PER DADE LETTER	WH

DATE: 04/25/06
SCALE: N.T.S.
DWG. BY: EW
CHK. BY: LFS
DRAWING NO.: S-2667
SHEET 2 OF 17

© 2009 R.W. BUILDING CONSULTANTS INC.

R:\A - Projects\Project Folders\Proj 901 - 1000\pf953\PF ORIGINAL\s-2667\s-2667 R3.dwg, 2

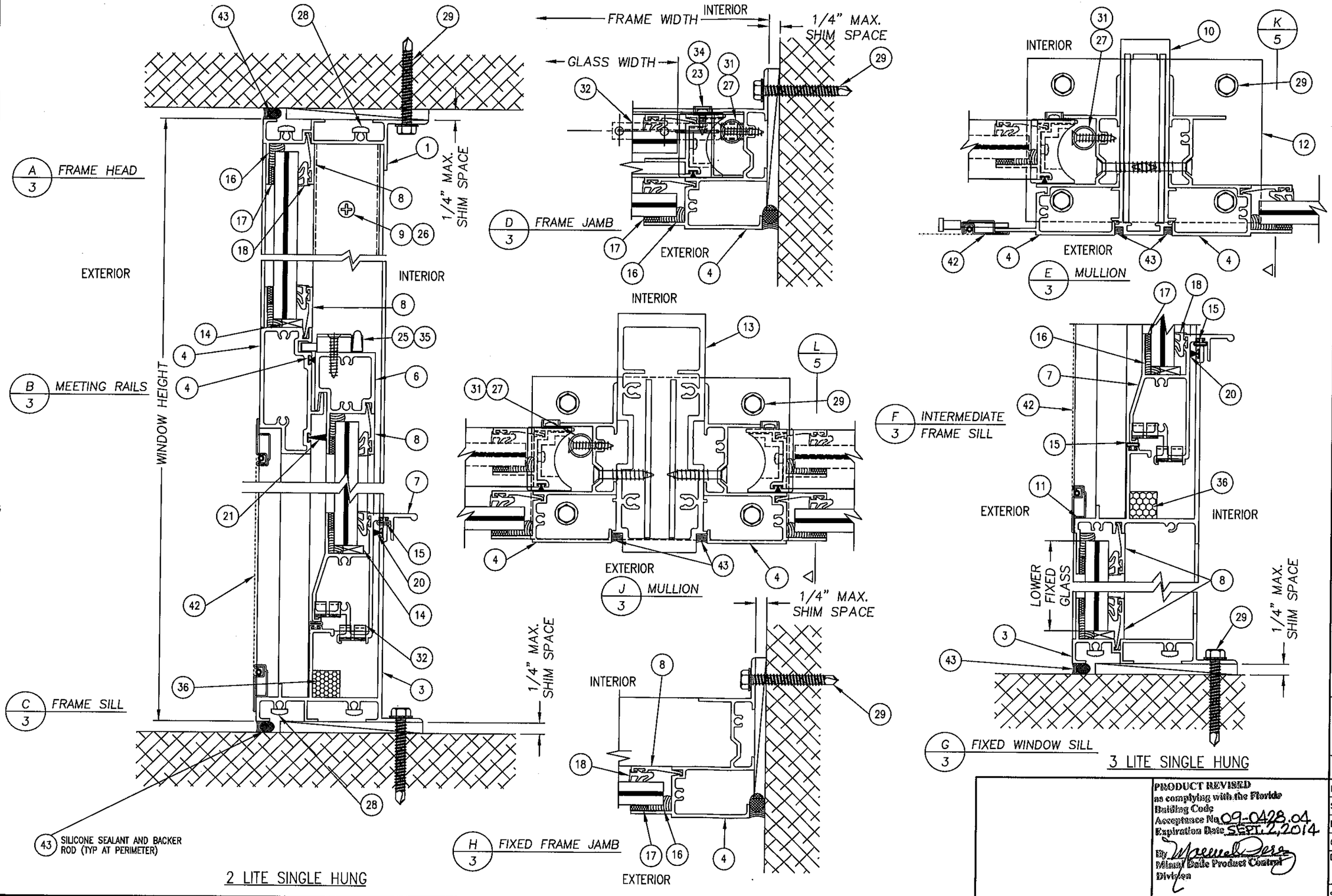

Documents Prepared By:
RW BUILDING CONSULTANTS, INC.
P.O. Box 230 Valrico FL 33595
Phone No.: 813.659.9197
Florida Board of Professional Engineers
Certificate Of Authorization No. 9813
Lyndon F. Schmidt, P.E. No. 43409

PRODUCT: SERIES '275' SINGLE HUNG TAS 201 - 203 SMALL MISSILE

PART OR ASSEMBLY: VERTICAL AND HORIZONTAL CROSS SECTIONS

NO.	DATE	REVISIONS	
3	4/21/09	REVISE TO 2007 FBC	AL
2	8/10/07	REVISE PER DADE REQUEST	YV
1	7/17/07	REVISE PER DADE LETTER	WH
			BY

PRODUCT REVISED
as complying with the Florida Building Code
Acceptance No. 09-0428.04
Expiration Date SEPT. 2, 2014
By Miami Dade Product Control Division

DATE: 04/25/06
SCALE: N.T.S.
DWG. BY: EW
CHK. BY: LFS
DRAWING NO.: S-2667
SHEET 3 OF 17

© 2009 R.W. BUILDING CONSULTANTS INC.

R:\A - Projects\Project Folders\Proj 901 - 1000\p1953\PF ORIGINAL\s-2667\s-2667 R3.dwg, 3

ALUMINUM EXTRUSIONS

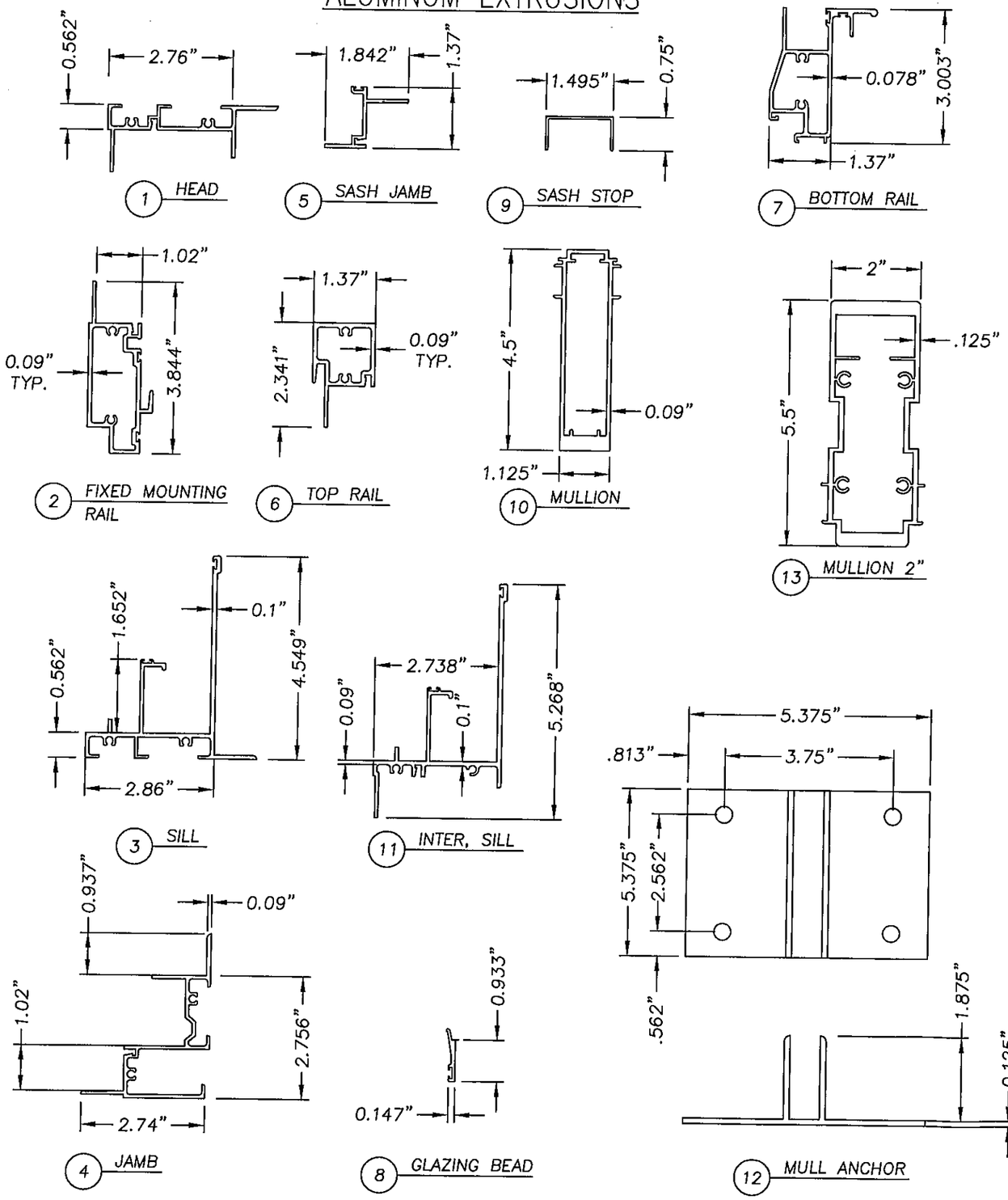

Bill of Materials

Item#	Part#	Description	Material	Manufacturer/Supplier/Comments
1	SUN-251	FRAME HEAD	6063-T6	
2	SUN-252	FIXED MEETING RAIL	6063-T6	
3	SUN-253	FRAME SILL	6063-T6	
4	SUN-254	FRAME JAMB	6005-T5	
5	SUN-255	SASH JAMB	6063-T6	
6	SUN-256	SASH TOP RAIL	6063-T6	
7	SUN-257	SASH BOTTOM RAIL	6063-T6	
8	SUN-258	GLAZING BEAD	6063-T6	
9	SUN-261	SASH STOP	6063-T6	
10	SUN-260	MULLION 1.125"	6063-T6	
11	SUN-259	INTERMEDIATE FRAME SILL	6063-T6	
12	SUN-262	MULLION ANCHOR	6063-T6	
13	SUN-18	MULLION 2"	6063-T6	
14	–	SETTING BLOCK 3/16" X 3/4" X 2" LONG	PVC/EPDM	
15	–	EXTRUDED 60 DURO. EPDM BULB GASKET	EPDM	TREMCO (OR EQUAL)
16	–	STRUCTURAL SILICONE	SILICONE	TREMCO SPECTRUM II (OR EQUAL)
17	–	EXTERIOR GLAZING TAPE	–	TREMCO (OR EQUAL)
18	–	EXTRUDED 70 DURO. EPDM WEDGE GASKET	EPDM	TREMCO (OR EQUAL)
19	–	WEATHERSTRIPPING-.190H X .187W WITH FLUSH FIN	–	ULTRA FAB (OR EQUAL)
20	–	WEATHERSTRIPPING-.250H X .187W WITH FLUSH FIN	–	ULTRA FAB (OR EQUAL)
21	–	WEATHERSTRIPPING-.520H X .187W WITH FIN	–	ULTRA FAB (OR EQUAL)
22	–		–	
23	–	#8 X 1/2" SMS PPH T/AB – PAINTED HEAD	–	
24	–	#8 X 3/4" SMS PPH T/AB	–	
25	–	#8 X 1" SMS PFH TEK#2 – PAINTED HEAD	–	
26	–	#8 X 1 1/4" SMS PPH TEK#2 – PAINTED HEAD	–	
27	–	#8 X 1 1/4" SMS PFH T/AB	–	
28	–	#10 X 1 1/4" SMS PPH T/AB	–	
29	–	ANCHOR ------ SEE ANCHOR SCHEDULE SHEET 5	–	
30	–		–	
31	–	SPIRAL BALANCE	–	CALDWELL MFG. (OR EQUAL)
32	–	BALANCE BRACKET	–	CALDWELL MFG. (OR EQUAL)
33	–	BALANCE GUIDE	NYLON 6	M & M PLASTICS (OR EQUAL)
34	–	SASH GUIDE	NYLON 6	M & M PLASTICS (OR EQUAL)
35	–	SASH WEDGE LOCK	ZAMAK #3	DECO MFG. (OR EQUAL)
36	–	WEEP BAFFLE-20/30 PPI – 5/8" SQ. X 2" LG. W/PSA	FOAM	
37	–	SEAM SEALER	–	SCHNEE MOREHEAD SM5504 (OR EQ)
38	–	–	–	
39	–	UPPER FIXED GLASS	–	
40	–	SASH GLASS	–	
41	–	LOWER FIXED GLASS	–	
42	–	SCREEN	–	
	–	PERIMMETER SEALANT	–	TREMCO (OR EQUAL)
43	–	9/16" LAMINATED GLASS 1/4" ANN. / .060" SAFLEX IIIG / ANN. H.S.	GLASS	
44	–	9/16" LAMINATED GLASS 1/4" H.S. / .060" SAFLEX IIIG / 1/4" H.S.	GLASS	
45	–	7/16" LAMINATED GLASS 3/16" H.S. / .060" SAFLEX IIIG / 3/16" H.S.	GLASS	

Documents Prepared By:
RW BUILDING CONSULTANTS, INC.
P.O. Box 230 Valrico FL 33595
Phone No.: 813.659.9197
Florida Board of Professional Engineers
Certificate Of Authorization No. 9813
Lyndon F. Schmidt, P.E. No. 43409
8-25-09

PRODUCT: SERIES '275' SINGLE HUNG TAS 201 – 203 SMALL MISSILE

PART OR ASSEMBLY: BILL OF MATERIALS AND COMPONENTS

NO.	DATE	REVISIONS	BY
3	4/21/09	REVISE TO 2007 FBC	AL
2	8/10/07	REVISE PER DADE REQUEST	YV
1	7/17/07	REVISE PER DADE LETTER	WH

PRODUCT REVISED
as complying with the Florida Building Code
Acceptance No. 09-0428.04
Expiration Date SEPT. 4, 2014
By Manuel Pena
Miami-Dade Product Control Division

DATE: 04/25/06
SCALE: N.T.S.
DWG. BY: EW
CHK. BY: LFS
DRAWING NO.: S-2667
SHEET 4 OF 17

© 2009 R.W. BUILDING CONSULTANTS INC.

R:\A - Projects\Project Folders\Proj 901 - 1000\p1953\PF ORIGINAL\S-2667\S-2667 R3.dwg, 4

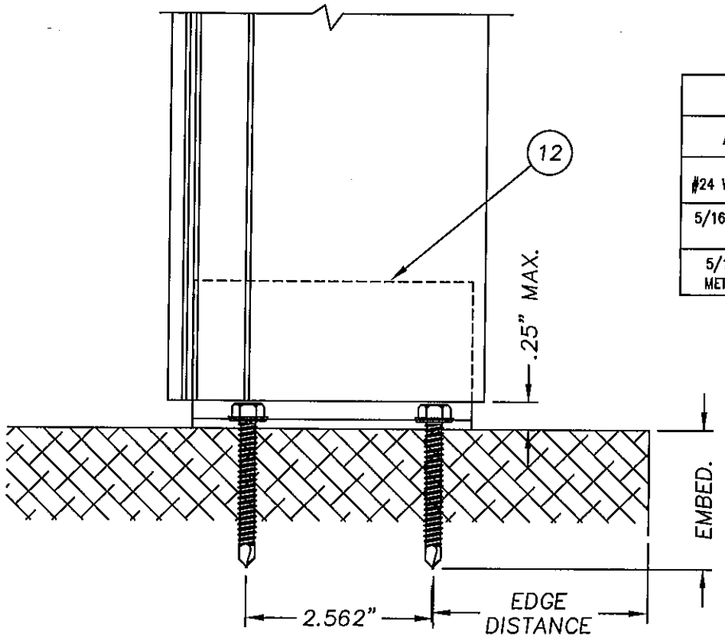

K / 5 MULLION ANCHOR
WINDOW FRAME & SASH REMOVED FOR CLARITY

APPROVED ANCHOR SCHEDULE

Anchor	Description	Manufacturer
#24 WOOD SCREW	MAIN MEMBER SG = 0.55 MIN. EDGE DISTANCE = 1.5" MIN., EMBEDMENT = 2.375" MIN., CL = 2" MIN.	N/A
5/16" CONCRETE SCREW	CONCRETE = 3,295 PSI MIN, CONFORMING TO ACI 301 EDGE DISTANCE = 3.125" MIN.., EMBEDMENT = 1.25" MIN., CL = 3.75" MIN.	ITW BUILDEX
5/16" SHEET METAL SCREW	SUBSTRATE = 16 GA. STEEL MIN., ASTM A36 EDGE DISTANCE = 1" MIN., EMBEDMENT = 3 THREADS PROTRUDING MIN., CL = 1" MIN.	HILTI DRILL-FLEX & KWIK-FLEX

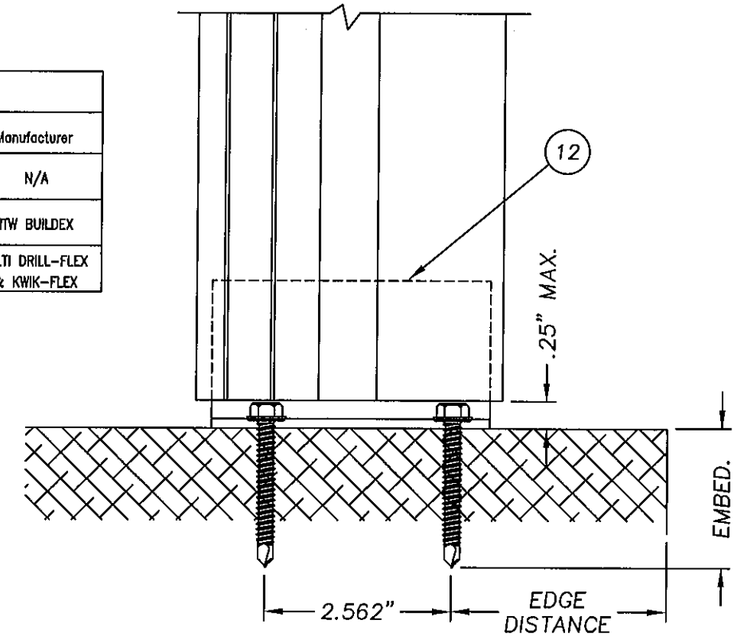

L / 5 MULLION ANCHOR
WINDOW FRAME & SASH REMOVED FOR CLARITY

PRODUCT REVISED
as complying with the Florida Building Code
Acceptance No. 09-0428.04
Expiration Date SEPT. 2, 2014
By Manuel Perez
Miami Dade Product Control Division

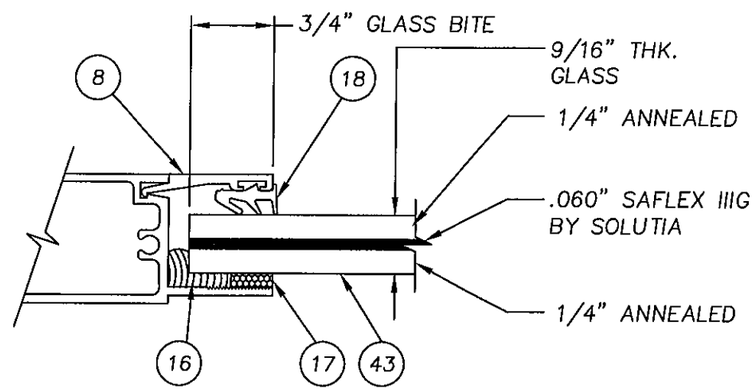

GLAZING DETAIL

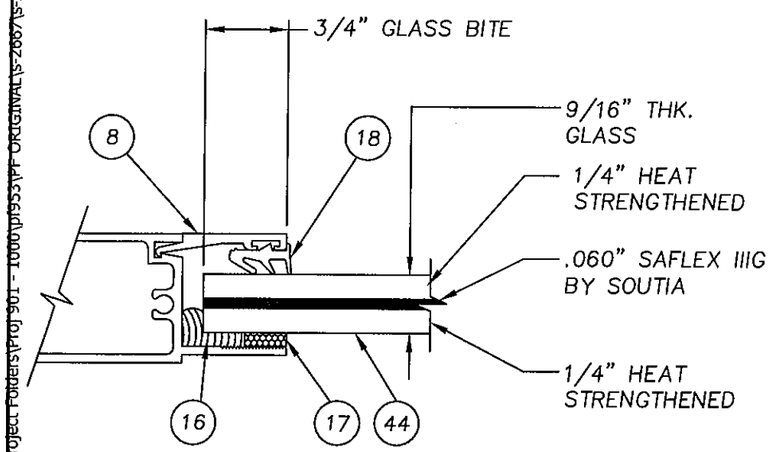

GLAZING DETAIL

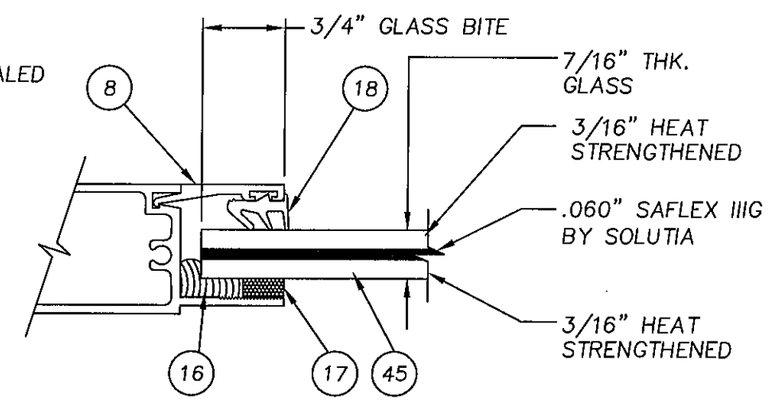

GLAZING DETAIL

Documents Prepared By:
R.W. BUILDING CONSULTANTS, INC.
P.O. Box 230 Valrico FL. 33595
Phone No.: 813.659.9197
Florida Board of Professional Engineers
Certificate Of Authorization No. 9813
Lyndon F. Schmidt, P.E. No. 43409

PRODUCT: SERIES '275' SINGLE HUNG TAS 201 – 203 SMALL MISSILE

PART OR ASSEMBLY: GLAZING DETAILS

REVISIONS

NO.	DATE	BY
3	4/21/09	AL
2	8/10/07	YV
1	7/17/07	WH

REVISE TO 2007 FBC
REVISE PER DADE REQUEST
REVISE PER DADE LETTER

DATE: 04/25/06
SCALE: N.T.S.
DWG. BY: EW
CHK. BY: LFS
DRAWING NO.: S-2667
SHEET 5 OF 17

© 2009 R.W. BUILDING CONSULTANTS INC.

R:\A - Projects\Project Folders\Proj 901 - 1000\p0953\PF ORIGINAL\S-2667\S-2667 R3.dwg, 5

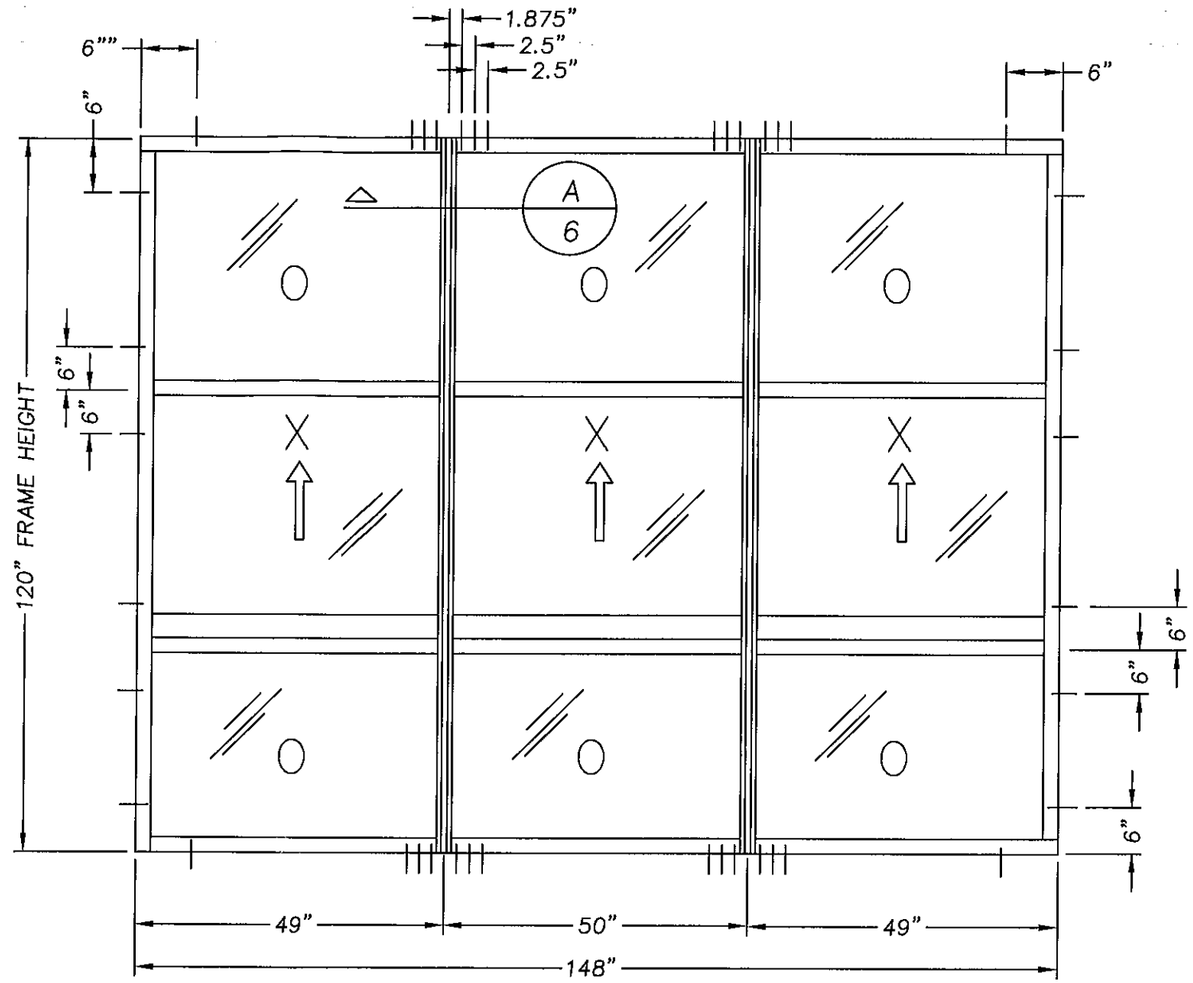

3-LITE MULTIPLE WINDOW SYSTEM
DESIGN PRESSURE
+100 PSF / -100 PSF

APPROVED ANCHORS
5/16" SHEET METAL SCREWS

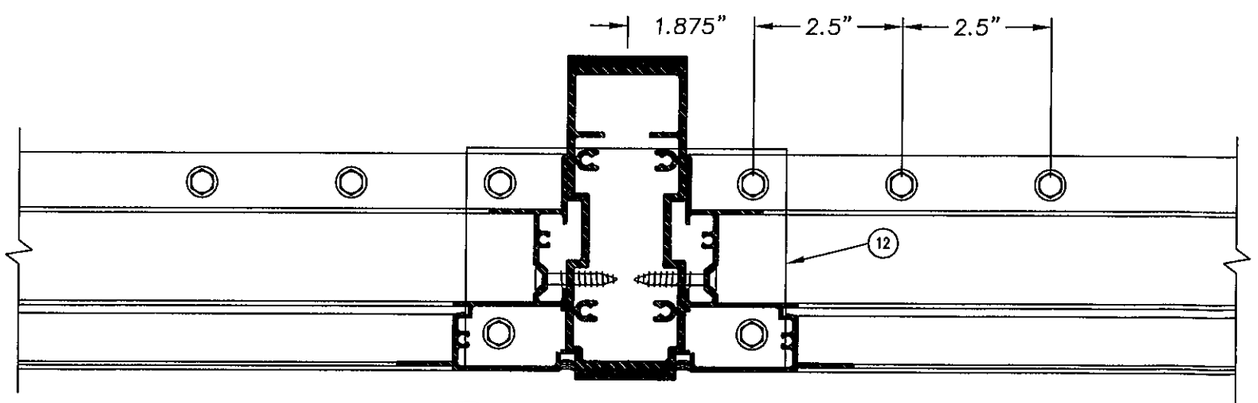

A / 6 ANCHORING AT MULLION
SASH AND GLASS REMOVED FOR CLARITY

PRODUCT REVISED
as complying with the Florida Building Code
Acceptance No. 09-0478.04
Expiration Date SEPT. 2, 2014
By Manuel Irro
Miami Dade Product Control Division

Documents Prepared By:
RW BUILDING CONSULTANTS, INC.
P.O. Box 230 Valrico FL 33595
Phone No.: 813.659.9197
Florida Board of Professional Engineers
Certificate Of Authorization No. 9813
8-2-07
Lyndon F. Schmidt, P.E. No. 43409

PRODUCT:
SERIES '275' SINGLE HUNG
TAS 201 – 203
SMALL MISSILE

PART OR ASSEMBLY:
120" 3-Lite Multi-Unit
5/16" Sheet Metal Screws

NO.	DATE	REVISIONS	BY
3	4/21/09	REVISE TO 2007 FBC	AL
2	8/10/07	REVISE PER DADE REQUEST	YV
1	7/17/07	REVISE PER DADE LETTER	WH

DATE: 04/25/06
SCALE: N.T.S.
DWG. BY: EW
CHK. BY: LFS
DRAWING NO.: S-2667
SHEET 6 OF 17

© 2009 R.W. BUILDING CONSULTANTS INC.

R:\A - Projects\Project Folders\Proj 901 - 1000\p1955\PF ORIGINALS-2667\S-2667 FS.dwg, 6

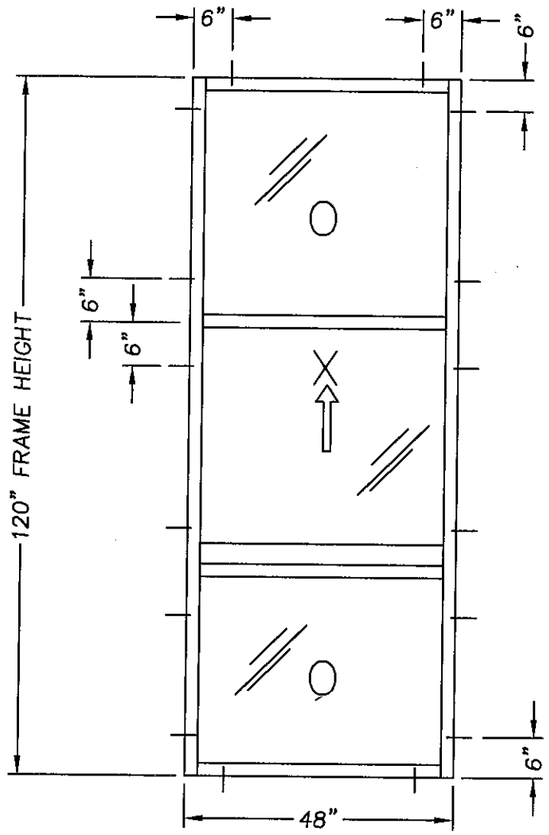

3 LITE SINGLE HUNG
DESIGN PRESSURE
+100 PSF / −100 PSF

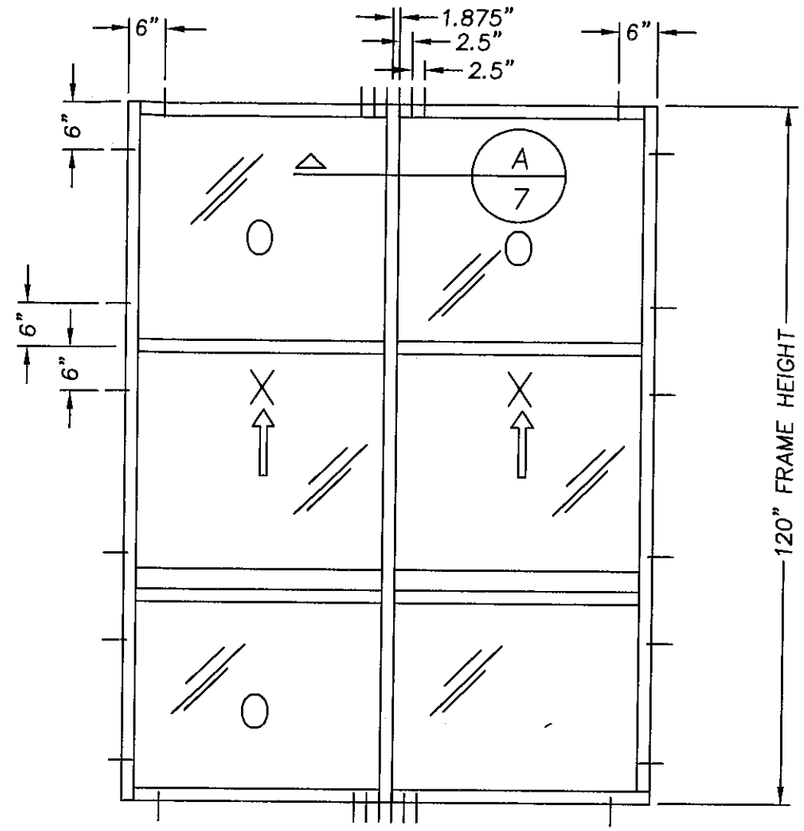

3–LITE TWIN WINDOW SYSTEM
DESIGN PRESSURE
+100 PSF / −100 PSF

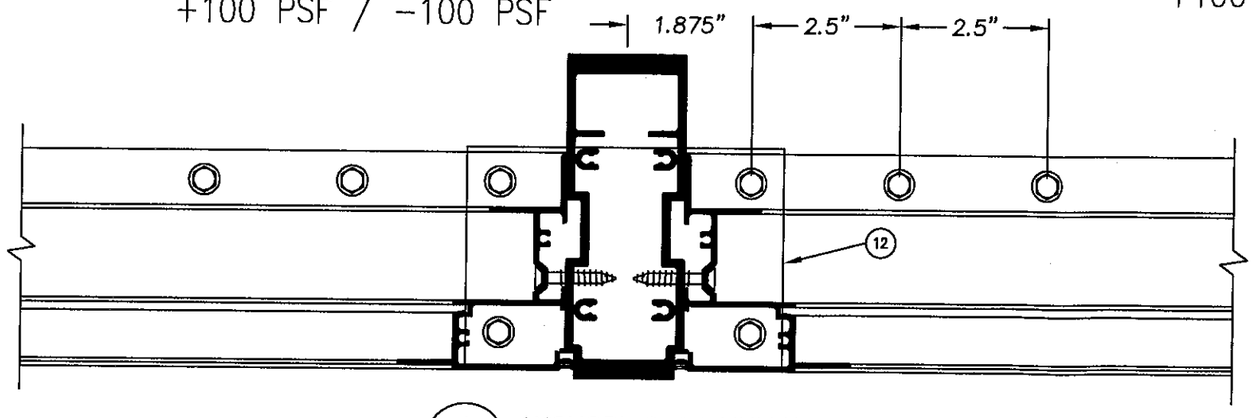

A / 7 ANCHORING AT MULLION
SASH AND GLASS REMOVED FOR CLARITY

APPROVED ANCHORS
5/16" SHEET METAL SCREWS

PRODUCT REVISED
as complying with the Florida
Building Code
Acceptance No. 09-0428.04
Expiration Date SEPT. 2, 2014
By Manuel Perez
Miami-Dade Product Control
Division

Documents Prepared By:
R.W. BUILDING CONSULTANTS, INC.
P.O. Box 230 Valrico FL 33595
Phone No.: 813.659.9197
Florida Board of Professional Engineers
Certificate Of Authorization No. 9813
Lyndon F. Schmidt, P.E. No. 43409
5-14-09

PRODUCT:
SERIES '275' SINGLE HUNG
TAS 201 – 203
SMALL MISSILE

PART OR ASSEMBLY:
120" 3–Lite Sgl. & Twin
5/16" Sheet Metal Screws

NO.	DATE	REVISIONS	BY
3	4/21/09	REVISE TO 2007 FBC	AL
2	8/10/07	REVISE PER DADE REQUEST	YV
1	7/17/07	REVISE PER DADE LETTER	WH

DATE: 04/25/06
SCALE: N.T.S.
DWG. BY: EW
CHK. BY: LFS
DRAWING NO.: S–2667
SHEET 7 OF 17

© 2009 R.W. BUILDING CONSULTANTS INC.

R:\A - Projects\Project Folders\Proj 901 - 1000\pf953\PF ORIGINAL\s-2667\s-2667 R3.dwg, 7

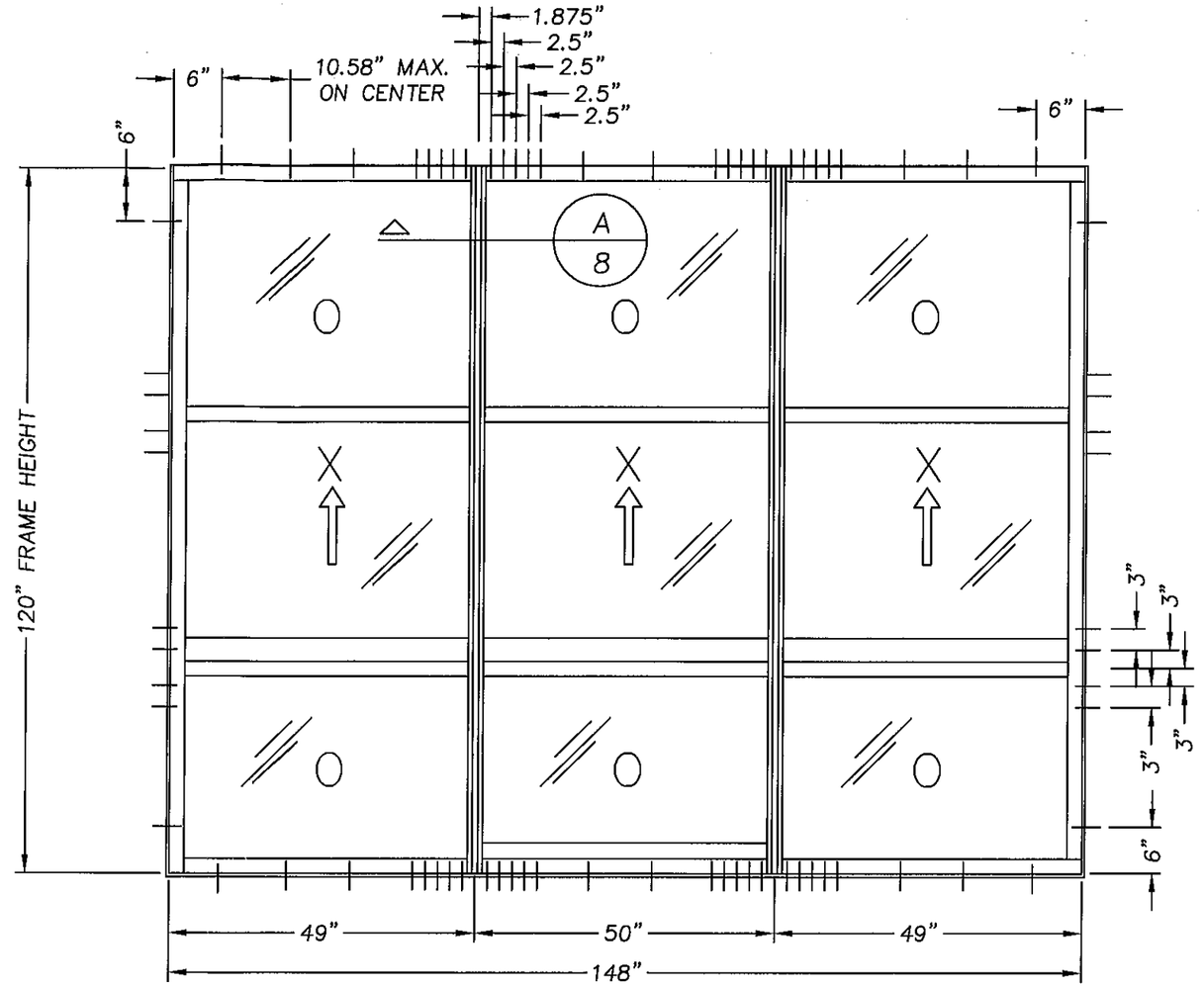

3-LITE MULTIPLE WINDOW SYSTEM
DESIGN PRESSURE
+100 PSF / -100 PSF

APPROVED ANCHORS
#24g WOOD SCREWS

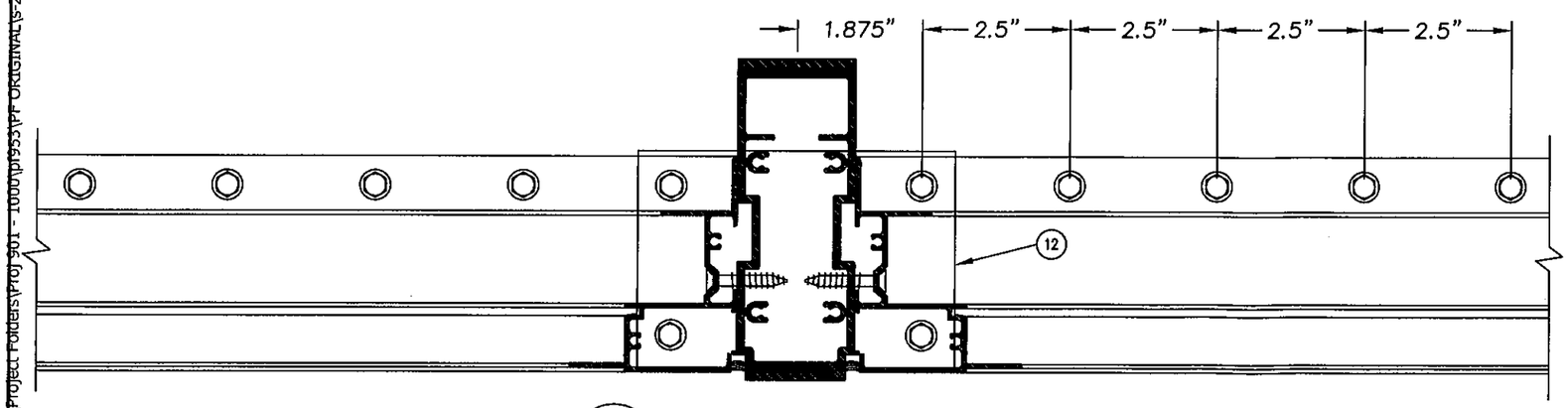

A / 8 ANCHORING AT MULLION
SASH AND GLASS REMOVED FOR CLARITY

PRODUCT REVISED
as complying with the Florida Building Code
Acceptance No. 09-0428.04
Expiration Date SEPT. 2, 2014
By Manuel Perez
Miami Dade Product Control Division

Documents Prepared By:
RW BUILDING CONSULTANTS, INC.
P.O. Box 230 Valrico FL 33595
Phone No.: 813.659.9197
Florida Board of Professional Engineers
Certificate Of Authorization No. 9813
LF-2-F25-09
Lyndon F. Schmidt, P.E. No. 43409

PRODUCT:
SERIES '275' SINGLE HUNG
TAS 201 - 203
SMALL MISSILE

PART OR ASSEMBLY:
120" 3-Lite Multi-Unit
#24g Wood Screws

REVISIONS

NO.	DATE		BY
3	4/21/09	REVISE TO 2007 FBC	AL
2	8/10/07	REVISE PER DADE REQUEST	YV
1	7/17/07	REVISE PER DADE LETTER	WH

DATE: 04/25/06
SCALE: N.T.S.
DWG. BY: EW
CHK. BY: LFS
DRAWING NO.: S-2667
SHEET 8 OF 17

© 2009 R.W. BUILDING CONSULTANTS INC.

R:\A - Projects\Project Folders\Proj 901 - 1000\p1953\PF ORIGINAL\S-2667\S-2667 R3.dwg, 8

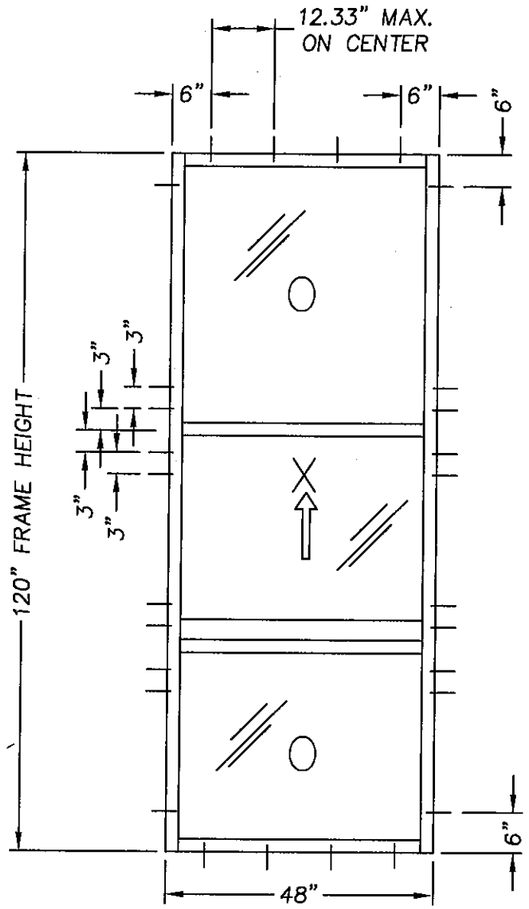

3 LITE SINGLE HUNG
DESIGN PRESSURE
+100 PSF / −100 PSF

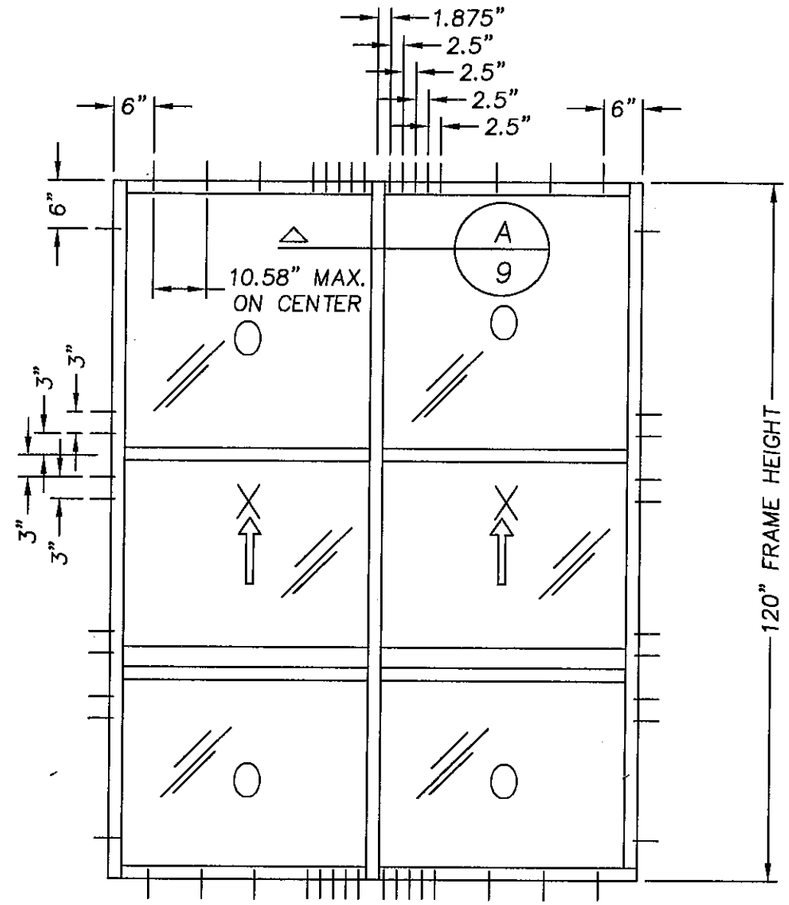

3-LITE TWIN WINDOW SYSTEM
DESIGN PRESSURE
+100 PSF / −100 PSF

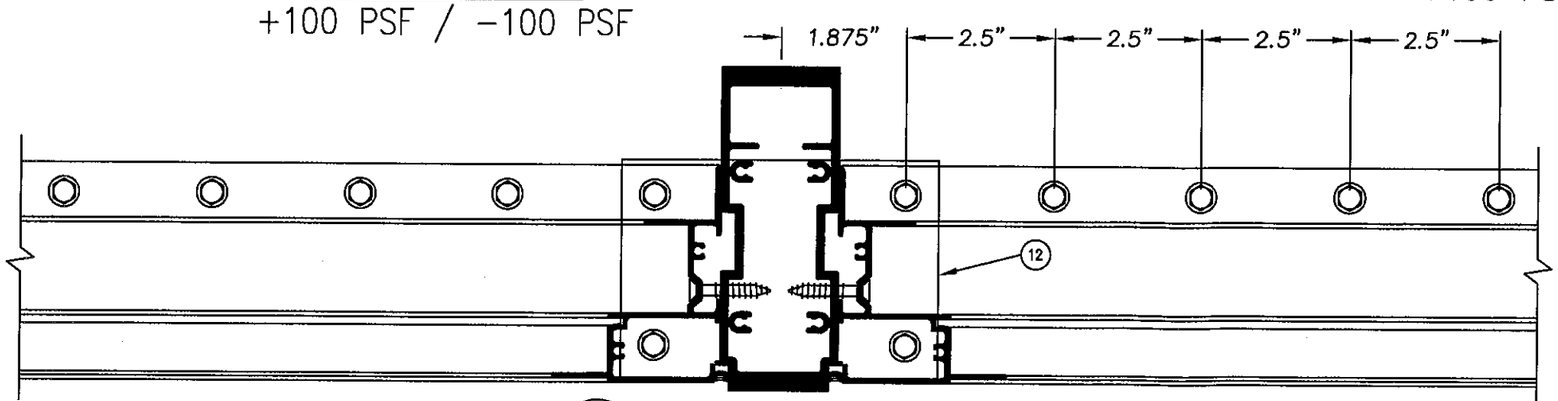

A / 9 ANCHORING AT MULLION
SASH AND GLASS REMOVED FOR CLARITY

APPROVED ANCHORS
#24g WOOD SCREW

PRODUCT REVISED
as complying with the Florida Building Code
Acceptance No. 09-0428.04
Expiration Date SEPT. 2, 2014
By Manuel Perez
Miami-Dade Product Control Division

Documents Prepared By:
RW BUILDING CONSULTANTS, INC.
P.O. Box 230 Valrico FL. 33595
Phone No.: 813.659.9197
Florida Board of Professional Engineers
Certificate Of Authorization No. 9813
Lyndon F. Schmidt, P.E. No. 43409
5-14-09

PRODUCT:
SERIES '275' SINGLE HUNG
TAS 201 – 203
SMALL MISSILE

PART OR ASSEMBLY:
120" 3-Lite Sgl & Twin
#24g Wood Screws

NO.	DATE	BY	REVISIONS
3	4/21/09	AL	REVISE TO 2007 FBC
2	8/10/07	YV	REVISE PER DADE REQUEST
1	7/17/07	WH	REVISE PER DADE LETTER

DATE: 04/25/06
SCALE: N.T.S.
DWG. BY: EW
CHK. BY: LFS
DRAWING NO.: S-2667
SHEET 9 OF 17

© 2009 R.W. BUILDING CONSULTANTS INC.

R:\A - Projects\Project Folders\Proj 901 - 1000\pf953\PF ORIGINAL\s-2667\s-2667 R3.dwg, 9

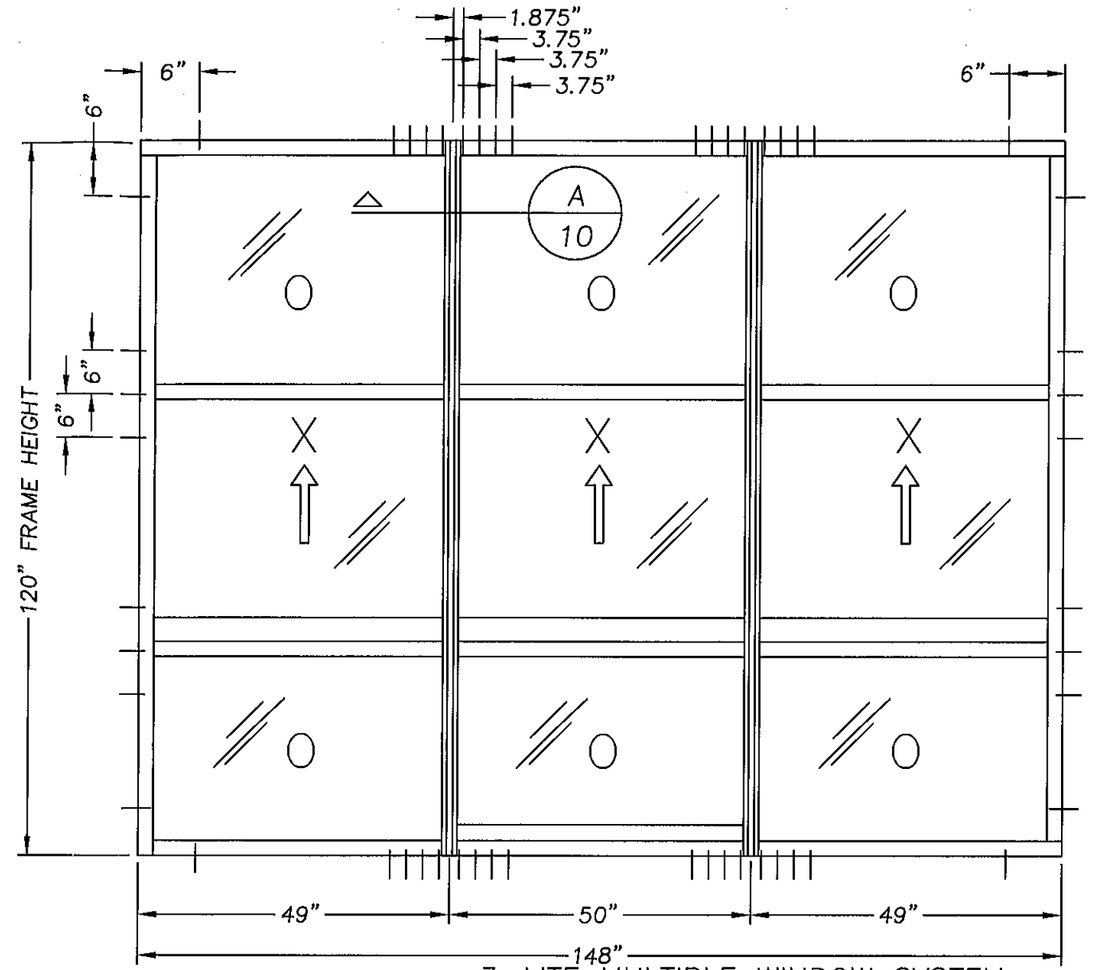

3-LITE MULTIPLE WINDOW SYSTEM
DESIGN PRESSURE
+100 PSF / -100 PSF

APPROVED ANCHORS
5/16" ITW TAPCON

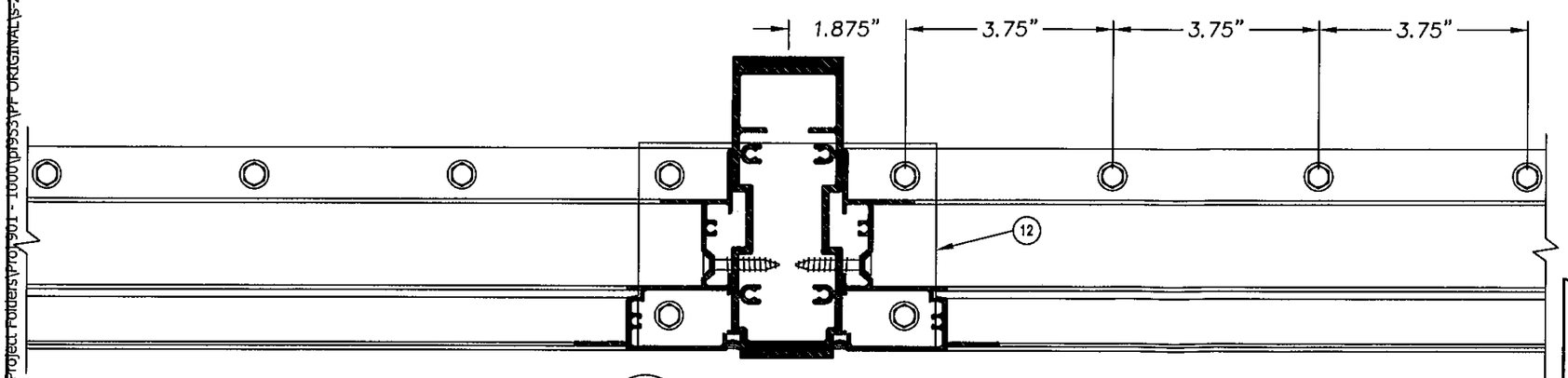

A / 10 ANCHORING AT MULLION
SASH AND GLASS REMOVED FOR CLARITY

PRODUCT REVISED
as complying with the Florida Building Code
Acceptance No. 09-0428.04
Expiration Date SEPT. 2, 2014
By Manuel Perez
Miami-Dade Product Control Division

Documents Prepared By:
R.W. BUILDING CONSULTANTS, INC.
P.O. Box 230 Valrico FL 33595
Phone No.: 813.659.9197
Florida Board of Professional Engineers
Certificate Of Authorization No. 9813
Lyndon F. Schmidt, P.E. No. 43409

PRODUCT:
SERIES '275' SINGLE HUNG
TAS 201 - 203
SMALL MISSILE

PART OR ASSEMBLY:
120" 3-Lite Multi-Unit
5/16" Concrete Screws

NO.	DATE	REVISIONS	BY
3	4/21/09	REVISE TO 2007 FBC	AL
2	8/10/07	REVISE PER DADE REQUEST	YV
1	7/17/07	REVISE PER DADE LETTER	WH

DATE: 04/25/06
SCALE: N.T.S.
DWG. BY: EW
CHK. BY: LFS
DRAWING NO.: S-2667
SHEET 10 OF 17

© 2009 R.W. BUILDING CONSULTANTS INC.

R:\A - Projects\Project Folders\Proj 901 - 1000\p1953\PF ORIGINAL\S-2667\S-2667 R3.dwg, 10

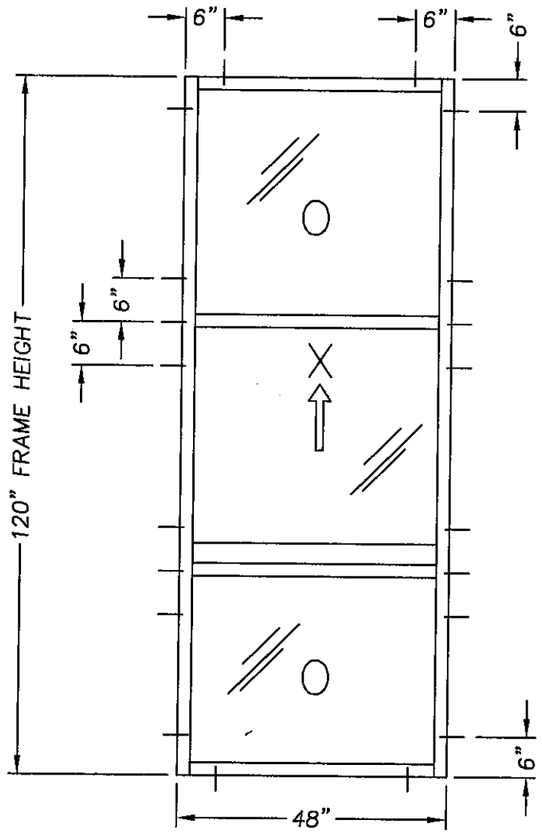

3 LITE SINGLE HUNG
DESIGN PRESSURE
+100 PSF / −100 PSF

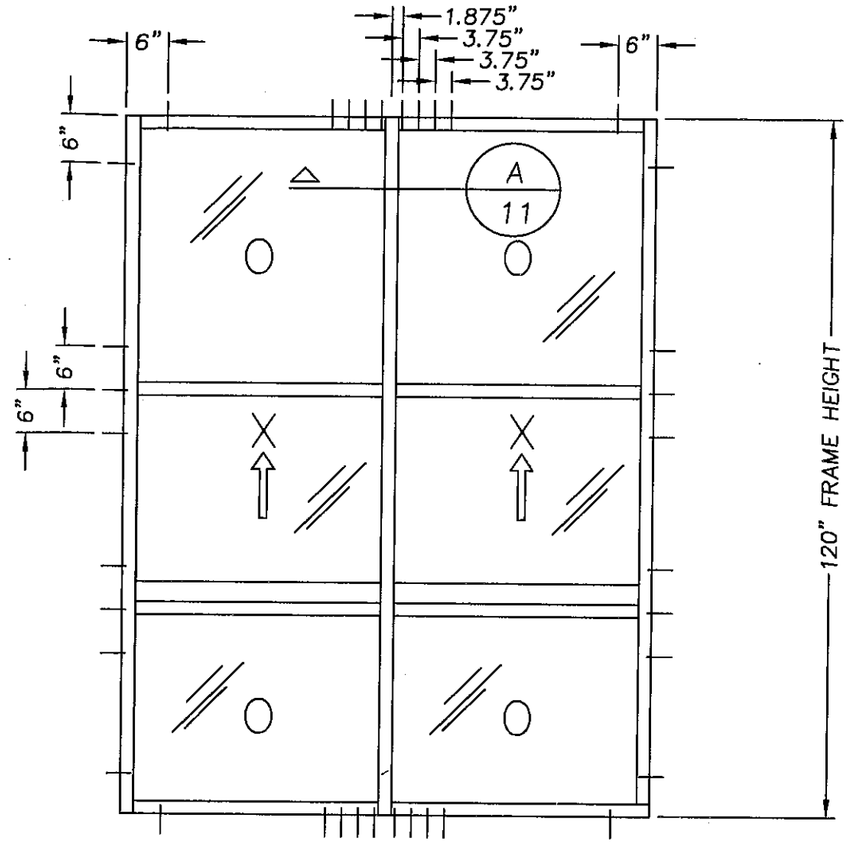

3-LITE TWIN WINDOW SYSTEM
DESIGN PRESSURE
+100 PSF / −100 PSF

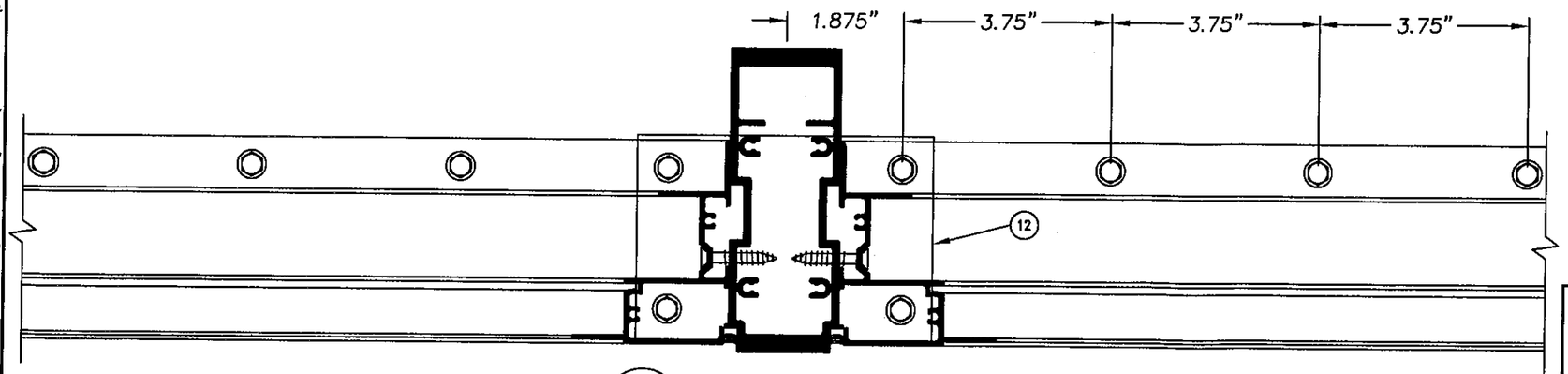

A / 11 ANCHORING AT MULLION
SASH AND GLASS REMOVED FOR CLARITY

APPROVED ANCHORS
5/16" ITW TAPCON

PRODUCT REVISED
as complying with the Florida Building Code
Acceptance No. 09-0428.04
Expiration Date SEPT. 2, 2014
By Maxwell Perez
Miami Dade Product Control Division

Documents Prepared By:
R.W. BUILDING CONSULTANTS, INC.
P.O. Box 230 Valrico FL 33595
Phone No.: 813.659.9197
Florida Board of Professional Engineers
Certificate Of Authorization No. 9813
Lyndon F. Schmidt, P.E. No. 43409

PRODUCT:
SERIES '275' SINGLE HUNG
TAS 201 – 203
SMALL MISSILE

PART OR ASSEMBLY:
120" 3-Lite Sgl & Twin
5/16" Concrete Screws

NO.	DATE	REVISIONS	BY
3	4/21/09	REVISE TO 2007 FBC	AL
2	8/10/07	REVISE PER DADE REQUEST	YV
1	7/17/07	REVISE PER DADE LETTER	WH

DATE: 04/25/06
SCALE: N.T.S.
DWG. BY: EW
CHK. BY: LFS
DRAWING NO.: S-2667
SHEET 11 OF 17

© 2009 R.W. BUILDING CONSULTANTS INC.

R:\A - Projects\Project Folders\Proj 901 - 1000\pf953\PF ORIGINAL\s-2667\s-2667 R3.dwg, 11

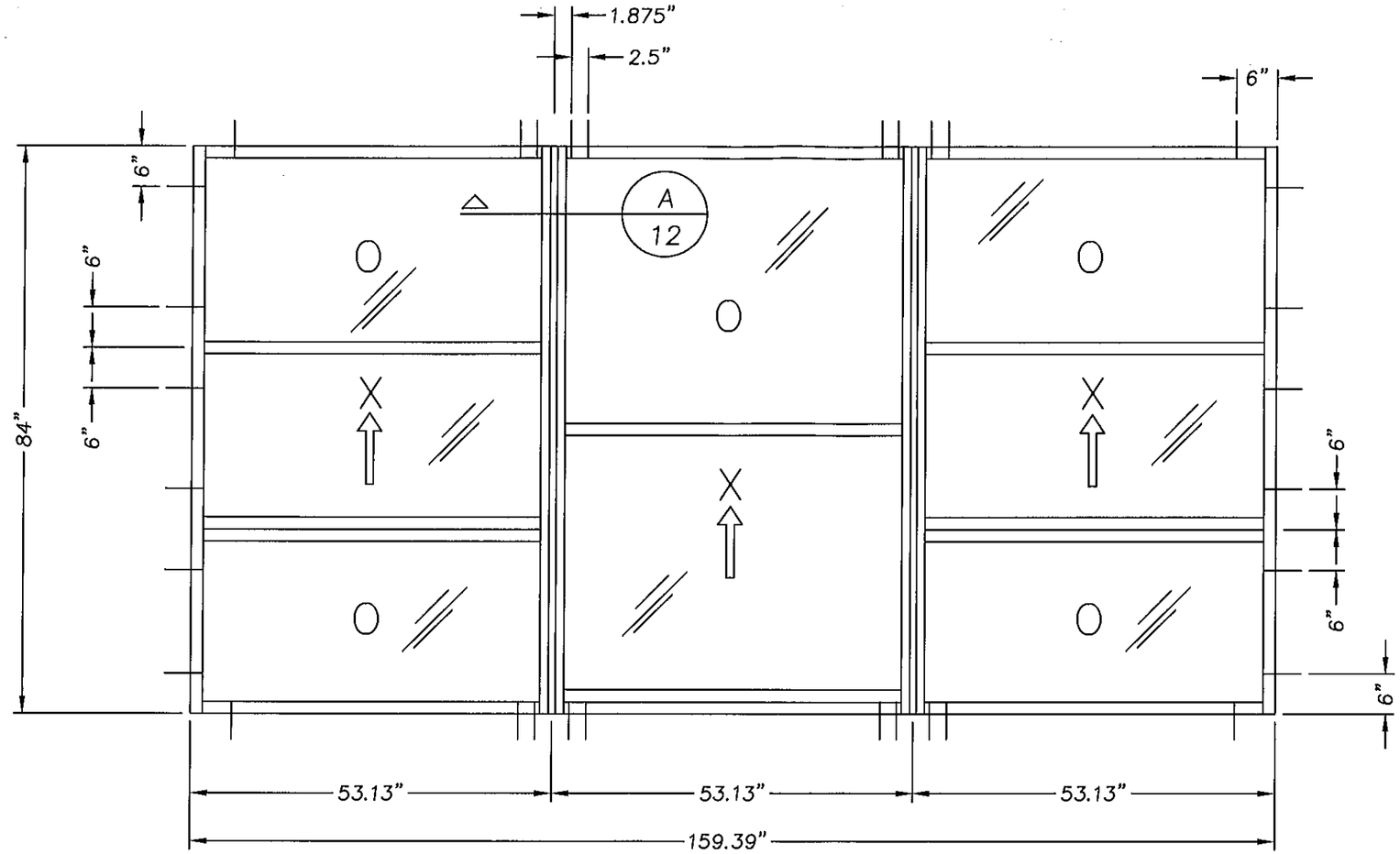

MULTIPLE WINDOW SYSTEM 2 LITE AND/OR 3-LITE

DESIGN PRESSURE

+78.23 PSF / -87.78 PSF

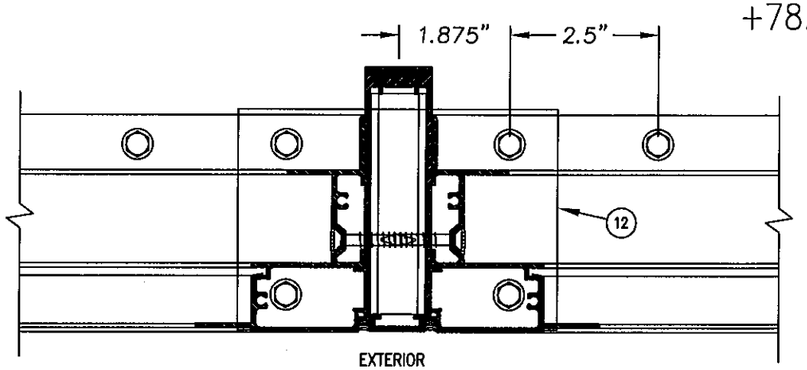

A / 12 ANCHORING AT MULLION
SASH AND GLASS REMOVED FOR CLARITY

APPROVED ANCHORS
5/16" SHEET METAL SCREWS

PRODUCT REVISED
as complying with the Florida Building Code
Acceptance No. 09-0428.04
Expiration Date SEPT. 2, 2014
By Manuel Perez
Miami/Dade Product Control Division

Documents Prepared By:
RW BUILDING CONSULTANTS, INC.
P.O. Box 230 Valrico FL 33595
Phone No.: 813.659.9197
Florida Board of Professional Engineers
Certificate Of Authorization No. 9813
8-25-09
Lyndon F. Schmidt, P.E. No. 43409

PRODUCT:
SERIES '275' SINGLE HUNG
TAS 201 - 203
SMALL MISSILE

PART OR ASSEMBLY:
84" 2-Lite & 3-Lite Multi-unit
5/16" Sheet Metal Screws

NO.	DATE	REVISIONS	BY
3	4/21/09	REVISE TO 2007 FBC	AL
2	8/10/07	REVISE PER DADE REQUEST	YV
1	7/17/07	REVISE PER DADE LETTER	WH

DATE: 04/25/06
SCALE: N.T.S.
DWG. BY: EW
CHK. BY: LFS
DRAWING NO.: S-2667
SHEET 12 OF 17

© 2009 R.W. BUILDING CONSULTANTS INC.

R:\A - Projects\Project Folders\Proj 901 - 1000\p1953\PF ORIGINALS\S-2667\S-2667 R3.dwg, 12

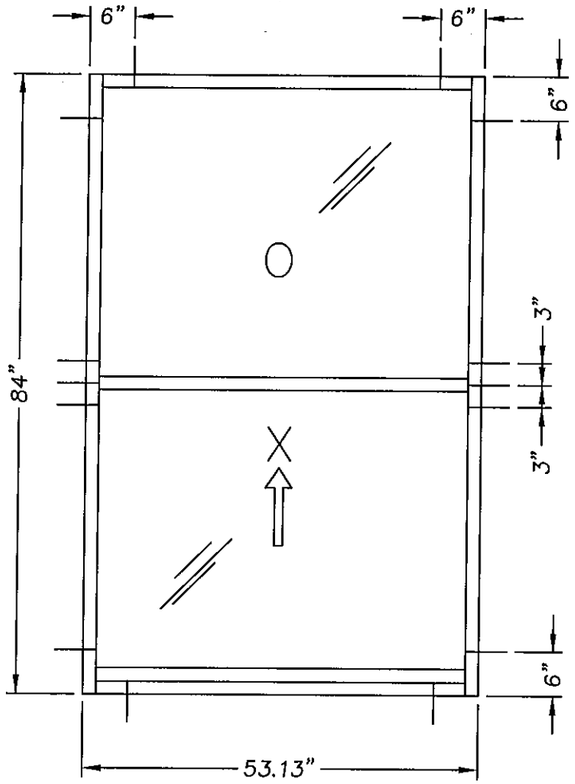

2 LITE SINGLE HUNG
DESIGN PRESSURE
+100 PSF / -120 PSF

APPROVED ANCHORS
5/16" SHEET METAL SCREWS

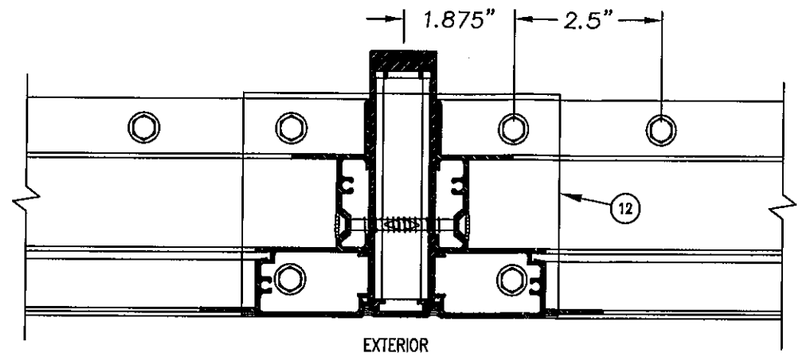

A / 13 ANCHORING AT MULLION
SASH AND GLASS REMOVED FOR CLARITY

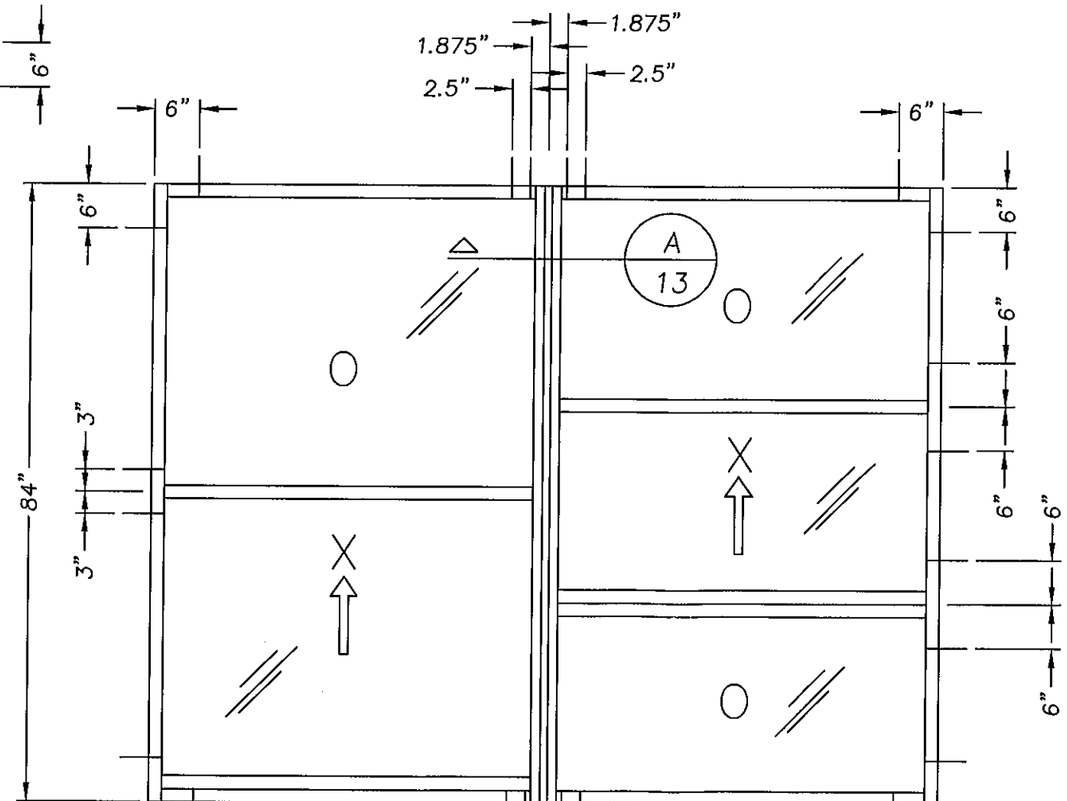

MULTIPLE WINDOW SYSTEM 2 LITE AND/OR 3-LITE
DESIGN PRESSURE +78.23 PSF / -87.78 PSF

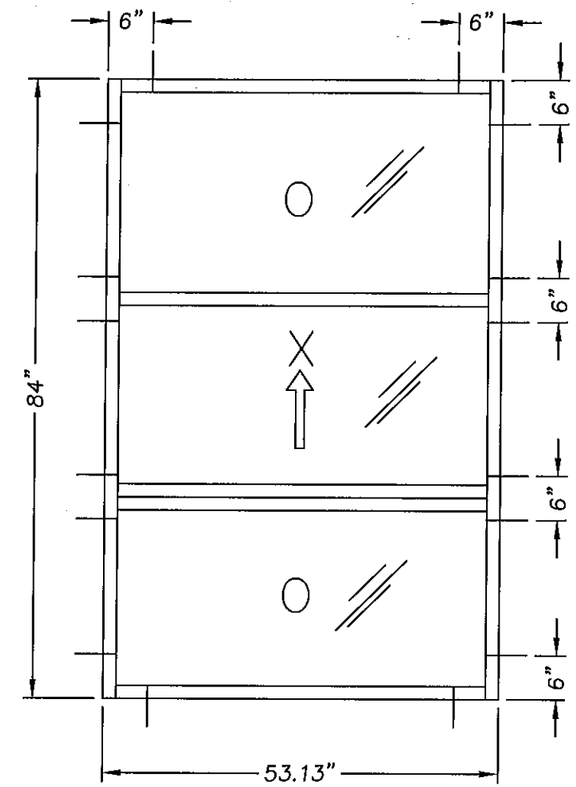

3 LITE SINGLE HUNG
DESIGN PRESSURE
+100 PSF / -120 PSF

APPROVED ANCHORS
5/16" SHEET METAL SCREWS

PRODUCT REVISED
as complying with the Florida Building Code
Acceptance No. 09-0428.04
Expiration Date SEPT. 2, 2014
By Manuel Perez
Miami Dade Product Control Division

Documents Prepared By:
RW BUILDING CONSULTANTS, INC.
P.O. Box 230 Valrico FL. 33595
Phone No.: 813.659.9197
Florida Board of Professional Engineers
Certificate Of Authorization No. 9813
8-25-09
Lyndon F. Schmidt, P.E. No. 43409

PRODUCT:
SERIES '275' SINGLE HUNG
TAS 201 - 203
SMALL MISSILE

PART OR ASSEMBLY:
84" 2-Lite & 3-Lite, Sgl & Twin
5/16" Sheet Metal Screws

NO.	DATE	REVISIONS	BY
3	4/21/09	REVISE TO 2007 FBC	AL
2	8/10/07	REVISE PER DADE REQUEST	YV
1	7/17/07	REVISE PER DADE LETTER	WH

DATE: 04/25/06
SCALE: N.T.S.
DWG. BY: EW
CHK. BY: LFS
DRAWING NO.: S-2667
SHEET 13 OF 17

© 2009 R.W. BUILDING CONSULTANTS INC.

R:\A - Projects\Project Folders\Proj 901 - 1000\pl953\PF ORIGINAL\s-2667\s-2667 R3.dwg, 13

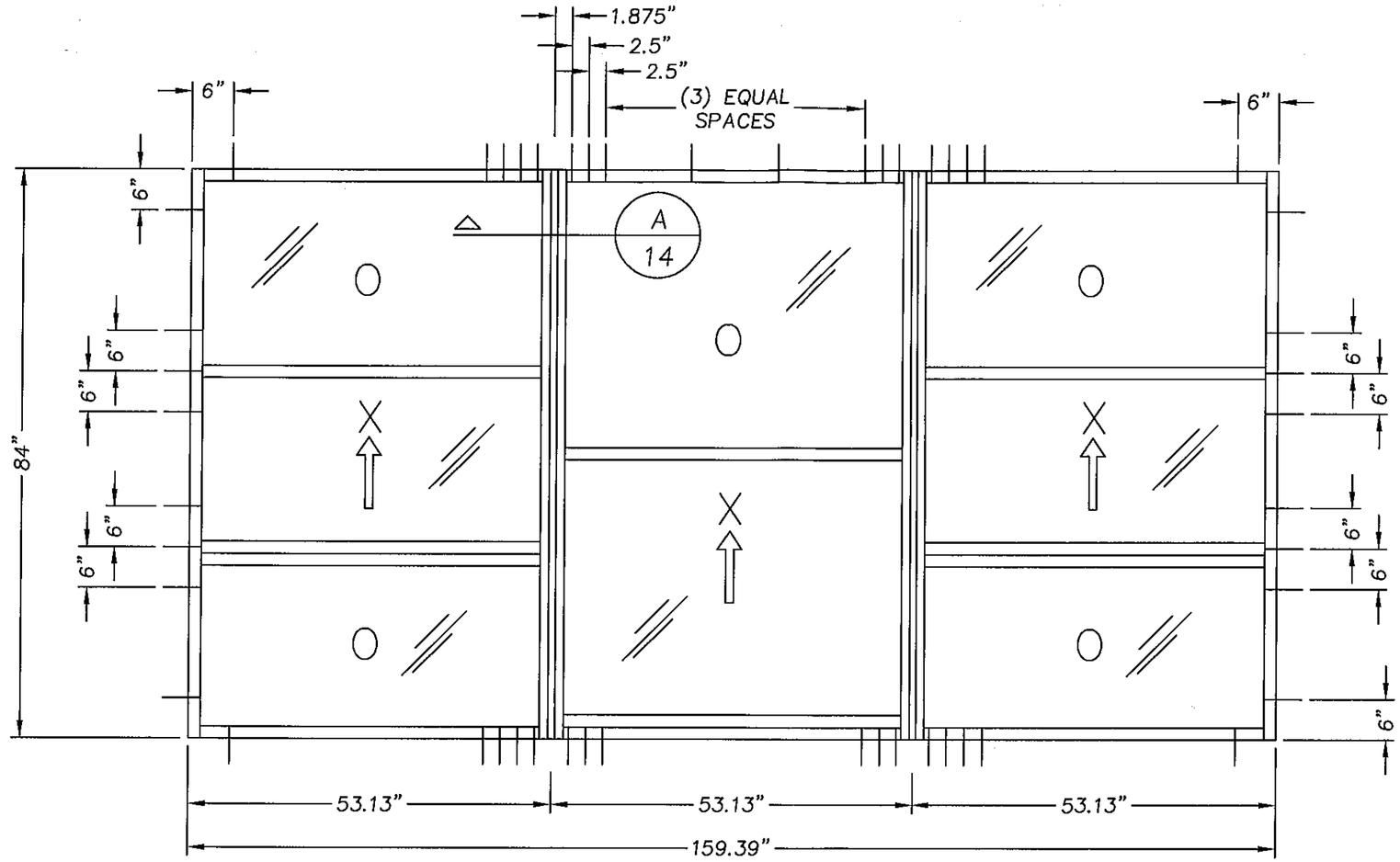

MULTIPLE WINDOW SYSTEM 2 LITE AND/OR 3-LITE
DESIGN PRESSURE +78.23 PSF / -87.78 PSF

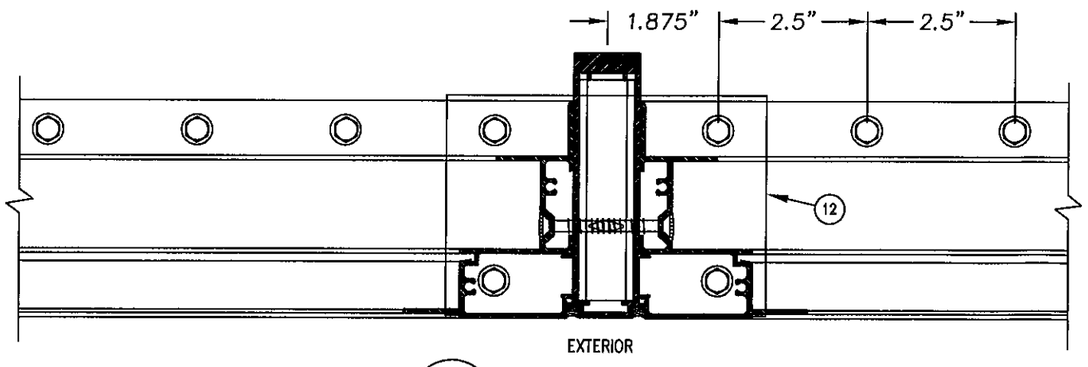

A / 14 ANCHORING AT MULLION
SASH AND GLASS REMOVED FOR CLARITY

APPROVED ANCHORS
#24g WOOD SCREWS

PRODUCT REVISED
as complying with the Florida Building Code
Acceptance No. 09-0428.04
Expiration Date SEPT. 27, 2014
By Manuel Perez
Miami-Dade Product Control Division

Documents Prepared By:
RW BUILDING CONSULTANTS, INC.
P.O. Box 230 Valrico FL 33595
Phone No.: 813.659.9197
Florida Board of Professional Engineers
Certificate Of Authorization No. 9813
Lyndon F. Schmidt, P.E. No. 43406

PRODUCT:
SERIES '275' SINGLE HUNG
TAS 201 - 203
SMALL MISSILE

PART OR ASSEMBLY:
84" 2-Lite & 3-Lite Multi-unit
#24g Wood Screws

REVISIONS

NO.	DATE		BY
3	4/21/09	REVISE TO 2007 FBC	AL
2	8/10/07	REVISE PER DADE REQUEST	YV
1	7/17/07	REVISE PER DADE LETTER	WH

DATE: 04/25/06
SCALE: N.T.S.
DWG. BY: EW
CHK. BY: LFS
DRAWING NO.: S-2667
SHEET 14 OF 17

© 2009 R.W. BUILDING CONSULTANTS INC.

R:\A - Projects\Project Folders\Proj 901 - 1000\pj955\PF ORIGINAL\S-2667\S-2667 R3.dwg, 14

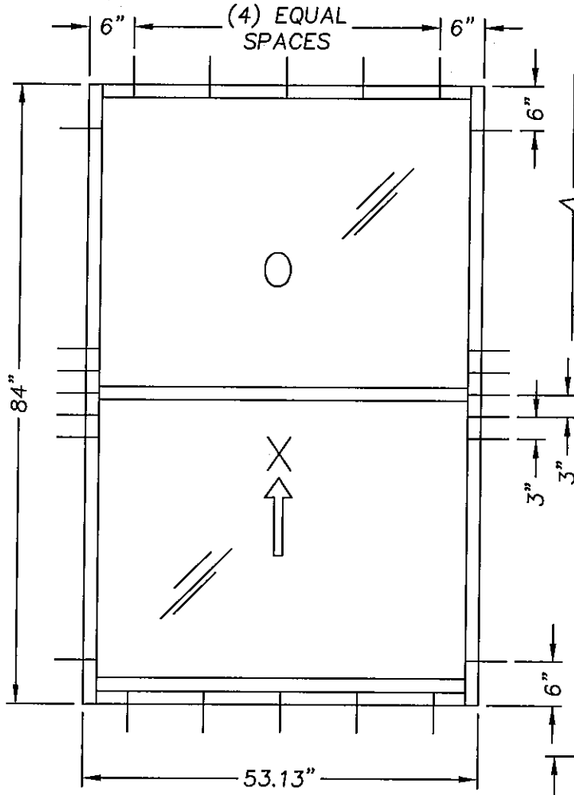

2 LITE SINGLE HUNG
DESIGN PRESSURE
+100 PSF / −120 PSF

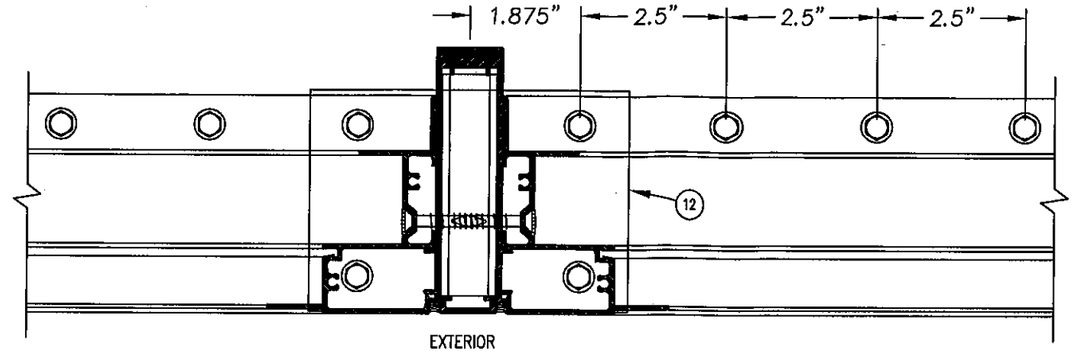

A/15 ANCHORING AT MULLION
SASH AND GLASS REMOVED FOR CLARITY

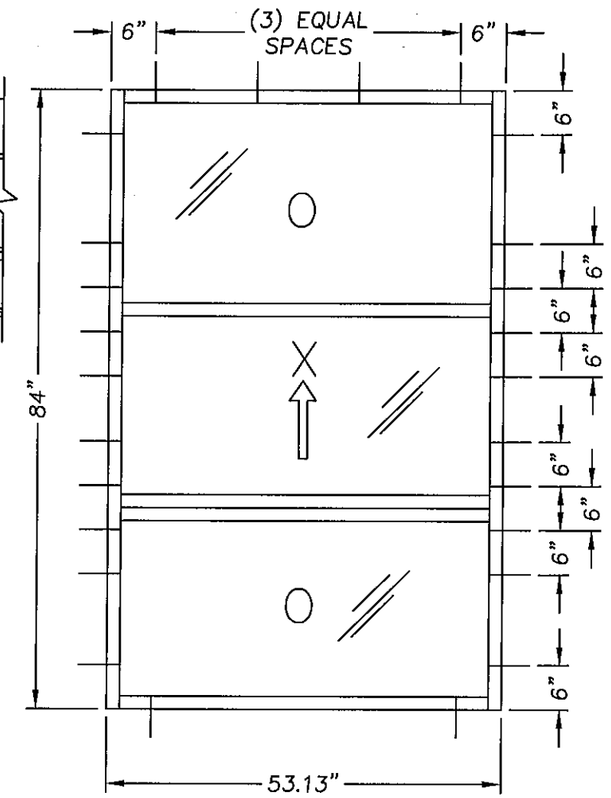

3 LITE SINGLE HUNG
DESIGN PRESSURE
+100 PSF / −120 PSF

APPROVED ANCHORS
#24g WOOD SCREWS

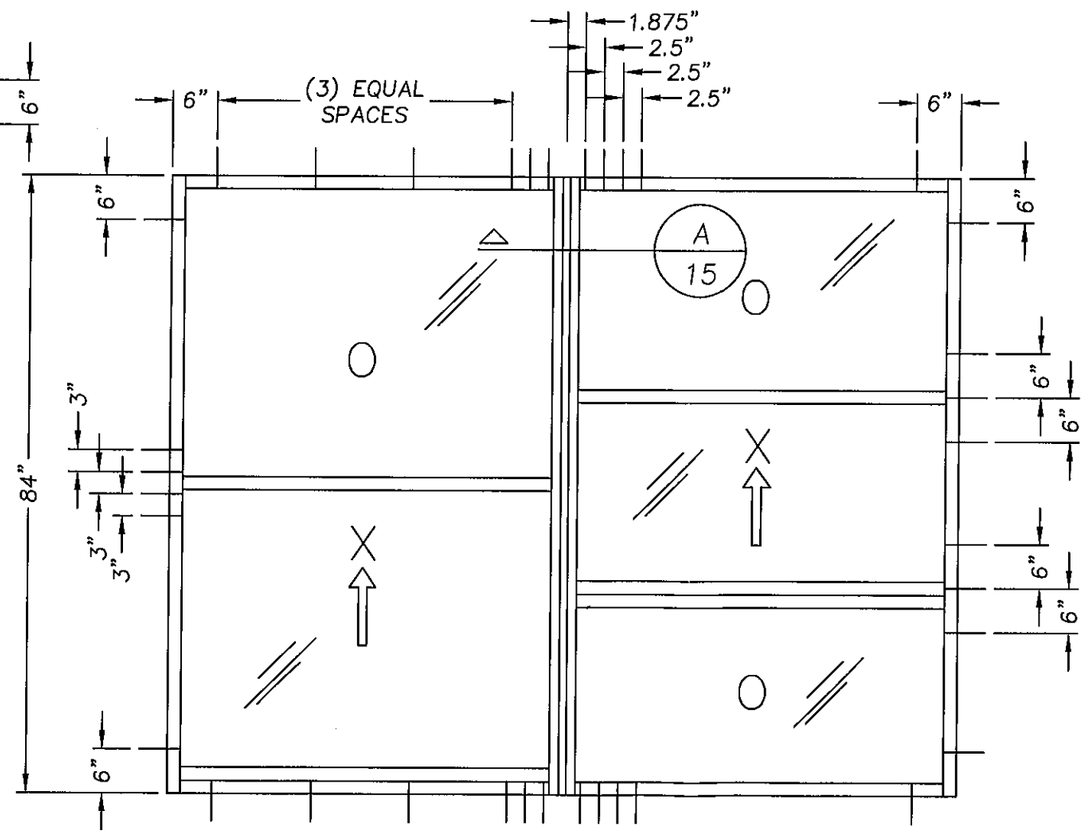

MULTIPLE WINDOW SYSTEM 2 LITE AND/OR 3-LITE
DESIGN PRESSURE +78.23 PSF / −87.78 PSF

PRODUCT REVISED
as complying with the Florida Building Code
Acceptance No. 09-0428.04
Expiration Date SEPT. 2, 2014
By Manuel Perez
Miami-Dade Product Control Division

Documents Prepared By:
RW BUILDING CONSULTANTS, INC.
P.O. Box 230 Valrico FL 33595
Phone No.: 813.659.9197
Florida Board of Professional Engineers
Certificate Of Authorization No. 9813
Lyndon F. Schmidt, P.E. No. 43409
8-25-07

PRODUCT:
SERIES '275' SINGLE HUNG
TAS 201 – 203
SMALL MISSILE

PART OR ASSEMBLY:
84" 2-Lite & 3-Lite Sgl & Twin
#24g Wood Screws

REVISIONS

NO.	DATE		BY
3	4/21/09	REVISE TO 2007 FBC	AL
2	8/10/07	REVISE PER DADE REQUEST	YV
1	7/17/07	REVISE PER DADE LETTER	WH

DATE: 04/25/06
SCALE: N.T.S.
DWG. BY: EW
CHK. BY: LFS
DRAWING NO.: S-2667
SHEET 15 OF 17

© 2009 R.W. BUILDING CONSULTANTS INC.

R:\A - Projects\Project Folders\Proj 901 - 1000\01953\PF ORIGINAL\S-2667\S-2667 R5.dwg, 15

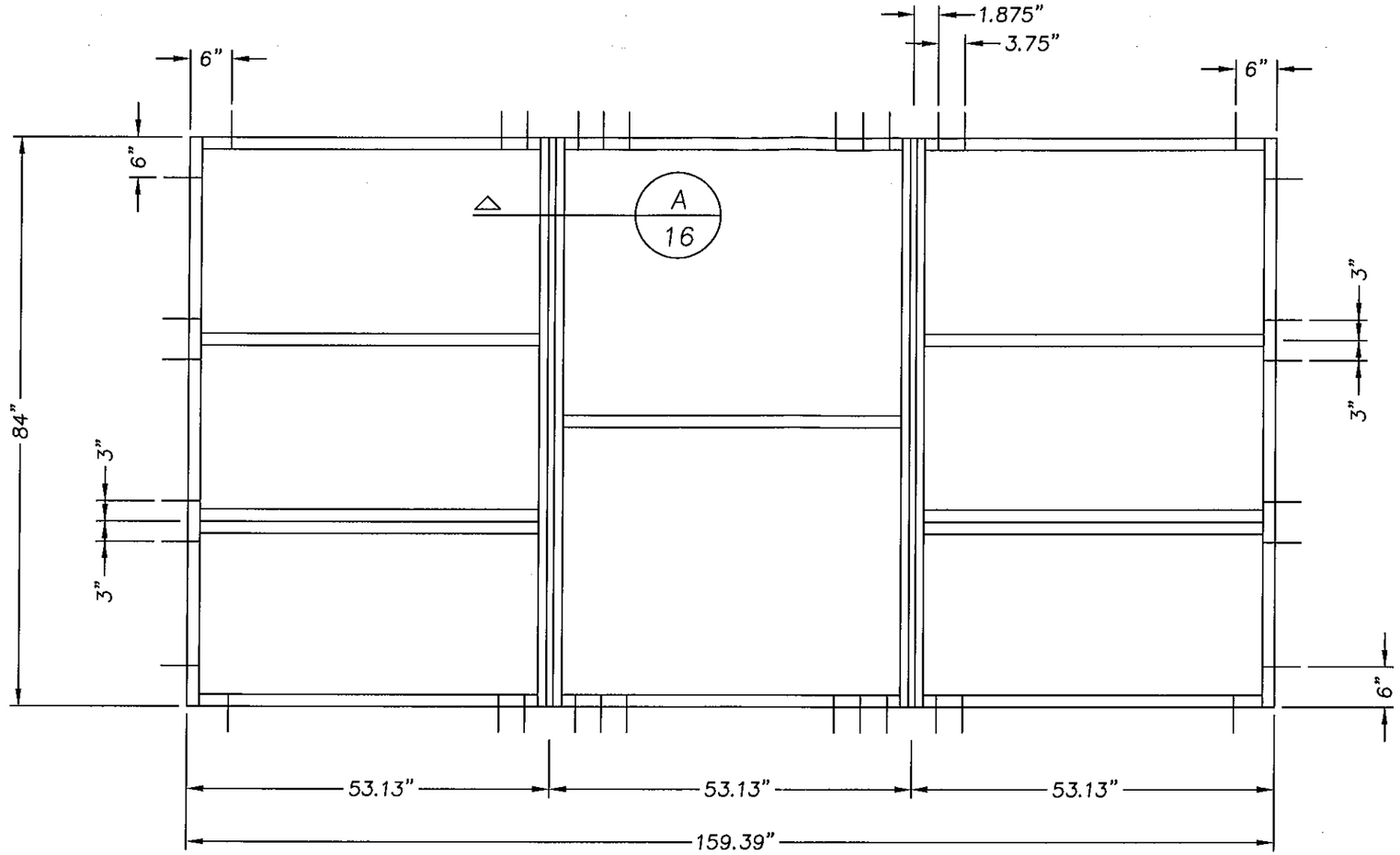

MULTIPLE WINDOW SYSTEM 2 LITE AND/OR 3-LITE
DESIGN PRESSURE +78.23 PSF / -87.78 PSF

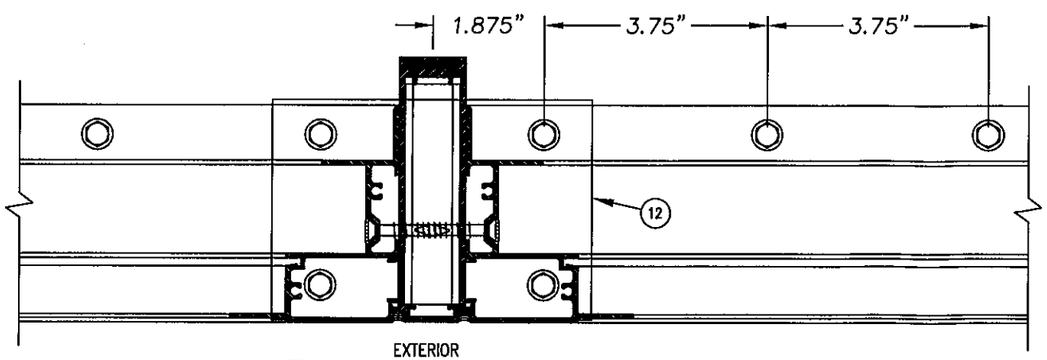

A / 16 ANCHORING AT MULLION
SASH AND GLASS REMOVED FOR CLARITY

APPROVED ANCHORS
5/16" ITW TAPCON

PRODUCT REVISED
as complying with the Florida Building Code
Acceptance No. 09-0428.04
Expiration Date SEPT. 2, 2014
By Manuel Sosa
Miami Dade Product Control Division

Documents Prepared By:
R W BUILDING CONSULTANTS, INC.
P.O. Box 230 Valrico FL 33595
Phone No.: 813.659.9197
Florida Board of Professional Engineers
Certificate Of Authorization No. 9813
Lyndon F. Schmidt, P.E. No. 43409
9-25-09

PRODUCT:
SERIES '275' SINGLE HUNG
TAS 201 - 203
SMALL MISSILE

PART OR ASSEMBLY:
84" 2-Lite & 3-Lite Multi-unit
5/16" Concrete Screws

NO.	DATE	BY
3	4/21/09	REVISE TO 2007 FBC	AL
2	8/10/07	REVISE PER DADE REQUEST	YV
1	7/17/07	REVISE PER DADE LETTER	WH

REVISIONS

DATE: 04/25/06
SCALE: N.T.S.
DWG. BY: EW
CHK. BY: LFS
DRAWING NO.: S-2667
SHEET 16 OF 17

© 2009 R.W. BUILDING CONSULTANTS INC.

R:\A - Projects\Project Folders\Proj 901 - 1000\p1953\PF ORIGINAL\S-2667\S-2667 R3.dwg, 16

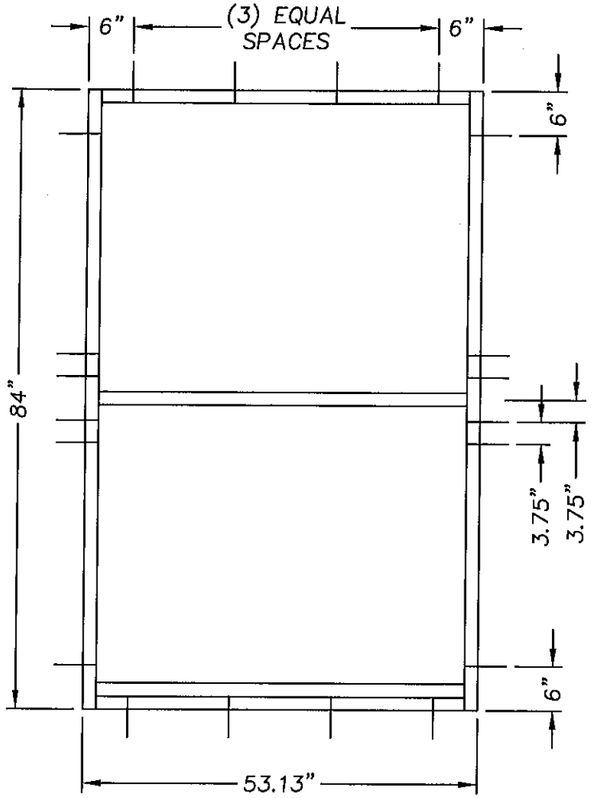

2 LITE SINGLE HUNG
DESIGN PRESSURE
+100 PSF / −120 PSF

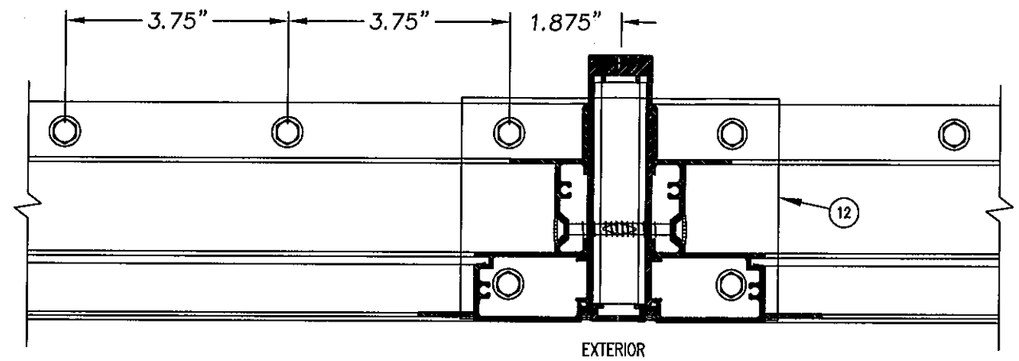

A / 17 ANCHORING AT MULLION
SASH AND GLASS REMOVED FOR CLARITY

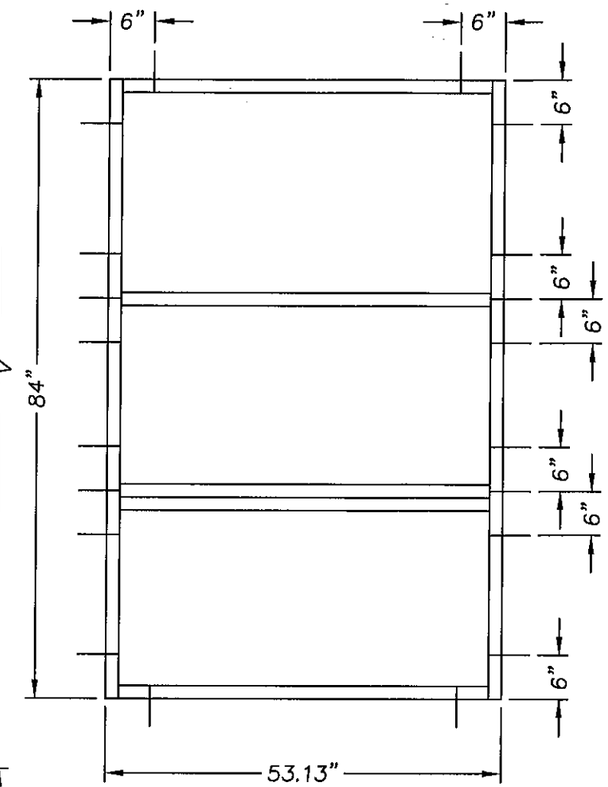

3 LITE SINGLE HUNG
DESIGN PRESSURE
+100 PSF / −120 PSF

APPROVED ANCHORS
5/16" ITW TAPCON

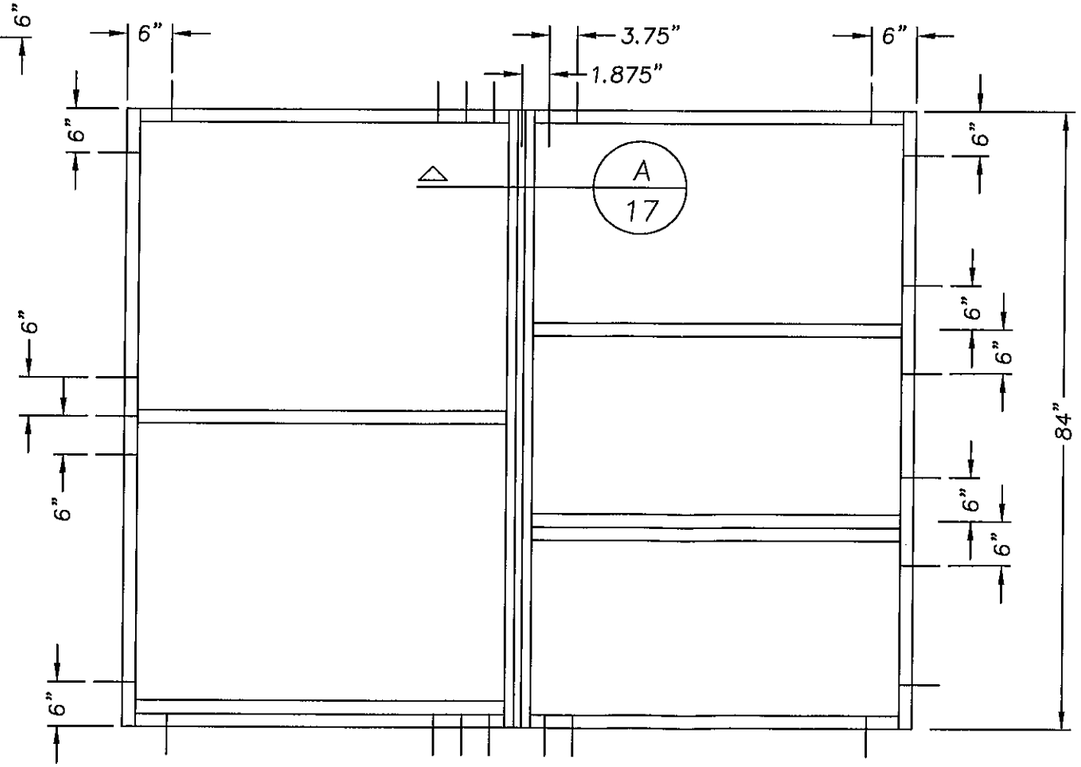

MULTIPLE WINDOW SYSTEM 2 LITE AND/OR 3-LITE
DESIGN PRESSURE +78.23 PSF / −87.78 PSF

PRODUCT REVISED
as complying with the Florida Building Code
Acceptance No. 09-0428.04
Expiration Date SEPT. 2, 2014
By Manuel Perez
Miami-Dade Product Control Division

Documents Prepared By:
R.W. BUILDING-CONSULTANTS, INC.
P.O. Box 230 Valrico FL 33595
Phone No.: 813.659.9197
Florida Board of Professional Engineers
Certificate Of Authorization No. 9813
Lyndon F. Schmidt, P.E. No. 43409

PRODUCT: SERIES '275' SINGLE HUNG TAS 201 – 203 SMALL MISSILE

PART OR ASSEMBLY: 84" 2-Lite & 3-Lite Sgl & Twin 5/16" Concrete Screws

NO.	DATE	BY
3	4/21/09	AL
2	8/10/07	YV
1	7/17/07	WH

REVISIONS
REVISE TO 2007 FBC
REVISE PER DADE REQUEST
REVISE PER DADE LETTER

DATE: 04/25/06
SCALE: N.T.S.
DWG. BY: EW
CHK. BY: LFS
DRAWING NO.: S-2667
SHEET 17 OF 17

© 2009 R.W. BUILDING CONSULTANTS INC.

R:\A - Projects\Project Folders\Proj 901 - 1000\p0953\PF ORIGINAL\S-2667\S-2667 R3.dwg, 17