MIAMI-DADE COUNTY
BUILDING CODE COMPLIANCE OFFICE (BCCO)
PRODUCT CONTROL DIVISION

**MIAMI-DADE** COUNTY, FLORIDA
METRO-DADE FLAGLER BUILDING
**140 WEST FLAGLER STREET, SUITE 1603**
MIAMI, FLORIDA 33130-1563
(305) 375-2901 FAX (305) 375-2908
**www.miamidade.gov/buildingcode**

# NOTICE OF ACCEPTANCE (NOA)

**WinDoor, Incorporated**
**7500 Amsterdam drive**
**Orlando, Florida, 32832**

## SCOPE:

This NOA is being issued under the applicable rules and regulations governing the use of construction materials. The documentation submitted has been reviewed by Miami-Dade County Product Control Division and accepted by the Board of Rules and Appeals (BORA) to be used in Miami Dade County and other areas where allowed by the Authority Having Jurisdiction (AHJ).

This NOA shall not be valid after the expiration date stated below. The Miami-Dade County Product Control Division (In Miami Dade County) and/or the AHJ (in areas other than Miami Dade County) reserve the right to have this product or material tested for quality assurance purposes. If this product or material fails to perform in the accepted manner, the manufacturer will incur the expense of such testing and the AHJ may immediately revoke, modify, or suspend the use of such product or material within their jurisdiction. BORA reserves the right to revoke this acceptance, if it is determined by Miami-Dade County Product Control Division that this product or material fails to meet the requirements of the applicable building code.

This product is approved as described herein, and has been designed to comply with the Florida Building Code, including High Velocity Hurricane Zone of the Florida Building Code.

**DESCRIPTION: Series "7000" Aluminum Sliding Glass Door W/WO Reinforcements**

**APPROVAL DOCUMENT:** Drawing No. **08-00638,** titled "7000 Series SGD-LMI", sheets 1 through 18 of 18, prepared by manufacturer, dated 11/11/08 and last revised on 04/16/10, signed and sealed by Luis R. Lomas, P.E., bearing the Miami-Dade County Product Control approval stamp with the Notice of Acceptance number and approval date by the Miami-Dade County Product Control Division.

**MISSILE IMPACT RATING: Large and Small Missile Impact Resistant**

**Limitation:**

1. **Hook strip installation**: Requires ¼" ITW Tapcon w/ 1-1/4" embedment & 2-1/2" edge distance. For installation into Wood requires #14 wood screws w/ 1-3/8" embedment & 5/8" edge distance. **See sheet 16**.
2. See Design Pressure **table #1 (Non-reinforced)** and **tables #2 & #3 (Reinforced)** in sheet 3.

**LABELING:** Each unit shall bear a permanent label with the manufacturer's name or logo, city, state and following statement: "Miami-Dade County Product Control Approved", unless otherwise noted herein.

**RENEWAL** of this NOA shall be considered after a renewal application has been filed and there has been no change in the applicable building code negatively affecting the performance of this product.

**TERMINATION** of this NOA will occur after the expiration date or if there has been a revision or change in the materials, use, and/or manufacture of the product or process. Misuse of this NOA as an endorsement of any product, for sales, advertising or any other purposes shall automatically terminate this NOA. Failure to comply with any section of this NOA shall be cause for termination and removal of NOA.

**ADVERTISEMENT:** The NOA number preceded by the words Miami-Dade County, Florida, and followed by the expiration date may be displayed in advertising literature. If any portion of the NOA is displayed, then it shall be done in its entirety.

**INSPECTION:** A copy of this entire NOA shall be provided to the user by the manufacturer or its distributors and shall be available for inspection at the job site at the request of the Building Official.
This NOA consists of this page 1 and evidence page E-1, as well as approval document mentioned above.
The submitted documentation was reviewed by **Ishaq I. Chanda, P.E.**

MIAMI-DADE COUNTY APPROVED

5/13/10

**WinDoor, Incorporated**

## NOTICE OF ACCEPTANCE: EVIDENCE SUBMITTED

**A. DRAWINGS**

1. Manufacturer's die drawings and sections.
2. Drawing No. **08-00638,** titled "7000 Series SGD-LMI", sheets 1 through 18 of 18, prepared by manufacturer, dated 11/11/08 and last revised on 04/16/10, signed and sealed by Luis R. Lomas, P.E.

**B. TESTS**

1. Test reports on 1) Air Infiltration Test, per FBC, TAS 202-94
   2) Uniform Static Air Pressure Test, Loading per FBC, TAS 202-94
   3) Water Resistance Test, per FBC, TAS 202-94
   4) Forced Entry Test, per FBC 2411 3.2.1 and TAS 202-94
   5) Large Missile impact Test per FBC, TAS 201-94
   6) Cyclic Wind Pressure Loading per FBC, TAS 203-94

Along with marked-up drawings and installation diagram of Aluminum Sliding Glass, prepared by National Certified Testing Laboratories Inc, Test Report No. **NCTL-210-3533-2**, dated 03/25/09, signed & sealed by Gerald J, Ferrara, P.E.

**C. CALCULATIONS**

1. Anchor verification calculations complying w/ FBC-2007, dated 05-14-09 and last revised on 04/20/10, prepared, signed and sealed by Luis R. Lomas, P.E.,
2. Glazing complies with ASTME-1300-02 &-04

**D. QUALITY ASSURANCE BY:**

1. Miami-Dade Building Code Compliance Office (BCCO).

**F. MATERIAL CERTIFICATIONS**

1. Notice of Acceptance No. **07-1116.04** issued to E.I. DuPont De Nemours & CO., Inc. for "DuPont SentryGlas ® Plus", expiring on 01/14/2012.
2. Notice of Acceptance No. **05-1208.02** issued to E.I. DuPont DeNemours, for "DuPont Butacite ® PVB", expiring on 12/11/2010.

**E. STATEMENTS**

1. Statement letters of conformance and "No financial interest", dated 05/14/ 2009, signed and sealed by Luis R. Lomas, P.E.
2. Statement of compliance, issued as part of the above referenced test report issued by National Certified Testing Laboratories.

**F. OTHER**

1. Test Proposals # **07-3931**, dated 04/31/2008 approved by BCCO.

Ishaq I. Chanda

**Ishaq I. Chanda, P.E.**
**Product Control Examiner**
**NOA No 09-0519.12**
**Expiration Date: June 02, 2015**
**Approval Date: June 02, 2010**

| REVISIONS | | | |
|---|---|---|---|
| REV | DESCRIPTION | DATE | APPROVED |
| C | PER DADE LETTER DATED DEC. 21, 2009 | 01/19/10 | R.L. |
| D | PER DADE LETTER DATED MAR. 24, 2010 | 04/07/10 | R.L. |

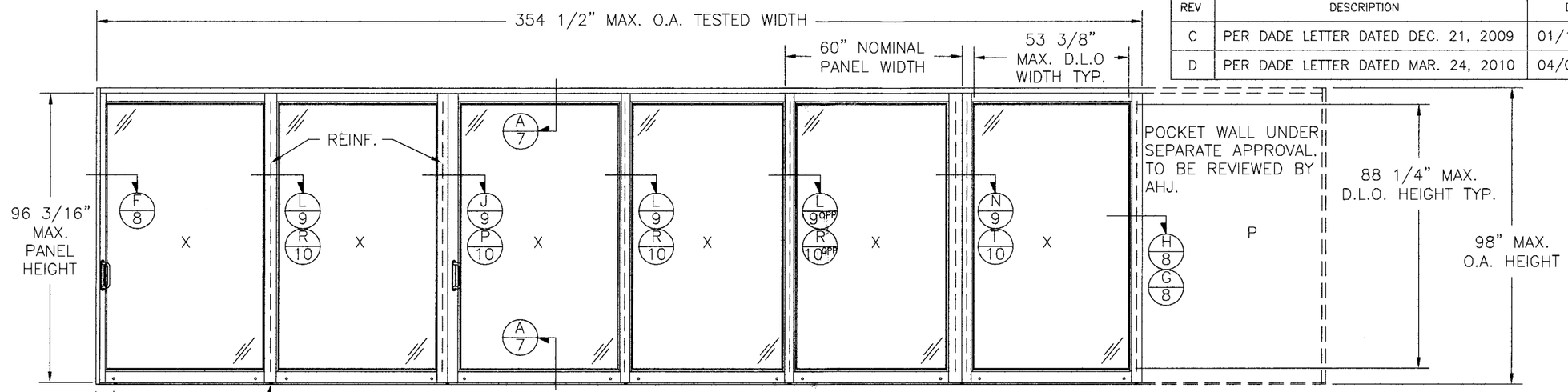


7000 SERIES LMI SGD (XXXXXXP)

TYPICAL ELEVATION EXTERIOR VIEW

(6) PANELS SHOWN. UNLIMITED NUMBER OF PANELS IN UNLIMITED CONFIGURATIONS IS APPLICABLE AS LONG AS INDIVIDUAL PANEL SIZE DOES NOT EXCEED MAXIMUM PANEL SIZE AND USE VERTICAL CONDITIONS AS SHOWN.

PANEL AND D.L.O. FORMULA
PANEL HEIGHT = UNIT HEIGHT – 1 9/16"
D.L.O. HEIGHT = PANEL HEIGHT – 7.9375"
D.L.O. WIDTH = PANEL WIDTH – 6.625"

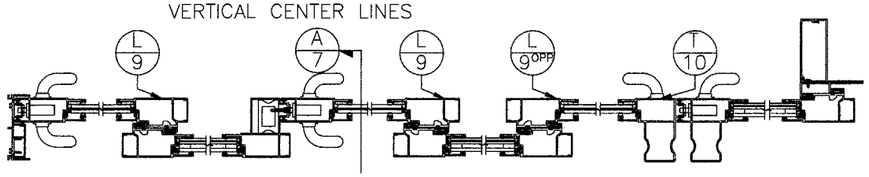


7000 SERIES LMI NON-REINFORCED SGD

2 TRACK LAYOUT

NON-REINFORCED

| DESIGN PRESSURE RATING | IMPACT RATING |
|---|---|
| ±45PSF WITH SILL ITEMS 3, 8 & 13 | LARGE MISSILE IMPACT |

FOR ADDITIONAL SIZES SEE CHARTS SHEET 3

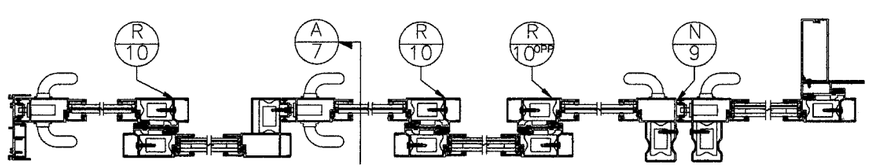


7000 SERIES LMI REINFORCED SGD

2 TRACK LAYOUT

REINFORCED

| DESIGN PRESSURE RATING | IMPACT RATING |
|---|---|
| ±60PSF WITH SILL ITEMS 4, 9 & 14 | LARGE MISSILE IMPACT |

FOR ADDITIONAL SIZES SEE CHARTS SHEET 3

NOTES:

1) THE PRODUCT SHOWN HEREIN IS DESIGNED AND MANUFACTURED TO COMPLY WITH REQUIREMENTS OF THE CURRENT FLORIDA BUILDING CODE.
2) WOOD FRAMING/2X BUCK, 20 GA. 2X WOOD BACKED STEEL STUD OR MASONRY/CONCRETE OPENING TO BE DESIGNED AND ANCHORED TO PROPERLY TRANSFER ALL LOADS TO STRUCTURE. WOOD FRAMING/2X BUCK, 20 GA. 2X WOOD BACKED STEEL STUD OR MASONRY/CONCRETE OPENING IS THE RESPONSIBILITY OF THE ARCHITECT OR ENGINEER OF RECORD.
3) ALLOWABLE STRESS INCREASE OF 1/3 WAS NOT USED IN THE DESIGN OF THE PRODUCT SHOWN HEREIN. WIND LOAD DURATION FACTOR Cd=1.6 WAS USED FOR WOOD ANCHOR CALCULATIONS.
4) FRAME AND PANEL MATERIAL: ALUMINUM 6063-T6
5) UNITS MUST BE GLAZED WITH LARGE MISSILE IMPACT SINGLE LAMINATED OR INSULATED LAMINATED GLASS AS SHOWN IN GLAZING DETAILS ON SHEET 6, COMPLYING WITH ASTM E1300-02 AND 04.
6) APPROVED IMPACT PROTECTIVE SYSTEM IS NOT REQUIRED FOR THIS PRODUCT IN AREAS WHERE WIND BORNE DEBRIS PROTECTION IS REQUIRED.
7) APPROVED TO BE INSTALLED ON A 2 TRACK, 3 TRACK OR 4 TRACK FRAME SYSTEM WITH OR WITHOUT POCKETS.

TABLE OF CONTENTS


| SHEET NO. | DESCRIPTION |
|---|---|
| 1 | ELEVATION, HORIZONTAL CROSS SECTIONS AND NOTES |
| 2 – 3 | ELEVATION AND HORIZONTAL CROSS SECTIONS |
| 4 | ANCHORING LAYOUT AND NOTES |
| 5 | BILL OF MATERIALS |
| 6 | GLAZING DETAILS |
| 7 – 12 | CROSS SECTIONS |
| 13 – 16 | INSTALLATION DETAILS |
| 17 – 18 | COMPONENTS |


Approved as complying with the Florida Building Code
Date June 2, 2010
NOAA 09-0519.12
Minimum Plans Accepted Contract
Division
By Ishaq I. Chand


WinDoor INCORPORATED
7500 AMSTERDAM DRIVE
ORLANDO, FL 32832
Phone: 407.481.8400
Fax: 407.481.0505
www.windoorinc.com


7000 SERIES LMI REINFORCED & NON-REINFORCED (5'0 x 8'2 PANEL) ELEVATION, HORIZONTAL CROSS SECTIONS AND NOTES

| DRAWN: | DWG NO. | REV |
|---|---|---|
| TJH | 08-00638 | D |

SCALE NTS | DATE 12/10/08 | SHEET 1 OF 18

Luis R. Lomas
4/16/10

Luis R. Lomas P.E.
Florida No. 62514

| REVISIONS | | | |
|---|---|---|---|
| REV | DESCRIPTION | DATE | APPROVED |
| C | PER DADE LETTER DATED DEC. 21, 2009 | 01/19/10 | R.L. |
| D | PER DADE LETTER DATED MAR. 24, 2010 | 04/07/10 | R.L. |

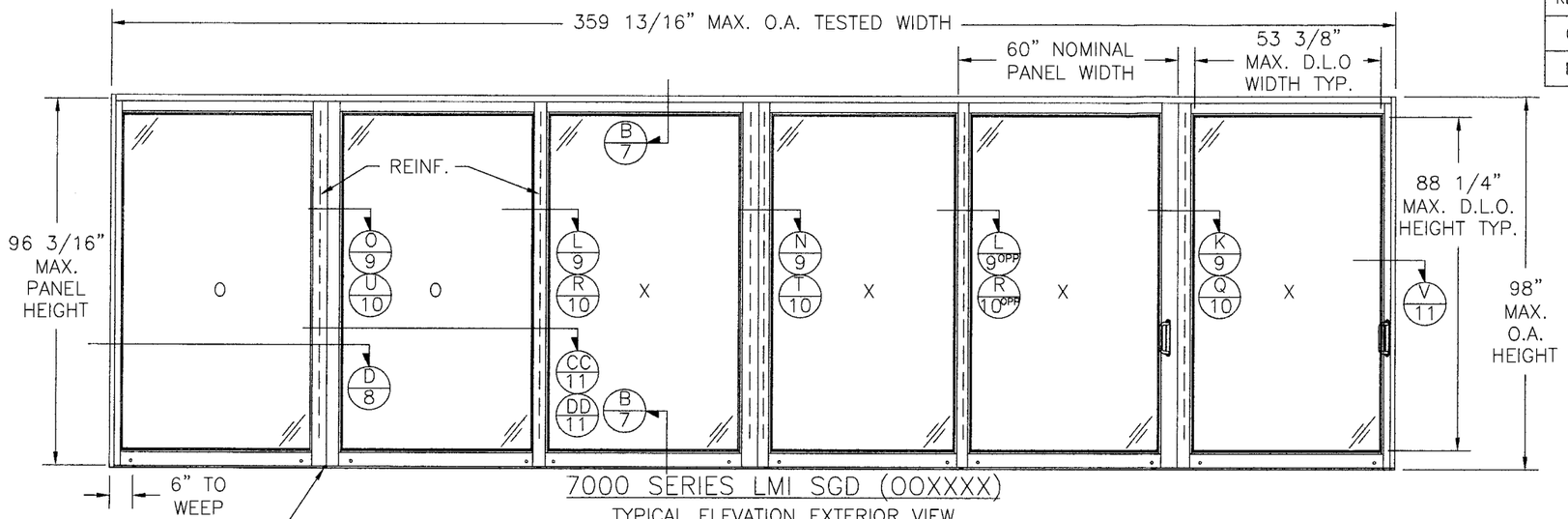


7000 SERIES LMI SGD (OOXXXX)

TYPICAL ELEVATION EXTERIOR VIEW

(6) PANELS SHOWN. UNLIMITED NUMBER OF PANELS IN UNLIMITED CONFIGURATIONS IS APPLICABLE AS LONG AS INDIVIDUAL PANEL SIZE DOES NOT EXCEED MAXIMUM PANEL SIZE AND USE VERTICAL CONDITIONS AS SHOWN.

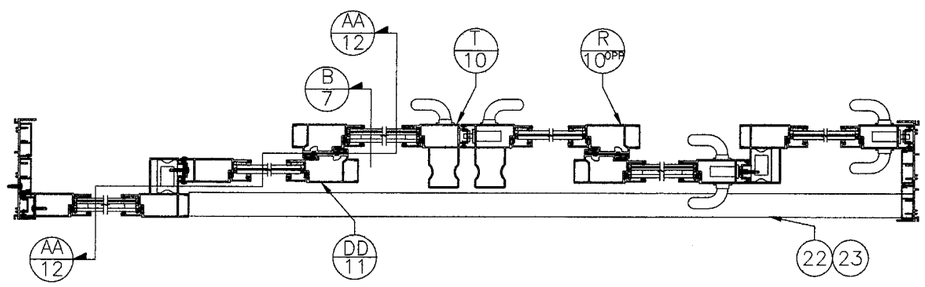


7000 SERIES LMI NON-REINFORCED SGD

3 TRACK LAYOUT

NON-REINFORCED

| DESIGN PRESSURE RATING | IMPACT RATING |
|---|---|
| ±45PSF | LARGE MISSILE IMPACT |

FOR ADDITIONAL SIZES SEE CHARTS SHEET 3

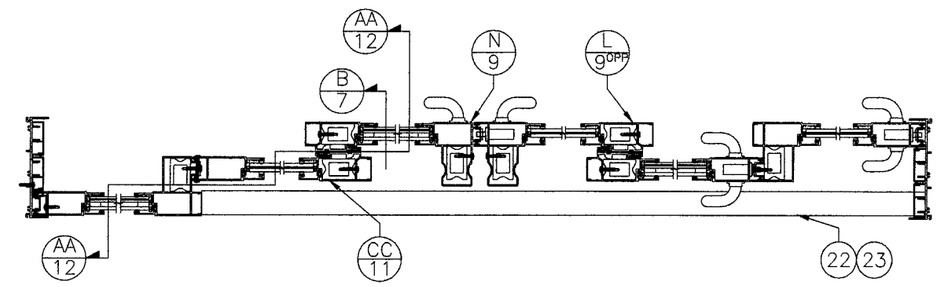


7000 SERIES LMI REINFORCED SGD

3 TRACK LAYOUT

REINFORCED

| DESIGN PRESSURE RATING | IMPACT RATING |
|---|---|
| ±60PSF | LARGE MISSILE IMPACT |

FOR ADDITIONAL SIZES SEE CHARTS SHEET 3

Approved as complying with the Florida Building Code
Date JUNE 2, 2010
NOA# 09-0519.12
Miami Dade Product Control Division
By Ishaq I. Chanda


WinDoor INCORPORATED
7500 AMSTERDAM DRIVE
ORLANDO, FL 32832
Phone: 407.481.8400
Fax: 407.481.0505
www.windoorinc.com


7000 SERIES LMI REINFORCED & NON-REINFORCED (5'0 x 8'2 PANEL) ELEVATION AND HORIZONTAL CROSS SECTIONS

| DRAWN: | DWG NO. | REV |
|---|---|---|
| TJH | 08-00638 | D |

| SCALE | DATE | SHEET |
|---|---|---|
| NTS | 12/10/08 | 2 OF 18 |

Luis R. Lomas
4/16/10

Luis R. Lomas P.E.
Florida No. 62514

| REVISIONS | | | |
|---|---|---|---|
| REV | DESCRIPTION | DATE | APPROVED |
| C | PER DADE LETTER DATED DEC. 21, 2009 | 01/19/10 | R.L. |
| D | PER DADE LETTER DATED MAR. 24, 2010 | 04/07/10 | R.L. |

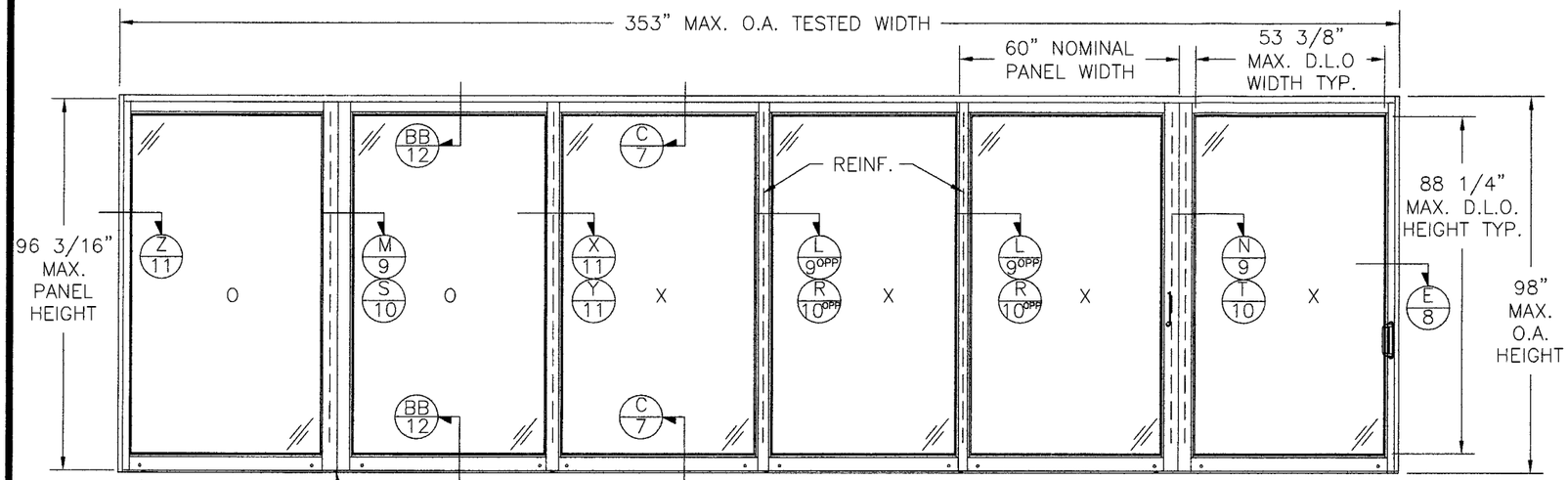


7000 SERIES LMI SGD (OOXXXX)

TYPICAL ELEVATION EXTERIOR VIEW

(6) PANELS SHOWN. UNLIMITED NUMBER OF PANELS IN UNLIMITED CONFIGURATIONS IS APPLICABLE AS LONG AS INDIVIDUAL PANEL SIZE DOES NOT EXCEED MAXIMUM PANEL SIZE AND USE VERTICAL CONDITIONS AS SHOWN.

***Maximum design pressure capacity chart 1***

***7000 Series Large Missile Impact Non-Rein. SGD - 5'0 x 8'2 panels with 2 1/2" high sill riser with items 3, 8 & 13***

| Height | Single Panel Width (in) | | | | | | | | | | | | | |
|---|---|---|---|---|---|---|---|---|---|---|---|---|---|---|
| | 24.0 | | 30.0 | | 36.0 | | 42.0 | | 48.0 | | 54.0 | | 60.0 | |
| (in) | Pos | Neg | Pos | Neg | Pos | Neg | Pos | Neg | Pos | Neg | Pos | Neg | Pos | Neg |
| 80.0 | 60.0 | 60.0 | 60.0 | 60.0 | 60.0 | 60.0 | 60.0 | 60.0 | 60.0 | 60.0 | 60.0 | 60.0 | 60.0 | 60.0 |
| 84.0 | 60.0 | 60.0 | 60.0 | 60.0 | 60.0 | 60.0 | 60.0 | 60.0 | 60.0 | 60.0 | 59.6 | 59.6 | 56.7 | 56.7 |
| 96.0 | 60.0 | 60.0 | 60.0 | 60.0 | 60.0 | 60.0 | 58.3 | 58.3 | 53.1 | 53.1 | 49.3 | 49.3 | 46.4 | 46.4 |
| 98.0 | 60.0 | 60.0 | 60.0 | 60.0 | 60.0 | 60.0 | 56.8 | 56.8 | 51.7 | 51.7 | 47.9 | 47.9 | 45.0 | 45.0 |

***Maximum design pressure capacity chart 2***

***7000 Series Large Missile Impact Reinforced SGD - 5'0 x 8'2 panels with 2 1/2" high sill riser with items 3, 8 & 13***

| Height | Single Panel Width (in) | | | | | | | | | | | | | |
|---|---|---|---|---|---|---|---|---|---|---|---|---|---|---|
| | 24.0 | | 30.0 | | 36.0 | | 42.0 | | 48.0 | | 54.0 | | 60.0 | |
| (in) | Pos | Neg | Pos | Neg | Pos | Neg | Pos | Neg | Pos | Neg | Pos | Neg | Pos | Neg |
| 80.0 | 60.0 | 75.0 | 60.0 | 75.0 | 60.0 | 75.0 | 60.0 | 75.0 | 60.0 | 75.0 | 60.0 | 75.0 | 60.0 | 75.0 |
| 84.0 | 60.0 | 75.0 | 60.0 | 75.0 | 60.0 | 75.0 | 60.0 | 75.0 | 60.0 | 75.0 | 59.6 | 75.0 | 56.7 | 75.0 |
| 96.0 | 60.0 | 75.0 | 60.0 | 75.0 | 60.0 | 75.0 | 58.3 | 75.0 | 53.1 | 70.8 | 49.3 | 65.7 | 46.4 | 61.8 |
| 98.0 | 60.0 | 75.0 | 60.0 | 75.0 | 60.0 | 75.0 | 56.8 | 75.0 | 51.7 | 68.9 | 47.9 | 63.8 | 45.0 | 60.0 |

***Maximum design pressure capacity chart 3***

***7000 Series Large Missile Impact Reinforced SGD - 5'0 x 8'2 panels with 3 1/8" high sill riser with items 4,9 & 14***

| Height | Single Panel Width (in) | | | | | | | | | | | | | |
|---|---|---|---|---|---|---|---|---|---|---|---|---|---|---|
| | 24.0 | | 30.0 | | 36.0 | | 42.0 | | 48.0 | | 54.0 | | 60.0 | |
| (in) | Pos | Neg | Pos | Neg | Pos | Neg | Pos | Neg | Pos | Neg | Pos | Neg | Pos | Neg |
| 80.0 | 75.0 | 75.0 | 75.0 | 75.0 | 75.0 | 75.0 | 75.0 | 75.0 | 75.0 | 75.0 | 75.0 | 75.0 | 75.0 | 75.0 |
| 84.0 | 75.0 | 75.0 | 75.0 | 75.0 | 75.0 | 75.0 | 75.0 | 75.0 | 75.0 | 75.0 | 75.0 | 75.0 | 75.0 | 75.0 |
| 96.0 | 75.0 | 75.0 | 75.0 | 75.0 | 75.0 | 75.0 | 75.0 | 75.0 | 70.8 | 70.8 | 65.7 | 65.7 | 61.8 | 61.8 |
| 98.0 | 75.0 | 75.0 | 75.0 | 75.0 | 75.0 | 75.0 | 75.0 | 75.0 | 68.9 | 68.9 | 63.8 | 63.8 | 60.0 | 60.0 |

DOOR HEIGHTS AND WIDTHS SHALL COMPLY WITH EGRESS REQUIREMENTS PER FBC

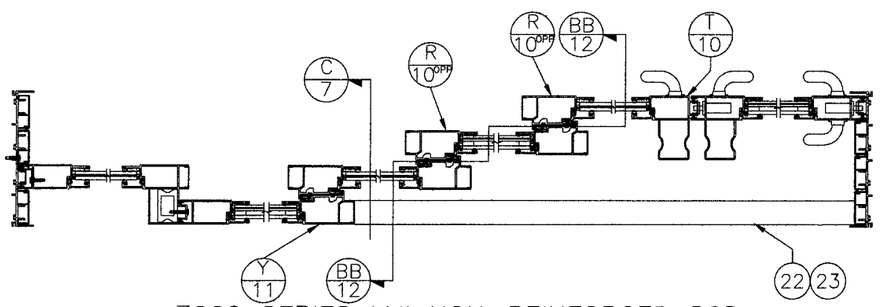


7000 SERIES LMI NON-REINFORCED SGD

4 TRACK LAYOUT

SEE CHART 1 FOR DESIGN PRESSURE RATING FOR OTHER SIZES

NON-REINFORCED

| DESIGN PRESSURE RATING | IMPACT RATING |
|---|---|
| ±45PSF | LARGE MISSILE IMPACT |

FOR ADDITIONAL SIZES SEE CHARTS ABOVE

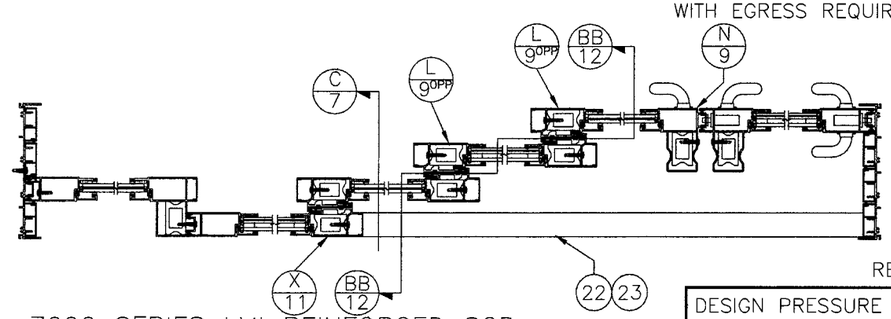


7000 SERIES LMI REINFORCED SGD

4 TRACK LAYOUT

SEE CHARTS 2 AND 3 FOR DESIGN PRESSURE RATING FOR OTHER SIZES

REINFORCED

| DESIGN PRESSURE RATING | IMPACT RATING |
|---|---|
| ±60PSF | LARGE MISSILE IMPACT |

FOR ADDITIONAL SIZES SEE CHARTS ABOVE

Approved as complying with the Florida Building Code
Date June 2, 2010
NOA# 09-0519.12
Miami Dade Product Control Division
By Shaq I. Chand

WinDoor INCORPORATED

7500 AMSTERDAM DRIVE
ORLANDO, FL 32832
Phone: 407.481.8400
Fax: 407.481.0505
www.windoorinc.com

7000 SERIES LMI REINFORCED & NON-REINFORCED (5'0 x 8'2 PANEL) ELEVATION AND HORIZONTAL CROSS SECTIONS

| DRAWN: | DWG NO. | REV |
|---|---|---|
| TJH | 08-00638 | D |

| SCALE | DATE | SHEET |
|---|---|---|
| NTS | 12/10/08 | 3 OF 18 |

Luis R. Lomas 4/16/10

Luis R. Lomas P.E.
Florida No. 62514

| REVISIONS | | | |
|---|---|---|---|
| REV | DESCRIPTION | DATE | APPROVED |
| C | PER DADE LETTER DATED DEC. 21, 2009 | 01/19/10 | R.L. |
| D | PER DADE LETTER DATED MAR. 24, 2010 | 04/07/10 | R.L. |

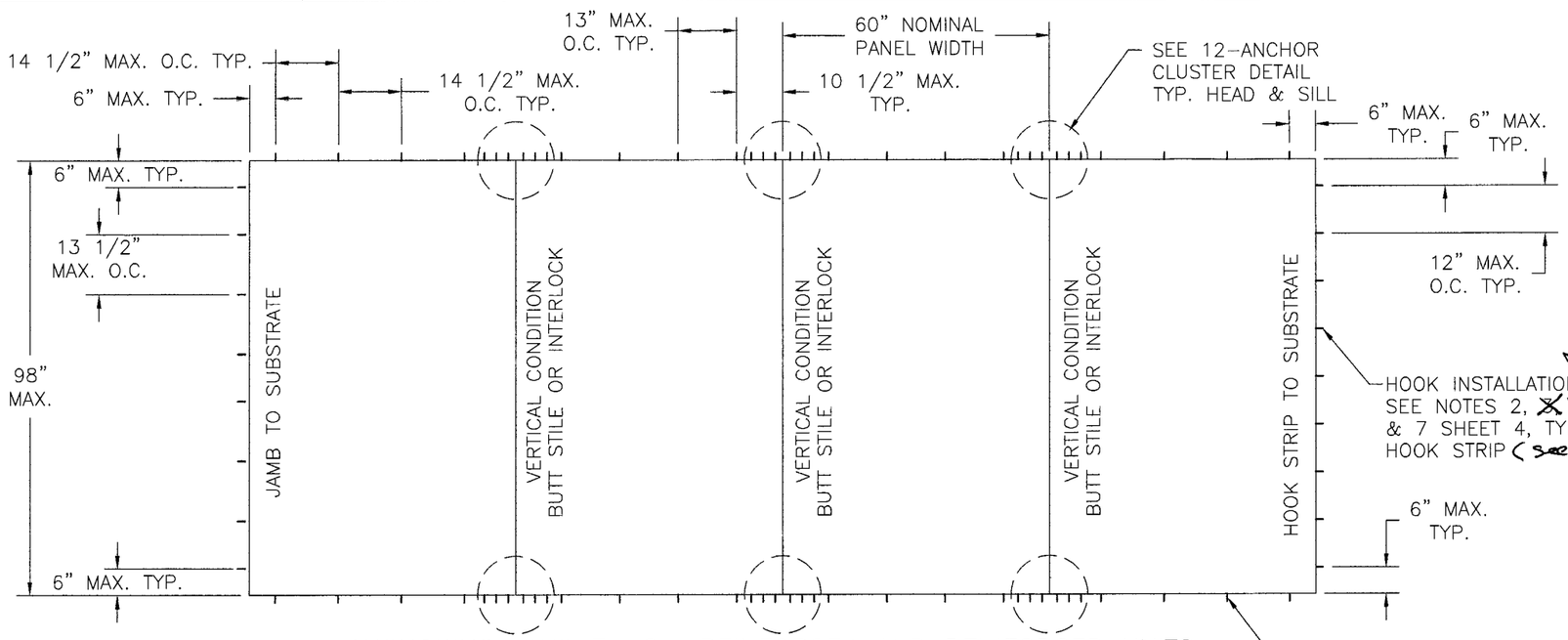


ANCHORING LAYOUT NON-REINFORCED AND REINFORCED UNITS
INSTALLATION 4PANEL UNIT SHOWN, APPLICABLE TO ALL CONFIGURATIONS USING SAME ANCHOR CLUSTER AND PATTERN

TWO (2) INSTALLATION ANCHORS PER LOCATION (EXCEPT HOOK STRIP) SEE NOTES 1, 3, 4, 5 & 6 SHEET 4, TYP. HEAD SILL AND JAMBS

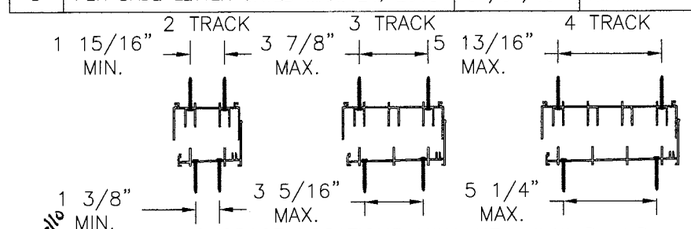


ANCHORAGE LOCATIONS NON-REINFORCED AND REINFORCED AT HEAD AND SILL. (FOR FURTHER DETAILS SEE SHEETS 13, 14 AND 15)

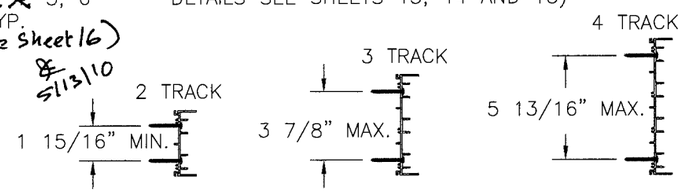


ANCHORAGE LOCATIONS NON-REINFORCED AND REINFORCED AT JAMBS. (FOR FURTHER DETAILS SEE SHEETS 13, 14 AND 15)

POCKET

ANCHORAGE LOCATIONS NON-REINFORCED AND REINFORCED AT HOOK STRIP. (FOR FURTHER DETAILS SEE SHEET 16)

ANCHORING NOTES:

1) ALL FRAME SYSTEMS, 2 TRACK, 3 TRACK AND 4 TRACK, HAVE TWO INSTALLATION ANCHORS AT EACH INSTALLATION ANCHOR LOCATION IN HEAD, SILL AND JAMBS.
2) ALL FRAME SYSTEMS, 2 TRACK, 3 TRACK AND 4 TRACK, HAVE ONE INSTALLATION ANCHOR AT EACH INSTALLATION ANCHOR LOCATION IN HOOK STRIP.
3) FOR ANCHORING INTO MASONRY/CONCRETE THROUGH A PROPERLY SECURED 1X NON-STRUCTURAL WOOD BUCK USE 3/16" ITW TAPCON WITH SUFFICIENT LENGTH TO ACHIEVE A 1 1/4" MINIMUM EMBEDMENT INTO SUBSTRATE WITH 2 1/2" MINIMUM EDGE DISTANCE AND 1 3/8" MINIMUM SEPARATION. LOCATE ANCHORS AS SHOWN IN ELEVATIONS AND INSTALLATION DETAILS.
4) FOR ANCHORING INTO WOOD FRAMING, 2X BUCK OR 2X WOOD BACKED 20 GA. MINIMUM STEEL STUD USE #10 GRADE 5 WOOD SCREW WITH SUFFICIENT LENGTH TO ACHIEVE A 1 3/8" MINIMUM EMBEDMENT INTO SUBSTRATE. LOCATE ANCHORS AS SHOWN IN ELEVATIONS AND INSTALLATION DETAILS.
5) SHIM AS REQUIRED AT EACH INSTALLATION ANCHOR WITH LOAD BEARING SHIM. SHIM WHERE SPACE OF 1/16" OR GREATER OCCURS. MAXIMUM ALLOWABLE LOAD BEARING SHIM TO BE 1/4".
6) ALL FASTENERS TO BE CORROSION RESISTANT.
7) INSTALLATION ANCHORS SHALL BE INSTALLED IN ACCORDANCE WITH ANCHOR MANUFACTURER'S INSTALLATION INSTRUCTIONS, AND ANCHORS SHALL NOT BE USED IN SUBSTRATES WITH STRENGTHS LESS THAN THE MINIMUM STRENGTH SPECIFIED BELOW:
   A. WOOD – MINIMUM SPECIFIC GRAVITY OF G=0.42
   B. CONCRETE – MINIMUM COMPRESSIVE STRENGTH OF 3,200 PSI.
   C. MASONRY – STRENGTH CONFORMANCE TO ASTM C-90, GRADE N, TYPE 1 (OR GREATER).
   D. METAL FRAMING – 20 GA (.040) MINIMUM THICKNESS (TO BE USED WITH WOOD FRAMING)

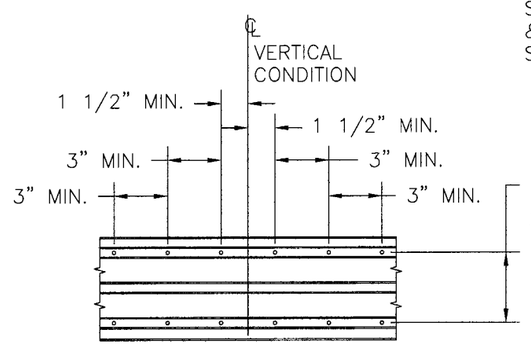


12-ANCHOR CLUSTER DETAIL
TYP. 2 TRACK, 3 TRACK AND 4 TRACK NON-REINFORCED AND REINFORCED AT HEAD & SILL (ANCHORAGE IN EXTERIOR TRACKS)

PANEL CONSTRUCTION:
ALL PANELS ARE CONSTRUCTED FROM EXTRUDED 6063-T6 ALUMINUM. VERTICAL STILES ARE NOTCHED TO RECEIVE HORIZONTAL RAILS. EACH RAIL IS SECURED TO STILES WITH (3) #10 x 1 1/4" SQ. DRIVE SCREW AT EACH END, B.O.M. ITEM #47. ALL PANELS HAVE A FIXED GLAZING STOP ON THE INTERIOR AND AN APPLIED GLAZING STOP ON THE EXTERIOR.

FRAME CONSTRUCTION:
EACH FRAME CORNER IS NOTCHED AND BUTTED. HEAD AND SILL ARE SECURED TO JAMBS WITH #7 x 1" TYPE F SCREW, B.O.M. ITEM #48, (2) AT EACH CORNER ON 2 TRACK FRAME, (3) AT EACH CORNER ON 3 TRACK FRAME AND (4) AT EACH CORNER ON 4 TRACK FRAME.

Approved as complying with the Florida Building Code
Date June 3, 2010
NOA# 09-0519.12
Miami Dade Product Control Division
By Shaq J. Chand


WinDoor INCORPORATED
7500 AMSTERDAM DRIVE
ORLANDO, FL 32832
Phone: 407.481.8400
Fax: 407.481.0505
www.windoorinc.com


7000 SERIES LMI REINFORCED & NON-REINFORCED (5'0 x 8'2 PANEL) ANCHORING LAYOUT AND NOTES

| DRAWN: TJH | DWG NO. 08-00638 | REV D |
|---|---|---|
| SCALE NTS | DATE 12/10/08 | SHEET 4 OF 18 |

Luis R. Lomas 4/16/10
Luis R. Lomas P.E.
Florida No. 52514

## PARTS LIST

| NO. | PART NUMBER | DESCRIPTION | MANUFACTURER | MATERIAL |
|---|---|---|---|---|
| 1 | FS-04522 | 2 TRACK FRAME HEAD | KEYMARK | ALUMINUM 6063-T6 |
| 2 | FS-04531 | 2 TRACK FRAME JAMB | KEYMARK | ALUMINUM 6063-T6 |
| 3 | FS-04525 | 2 TRACK SILL PAN W/2 1/2" RISER | KEYMARK | ALUMINUM 6063-T6 |
| 4 | FS-04526 | 2 TRACK SILL PAN W/3 1/8" RISER | KEYMARK | ALUMINUM 6063-T6 |
| 5 | FS-04529 | 2 TRACK FRAME SILL PAN INSERT | KEYMARK | ALUMINUM 6063-T6 |
| 6 | FS-04511 | 3 TRACK FRAME HEAD | KEYMARK | ALUMINUM 6063-T6 |
| 7 | FS-04510 | 3 TRACK FRAME JAMB | KEYMARK | ALUMINUM 6063-T6 |
| 8 | FS-04506 | 3 TRACK SILL PAN W/2 1/2" RISER | KEYMARK | ALUMINUM 6063-T6 |
| 9 | FS-04507 | 3 TRACK SILL PAN W/3 1/8" RISER | KEYMARK | ALUMINUM 6063-T6 |
| 10 | FS-04508 | 3 TRACK FRAME SILL PAN INSERT | KEYMARK | ALUMINUM 6063-T6 |
| 11 | FS-04523 | 4 TRACK FRAME HEAD | KEYMARK | ALUMINUM 6063-T6 |
| 12 | FS-04532 | 4 TRACK FRAME JAMB | KEYMARK | ALUMINUM 6063-T6 |
| 13 | FS-04527 | 4 TRACK SILL PAN W/2 1/2" RISER | KEYMARK | ALUMINUM 6063-T6 |
| 14 | FS-04528 | 4 TRACK SILL PAN W/3 1/8" RISER | KEYMARK | ALUMINUM 6063-T6 |
| 15 | FS-04530 | 4 TRACK FRAME SILL PAN INSERT | KEYMARK | ALUMINUM 6063-T6 |
| 16 | FS-04313 | FRAME HEAD TRACK COVER | KEYMARK | ALUMINUM 6063-T6 |
| 17 | FS-04501 | RECESSED JAMB TRACK COVER | KEYMARK | ALUMINUM 6063-T6 |
| 18 | FS-04509 | FLUSH JAMB COVER | KEYMARK | ALUMINUM 6063-T6 |
| 19 | FS-03684 | HOOK STRIP BASE | KEYMARK | ALUMINUM 6063-T6 |
| 20 | FS-04476 | HOOK STRIP WALL COVER | KEYMARK | ALUMINUM 6063-T6 |
| 21 | FS-04477 | HOOK STRIP WALL MOUNT | KEYMARK | ALUMINUM 6063-T6 |
| 22 | FS-04535 | PANEL STOP SILL COVER | KEYMARK | ALUMINUM 6063-T6 |
| 23 | FS-04332 | PANEL STOP HEAD COVER | KEYMARK | ALUMINUM 6063-T6 |
| 24 | FS-04631 | TOP AND BOTTOM RAIL | KEYMARK | ALUMINUM 6063-T6 |
| 25 | FS-04327 | PANEL LOCK/PLAIN STILE | KEYMARK | ALUMINUM 6063-T6 |
| 26 | FS-04516 | PANEL INTERLOCK STILE LEFT | KEYMARK | ALUMINUM 6063-T6 |
| 27 | FS-04515 | PANEL INTERLOCK STILE RIGHT | KEYMARK | ALUMINUM 6063-T6 |
| 28 | FS-04789 | MALE BUTT STILE | KEYMARK | ALUMINUM 6063-T6 |
| 29 | FS-04790 | LOCKING BUTT STILE | KEYMARK | ALUMINUM 6063-T6 |
| 30 | FS-04505 | INTERIOR FIXED BUTT STILE | KEYMARK | ALUMINUM 6063-T6 |
| 31 | FS-04504 | EXTERIOR FIXED BUTT STILE | KEYMARK | ALUMINUM 6063-T6 |
| 32 | FS-04503 | INTERLOCK REINF. BAR, FULL LENGTH | KEYMARK | ALUMINUM 6063-T6 |
| 33 | FS-04312 | BUTT STILE/INTERLOCK COVER | KEYMARK | ALUMINUM 6063-T6 |
| 34 | FS-04533 | 9/16" GLASS STOP | KEYMARK | ALUMINUM 6063-T6 |
| 35 | FS-04524 | 3/4" GLASS STOP | KEYMARK | ALUMINUM 6063-T6 |
| 36 | 5000 SS PDR | TANDEM ROLLER SS | | |
| 37 | 2186MI-INT | TRADITIONAL INTERNAL HANDLE | | |
| 38 | 2186MI-DM | TRADITIONAL EXTERIOR HANDLE | | |
| 39 | 7014 SS DLPA | DUAL POINT MORTISE LOCK SET | | |
| 40 | OW11023B0R750375 | RUBBER PANEL BUMPER | | |
| 41 | V-INT TP 876 | INTERLOCK BUMPER | | |
| 42 | | #8 x 1 1/4" SQ. DRIVE SCREW | | 18-8 STAINLESS |
| 43 | PJS-7623-09-SN | SCREEN ROLLER | SULLIVAN | |
| 44 | | GLAZING, SEE SHT. 6 FOR DETAILS | | |
| 45 | | #8 x 1/4" PH TYPE F SCREW | | STAINLESS STEEL |
| 46 | | #8 x 3/4" PH TEK SCREW | | 410 STAINLESS |
| 47 | | #10 x 1 1/4" SQ. DRIVE SCREW | | 18-8 STAINLESS |
| 48 | | #7 x 1" PH TYP F SCREW | | STAINLES STEEL |
| 49 | | #10 x 1" PH TEK SCREW | | ALUMINUM 6063-T6 |
| 50 | | #10 CUT THREAD WOOD SCREW | | |
| 51 | | 3/16" ITW TAPCON | ITW BUILDEX | CARBON STAINLESS |
| 52 | FH-02300 | WS SCREEN BOTTOM RAIL | KEYMARK | ALUMINUM 6063-T6 |
| 53 | FH-02300 | WS SCREEN TOP RAIL | KEYMARK | ALUMINUM 063-T6 |
| 54 | GS-VN-07A | 3/16" GLASS STOP VINYL | | VINYL |
| 55 | GS-VN-06A | 1/4" GLASS STOP VINYL | | VINYL |
| 56 | GS-VN-05A | 3/4" GLASS STOP VINYL & FIXED | | VINYL |
| 57 | FH-02395 | WS SCREEN STILE | KEYMARK | ALUMINUM 6063-T6 |
| 58 | W332217K0000 | .220" FIN WEATHERSTRIP | | |
| 59 | W234017K0000 | .400" FIN WEATHERSTRIP | | |
| 60 | W333517K0000 | .350" FIN WEATHERSTRIP | | |
| 61 | | GLASS SETTING BLOCK | | |
| 62 | SIKAFAST 552 | GLAZING COMPOUND | SIKA CORP. | POLYURETHANE |
| 63 | | SILICONE CAULK | PECORA | SILICONE |
| 64 | | WEEP COVER/GATE | | |
| 65 | | #8 x 3/8" PH TYPE F SCREW | | STAINLESS STEEL |
| 66 | | #8 x 3/4" PH TEX SCREW | | STAINLESS STEEL |
| 67 | FS-02209 | WS SCREEN SWEEP | KEYMARK | ALUMINUM 6063-T6 |
| 68 | SGD200 | SCREEN HANDLE & LOCK | SULIVAN | |
| 69 | | FIBERGLASS SCEEN MESH | | FIBERGLASS |
| 70 | | SCREEN SPLINE | | |
| 71 | | ALUMINUM 3/8" NOMINAL SPACER | HELIMA | ALUMINUM |
| 72 | FS-04791 | FIXED PANEL Z-CLIP | KEYMARK | ALUMINUM 6063-T6 |
| 73 | | #10 x 3/4" PPH TEK SCREW | | STAINLESS STEEL |

## REVISIONS

| REV | DESCRIPTION | DATE | APPROVED |
|---|---|---|---|
| C | PER DADE LETTER DATED DEC. 21, 2009 | 01/19/10 | R.L. |
| D | PER DADE LETTER DATED MAR. 24, 2010 | 04/07/10 | R.L. |

Approved as complying with the Florida Building Code
Date June 2, 2010
NOA# 09-0519.17
Miami Dade Product Control Division
By Shaq L. Chanda


WinDoor INCORPORATED
7500 AMSTERDAM DRIVE
ORLANDO, FL 32832
Phone: 407.481.8400
Fax: 407.481.0505
www.windoorinc.com


7000 SERIES LMI REINFORCED
& NON-REINFORCED (5'0 x 8'2 PANEL)
BILL OF MATERIALS

| DRAWN: | DWG NO. | REV |
|---|---|---|
| TJH | 08-00638 | D |
| SCALE NTS | DATE 12/10/08 | SHEET 5 OF 18 |

Luis R. Lomas 4/16/10

Luis R. Lomas P.E.
Florida No. 62514

| REVISIONS | | | |
|---|---|---|---|
| REV | DESCRIPTION | DATE | APPROVED |
| C | PER DADE LETTER DATED DEC. 21, 2009 | 01/19/10 | R.L. |
| D | PER DADE LETTER DATED MAR. 24, 2010 | 04/07/10 | R.L. |

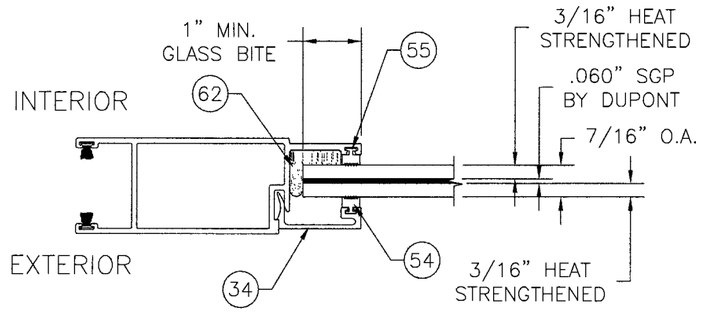


GLAZING TYPE A

7/16" LAMINATED HEAT STRENGTHENED W/.060" SGP BY DUPONT = CONSISTS OF 3/16" HS + .060" SGP BY DUPONT + 3/16" HS

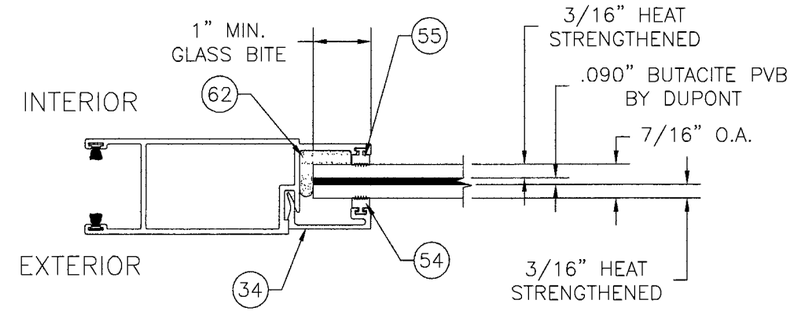


GLAZING TYPE B

7/16" (.465" NOMINAL) LAMINATED HEAT STRENGTHENED W/.090" BUTACITE PVB BY DUPONT = CONSISTS OF 3/16" HS + .090" BUTACITE PVB BY DUPONT + 3/16" HS

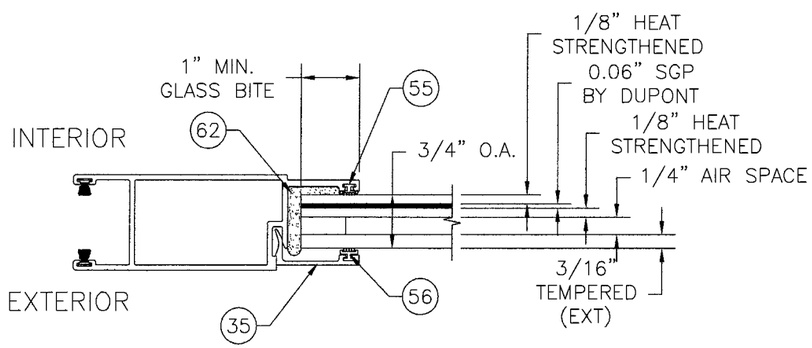


GLAZING TYPE C

3/4" I.G. TEMPERED/HEAT STRENGTHENED W/.060" SGP BY DUPONT = CONSISTS OF 3/16" TEMP EXT + 1/4" AIR + 1/8" HS + .060" SGP BY DUPONT + 1/8" HS

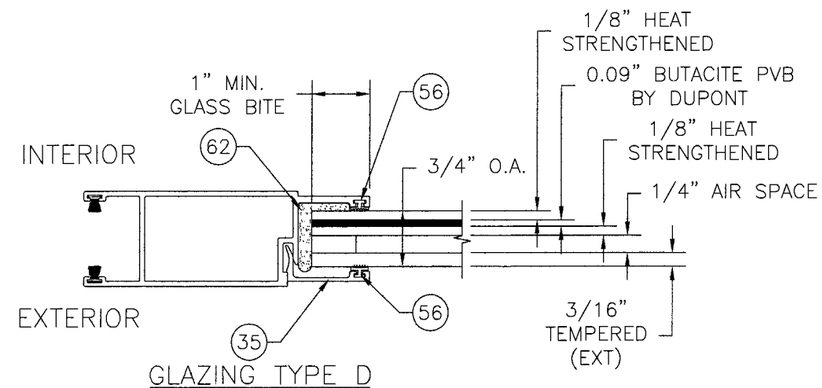


GLAZING TYPE D

3/4" I.G. TEMPERED/HEAT STRENGTHENED W/.090" BUTACITE PVB BY DUPONT = CONSISTS OF 3/16" TEMP EXT + 1/4" AIR + 1/8" HS + .090" BUTACITE PVB BY DUPONT + 1/8" HS

Approved as complying with the Florida Building Code
Date June 3, 2010
NOA# 09-0519.13
Miami Dade Product Control Division
By Ishaq I. Chanda


WinDoor INCORPORATED
7500 AMSTERDAM DRIVE
ORLANDO, FL 32832
Phone: 407.481.8400
Fax: 407.481.0505
www.windoorinc.com


7000 SERIES LMI REINFORCED & NON-REINFORCED (5'0 x 8'2 PANEL) GLAZING DETAILS

| DRAWN: | DWG NO. | REV |
|---|---|---|
| TJH | 08-00638 | D |
| SCALE NTS | DATE 12/10/08 | SHEET 6 OF 18 |

Luis R. Lomas
4/16/10

Luis R. Lomas P.E.
Florida No. 62514

| REVISIONS | | | |
|---|---|---|---|
| REV | DESCRIPTION | DATE | APPROVED |
| C | PER DADE LETTER DATED DEC. 21, 2009 | 01/19/10 | R.L. |
| D | PER DADE LETTER DATED MAR. 24, 2010 | 04/07/10 | R.L. |

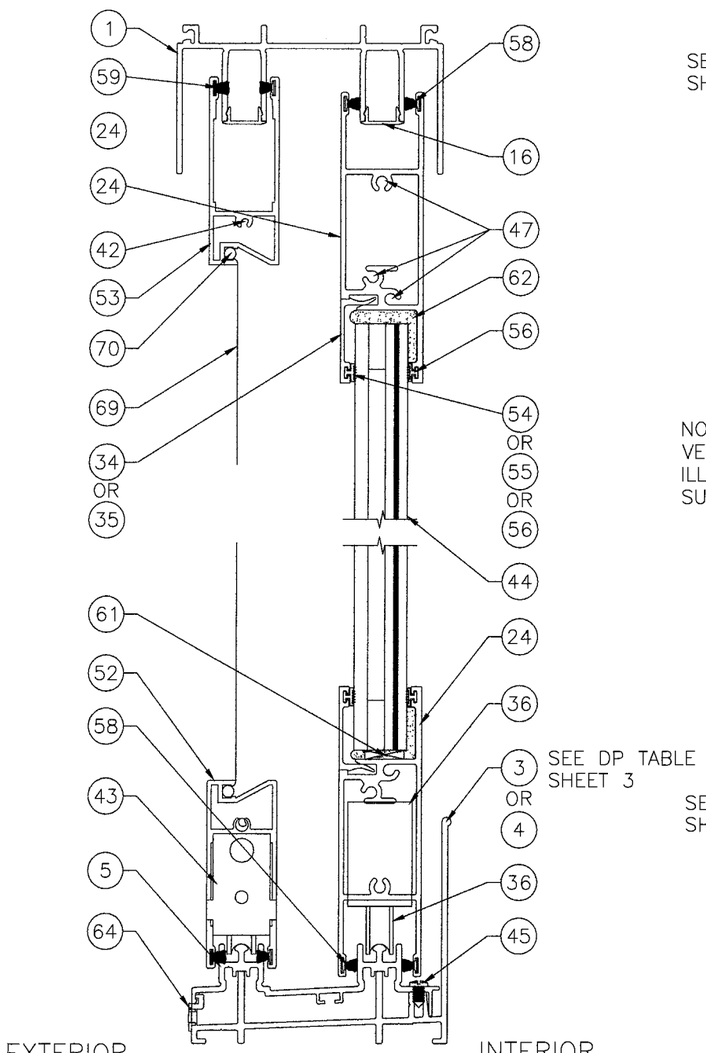


VERTICAL CROSS SECTION A

2 TRACK FRAME SYSTEM

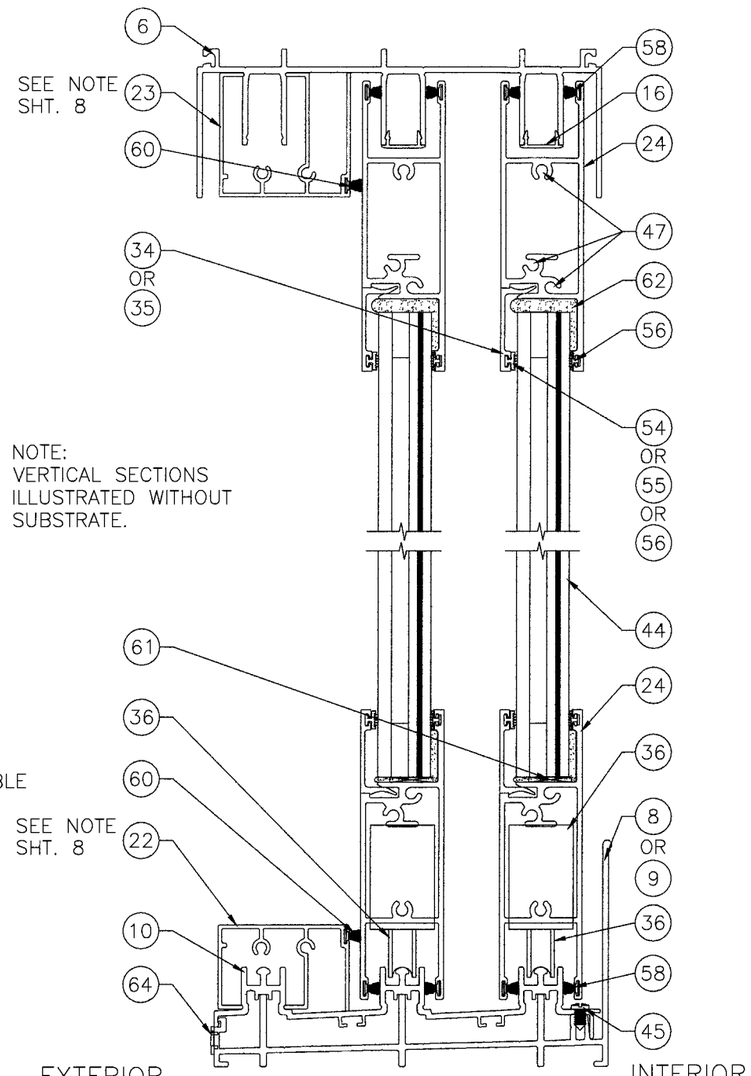


NOTE:
VERTICAL SECTIONS ILLUSTRATED WITHOUT SUBSTRATE.

VERTICAL CROSS SECTION B

3 TRACK FRAME SYSTEM

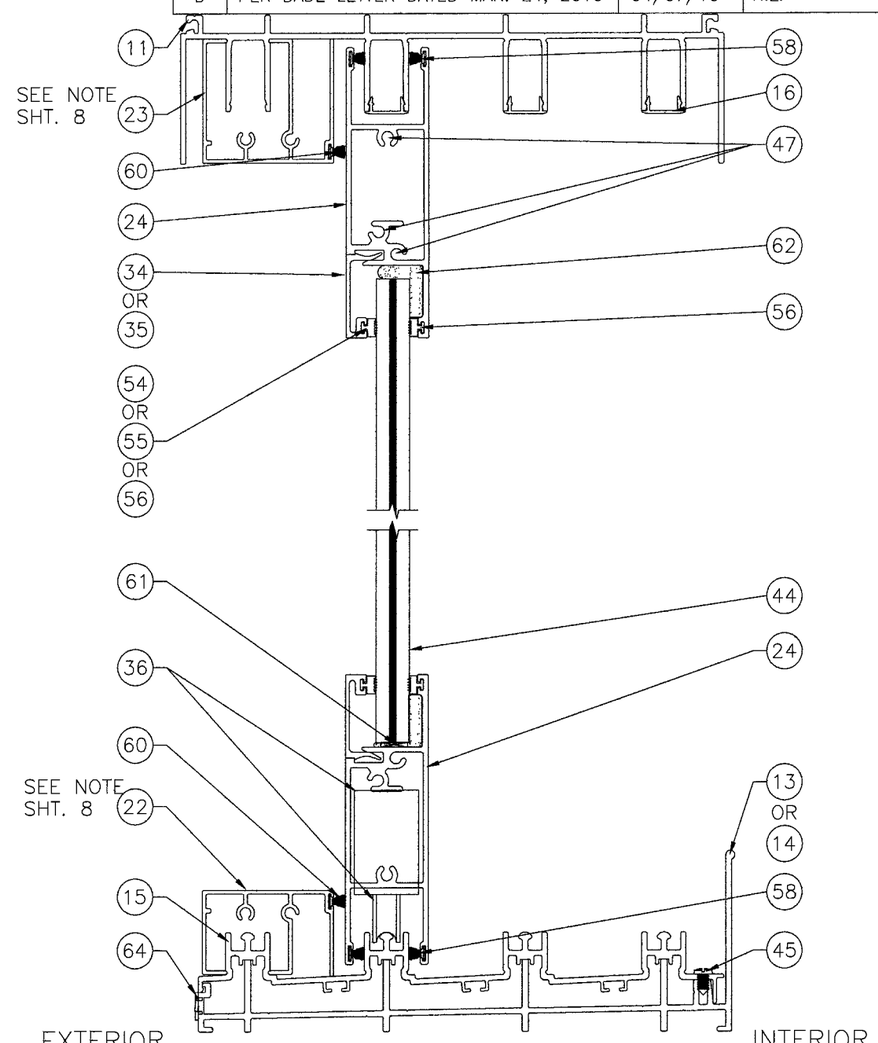


VERTICAL CROSS SECTION C

4 TRACK FRAME SYSTEM

SCREEN NOTE:
THE WS SCREEN IS SHOWN ON THE 2 TRACK UNIT AS APPLICABLE AT EXTERIOR TRACKS. IT IS QUALIFIED TO BE INSTALLED ON THE 3 TRACK AND 4 TRACK UNIT ALSO.

NOTE:
SEE SHEETS 13, 14 AND 15 FOR TYPICAL ANCHORAGE TO VARIOUS SUBSRTATE MATERIALS. A SPECIFIC SUBSTRATE IS INDICATED ON EACH HEAD AND TRACK SYSTEM. OTHER HEAD AND TRACK SYSTEMS ARE SIMILAR.

Approved as complying with the Florida Building Code
Date JUNE 3 2012
NOA# 09-0519.12
Miami Dade Product Control Division
By Ishaq I. Chanda


WinDoor INCORPORATED
7500 AMSTERDAM DRIVE
ORLANDO, FL 32832
Phone: 407.481.8400
Fax: 407.481.0505
www.windoorinc.com


7000 SERIES LMI REINFORCED
& NON-REINFORCED (5'0 x 8'2 PANEL)
VERTICAL CROSS SECTIONS

| DRAWN: | DWG NO. | REV |
|---|---|---|
| TJH | 08-00638 | D |
| SCALE NTS | DATE 12/10/08 | SHEET 7 OF 18 |

4/16/10

Luis R. Lomas P.E.
Florida No. 62514

| REVISIONS | | | |
|---|---|---|---|
| REV | DESCRIPTION | DATE | APPROVED |
| C | PER DADE LETTER DATED DEC. 21, 2009 | 01/19/10 | R.L. |
| D | PER DADE LETTER DATED MAR. 24, 2010 | 04/07/10 | R.L. |

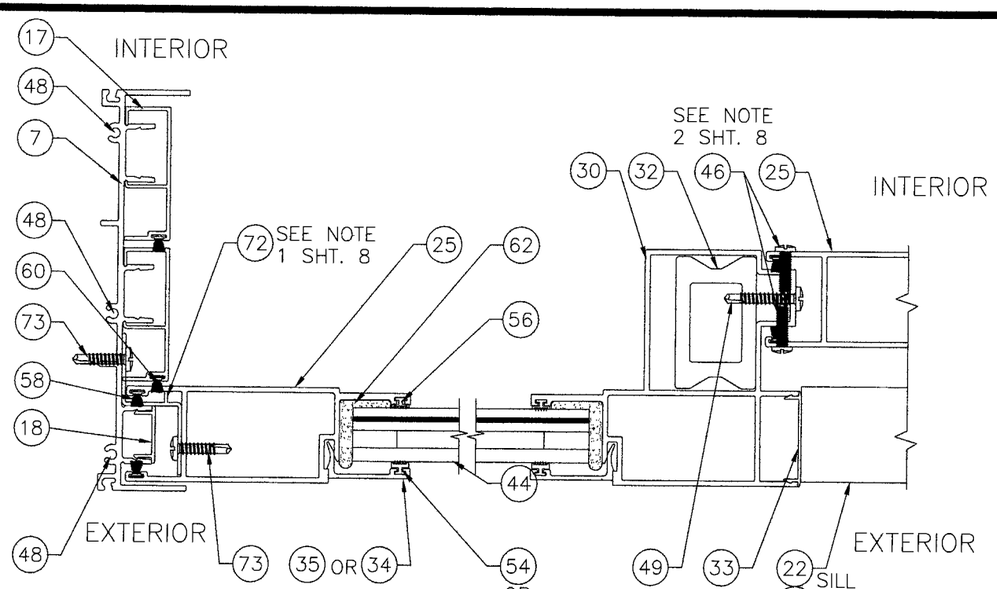


HORIZONTAL CROSS SECTION D

PLAIN STILE AT 3 TRACK JAMB

NOTE:
HORIZONTAL SECTIONS ILLUSTRATED WITHOUT SUBSTRATE.

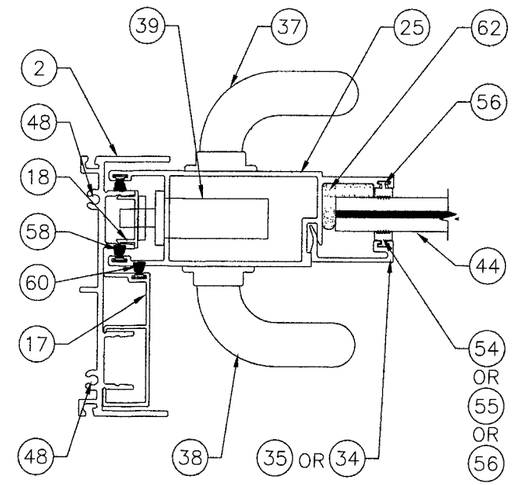


HORIZONTAL CROSS SECTION F

LOCK STILE AT 2 TRACK JAMB

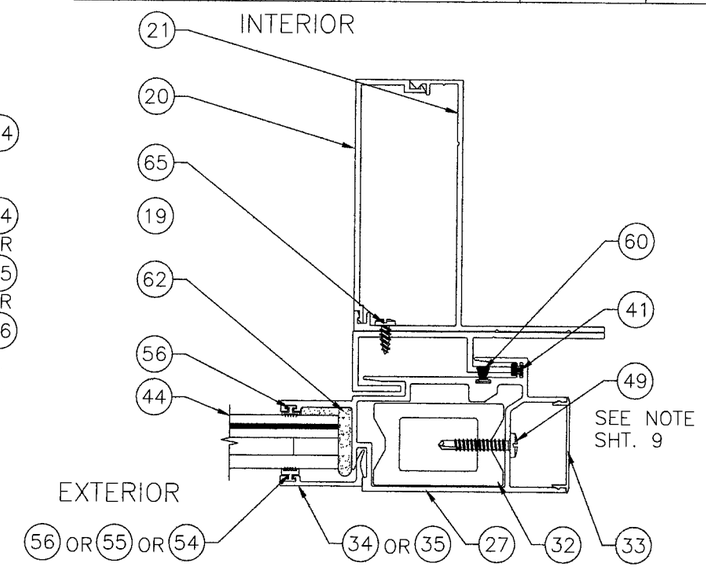


HORIZONTAL CROSS SECTION H

REINFORCED INTERLOCK STILE AT HOOK STRIP

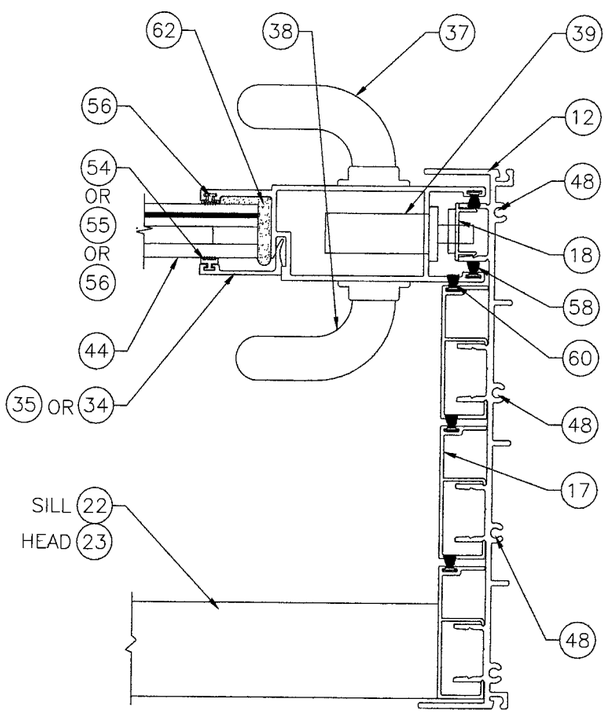


NON-REINFORCED/ REINFORCED UNITS

OPERABLE JAMB CONDITION

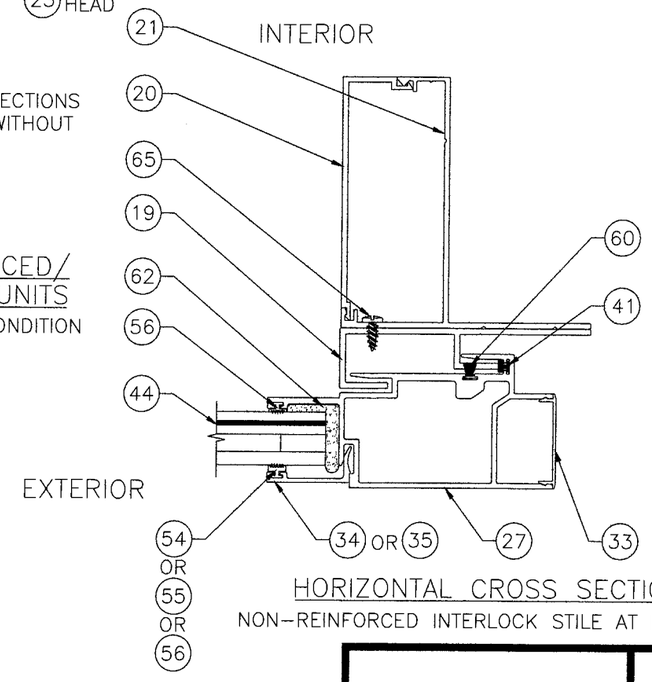


HORIZONTAL CROSS SECTION G

NON-REINFORCED INTERLOCK STILE AT HOOK STRIP

FIXED PANEL NOTES:

1. FIXED PANEL TO JAMB CONDITION:
FIXED PANEL IS SECURED TO JAMB USING (2) Z-CLIPS, ITEM #72, Z-CLIPS ARE LOCATED 24" FROM TOP OF PANEL DOWN AND 24" FROM BOTTOM OF PANEL UP. EACH Z-CLIP IS ATTACHED TO PANEL AND JAMB WITH (3) #10 x 3/4" PPH TEK SCREWS, ITEM #73. REFER TO SHEET 8 SECTION D AND SHEET 11 AND SECTION Z.

2. FIXED PANEL TO FIXED PANEL CONDITION:
FIXED PANELS ARE SECURED TOGETHER USING #8 x 3/4" PH TEK SCREW, ITEM #46, SCREWS ARE INSTALLED ON PANELS INTERIOR AND EXTERIOR AND ARE LOCATED 4" FROM TOP AND BOTTOM AND IN THE CENTER. REFER TO SHEET 8 SECTION D, SHEET 9 SECTION O, SHEET 10 SECTION U, SHEET 11 SECTION CC AND DD.

HORIZONTAL CROSS SECTION E

LOCK STILE AT 4 TRACK JAMB

NOTE:
SEE SHEETS 11, 12, 13 AND 14 FOR TYPICAL ANCHORAGE TO VARIOUS SUBSTRATE MATERIALS. A SPECIFIC SUBSTRATE IS INDICATED ON EACH TRACK SYSTEM. OTHER TRACK SYSTEMS ARE SIMILAR.

Approved as complying with the Florida Building Code
Date June 3 2012
NOA# 09-0519.12
Miami Dade Product Control Division
By [illegible]


WinDoor INCORPORATED
7500 AMSTERDAM DRIVE
ORLANDO, FL 32832
Phone: 407.481.8400
Fax: 407.481.0505
www.windoorinc.com


7000 SERIES LMI REINFORCED & NON-REINFORCED (5'0 x 8'2 PANEL) HORIZONTAL CROSS SECTIONS

| DRAWN: TJH | DWG NO. 08-00638 | REV D |
|---|---|---|
| SCALE NTS | DATE 12/10/08 | SHEET 8 OF 18 |

Luis R. Lomas 4/16/10

Luis R. Lomas P.E.
Florida No. 62514

| REVISIONS | | | |
|---|---|---|---|
| REV | DESCRIPTION | DATE | APPROVED |
| C | PER DADE LETTER DATED DEC. 21, 2009 | 01/19/10 | R.L. |
| D | PER DADE LETTER DATED MAR. 24, 2010 | 04/07/10 | R.L. |

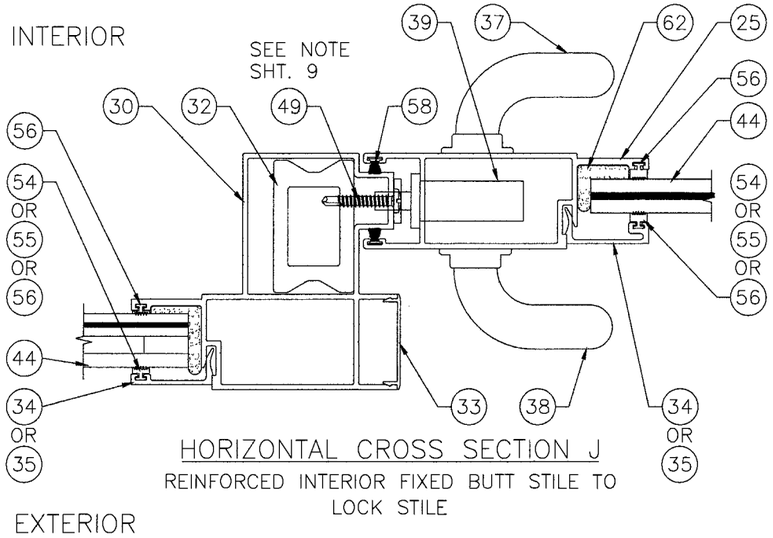


HORIZONTAL CROSS SECTION J

REINFORCED INTERIOR FIXED BUTT STILE TO LOCK STILE

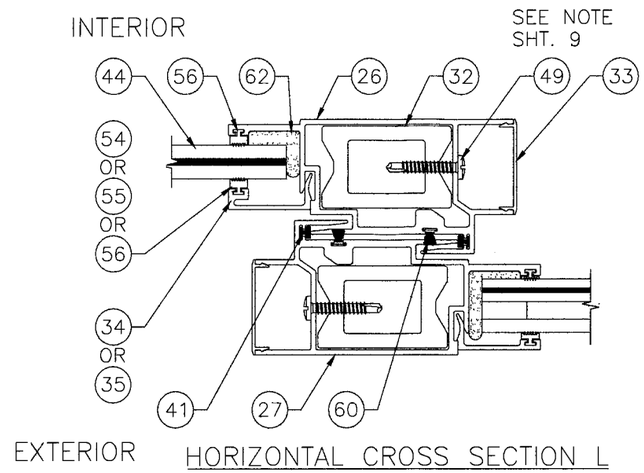


HORIZONTAL CROSS SECTION L

REINFORCED INTERLOCK STILE TO REINFORCED INTERLOCK STILE

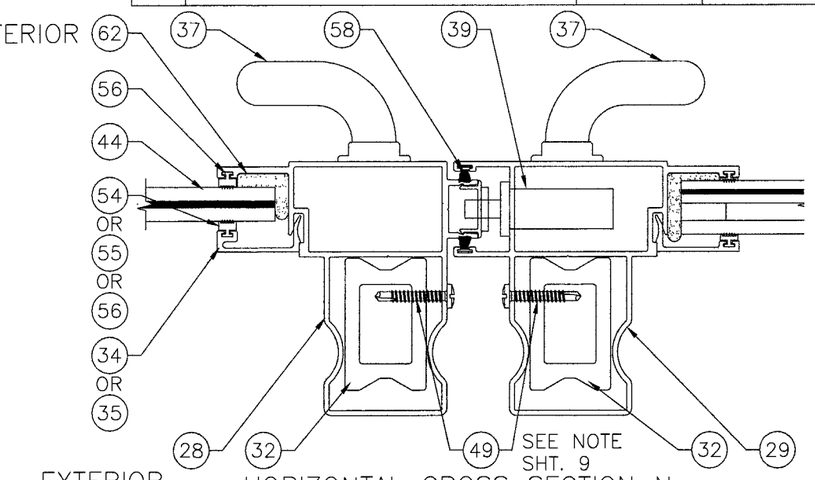


HORIZONTAL CROSS SECTION N

REINFORCED MALE BUTT STILE TO REINFORCED LOCKING BUTT STILE

NOTE:
HORIZONTAL SECTIONS ILLUSTRATED WITHOUT SUBSTRATE.

REINFORCED UNITS

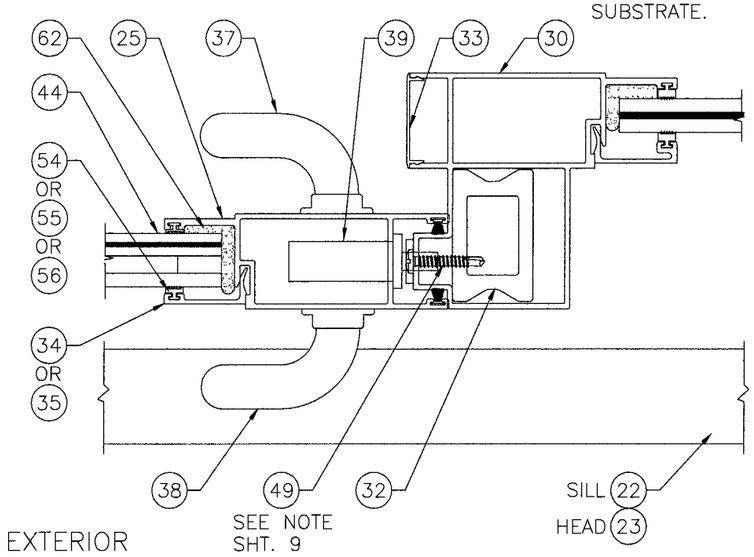


HORIZONTAL CROSS SECTION K

LOCK STILE TO REINFORCED EXTERIOR FIXED BUTT STILE

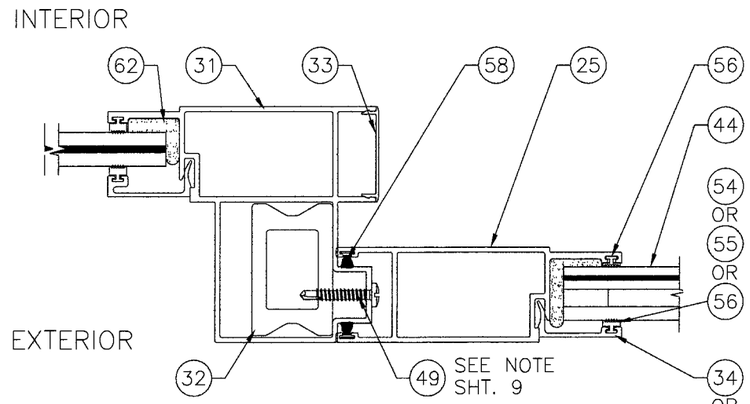


HORIZONTAL CROSS SECTION M

REINFORCED EXTERIOR FIXED BUTT STILE TO PLAIN STILE

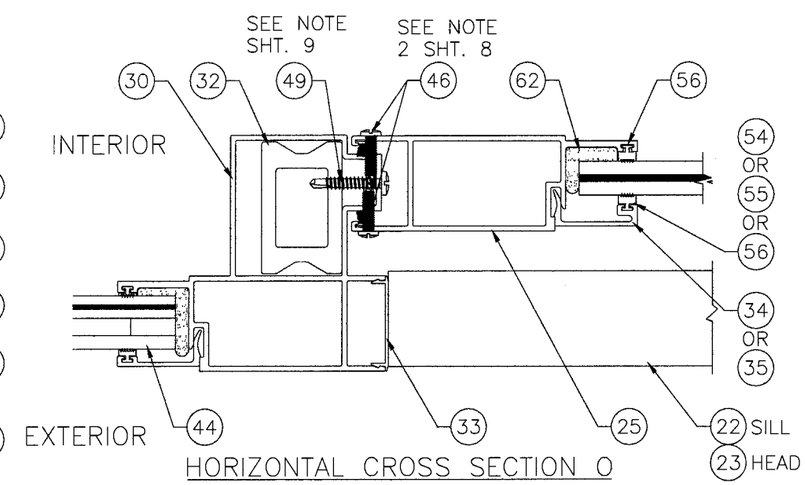


HORIZONTAL CROSS SECTION O

REINFORCED INTERIOR FIXED BUTT STILE TO PLAIN STILE

REINFORCING BAR NOTE:
ITEM #32, INTERLOCK REINFORCING BAR, IS SECURED TO THE INTERLOCK LEFT #26, INTERLOCK RIGHT #27, MALE BUTT STILE #28, LOCKING BUTT STILE #29 INTERIOR FIXED BUTT STILE #30 AND EXTERIOR FIXED BUTT STILE #31 WITH ITEM #49, #10 x 1" TEK SCREW SPACED 6" FROM TOP AND BOTTOM AND ONE IN THE CENTER.

Approved as complying with the Florida Building Code
Date JUNE 3, 2012
NOA# 09-0519.12
Miami Dade Product Control Division
By Shaq L. Chandler


WinDoor INCORPORATED
7500 AMSTERDAM DRIVE
ORLANDO, FL 32832
Phone: 407.481.8400
Fax: 407.481.0505
www.windoorinc.com


7000 SERIES LMI REINFORCED & NON-REINFORCED (5'0 x 8'2 PANEL) HORIZONTAL CROSS SECTIONS

| DRAWN: | DWG NO. | REV |
|---|---|---|
| TJH | 08-00638 | D |
| SCALE NTS | DATE 12/10/08 | SHEET 9 OF 18 |

Luis R. Lomas
4/16/10

Luis R. Lomas P.E.
Florida No. 62514

| REVISIONS | | | |
|---|---|---|---|
| REV | DESCRIPTION | DATE | APPROVED |
| C | PER DADE LETTER DATED DEC. 21, 2009 | 01/19/10 | R.L. |
| D | PER DADE LETTER DATED MAR. 24, 2010 | 04/07/10 | R.L. |

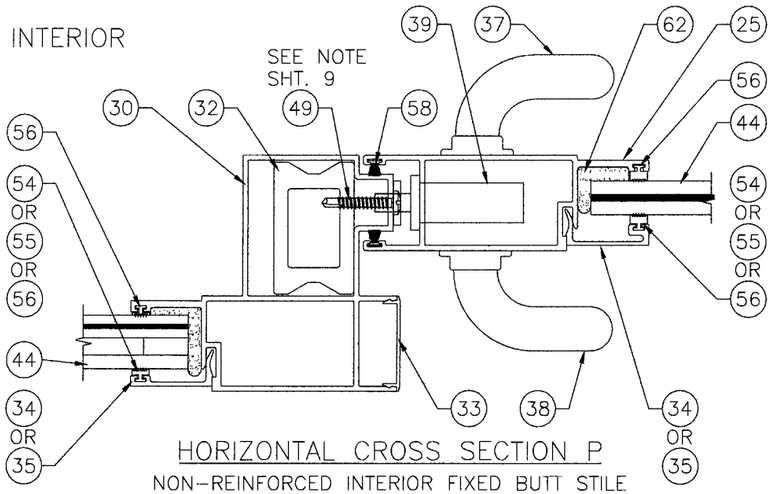


HORIZONTAL CROSS SECTION P

NON-REINFORCED INTERIOR FIXED BUTT STILE TO LOCK STILE

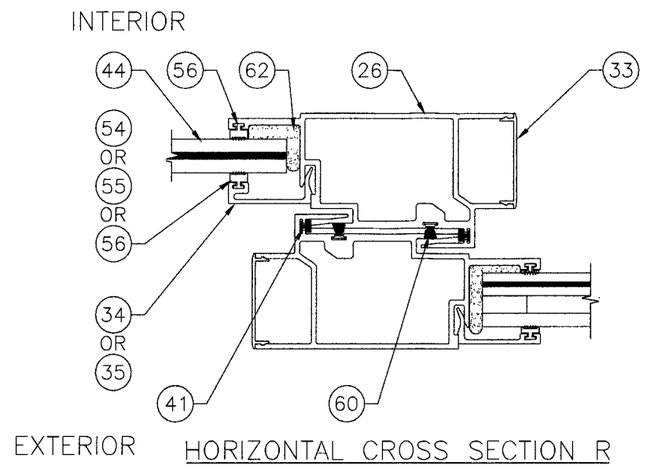


HORIZONTAL CROSS SECTION R

NON-REINFORCED INTERLOCK STILE TO NON-REINFORCED INTERLOCK STILE

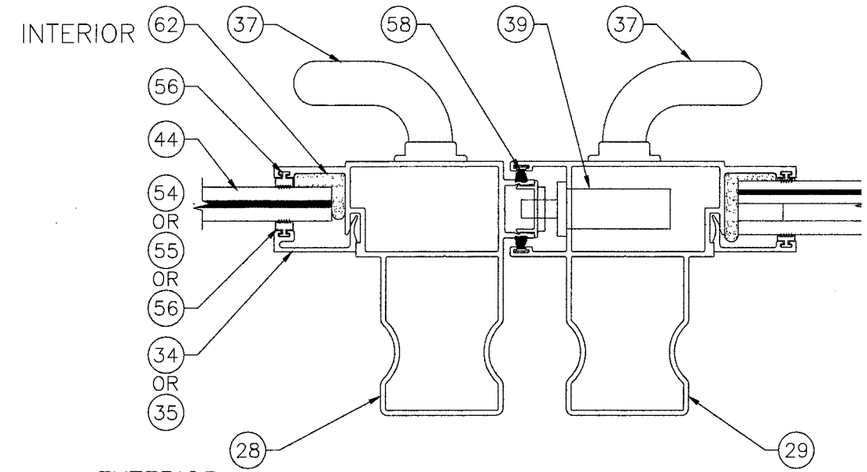


HORIZONTAL CROSS SECTION T

NON-REINFORCED MALE BUTT STILE TO NON-REINFORCED LOCKING BUTT STILE

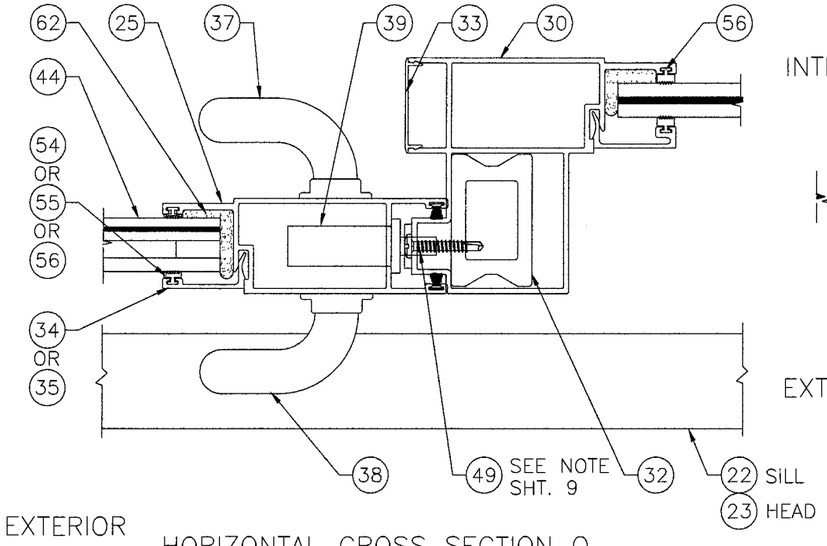


HORIZONTAL CROSS SECTION Q

LOCK STILE TO NON-REINFORCED EXTERIOR FIXED BUTT STILE

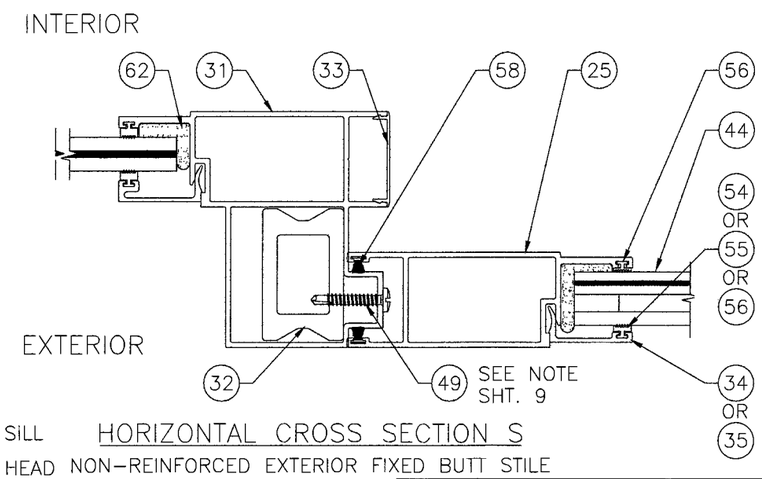


HORIZONTAL CROSS SECTION S

NON-REINFORCED EXTERIOR FIXED BUTT STILE TO PLAIN STILE

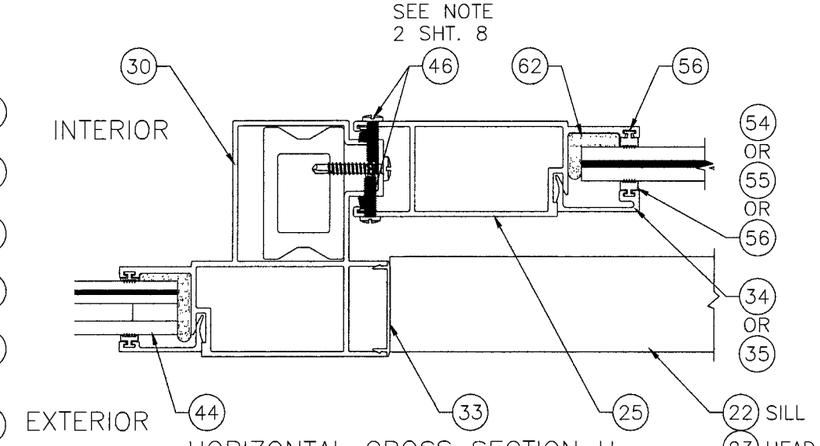


HORIZONTAL CROSS SECTION U

NON-REINFORCED INTERIOR FIXED BUTT STILE TO PLAIN STILE

Approved as complying with the Florida Building Code
Date JUNE 3 2010
NOA# 09-0519.17
Miami Dade Product Control Division
By Ishaq I. Chanda


WinDoor INCORPORATED
7500 AMSTERDAM DRIVE
ORLANDO, FL 32832
Phone: 407.481.8400
Fax: 407.481.0505
www.windoorinc.com


7000 SERIES LMI REINFORCED & NON-REINFORCED (5'0 x 8'2 PANEL) HORIZONTAL CROSS SECTIONS

| DRAWN: | DWG NO. | REV |
|---|---|---|
| TJH | 08-00638 | D |
| SCALE NTS | DATE 12/10/08 | SHEET 10 OF 18 |

Luis R. Lomas 4/16/10

Luis R. Lomas P.E.
Florida No. 62514

| REVISIONS | | | |
|---|---|---|---|
| REV | DESCRIPTION | DATE | APPROVED |
| C | PER DADE LETTER DATED DEC. 21, 2009 | 01/19/10 | R.L. |
| D | PER DADE LETTER DATED MAR. 24, 2010 | 04/07/10 | R.L. |

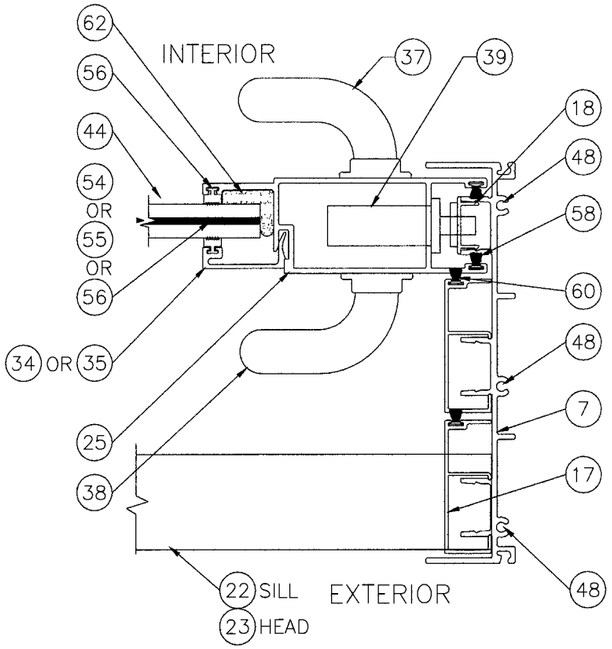


HORIZONTAL CROSS SECTION V

LOCK STILE AT 3 TRACK JAMB

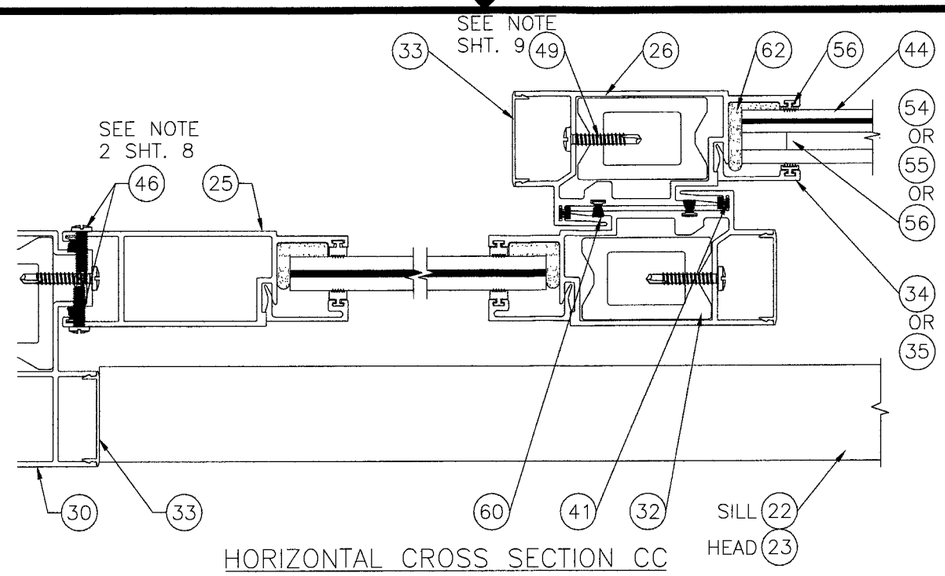


HORIZONTAL CROSS SECTION CC

REINFORCED INTERLOCK STILE TO REINFORCED INTERLOCK STILE

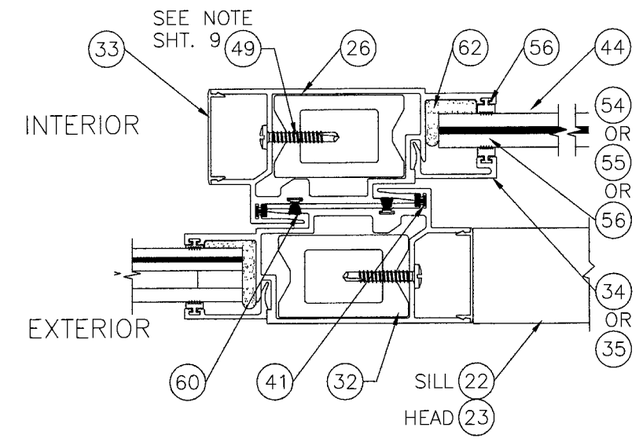


HORIZONTAL CROSS SECTION X

REINFORCED INTERLOCK STILE TO REINFORCED INTERLOCK STILE

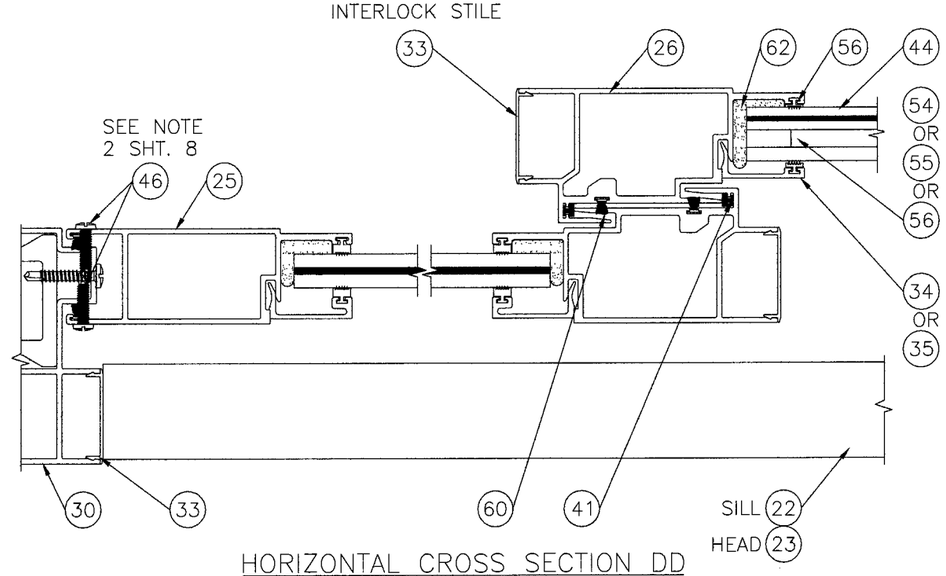


HORIZONTAL CROSS SECTION DD

NON-REINFORCED INTERLOCK STILE TO NON-REINFORCED INTERLOCK STILE

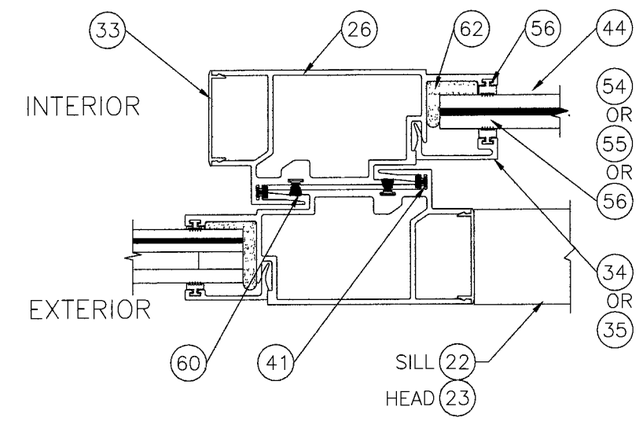


HORIZONTAL CROSS SECTION Y

NON-REINFORCED INTERLOCK STILE TO NON-REINFORCED INTERLOCK STILE

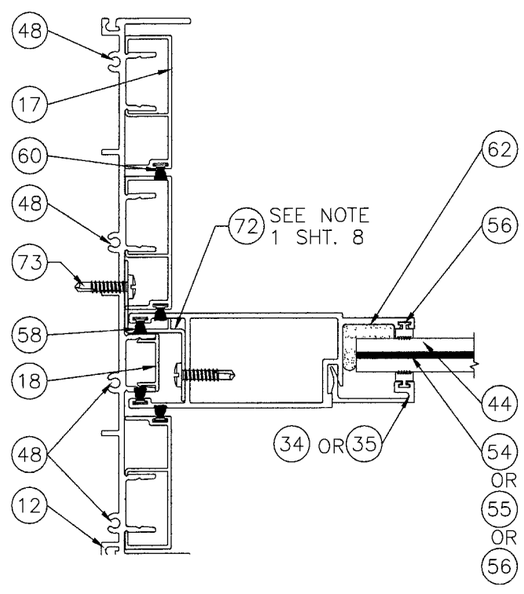


HORIZONTAL CROSS SECTION Z

PLAIN STILE AT 4 TRACK JAMB

Approved as complying with the Florida Building Code
Date June 3, 2010
NOA# 09-0519.12
Miami Dade Product Control Division
By Ishaq I. Chand

WinDoor INCORPORATED


7500 AMSTERDAM DRIVE
ORLANDO, FL 32832
Phone: 407.481.8400
Fax: 407.481.0505
www.windoorinc.com


7000 SERIES LMI REINFORCED & NON-REINFORCED (5'0 x 8'2 PANEL) HORIZONTAL CROSS SECTIONS

| DRAWN: | DWG NO. | REV |
|---|---|---|
| TJH | 08-00638 | D |

| SCALE | DATE | SHEET |
|---|---|---|
| NTS | 12/10/08 | 11 OF 18 |

Luis R. Lomas 4/16/10

Luis R. Lomas P.E.
Florida No. 62514

| REVISIONS | | | |
|---|---|---|---|
| REV | DESCRIPTION | DATE | APPROVED |
| C | PER DADE LETTER DATED DEC. 21, 2009 | 01/19/10 | R.L. |
| D | PER DADE LETTER DATED MAR. 24, 2010 | 04/07/10 | R.L. |

NOTE:
VERTICAL SECTIONS ILLUSTRATED WITHOUT SUBSTRATE.

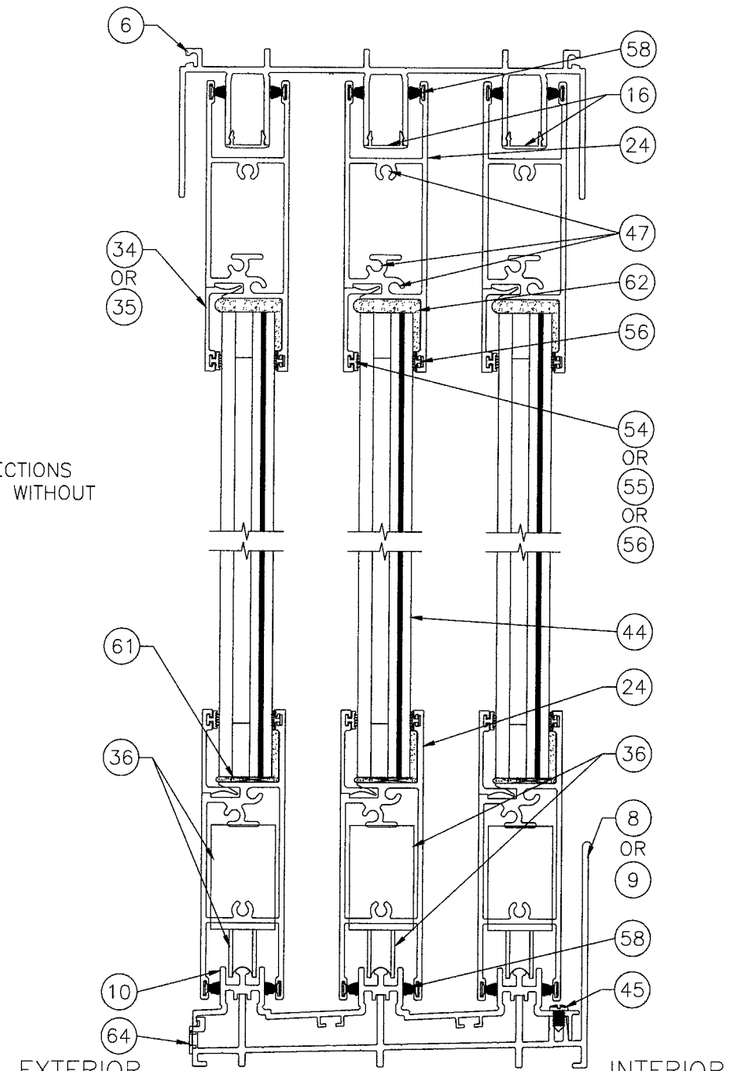


VERTICAL CROSS SECTION AA
3 TRACK FRAME SYSTEM

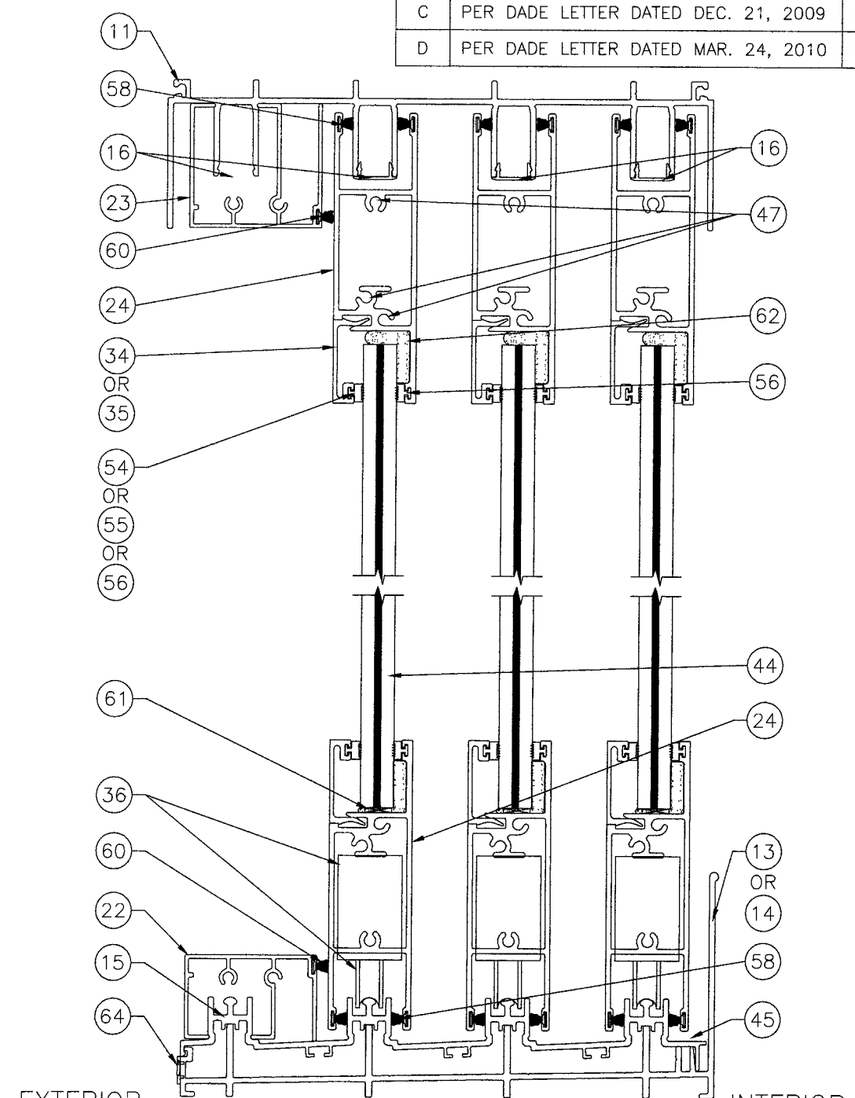


VERTICAL CROSS SECTION BB
4 TRACK FRAME SYSTEM

NOTE:
SEE SHEETS 12, 13 AND 14 FOR TYPICAL ANCHORAGE TO VARIOUS SUBSTRATE MATERIALS. A SPECIFIC SUBSTRATE IS INDICATED ON EACH HEAD AND TRACK SYSTEM. OTHER HEAD AND TRACK SYSTEMS ARE SIMILAR.

Approved as complying with the Florida Building Code
Date June 2, 2012
NOA# 09-0519.12
Miami Dade Product Control Division
By Ishaq I. Khan


WinDoor INCORPORATED
7500 AMSTERDAM DRIVE
ORLANDO, FL 32832
Phone: 407.481.8400
Fax: 407.481.0505
www.windoorinc.com


7000 SERIES LMI REINFORCED
& NON-REINFORCED (5'0 x 8'2 PANEL)
HORIZONTAL CROSS SECTIONS

| DRAWN: | DWG NO. | REV |
|---|---|---|
| TJH | 08-00638 | D |
| SCALE NTS | DATE 12/10/08 | SHEET 12 OF 18 |

Luis R. Lomas
4/16/10

Luis R. Lomas P.E.
Florida No. 62514

| REVISIONS | | | |
|---|---|---|---|
| REV | DESCRIPTION | DATE | APPROVED |
| C | PER DADE LETTER DATED DEC. 21, 2009 | 01/19/10 | R.L. |
| D | PER DADE LETTER DATED MAR. 24, 2010 | 04/07/10 | R.L. |

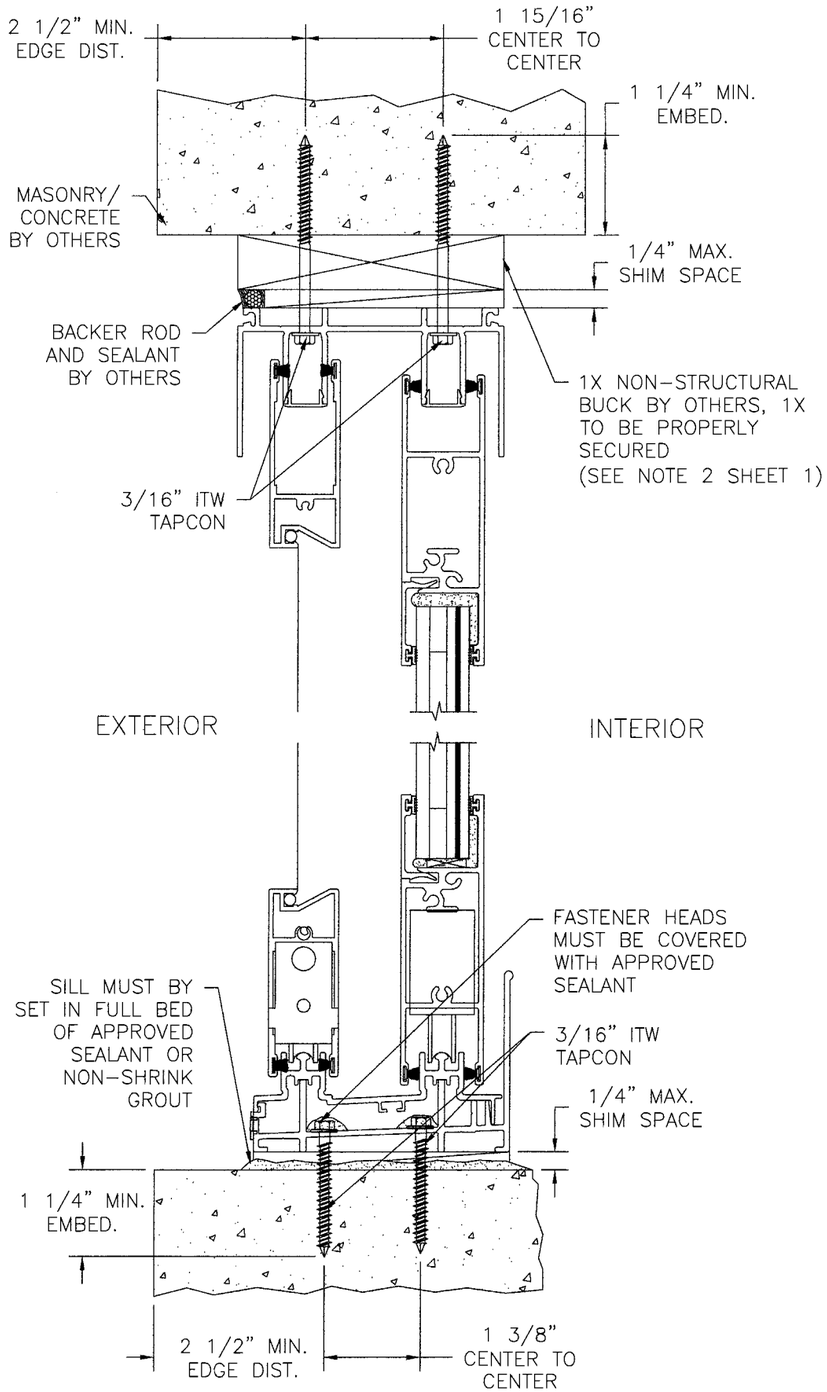


2 TRACK FRAME VERTICAL INSTALLATION

MASONRY/CONCRETE INSTALLATION, 2TRACK SHOWN 3 TRACK & 4 TRACK SIMILAR

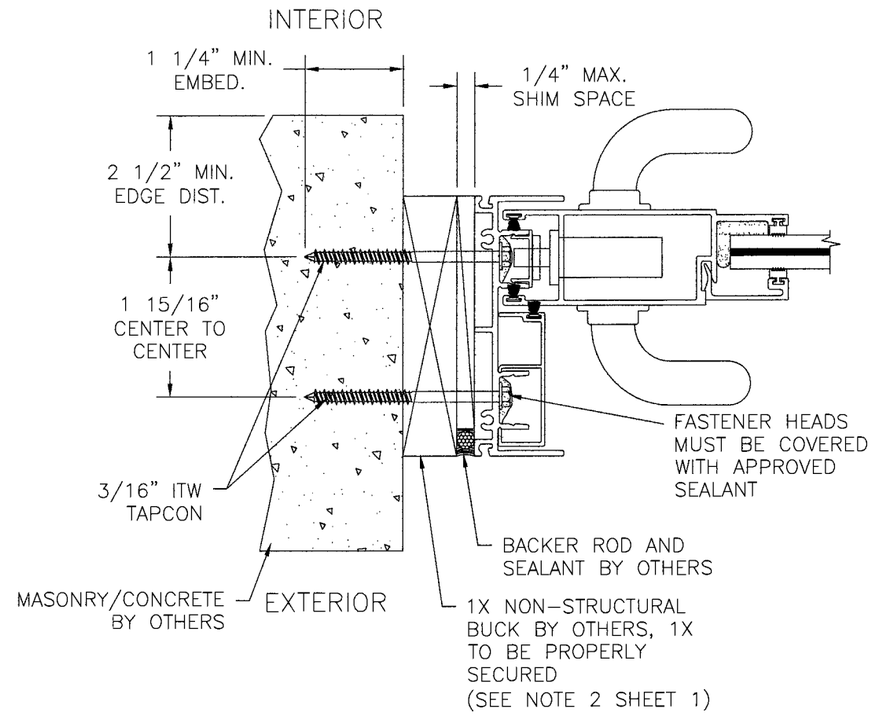


2 TRACK FRAME JAMB INSTALLATION

1X BUCK TO MASONRY/CONCRETE INSTALLATION, 2 TRACK SHOWN 3 TRACK & 4 TRACK SIMILAR

NOTE:
CONCRETE SUBSTRATE SHOWN. ANCHORAGE IN EXTERIOR TRACK LOCATIONS IS TYPICAL FOR 3 TRACK AND 4 TRACK SYSTEMS.

Approved as complying with the Florida Building Code
Date June 2, 2010
NOA# 09-0519.12
Miami Dade Product Control Division
By Ishaq I. Chanda


WinDoor INCORPORATED
7500 AMSTERDAM DRIVE
ORLANDO, FL 32832
Phone: 407.481.8400
Fax: 407.481.0505
www.windoorinc.com


7000 SERIES LMI REINFORCED & NON-REINFORCED (5'0 x 8'2 PANEL) INSTALLATION DETAILS

| DRAWN: | DWG NO. | REV |
|---|---|---|
| TJH | 08-00638 | D |

| SCALE | DATE | SHEET |
|---|---|---|
| NTS | 12/10/08 | 13 OF 18 |

Luis R. Lomas
4/16/10

Luis R. Lomas P.E.
Florida No. 62514

| REVISIONS | | | |
|---|---|---|---|
| REV | DESCRIPTION | DATE | APPROVED |
| C | PER DADE LETTER DATED DEC. 21, 2009 | 01/19/10 | R.L. |
| D | PER DADE LETTER DATED MAR. 24, 2010 | 04/07/10 | R.L. |

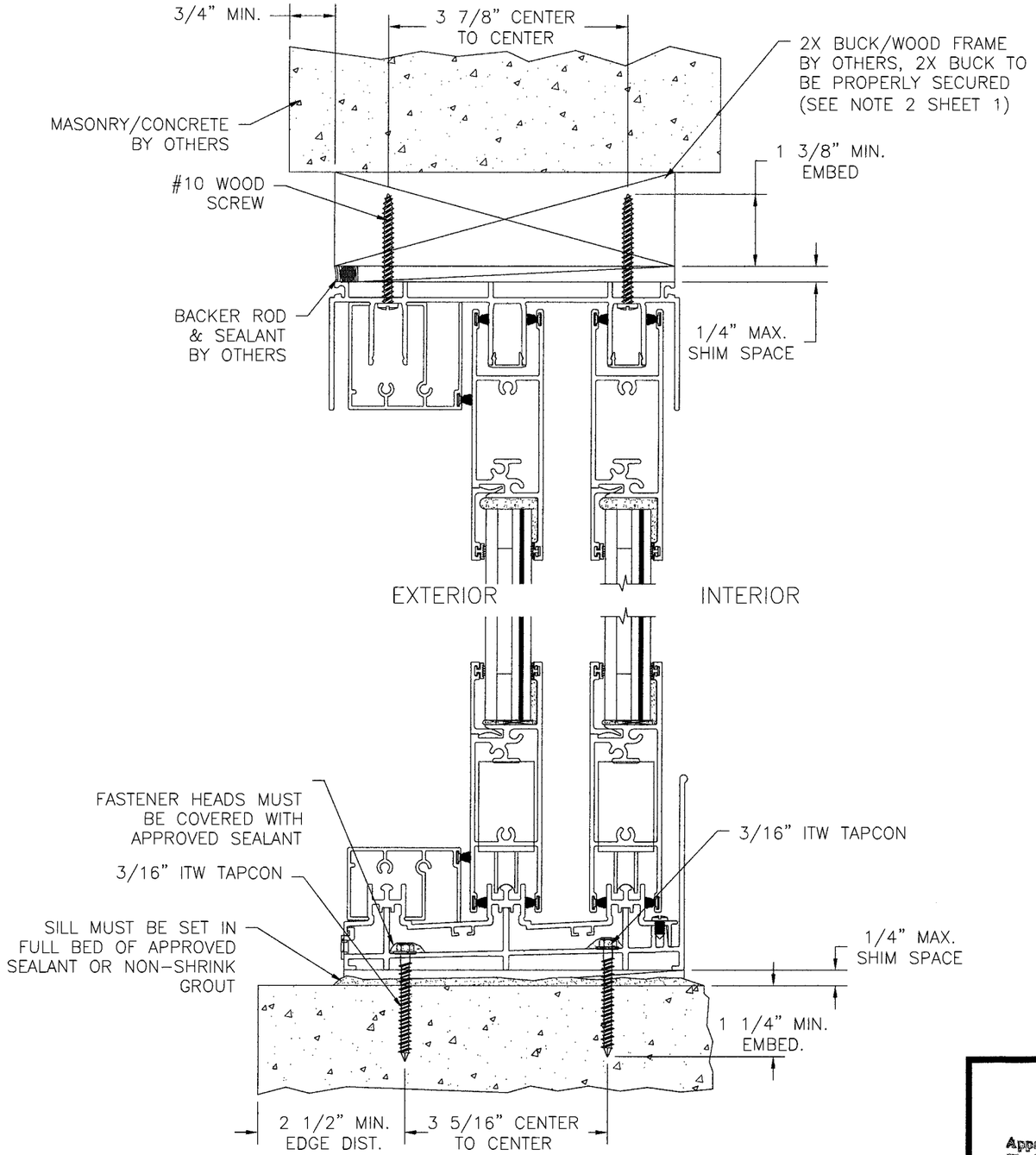


3 TRACK FRAME VERTICAL INSTALLATION

2X BUCK/WOOD FRAME INSTALLATION, 3 TRACK SHOWN 2 TRACK & 4 TRACK SIMILAR

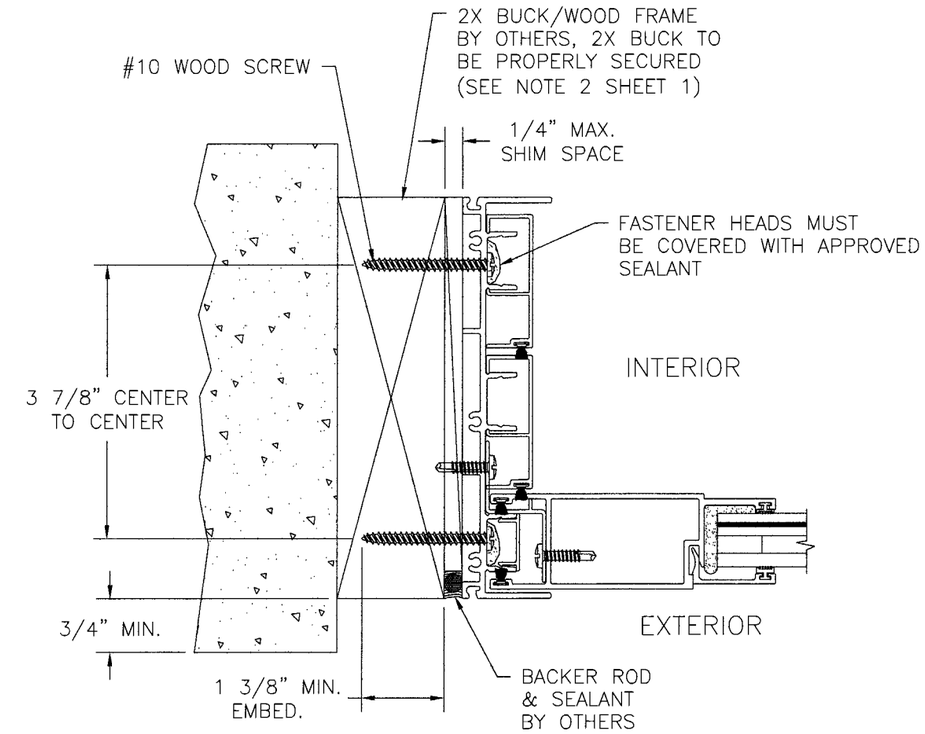


3 TRACK FRAME JAMB INSTALLATION

2X BUCK/WOOD FRAME INSTALLATION, 3 TRACK SHOWN 2 TRACK & 4 TRACK SIMILAR

NOTE:
2X BUCK/WOOD FRAME SUBSTRATE SHOWN. ANCHORAGE IN EXTERIOR TRACK LOCATIONS IS TYPICAL FOR 2 TRACK AND 4 TRACK SYSTEMS.

Approved as complying with the Florida Building Code
Date June 2, 2010
NOA# 09-0519.12
Miami Dade Product Control Division
By Ishag J. Chandra

WinDoor INCORPORATED
7500 AMSTERDAM DRIVE
ORLANDO, FL 32832
Phone: 407.481.8400
Fax: 407.481.0505
www.windoorinc.com

7000 SERIES LMI REINFORCED & NON-REINFORCED (5'0 x 8'2 PANEL) INSTALLATION DETAILS

| DRAWN: | DWG NO. | REV |
|---|---|---|
| TJH | 08-00638 | D |
| SCALE NTS | DATE 12/10/08 | SHEET 14 OF 18 |

Luis R. Lomas
4/16/10
Luis R. Lomas P.E.
Florida No. 62514

| REVISIONS | | | |
|---|---|---|---|
| REV | DESCRIPTION | DATE | APPROVED |
| C | PER DADE LETTER DATED DEC. 21, 2009 | 01/19/10 | R.L. |
| D | PER DADE LETTER DATED MAR. 24, 2010 | 04/07/10 | R.L. |

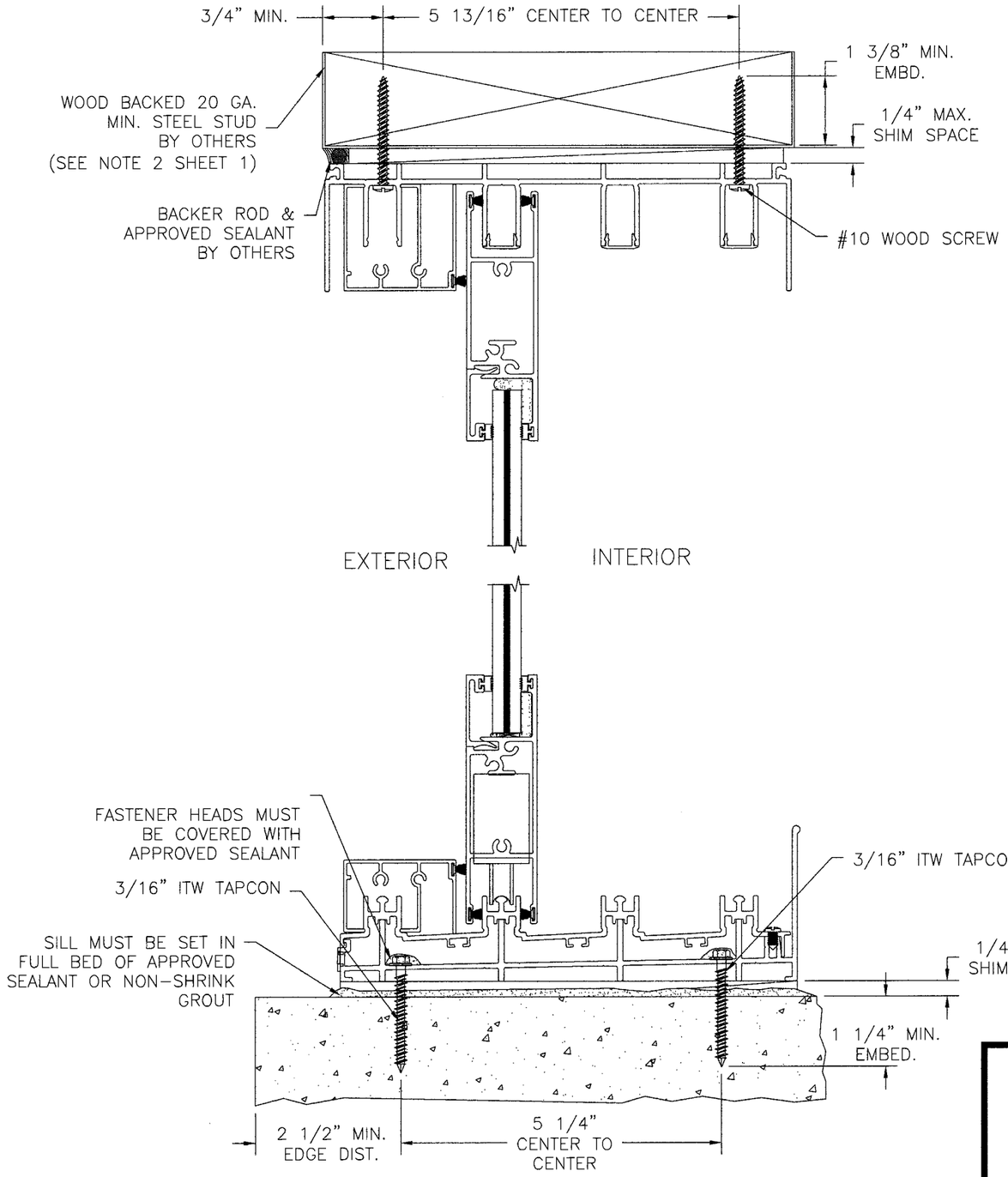


4 TRACK FRAME VERTICAL INSTALLATION

WOOD BACKED 20 GA. STEEL STUD INSTALLATION, 4 TRACK SHOWN 2 TRACK & 3 TRACK SIMILAR

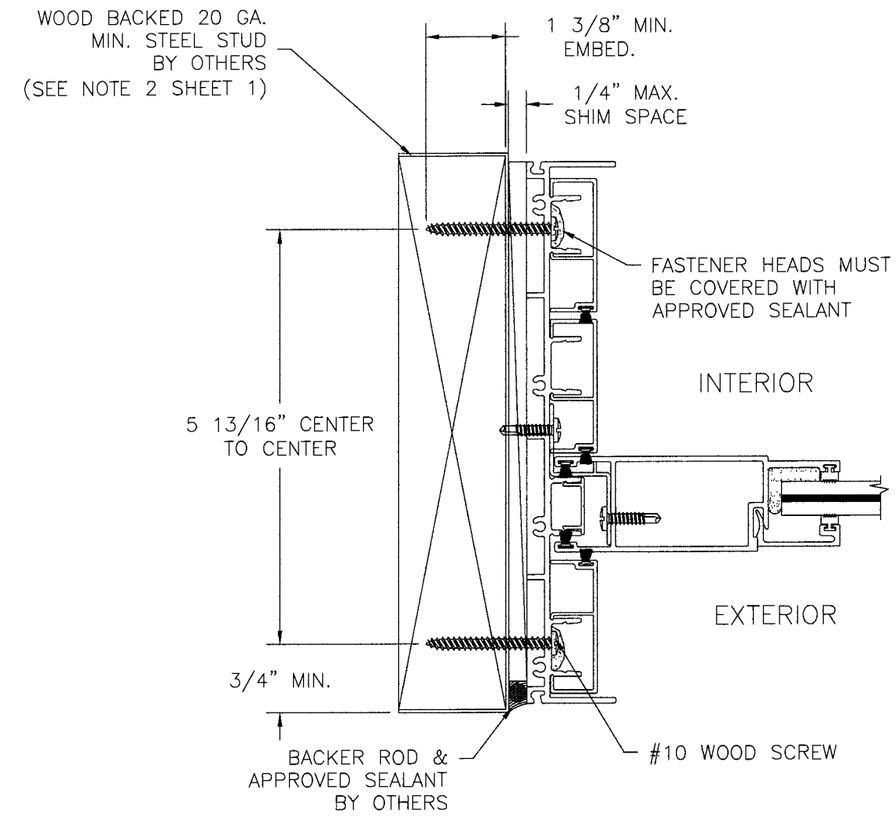


4 TRACK FRAME JAMB INSTALLATION

WOOD BACKED 20 GA. STEEL STUD INSTALLATION, 4 TRACK SHOWN 2 TRACK & 3 TRACK SIMILAR

NOTE:
WOOD BACKED 20 GA. STEEL STUD SUBSTRATE SHOWN. ANCHORAGE IN EXTERIOR TRACK LOCATIONS IS TYPICAL FOR 2 TRACK AND 3 TRACK SYSTEMS.

Approved as complying with the Florida Building Code
Date JUNE 3, 2010
NOA# 09-0519.12
Miami Dade Product Control Division
By Shag L. Chand

WinDoor INCORPORATED


7500 AMSTERDAM DRIVE
ORLANDO, FL 32832
Phone: 407.481.8400
Fax: 407.481.0505
www.windoorinc.com


7000 SERIES LMI REINFORCED & NON-REINFORCED (5'0 x 8'2 PANEL) INSTALLATION DETAILS

| DRAWN: | DWG NO. | REV |
|---|---|---|
| TJH | 08-00638 | D |
| SCALE NTS | DATE 12/10/08 | SHEET 15 OF 18 |

Luis R. Lomas 4/16/10

Luis R. Lomas P.E.
Florida No. 62514

| REVISIONS | | | |
|---|---|---|---|
| REV | DESCRIPTION | DATE | APPROVED |
| C | PER DADE LETTER DATED DEC. 21, 2009 | 01/19/10 | R.L. |
| D | PER DADE LETTER DATED MAR. 24, 2010 | 04/07/10 | R.L. |

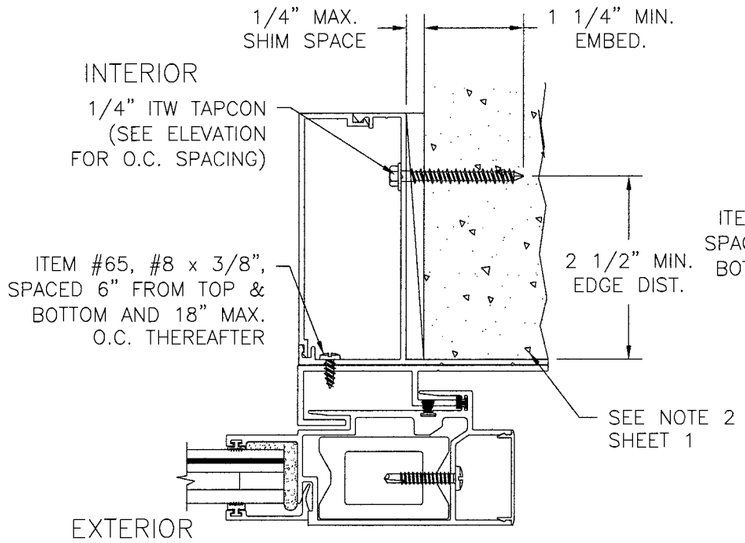


POCKET HOOK STRIP

MASONRY/CONCRETE INSTALLATION
REINFORCED SHOWN, NON-REINFORCED SIMILAR.

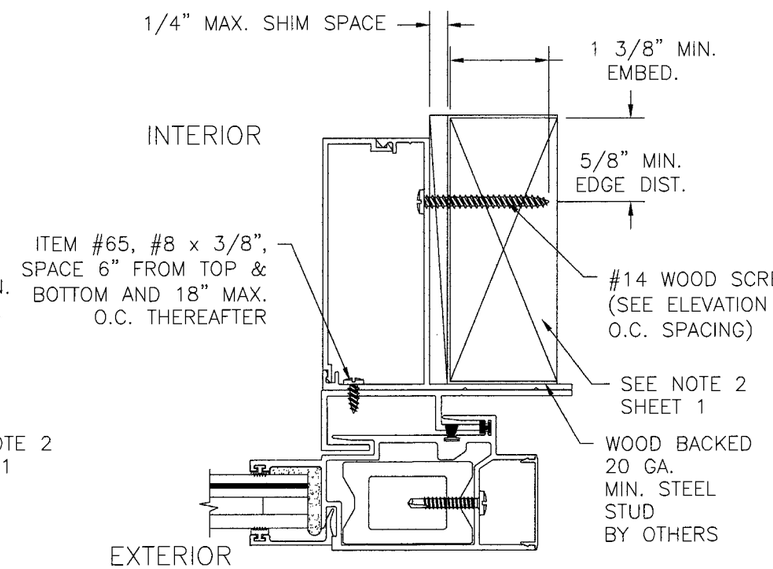


POCKET HOOK STRIP

WOOD BACKED 20 GA. STEEL STUD INSTALLATION
REINFORCED SHOWN, NON-REINFORCED SIMILAR.

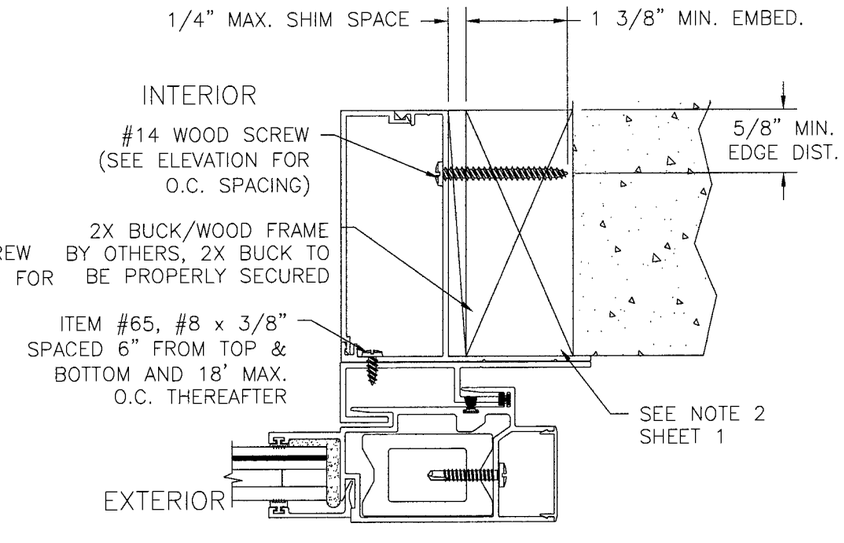


POCKET HOOK STRIP

2X BUCK/WOOD FRAME INSTALLATION REINFORCED
SHOWN, NON-REINFORCED SIMILAR.

Approved as complying with the Florida Building Code
Date June 3, 2010
NOA# 09-0519.12
Miami Dade Product Control Division
By Shang L. Chauda

WinDoor INCORPORATED
7500 AMSTERDAM DRIVE
ORLANDO, FL 32832
Phone: 407.481.8400
Fax: 407.481.0505
www.windoorinc.com

7000 SERIES LMI REINFORCED
& NON-REINFORCED (5'0 x 8'2 PANEL)
INSTALLATION DETAILS

| DRAWN: | DWG NO. | REV |
|---|---|---|
| TJH | 08-00638 | D |
| SCALE NTS | DATE 12/10/08 | SHEET 16 OF 18 |

Luis R. Lomas
4/14/10

Luis R. Lomas P.E.
Florida No. 62514

| REVISIONS | | | |
|---|---|---|---|
| REV | DESCRIPTION | DATE | APPROVED |
| C | PER DADE LETTER DATED DEC. 21, 2009 | 01/19/10 | R.L. |
| D | PER DADE LETTER DATED MAR. 24, 2010 | 04/07/10 | R.L. |

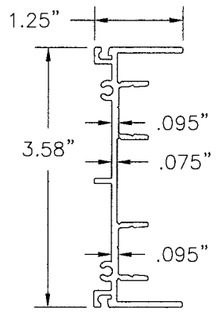


(2) 2 TRACK FRAME JAMB
6063-T6 ALUM.

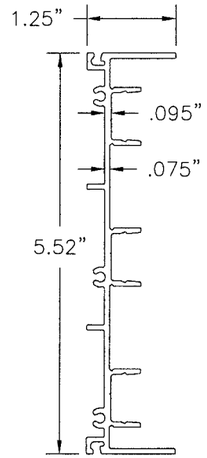


(7) 3 TRACK FRAME JAMB
6063-T6 ALUM.

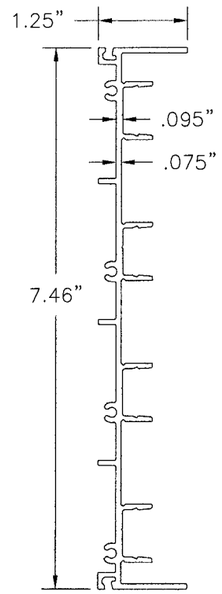


(12) 4 TRACK FRAME JAMB
6063-T6 ALUM.

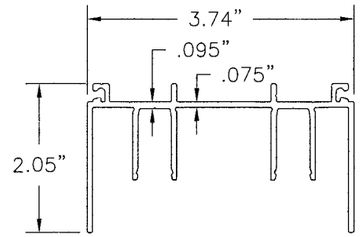


(1) 2 TRACK FRAME HEAD
6063-T6 ALUM.

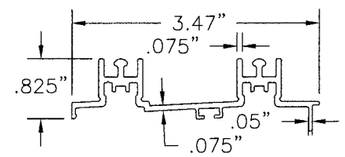


(5) 2T SILL INSERT
6063-T6 ALUM.

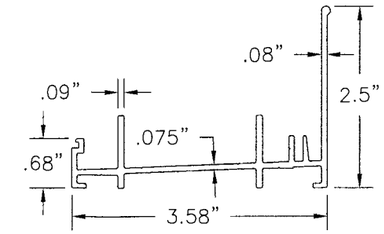


(3) 2 TRACK SILL PAN 2 1/2" RISER
6063-T6 ALUM.

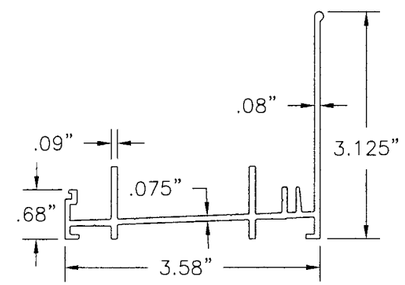


(4) 2 TRACK SILL PAN 3 1/8" RISER
6063-T6 ALUM.

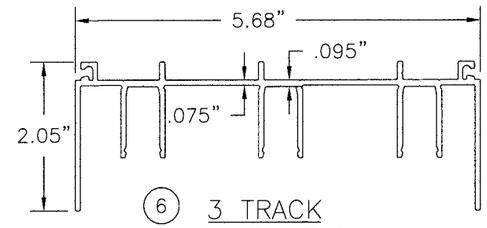


(6) 3 TRACK FRAME HEAD
6063-T6 ALUM.

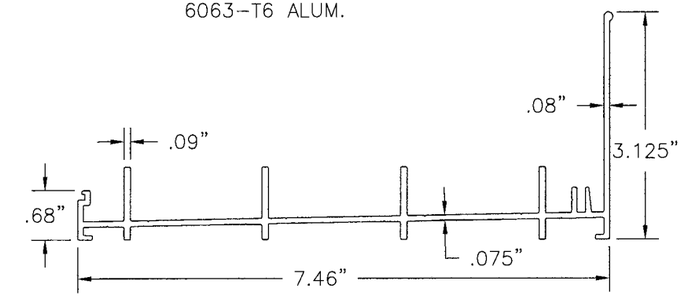


(14) 4 TRACK SILL PAN 3 1/8" RISER
6063-T6 ALUM.

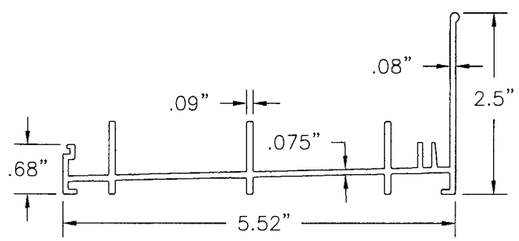


(8) 3 TRACK SILL PAN 2 1/2" RISER
6063-T6 ALUM.

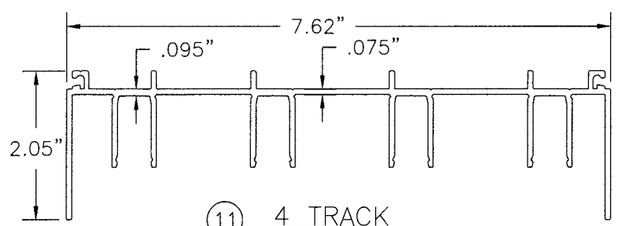


(11) 4 TRACK FRAME HEAD
6063-T6 ALUM.

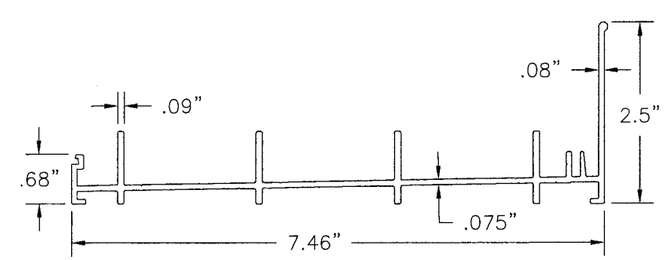


(13) 4 TRACK SILL PAN 2 1/2" RISER
6063-T6 ALUM.

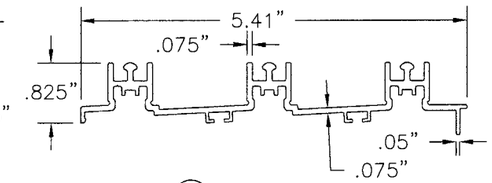


(10) 3 TRACK SILL INSERT
6063-T6 ALUM.

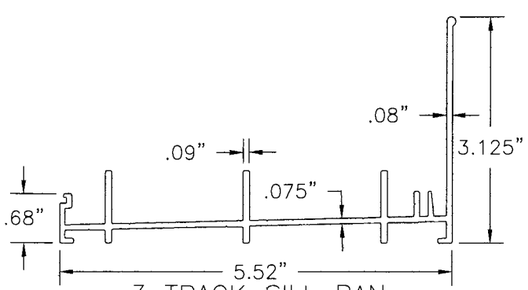


(9) 3 TRACK SILL PAN 3 1/8" RISER
6063-T6 ALUM.

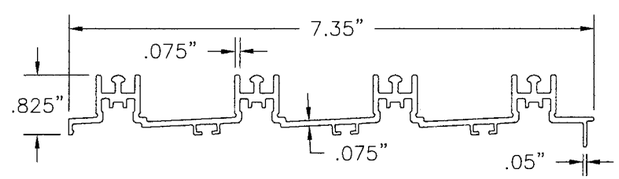


(15) 4 TRACK SILL INSERT
6063-T6 ALUM.

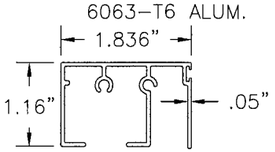


(22) PANEL STOP SILL COVER
6063-T6 ALUM.

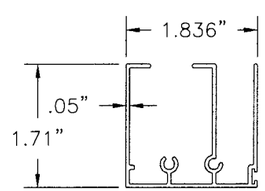


(23) PANEL STOP HEAD COVER
6063-T6 ALUM.

Approved as complying with the Florida Building Code
Date June 2, 2010
NOA# 09-0519.12
Miami Dade Product Control Division
By Ishag I. Chaut

WinDoor INCORPORATED
7500 AMSTERDAM DRIVE
ORLANDO, FL 32832
Phone: 407.481.8400
Fax: 407.481.0505
www.windoorinc.com

7000 SERIES LMI REINFORCED & NON-REINFORCED (5'0 x 8'2 PANEL) COMPONENTS

| DRAWN: | DWG NO. | REV |
|---|---|---|
| TJH | 08-00638 | D |
| SCALE NTS | DATE 12/10/08 | SHEET 17 OF 18 |

Luis R. Lomas
4/14/10

Luis R. Lomas P.E.
Florida No. 62514

| REVISIONS | | | |
|---|---|---|---|
| REV | DESCRIPTION | DATE | APPROVED |
| C | PER DADE LETTER DATED DEC. 21, 2009 | 01/19/10 | R.L. |
| D | PER DADE LETTER DATED MAR. 24, 2010 | 04/07/10 | R.L. |

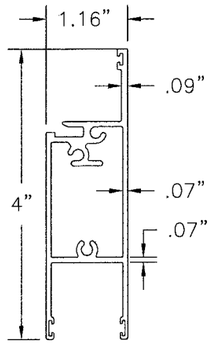


(24) TOP & BOTTOM RAIL
6063-T6 ALUM.

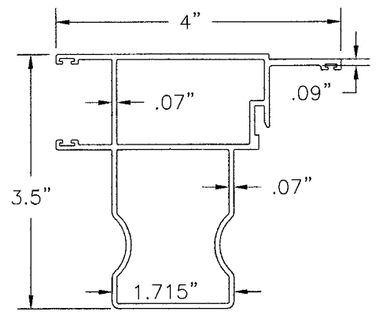


(29) LOCKING BUTT STILE
6063-T6 ALUM.

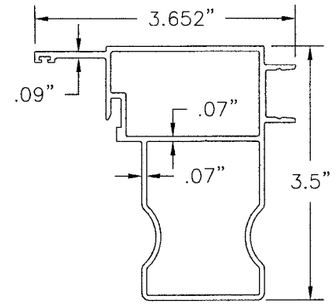


(28) MALE BUTT STILE
6063-T6 ALUM.

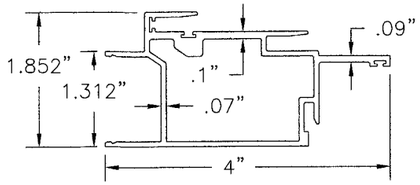


(27) INTERLOCK STILE RIGHT
6063-T6 ALUM.

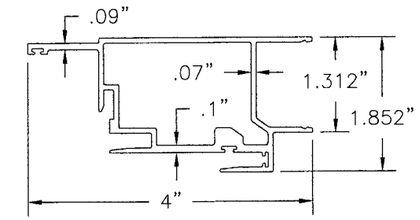


(26) INTERLOCK STILE LEFT
6063-T6 ALUM.

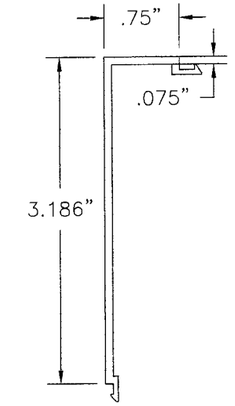


(20) HOOK STRIP WALL COVER
6063-T6 ALUM.

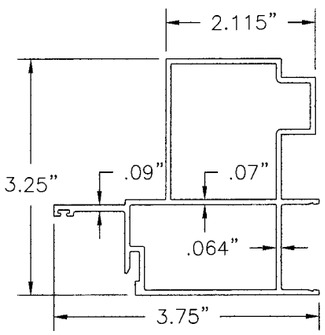


(30) INTERIOR FIXED BUTT STILE
6063-T6 ALUM.

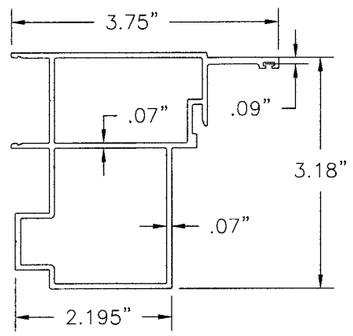


(31) EXTERIOR FIXED BUTT STILE
6063-T6 ALUM.

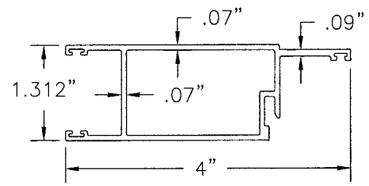


(25) LOCK/PLAIN STILE
6063-T6 ALUM.

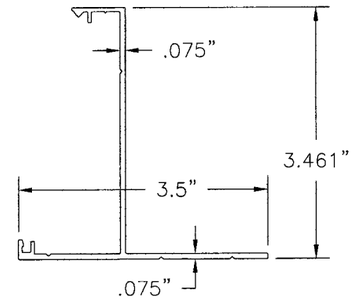


(21) HOOK STRIP WALL MOUNT
6063-T6 ALUM.

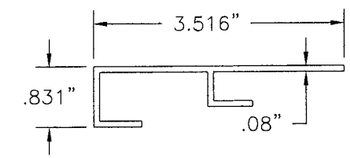


(19) HOOK STRIP BASE
6063-T6 ALUM.

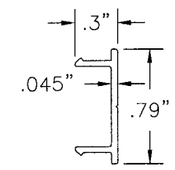


(18) FLUSH JAMB COVER
6063-T6 ALUM.

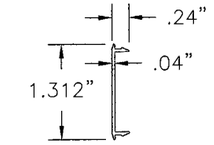


(33) BUTT STILE & INTERLOCK COVER
6063-T6 ALUM.

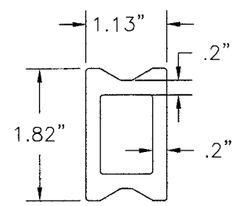


(32) INTERLOCK REINFORCING BAR
6063-T6 ALUM.

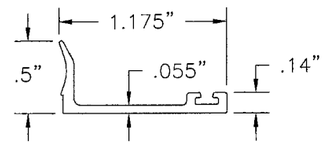


(35) 3/4" GLASS STOP
6063-T6 ALUM.

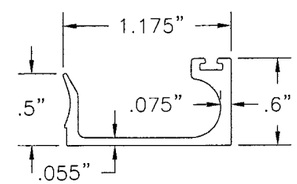


(34) 1/4" AND 3/16" GLASS STOP
6063-T6 ALUM.

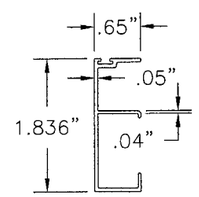


(17) RECESSED JAMB COVER
6063-T6 ALUM.

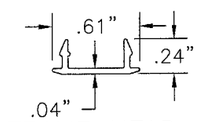


(16) FRAME HEAD TRACK COVER
6063-T6 ALUM.

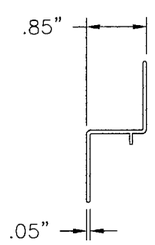


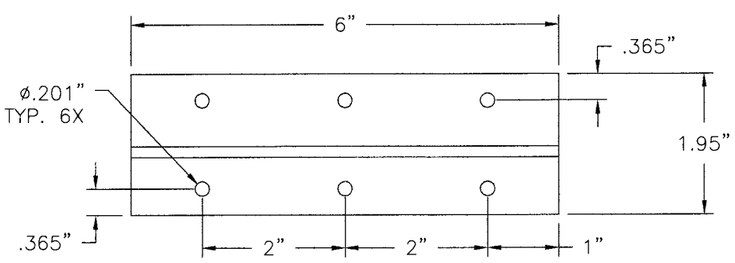


(72) FIXED PANEL Z-CLIP
6063-T6 ALUM.

Approved as complying with the Florida Building Code
Date JUNE 2, 2010
NOA# 09.0519.12
Miami Dade Product Control Division
By Islaq I. Uganda

WinDoor INCORPORATED
7500 AMSTERDAM DRIVE
ORLANDO, FL 32832
Phone: 407.481.8400
Fax: 407.481.0505
www.windoorinc.com

7000 SERIES LMI REINFORCED & NON-REINFORCED (5'0 x 8'2 PANEL) COMPONENTS

| DRAWN: | DWG NO. | REV |
|---|---|---|
| TJH | 08-00638 | D |
| SCALE NTS | DATE 12/10/08 | SHEET 18 OF 18 |

Luis R. Lomas
4/16/10
Luis R. Lomas P.E.
Florida No. 62514