MIAMI-DADE COUNTY
BUILDING CODE COMPLIANCE OFFICE (BCCO)
PRODUCT CONTROL DIVISION

MIAMI-DADE COUNTY, FLORIDA
METRO-DADE FLAGLER BUILDING
140 WEST FLAGLER STREET, SUITE 1603
MIAMI, FLORIDA 33130-1563
(305) 375-2901 FAX (305) 372-6339
www.miamidade.gov/buildingcode

NOTICE OF ACCEPTANCE (NOA)

The Airolite Company, LLC
27855 State Route 7
Marietta, OH 45750

SCOPE:

This NOA is being issued under the applicable rules and regulations governing the use of construction materials. The documentation submitted has been reviewed by Miami-Dade County Product Control Division and accepted by the Board of Rules and Appeals (BORA) to be used in Miami Dade County and other areas where allowed by the Authority Having Jurisdiction (AHJ).

This NOA shall not be valid after the expiration date stated below. The Miami-Dade County Product Control Division (In Miami Dade County) and/or the AHJ (in areas other than Miami Dade County) reserve the right to have this product or material tested for quality assurance purposes. If this product or material fails to perform in the accepted manner, the manufacturer will incur the expense of such testing and the AHJ may immediately revoke, modify, or suspend the use of such product or material within their jurisdiction. BORA reserves the right to revoke this acceptance, if it is determined by Miami-Dade County Product Control Division that this product or material fails to meet the requirements of the applicable building code.

This product is approved as described herein, and has been designed to comply with the Florida Building Code, including the High Velocity Hurricane Zone.

DESCRIPTION: Model K605MD Aluminum Louver

APPROVAL DOCUMENT: Drawing No. **K605MD**, titled "K605MD Louver", Sheets 1 through 16 of 16, dated 04/27/09, prepared by The Airolite Company, LLC, signed and sealed by Chander P. Nangia, P.E., bearing the Miami-Dade County Product Control approval stamp with the Notice of Acceptance number and approval date by the Miami-Dade County Product Control Division.

MISSILE IMPACT RATING: Large and Small Missile Impact Resistant

LABELING: Each unit shall bear a permanent label with the manufacturer's name:

The Airolite Company, LLC	The Airolite Company, LLC
525 Western Road	1020 Hoover Blvd.
Schofield, WI 54476	Frankfort, KY 40601

and following statement: "Miami-Dade County Product Control Approved", unless otherwise noted herein.

RENEWAL of this NOA shall be considered after a renewal application has been filed and there has been no change in the applicable building code negatively affecting the performance of this product.

TERMINATION of this NOA will occur after the expiration date or if there has been a revision or change in the materials, use, and/or manufacture of the product or process. Misuse of this NOA as an endorsement of any product, for sales, advertising or any other purposes shall automatically terminate this NOA. Failure to comply with any section of this NOA shall be cause for termination and removal of NOA.

ADVERTISEMENT: The NOA number preceded by the words Miami-Dade County, Florida, and followed by the expiration date may be displayed in advertising literature. If any portion of the NOA is displayed, then it shall be done in its entirety.

INSPECTION: A copy of this entire NOA shall be provided to the user by the manufacturer or its distributors and shall be available for inspection at the job site at the request of the Building Official.

This NOA consists of this page 1 and evidence page E-1, as well as approval document mentioned above.

The submitted documentation was reviewed by **Carlos M. Utrera, P.E.**

MIAMI-DADE COUNTY APPROVED

7/14/09

NOA No. 09-0519.15
Expiration Date: August 05, 2014
Approval Date: August 05, 2009

NOTICE OF ACCEPTANCE: EVIDENCE SUBMITTED

A. DRAWINGS

1. Drawing No. **K605MD**, titled "K605MD Louver", Sheets 1 through 16 of 16, dated 04/27/09, prepared by The Airolite Company, LLC, signed and sealed by Chander P. Nangia, P.E.

B. TESTS

1. Test report on 1) Uniform Static Air Pressure Test per FBC, TAS 202-94
   2) Large Missile Impact Test per FBC, TAS 201-94,
   3) Cyclic Wind Pressure Test per FBC, TAS 203-94,
   along with marked-up drawings and installation diagram of Model ESS-502D, fixed aluminum louvers, prepared by Architectural Testing, Inc., Test Report No. **89882.01-602-18**, dated 04/30/09, signed and sealed by Joseph A. Reed, P.E.

C. CALCULATIONS

1. Structural load calculations, prepared by Greenheck Fan Corporation, dated 04/14/09, signed and sealed by Chander P. Nangia, P.E.

D. QUALITY ASSURANCE

1. Miami Dade Building Code Compliance Office (BCCO)

E. MATERIAL CERTIFICATIONS

1. None.

F. STATEMENTS

1. Code compliance letter issued by Design Dynamics, Inc., dated 04/27/09, signed and sealed by Chander P. Nangia, P.E.
2. No financial interest letter issued by Design Dynamics, Inc., dated 04/27/09, signed and sealed by Chander P. Nangia, P.E.

7/14/09

Carlos M. Utrera, P.E.
Product Control Examiner
NOA No. 09-0519.15
Expiration Date: August 05, 2014
Approval Date: August 05, 2009

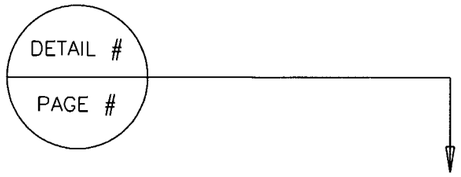

DETAIL CALLOUT (TYPICAL)

1 LOUVER ELEV.
SHORT LOUVER LAYOUT

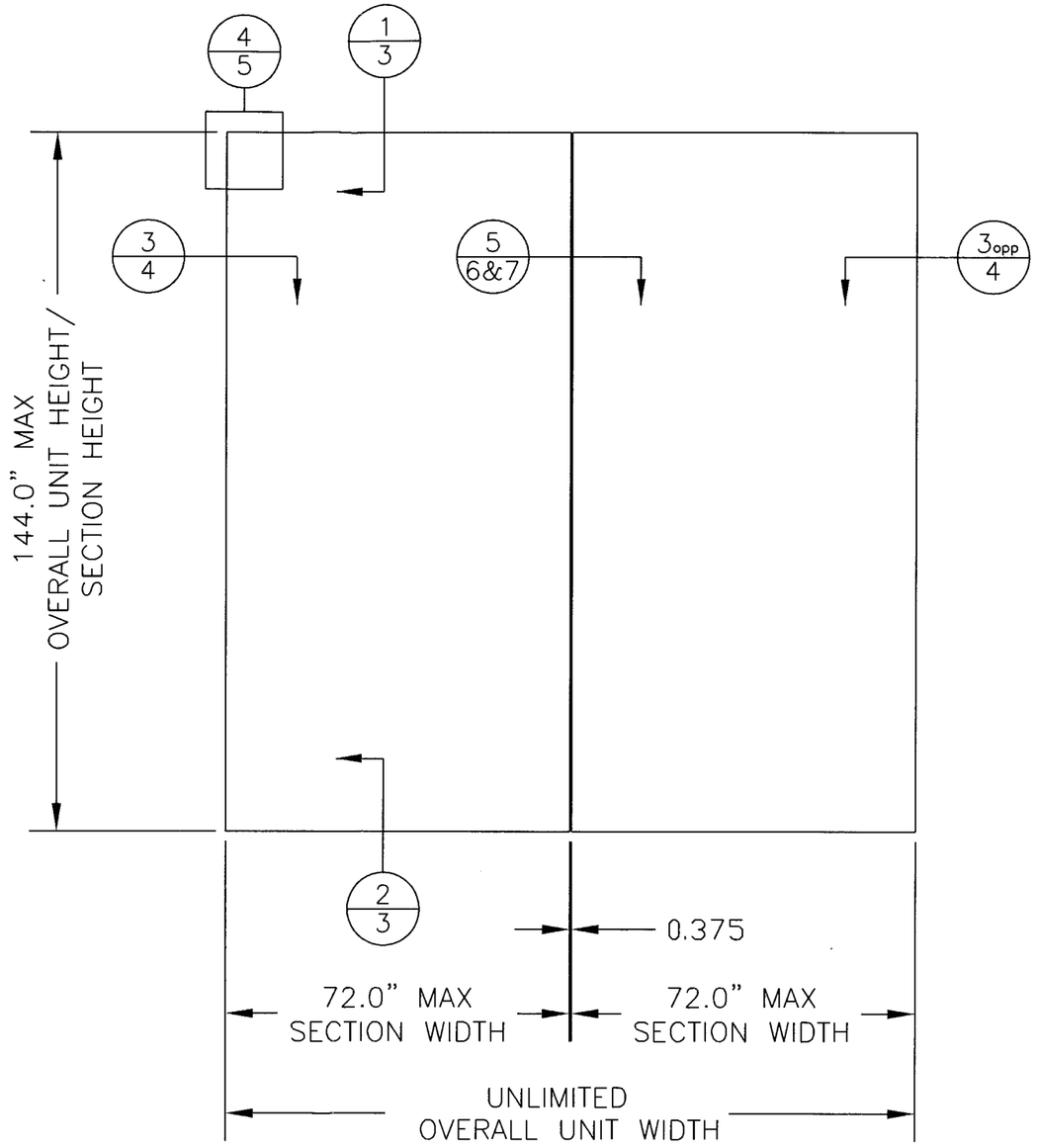

NOTE: MULLION REQUIRED ONLY IF BOTH OF THE FOLLOWING ARE TRUE: OVERALL UNIT WIDTH IS >72", AND SECTION HEIGHT IS >72"

CHANDER P. NANGIA PE.
7423 HOLLOW RIDGE DR.
HOUSTON, TX 77095
FLORIDA PE # 21938

DRAWN BY M STEELE
DATE 4/27/09
SCALE 3/8":1'
SHEET NO. 1 OF 16
CAD DRAWING NO. K605MD

AIROLITE
The look that works.™
SCHOFIELD, WISCONSIN 54476
715-359-6171

TITLE
K605MD LOUVER
SHORT LOUVER LAYOUT
ELEVATION CONFIGURATION

MAY 12 2009

Approved as complying with the Florida Building Code
Date 08/05/2009
NOA# 09-0519.15
Miami Dade Product Control Division
By

2 LOUVER ELEV.
LONG LOUVER LAYOUT

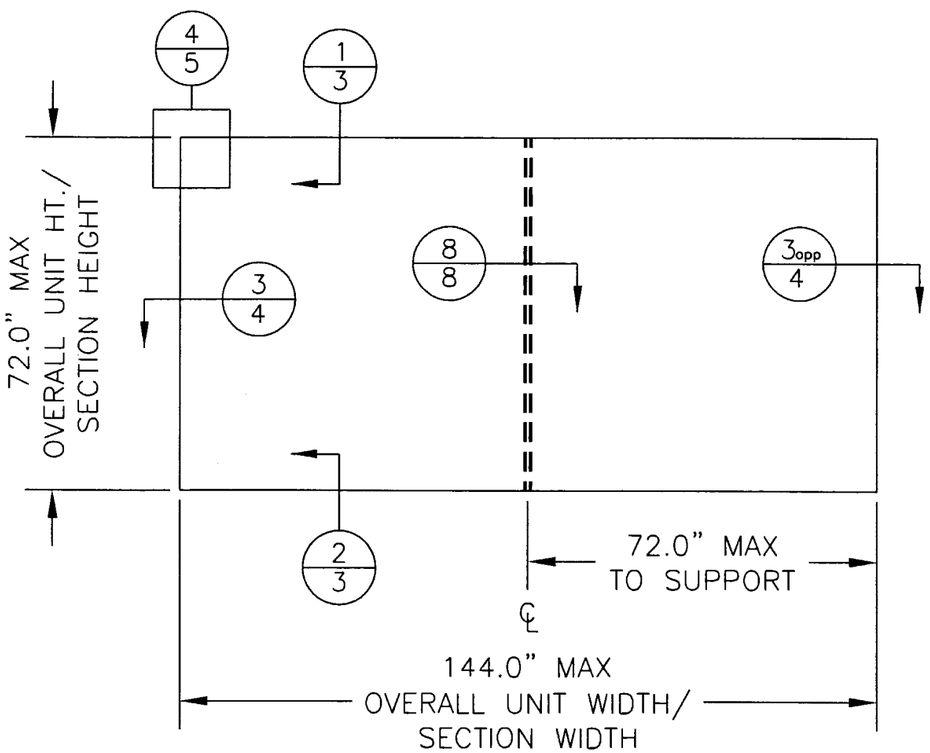

NOTE: BLADE SUPPORT REQUIRED ONLY IF SECTION WIDTH IS >72".

3 LOUVER ELEV.
LONG LOUVER LAYOUT, SPLICED JAMBS & BLADE SUPPORT

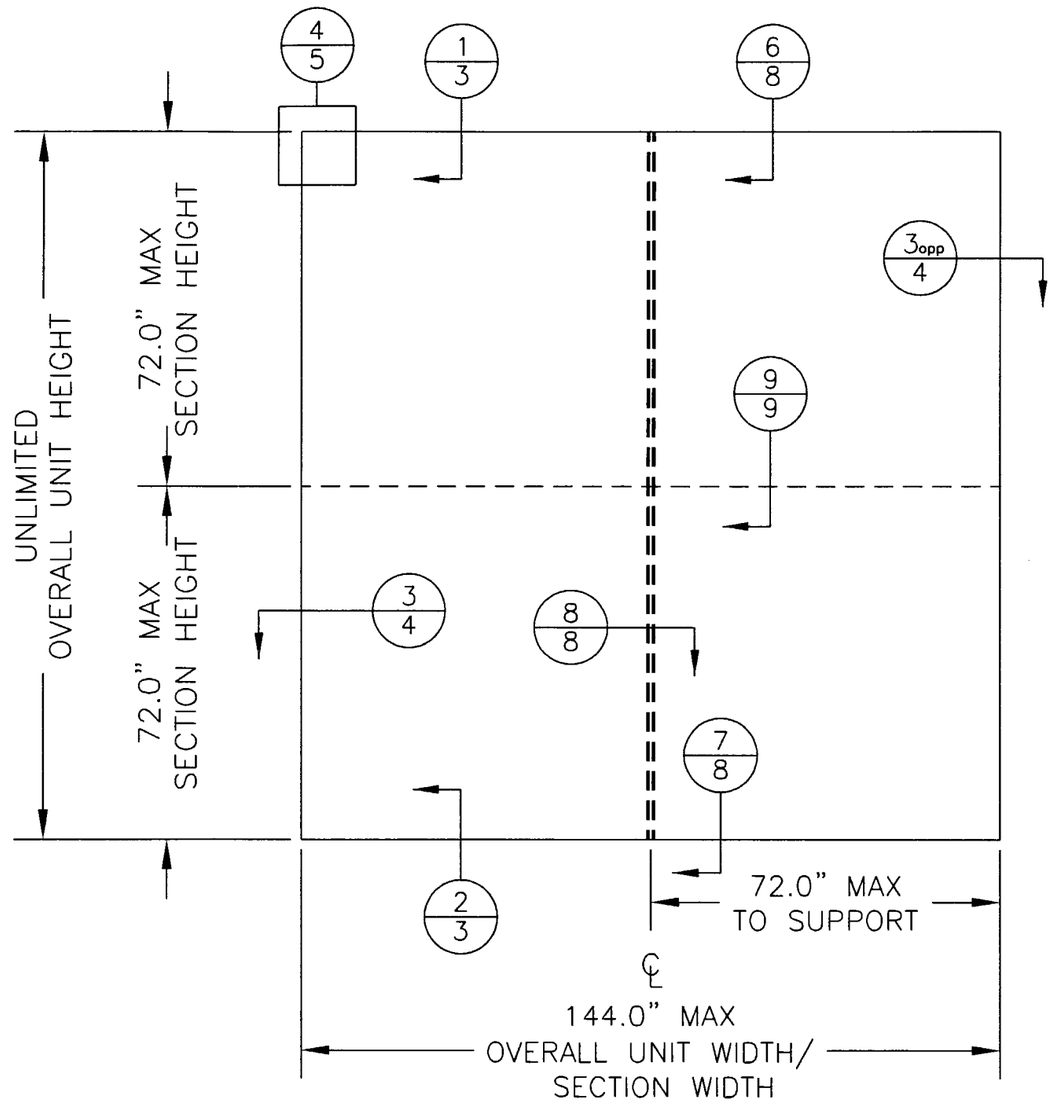

NOTE: BLADE SUPPORT REQUIRED ONLY IF SECTION WIDTH IS >72".

CHANDER P. NANGIA P.E.
7423 HOLLOW RIDGE DR.
HOUSTON, TX 77095
FLORIDA PE # 21938

DRAWN BY M STEELE	DATE 4/27/09
SCALE 3/8":1'	
SHEET NO. 2 OF 16	
CAD DRAWING NO. K605MD	

AIROLITE
The look that works™
SCHOFIELD, WISCONSIN 54476
715-359-6171

TITLE
K605MD LOUVER
LONG LOUVER LAYOUT
ELEVATION CONFIGURATIONS

MAY 12 2009

Approved as complying with the Florida Building Code
Date 08/05/2009
NOA# 09-0519.15
Miami Dade Product Control Division
By

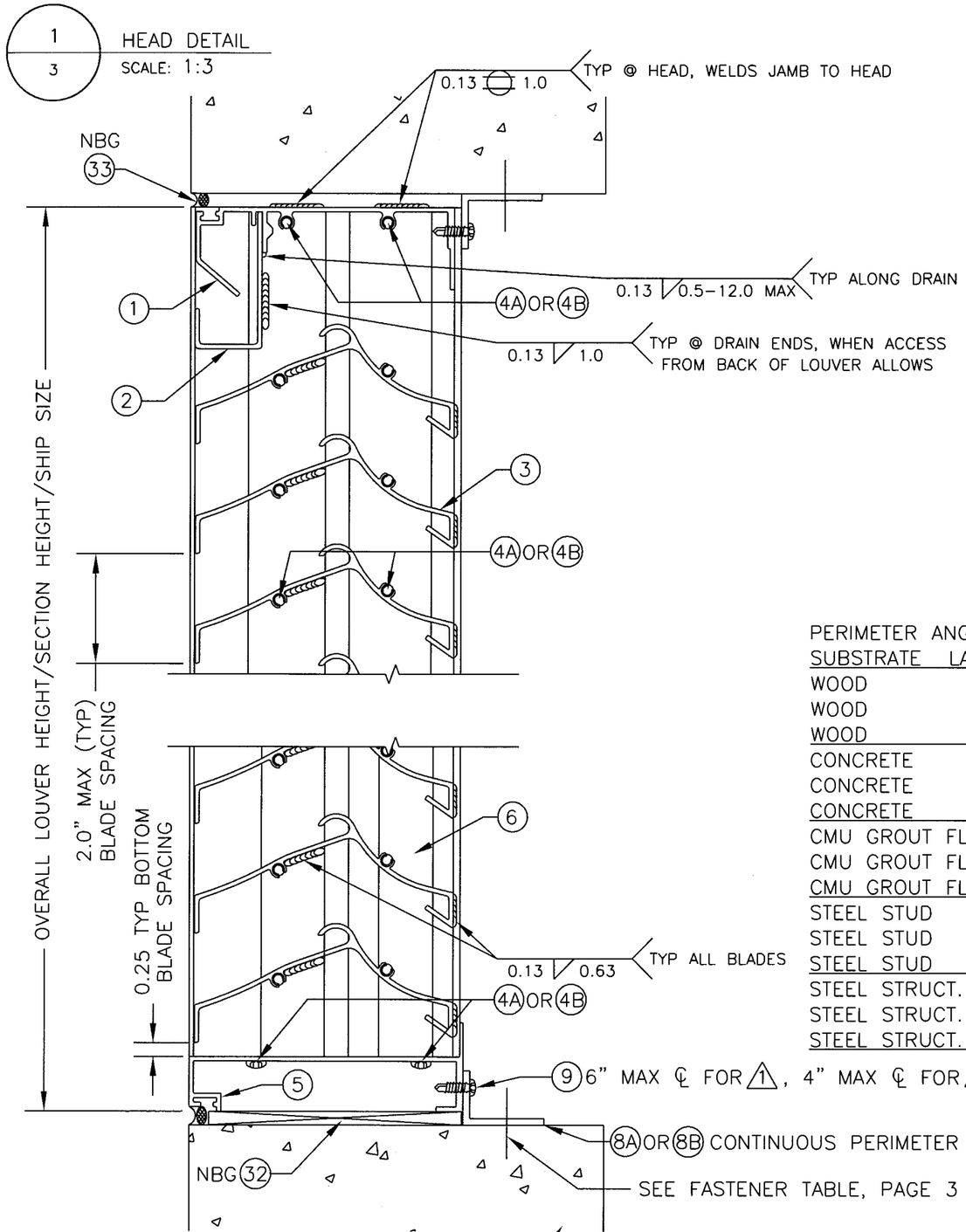

NOTE FOR CMU: BLOCK IS GROUT FILLED AROUND OPENING. (MIN 2000PSI)

OPTIONAL CONTINUOUS ANGLE CONFIGURATION, FOR THIS PAGE ONLY

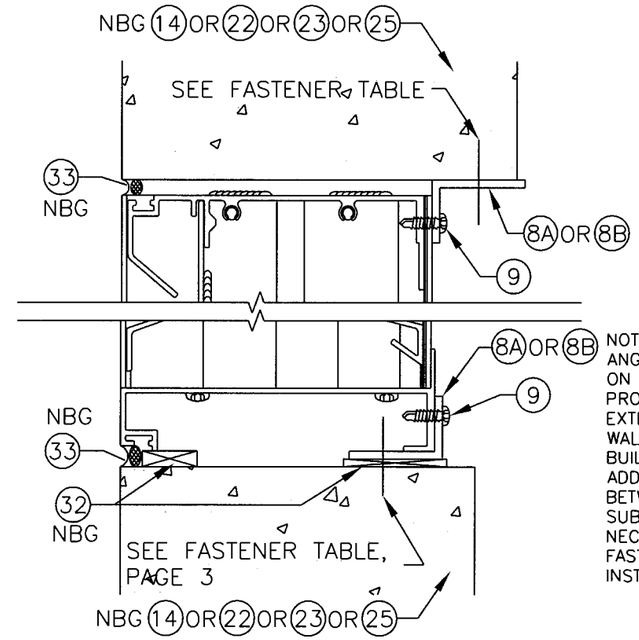

NOTE: CONTINUOS PERIMETER ANGLE MAY BE POSITIONED ON JAMBS WITH ANGLE LEG PROJECTED TOWARD EXTERIOR OR INTERIOR OF WALL. VALID FOR ALL BUILDING SUBSTRATE TYPES. ADDITIONAL SPACING BETWEEN LOUVER AND SUBSTRATE MAY BE NECESSARY DUE TO FASTENER HEAD-LOUVER INSTALLATION CLEARANCE.

PERIMETER ANGLE SUBSTRATE FASTENER TABLE (FASTENERS NOT BY MANUFACTURER):

SUBSTRATE	LAYOUT	"Δ" MIN	FASTENER	SPACING & MIN EDGE DISTANCE
WOOD	1	G=0.55	27	9" O.C. MAX, 1.5" MIN WOOD EDGE DISTANCE
WOOD	2	G=0.55	27	4" O.C. MAX, 1.5" MIN WOOD EDGE DISTANCE
WOOD	3	G=0.55	27	4" O.C. MAX, 1.5" MIN WOOD EDGE DISTANCE
CONCRETE	1	2000PSI	21	6" O.C. MAX, 1.5" MIN CONCRETE EDGE DISTANCE
CONCRETE	2	2000PSI	21	3" O.C. MAX, 1.5" MIN CONCRETE EDGE DISTANCE
CONCRETE	3	2000PSI	21	3" O.C. MAX, 1.5" MIN CONCRETE EDGE DISTANCE
CMU GROUT FLD.	1	2000PSI	21	6" O.C. MAX, 1.5" MIN CMU EDGE DISTANCE
CMU GROUT FLD.	2	2000PSI	21	3" O.C. MAX, 1.5" MIN CMU EDGE DISTANCE
CMU GROUT FLD.	3	2000PSI	21	3" O.C. MAX, 1.5" MIN CMU EDGE DISTANCE
STEEL STUD	1	14GA	24	6" O.C. MAX, 0.5" MIN STEEL EDGE DISTANCE
STEEL STUD	2	14GA	24	3" O.C. MAX, 0.5" MIN STEEL EDGE DISTANCE
STEEL STUD	3	14GA	24	3" O.C. MAX, 0.5" MIN STEEL EDGE DISTANCE
STEEL STRUCT.	1	0.375	24	6" O.C. MAX, 0.5" MIN STEEL EDGE DISTANCE
STEEL STRUCT.	2	0.375	24	3" O.C. MAX, 0.5" MIN STEEL EDGE DISTANCE
STEEL STRUCT.	3	0.375	24	3" O.C. MAX, 0.5" MIN STEEL EDGE DISTANCE

NBG=NOT BY MANUFACTURER

CHANDER P. NANGIA P.E.
7423 HOLLOW RIDGE DR.
HOUSTON, TX 77095
FLORIDA PE # 21938

DATE 4/27/09
DRAWN BY M STEELE
SCALE 1:2.5
SHEET NO. 3 OF 16
CAD DRAWING NO. K605MD

AIROLITE
The look that works.™
SCHOFIELD, WISCONSIN 54476
715-359-6171

TITLE K605MD LOUVER DETAILS - HEAD/SILL

MAY 12 2009

Approved as complying with the Florida Building Code
Date 08/05/2009
NOA# 09-0519.15
Miami Dade Product Control Division
By

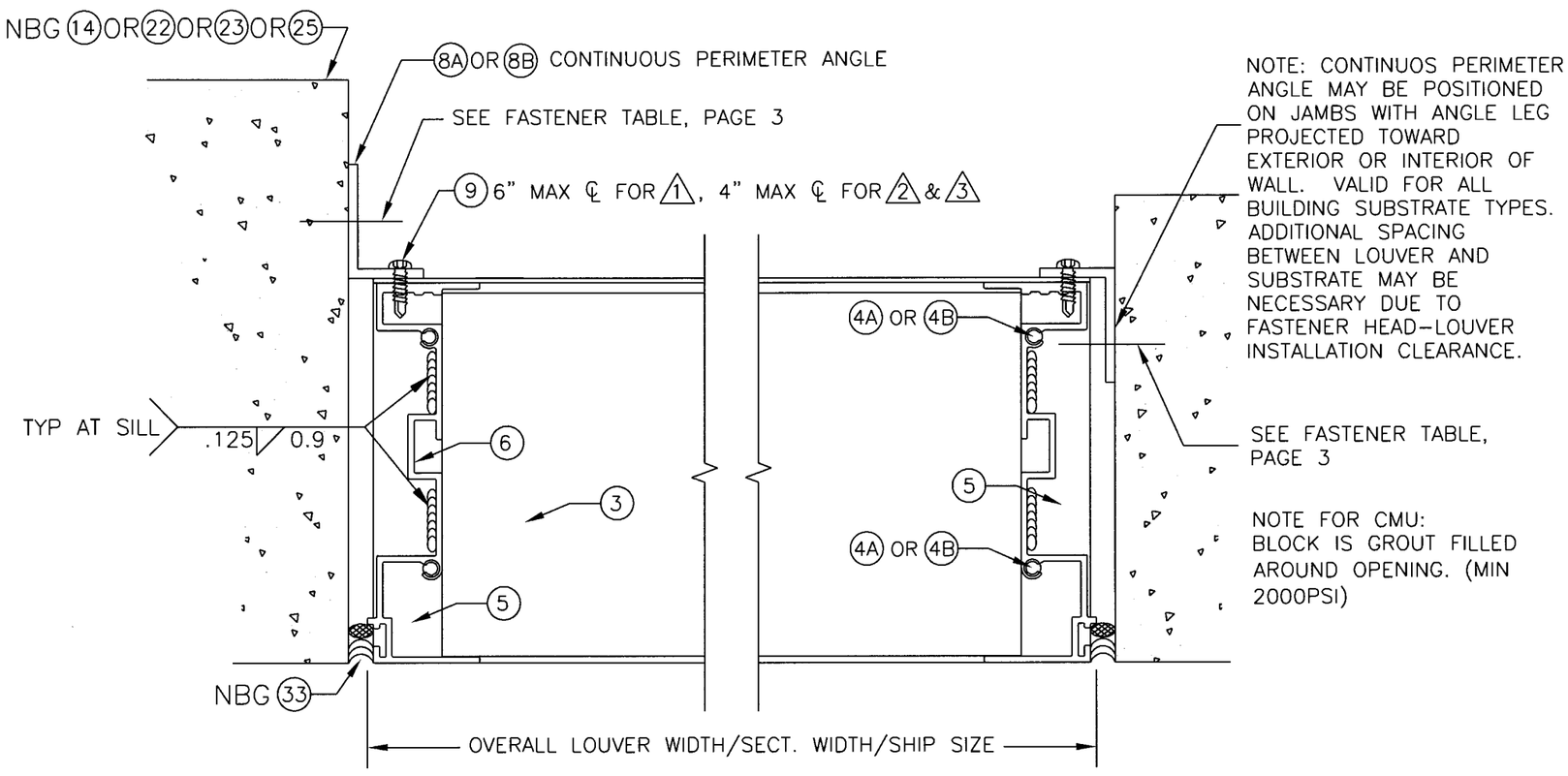

NBG=NOT BY MANUFACTURER

3 / 4 JAMB DETAIL
SCALE: 1:2
SEE "3 ISO" FOR ISOMETRIC DETAIL

3opp / 4 JAMB DETAIL
SCALE: 1:2

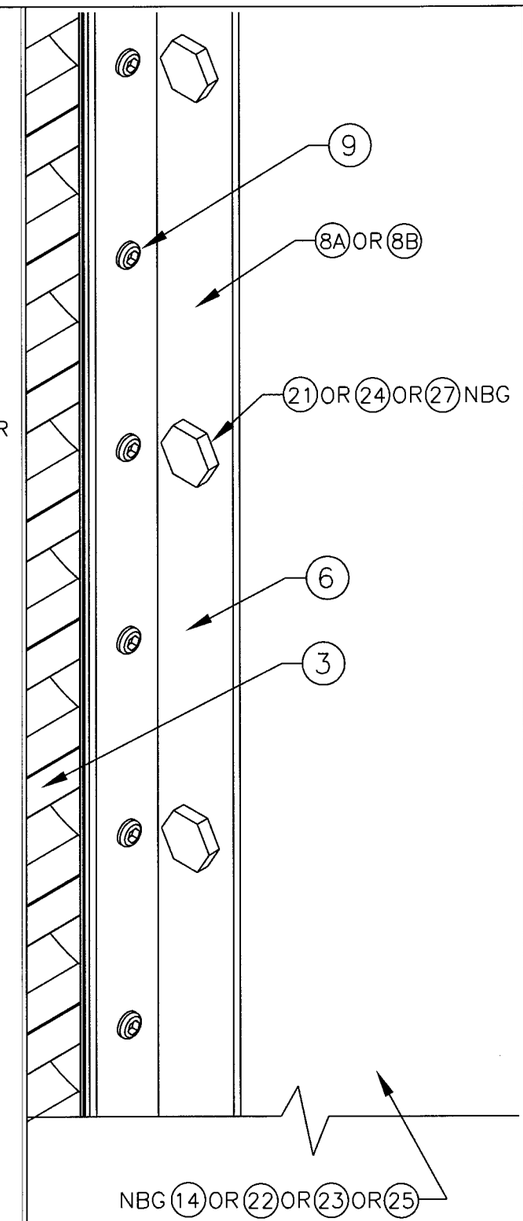

3 ISO / 4 JAMB DETAIL
SCALE: 1:2

CHANDER P. NANGIA, P.E.
7423 HOLLOW RIDGE DR.
HOUSTON, TX 77095
FLORIDA PE # 21938

DRAWN BY M STEELE
DATE 4/27/09
SCALE 1:2
SHEET NO. 4 OF 16
CAD DRAWING NO. K605MD

AIROLITE
The look that works.™
SCHOFIELD, WISCONSIN 54476
715-359-6171

TITLE K605MD LOUVER DETAILS - JAMBS

MAY 12 2009

Approved as complying with the Florida Building Code
Date 08/05/2009
NOA# 09-0519.15
Miami Dade Product Control Division
By

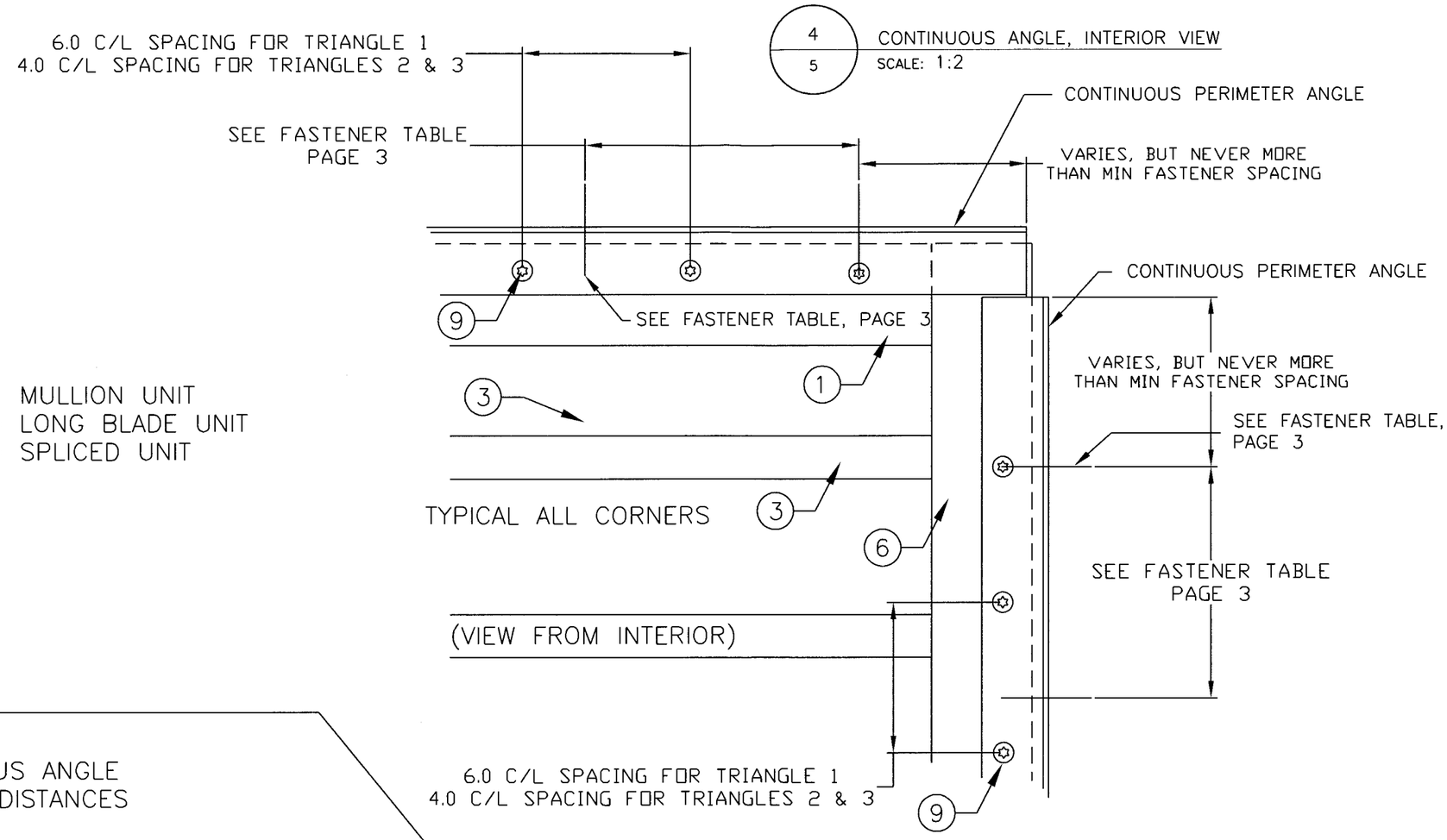

CONTINUOUS ANGLE
FASTENER DISTANCES

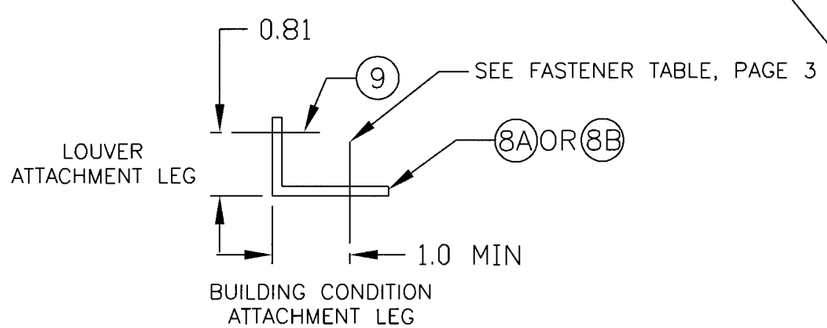

(BUILDING CONDITION NOT SHOWN)

CHANDER P. NANGIA P.E.
7423 HOLLOW RIDGE DR.
HOUSTON, TX 77095
FLORIDA PE # 21938

DATE	4/27/09
DRAWN BY	M STEELE
SCALE	1:2
SHEET NO.	5 OF 16
CAD DRAWING NO.	K605MD

AIROLITE
The look that works.™
SCHOFIELD, WISCONSIN 54476
715-359-6171

TITLE: K605MD LOUVER

DETAILS – CONTINIOUS ANGLE

MAY 12 2009

Approved as complying with the Florida Building Code
Date 08/05/2009
NOA# 07-0517.15
Miami Dade Product Control Division
By

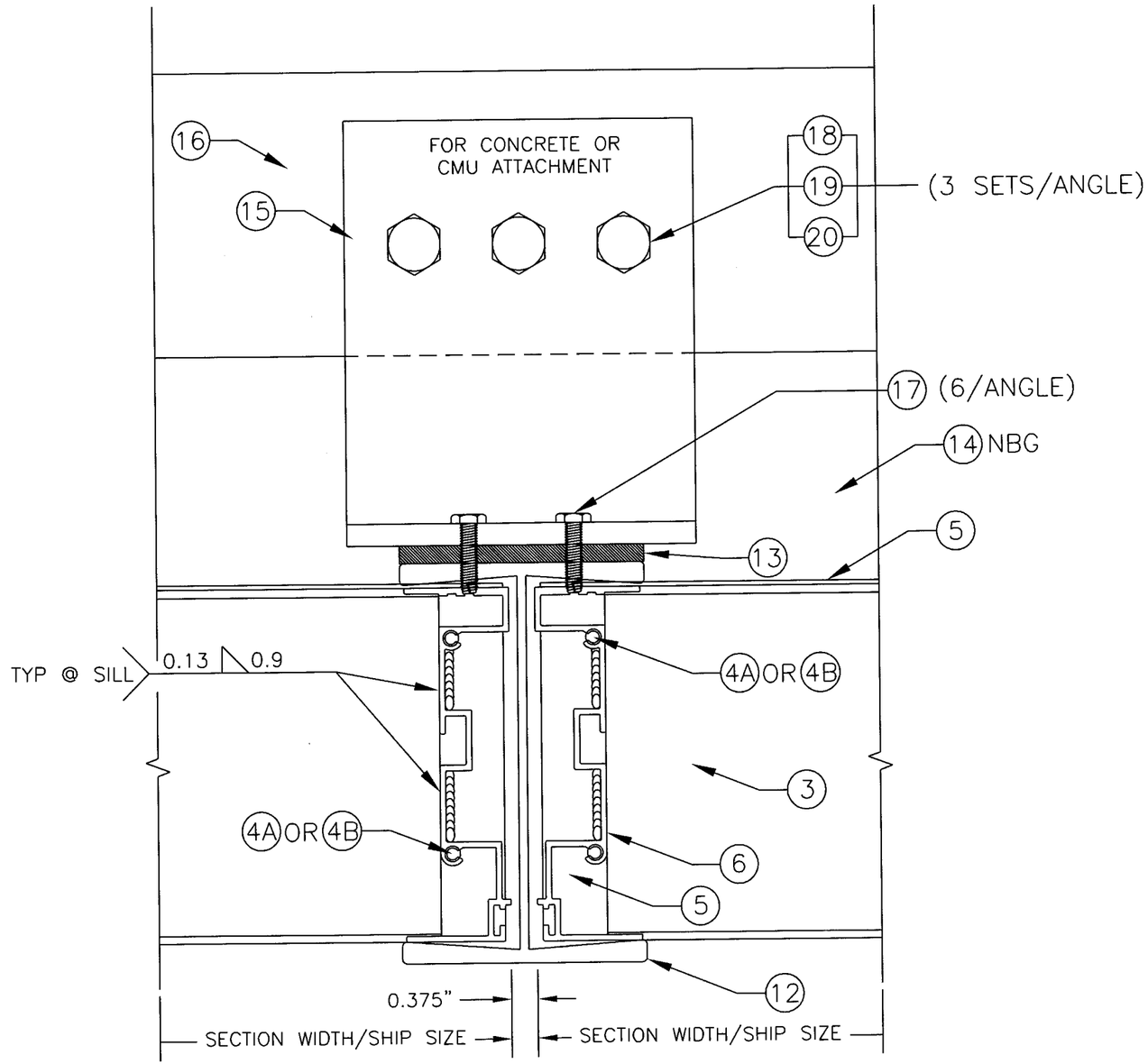

5A / 6 "I" MULLION DETAIL

SCALE: 1:2

SEE "5 ISO" FOR ISOMETRIC DETAIL

NBG=NOT BY MANUFACTURER

NOTE: CONTINUOUS PERIMETER ANGLE NOT SHOWN ON THIS PAGE.

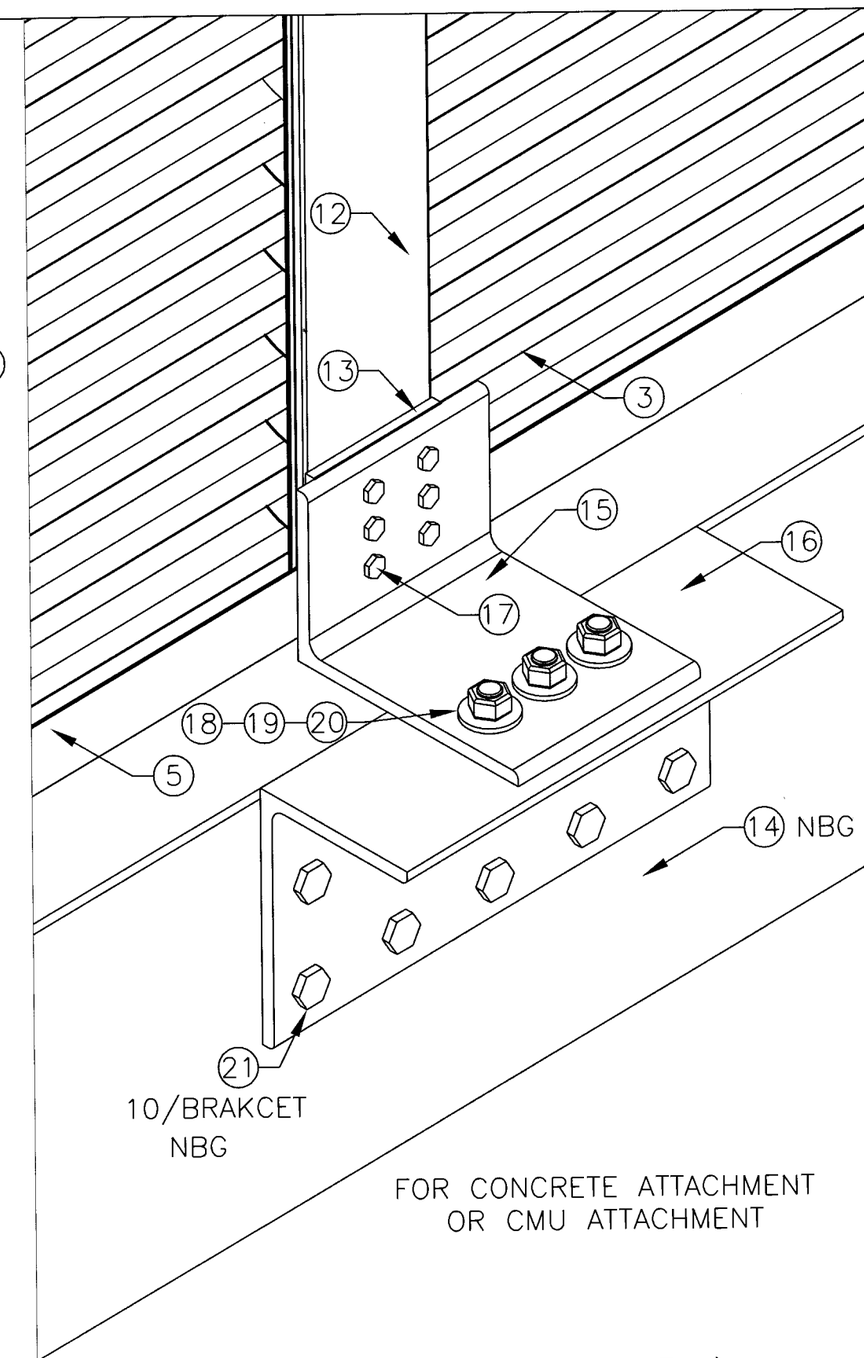

5A ISO / 6 ISOMETRIC (MULLION DETAIL)
(TYPICAL @HEAD AND SILL)

SCALE: 1:3

CHANDER P. NANGIA P.E.
7423 HOLLOW RIDGE DR.
HOUSTON, TX 77095
FLORIDA PE # 21938

DRAWN BY M STEELE	DATE 4/27/09
SCALE VARIES	
SHEET NO. 6 OF 16	CAD DRAWING NO. K605MD

AIROLITE
The look that works™
SCHOFIELD, WISCONSIN 54476
715-359-6171

TITLE K605MD LOUVER DETAILS - CMU & CONCRETE MULLION SUPPORT

MAY 12 2009

Approved as complying with the Florida Building Code
Date 08/05/2009
NOA# 09-0519.15
Miami Dade Product Control Division
By

5 B / 7 STEEL MULLION ATTACHMENT 1
SCALE: 1:2

FOR STRUCTURAL STEEL OR STEEL STUD ATTACHMENT
OPTION ONE

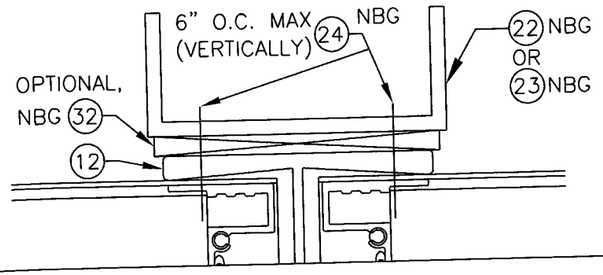

FOR STRUCTURAL STEEL OR STEEL STUD ATTACHMENT
OPTION TWO

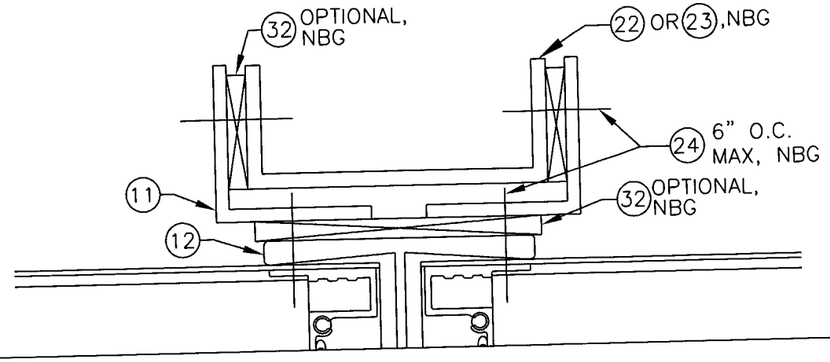

5 C / 7 STEEL MULLION ATTACHMENT 2
SCALE: 1:2

NOTE: STRUCTURAL STEEL AND STEEL STUD MULLION SUPPORT TYPES (NOT BY GREENHECK) MUST BE CAPABLE OF WITHSTANDING ALL LOADS TRANSFERRED BY THE LOUVER SECTIONS AT THE TOP AND BOTTOM OF THE VERTICAL MULLION CONDITION(S). THE FORMULA TO DETERMINE THE TRANSFERRED POINT LOAD IN POUNDS IS (SECTION WIDTH FEET X SECTION HEIGHT FEET X 110 PSF)/2.

5 D / 7 WOOD MULLION ATTACHMENT
SCALE: 1:2
SEE "5 D ISO" FOR ISOMETRIC DETAIL

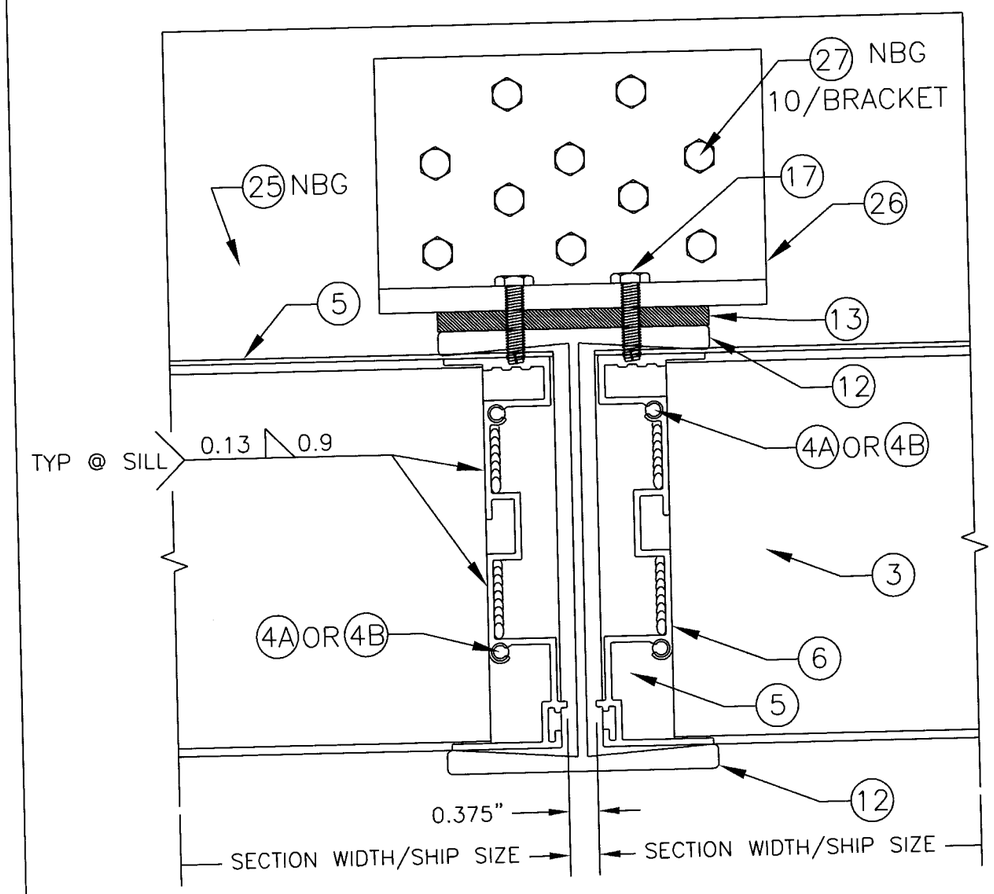

NOTE: CONTINUOUS PERIMETER ANGLE NOT SHOWN ON THIS PAGE.

NBG=NOT BY MANUFACTURER

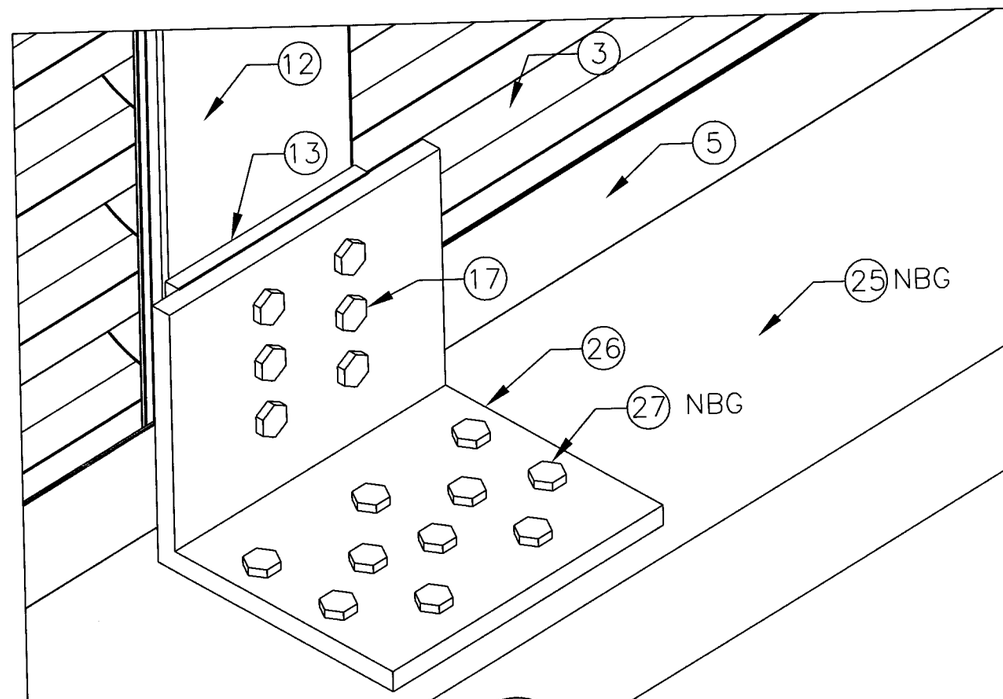

5 D ISO / 7 WOOD MULLION ATTACHMENT
SCALE: 1:2

CHANDER P. NANGIA P.E.
7423 HOLLOW RIDGE DR.
HOUSTON, TX 77095
FLORIDA PE # 21938

DRAWN BY M STEELE	DATE 4/27/09
SCALE 1:2	
SHEET NO. 7 OF 16	
CAD DRAWING NO. K605MD	

AIROLITE
The look that works.™
SCHOFIELD, WISCONSIN 54476
715-359-6171

TITLE K605MD LOUVER DETAILS - STEEL STUD, STRUCTURAL STEEL, & WOOD MULLION SUPPORT

MAY 12 2009

Approved as complying with the Florida Building Code
Date 08/05/2009
NOA# 09-0529.15
Miami Dade Product Control Division
By

6/8 BLADE SUPPORT HEAD DETAIL (SECTIONS >72" WIDE) SIDE VIEW
SCALE: 1:2

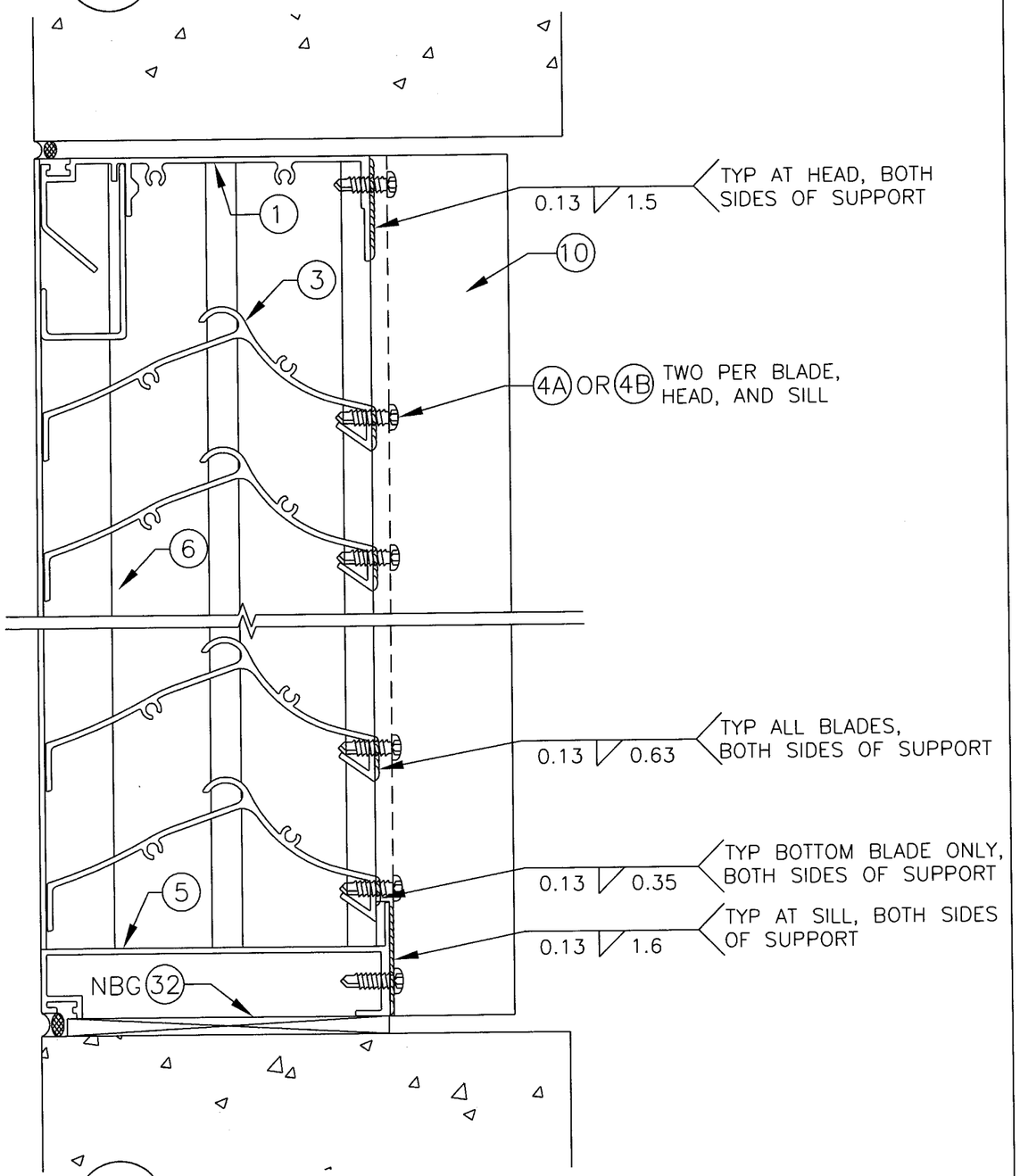

7/8 BLADE SUPPORT SILL DETAIL (SECTIONS >72" WIDE) SIDE VIEW
SCALE: 1:2

NBG=NOT BY MANUFACTURER

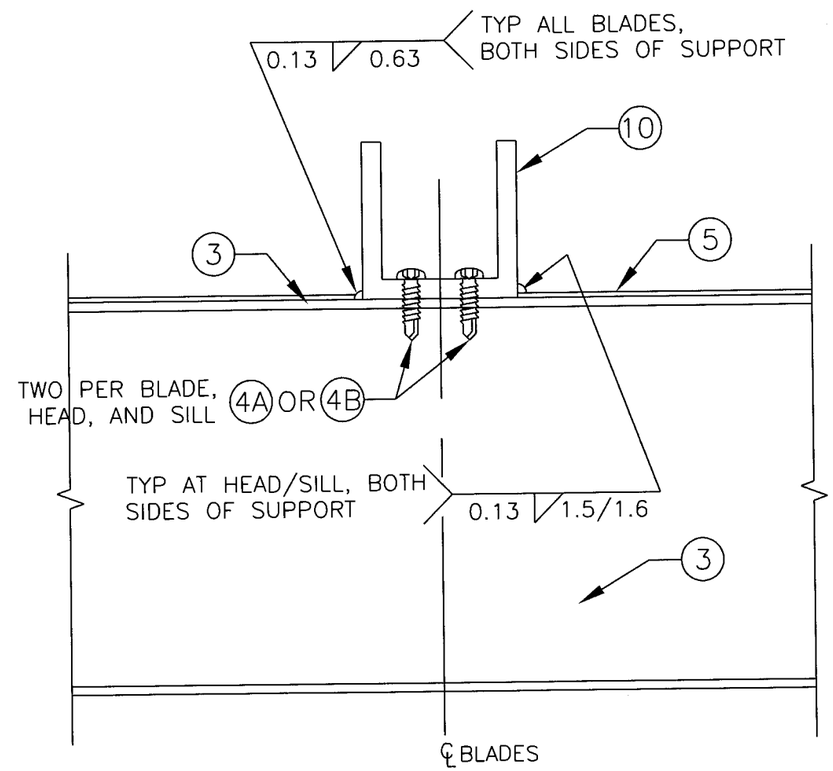

8/8 BLADE SUPPORT DETAIL (SECTIONS >72" WIDE) TOP VIEW
SCALE: 1:2

CHANDER P. NANGIA P.E.
7423 HOLLOW RIDGE DR.
HOUSTON, TX 77095
FLORIDA PE # 21938

DRAWN BY M STEELE
DATE 4/27/09
SCALE 1:2
SHEET NO. 8 OF 16
CAD DRAWING NO. K605MD

AIROLITE
The look that works™
SCHOFIELD, WISCONSIN 54476
715-359-6171

TITLE K605MD LOUVER DETAILS - BLADE SUPPORT

MAY 12 2009

Approved as complying with the Florida Building Code
Date 08/05/2009
NOA# 09-0519.15
Miami Dade Product Control Division
By

9 / 9 VERTICAL SPLICE/STACK DETAIL

SCALE: 1:2

SEE "9 ISO" FOR ISOMETRIC DETAIL

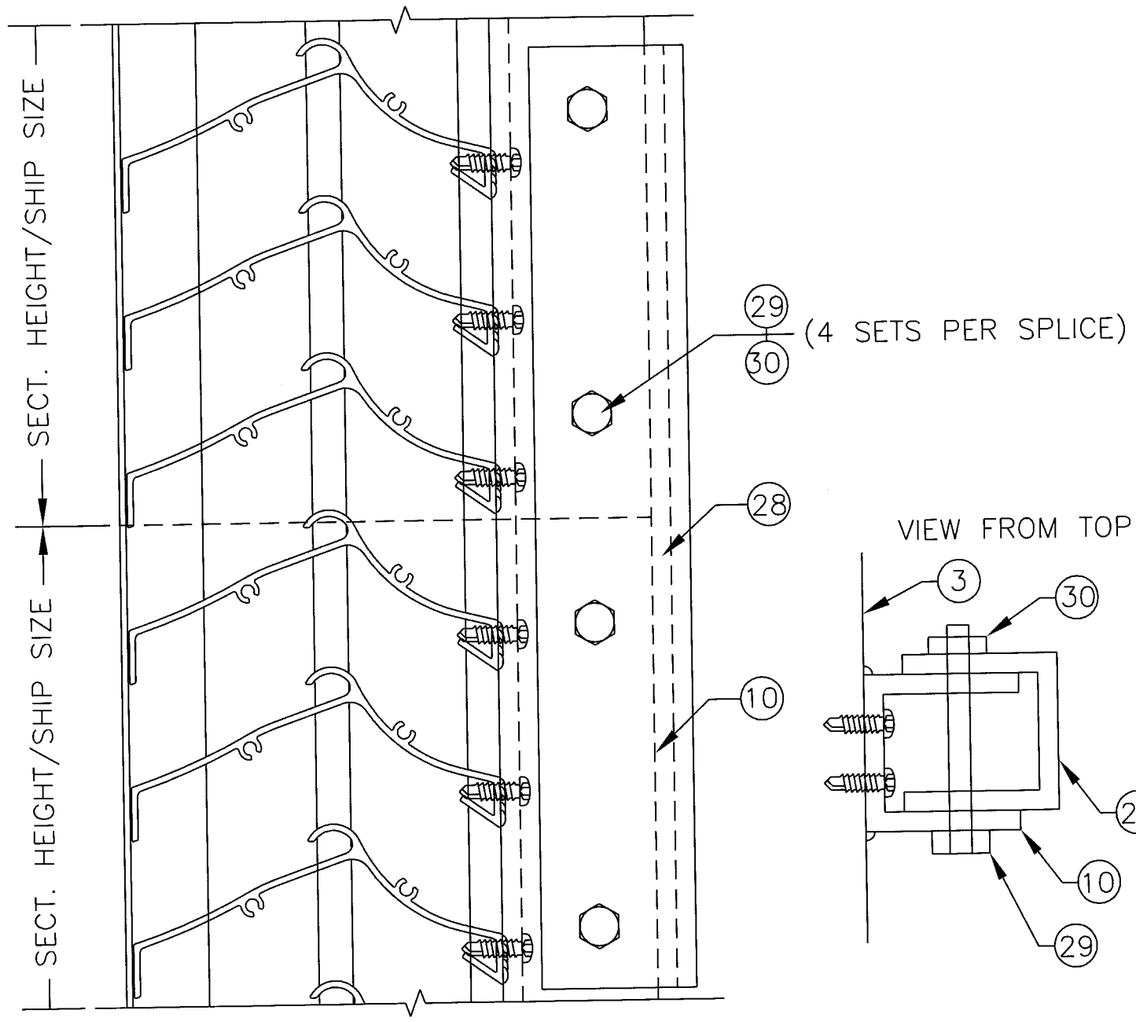

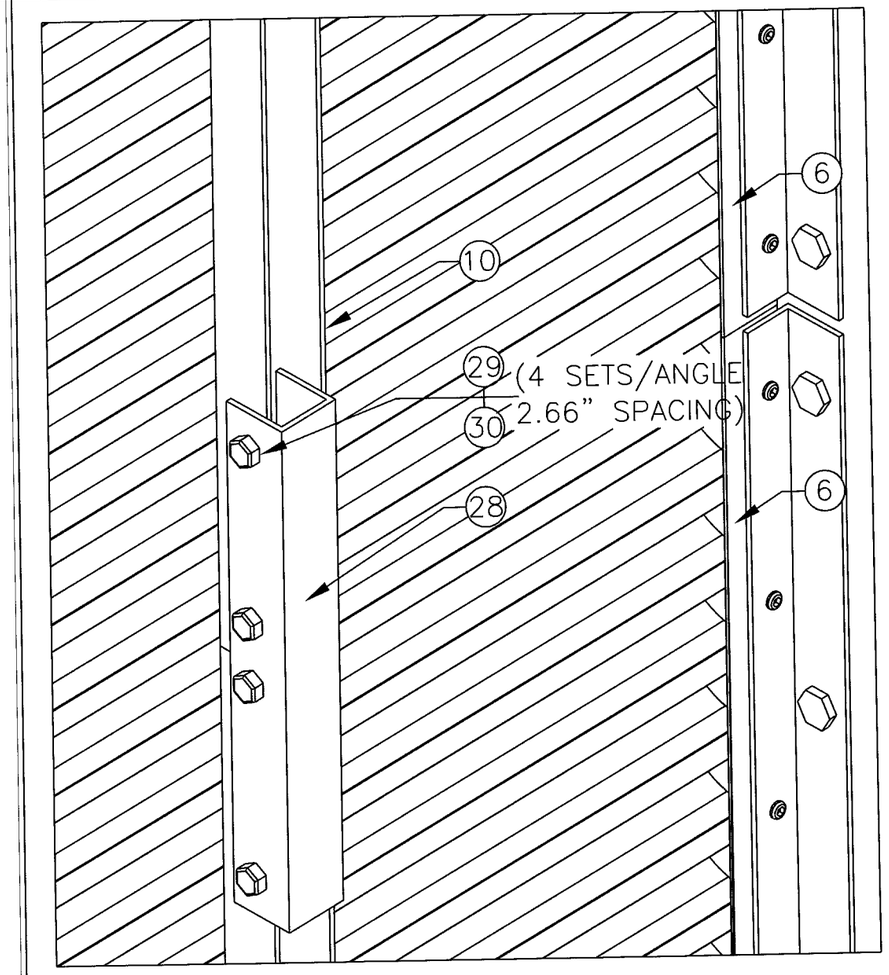

9 ISO / 9 ISOMETRIC (SPLICE/STACK DETAIL)

SCALE: 1:3

CHANDER P. NANGIA, P.E.
7423 HOLLOW RIDGE DR.
HOUSTON, TX 77095
FLORIDA PE # 21938

AIROLITE
The look that works™
SCHOFIELD, WISCONSIN 54476
715-359-6171

DRAWN BY M STEELE	DATE 4/27/09
SCALE VARIES	SHEET NO. 9 OF 16
TITLE K605MD LOUVER DETAILS - SPLICED BLADE SUPPORT	CAD DRAWING NO. K605MD

MAY 12 2009

Approved as complying with the Florida Building Code
Date 08/05/2009
NOA# 09-0519.15
Miami Dade Product Control Division
By

BELOW ARE THE SHAPE UNITS THAT THE NOA WILL ALLOW

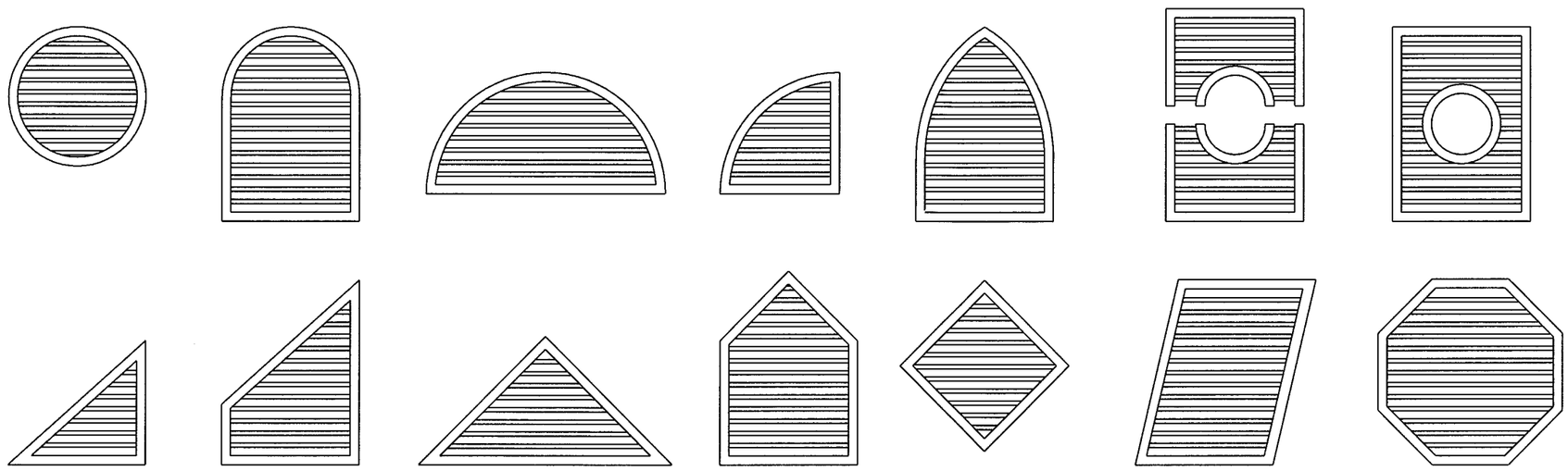

NOTES:

1. OTHER SHAPES MAY APPLY PROVIDING THEY ARE SIMILAR TO THOSE SHOWN AND HAVE CONSTRUCTION AS DESCRIBED IN THIS PACKET.

2. ALL SHAPE LOUVERS ARE TO HAVE THE SAME WIDTH, HEIGHT, AND PRESSURE RESTRICTIONS AS RECTANGULAR LOUVERS, AND MAY BE SPLICED/STACKED VERTICALLY AND HORIZONTALLY (MULLED UNITS) IN THE SAME MANNER AS RECTANGULAR LOUVERS.

3. IF THE SHAPE LOUVER SECTION WIDTH EXCEEDS 72", A BLADE SUPPORT IS REQUIRED.

4. A MULLION REQUIRED FOR SHAPE LOUVERS ONLY IF BOTH OF THE FOLLOWING ARE TRUE: OVERALL UNIT WIDTH IS >72", AND SECTION HEIGHT IS >72".

5. FOLLOW THE SAME GUIDELINES AS NON-SHPAED UNITS FOR FASTENING OF SHAPE UNITS TO THE BUILDING CONDITION.

CHANDER P. NANGIA P.E.
7423 HOLLOW RIDGE DR.
HOUSTON, TX 77095
FLORIDA PE # 21938

DRAWN BY M STEELE
DATE 4/27/09
SCALE 0.5":1'
SHEET NO. 10 OF 16
CAD DRAWING NO. K605MD

AIROLITE
The look that works.™
SCHOFIELD, WISCONSIN 54476
715-359-6171

TITLE K605MD LOUVER
SHAPE STYLES, ELEVATION CONFIGURATIONS

MAY 12 2009

Approved as complying with the Florida Building Code
Date 08/05/2009
NOA# 07-0519.15
Miami Dade Product Control Division
By

4 TYPICAL SHAPE LOUVER CALLOUTS

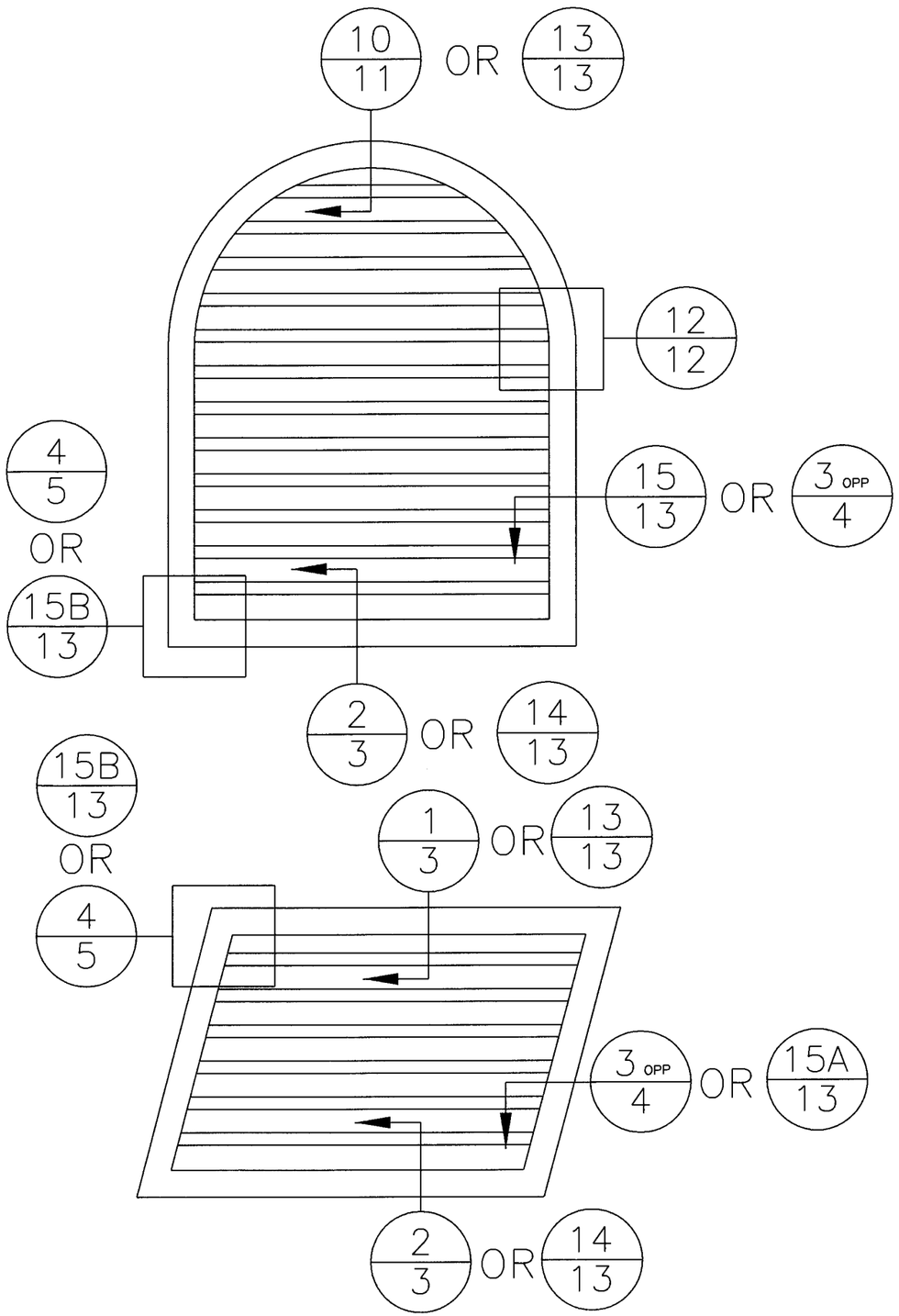

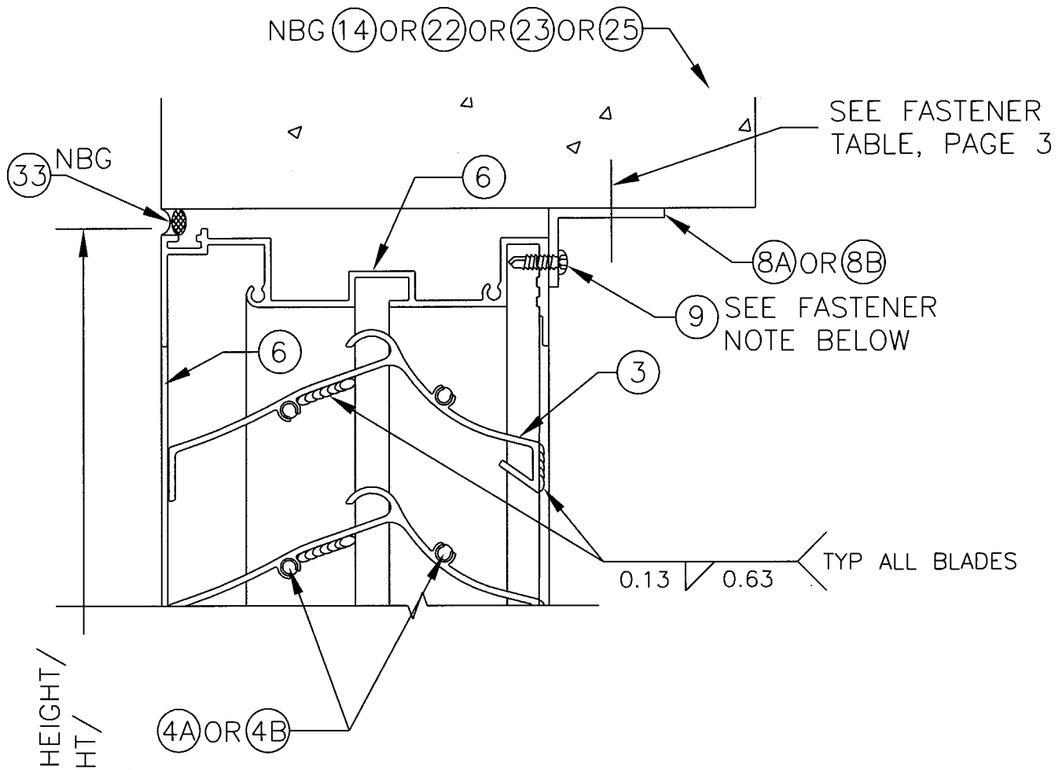

FASTENER NOTES FOR 9:

6" MAX ℄ FOR 1, 4" MAX ℄ FOR 2 & 3

10/11 SHAPES HEAD DETAIL
SCALE: 1:2

CHANDER P. NANGIA, P.E.
7423 HOLLOW RIDGE DR.
HOUSTON, TX 77095
FLORIDA PE # 21938

NBG=NOT BY MANUFACTURER

DRAWN BY M STEELE	DATE 4/27/09
SCALE VARIES	
SHEET NO. 11 OF 16	CAD DRAWING NO. K605MD

AIROLITE
The look that works.™
SCHOFIELD, WISCONSIN 54476
715-359-6171

TITLE: K605MD LOUVER

SHAPE ELEVATIONS, DETAILS – SHAPE

MAY 12 2009

Approved as complying with the Florida Building Code
Date 08/05/2009
NOA# 09-0519.15
Miami Dade Product Control Division
By

12 A / 12 JAMB SPLICE DETAIL
SCALE: 1:2

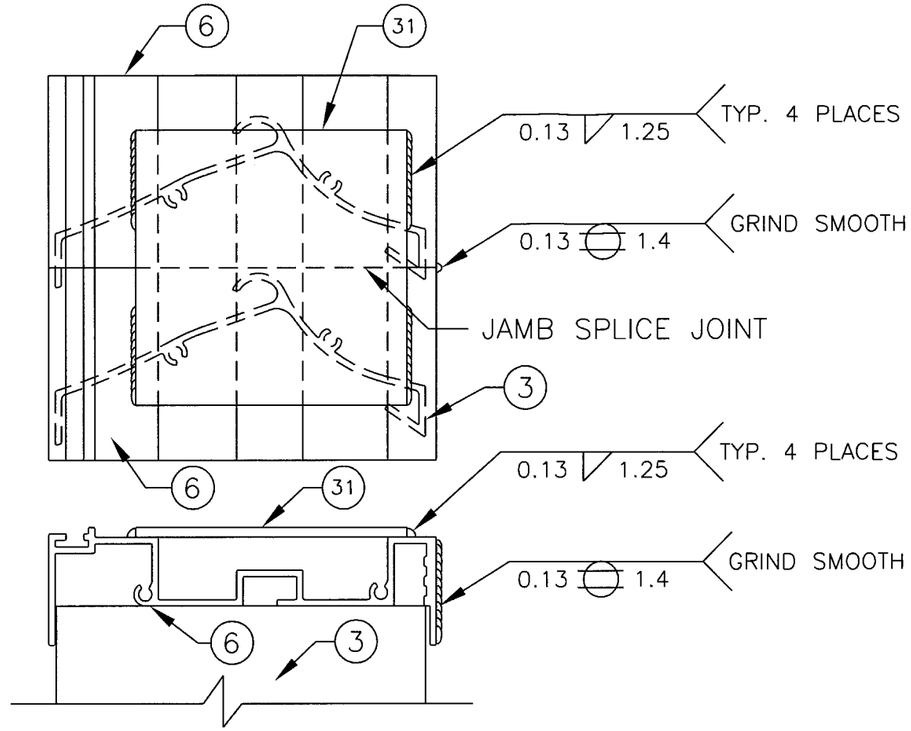

THIS IS ONLY ON SHAPE UNITS WHEN A CURVED EXTRUDED JAMB MEETS A STRAIGHT JAMB (THIS IS NOT FOR A "SPLICED" UNIT WHERE ONE LOUVER SIT ON TOP OF ANOTHER).

12 B / 12 CHANNEL JAMB SPLICE DETAIL
SCALE: 1:2

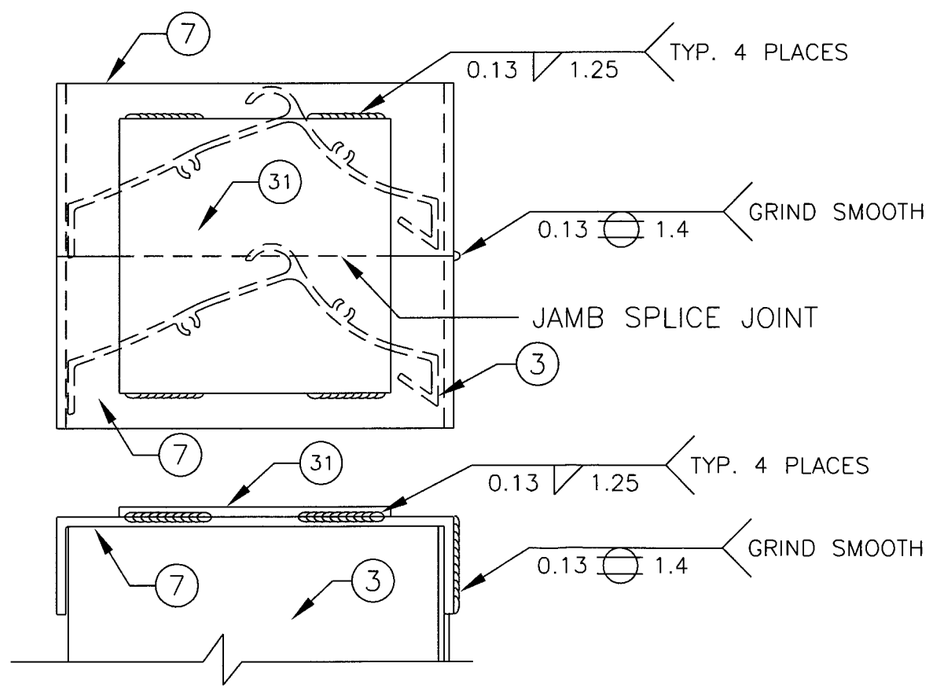

THIS IS ONLY ON SHAPE UNITS WHEN A CURVED C-CHANNEL JAMB MEETS A STRAIGHT JAMB (THIS IS NOT FOR A "SPLICED" UNIT WHERE ONE LOUVER SIT ON TOP OF ANOTHER).

CHANDER P. NANGIA P.E.
7423 HOLLOW RIDGE DR.
HOUSTON, TX 77095
FLORIDA PE # 21938

DATE 4/27/09
DRAWN BY M STEELE
SCALE 1:2
SHEET NO. 12 OF 16
CAD DRAWING NO. K605MD

AIROLITE
The look that works.™
SCHOFIELD, WISCONSIN 54476
715-359-6171

TITLE
K605MD LOUVER
SHAPE LOUVERS, DETAILS - SPLICED JAMBS

MAY 12 2009

Approved as complying with the Florida Building Code
Date 08/05/2009
NOA# 07-0519.15
Miami Dade Product Control Division
By

13 / 13 SHAPES HEAD DETAIL – CHANNEL FRAME
SCALE: 1:2

SETUP FOR OPTIONAL CHANNEL FRAME

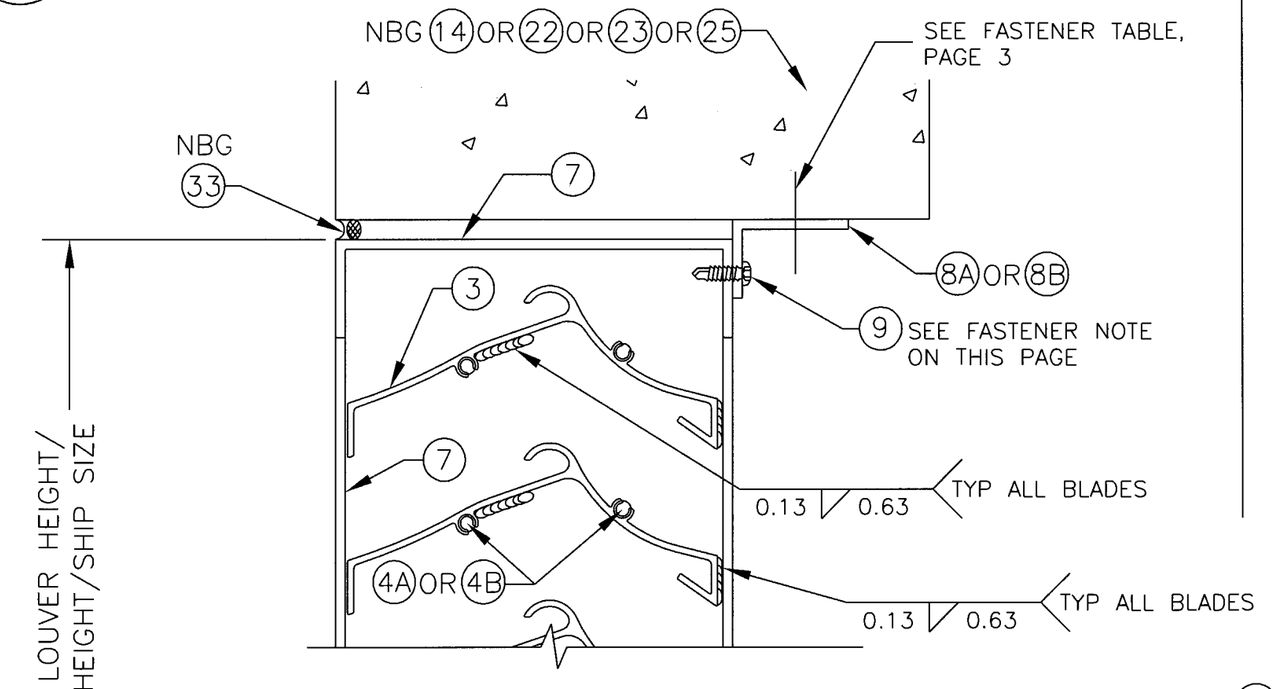

FASTENER NOTES FOR (9):

6" MAX ℄ FOR △1, 4" MAX ℄ FOR △2 & △3

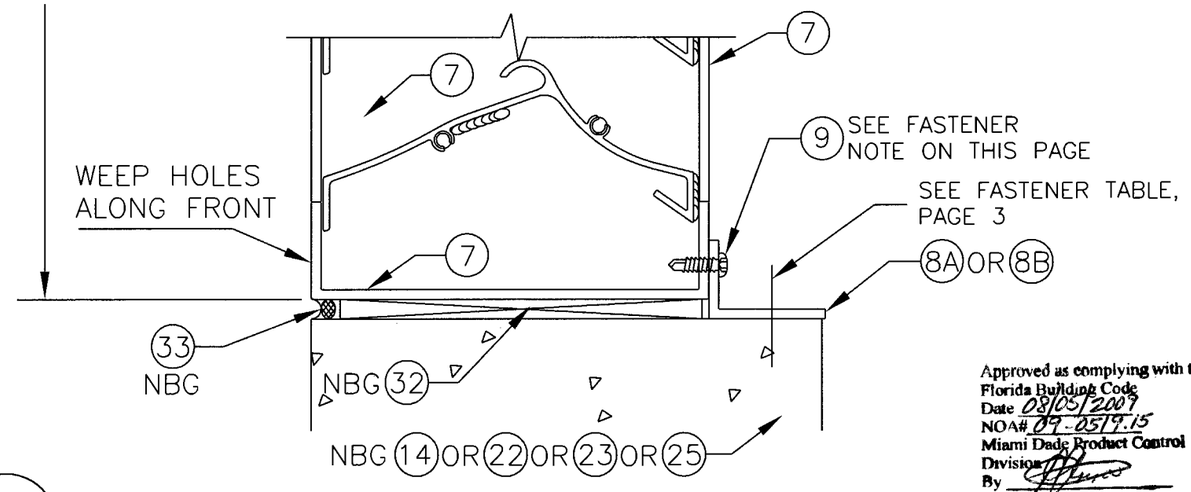

14 / 13 SHAPES SILL DETAIL – CHANNEL JAMB
SCALE: 1:2

Approved as complying with the Florida Building Code
Date 08/05/2009
NOA# 09-0519.15
Miami Dade Product Control Division
By

NBG=NOT BY MANUFACTURER

15 A / 13 SHAPES CHANNEL JAMB DETAIL
SCALE: 1:2

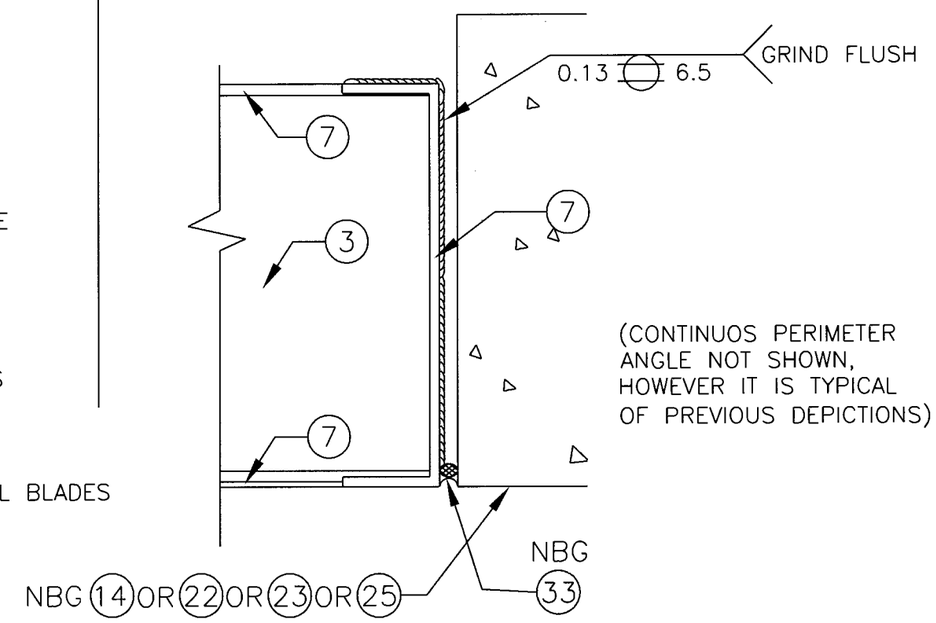

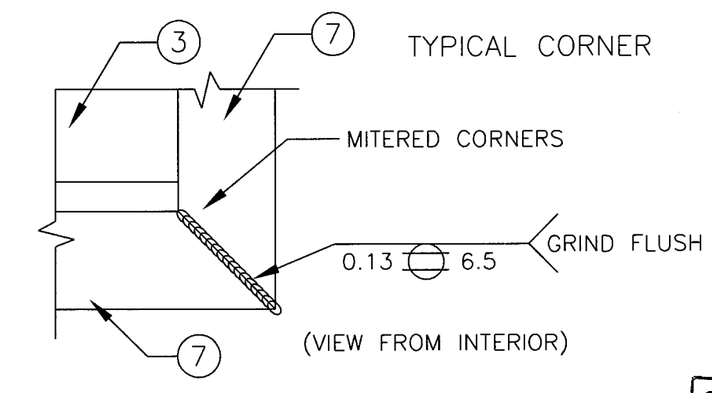

(CONTINUOS PERIMETER ANGLE & WALL CONDITION NOT SHOWN, HOWEVER IT IS TYPICAL OF PREVIOUS DEPICTIONS)

15 B / 13 SHAPES SILL DETAIL – CHANNEL JAMB INTERIOR
SCALE: 1:2

DRAWN BY M STEELE	DATE 4/27/09
SCALE 1:2	
SHEET NO. 13 OF 16	CAD DRAWING NO. K605MD

AIROLITE
The look that works.™
SCHOFIELD, WISCONSIN 54476
715-359-6171

TITLE K605MD LOUVER

SHAPE LOUVERS, DETAILS – CHANNEL FRAME

MAY 12 2009

CHANDER P. NANGIA, P.E.
7423 HOLLOW RIDGE DR.
HOUSTON, TX 77095
FLORIDA PE # 21938

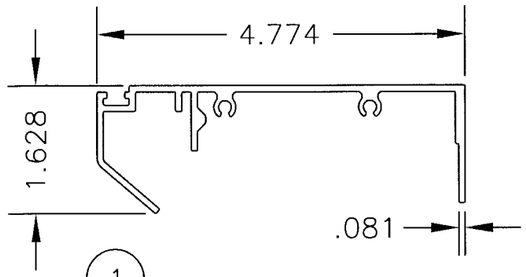

1 LOUVER HEAD
6063-T5 OR 6105-T5 ALUMINUM

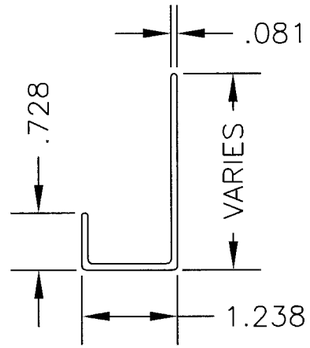

2 LOUVER HEAD DRAIN
3003-H14, 5052-H32, OR 6063-T5 ALUMINUM

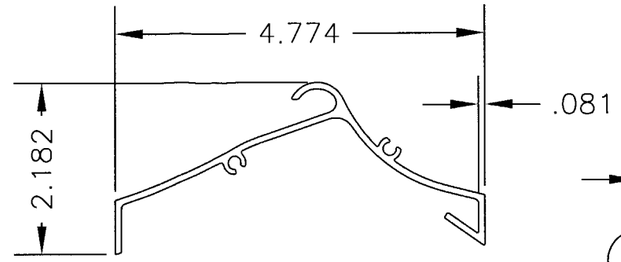

3 LOUVER BLADE
6105-T5 ALUMINUM

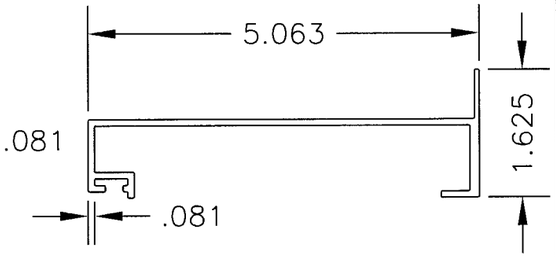

5 LOUVER SILL
6063-T5 OR 6105-T5 ALUMINUM

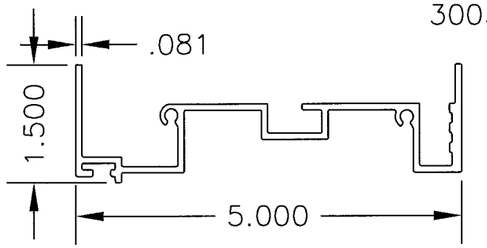

6 LOUVER JAMB
6105-T5 ALUMINUM

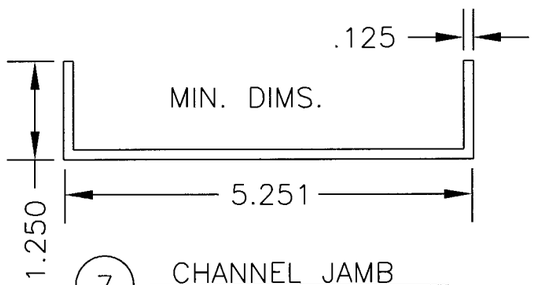

7 CHANNEL JAMB
6063-T5 ALUMINUM

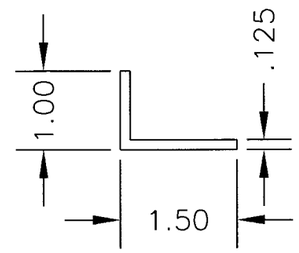

8A CONT. PERIMETER ANGLE
6061-T6 ALUMINUM

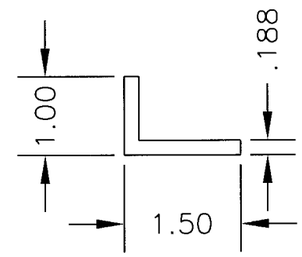

8B CONT. PERIMETER ANGLE
6063-T5 ALUMINUM

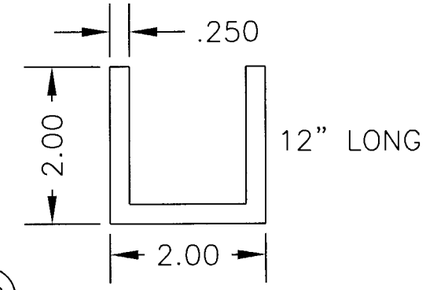

28 SPLICE CHANNEL
6061-T6, 6005-T5, OR
6105-T5 ALUMINUM

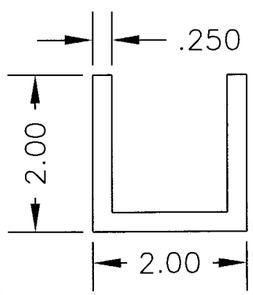

10 BLADE SUPPORT CHANNEL
6061-T6, 6005-T5, OR
6105-T5 ALUMINUM

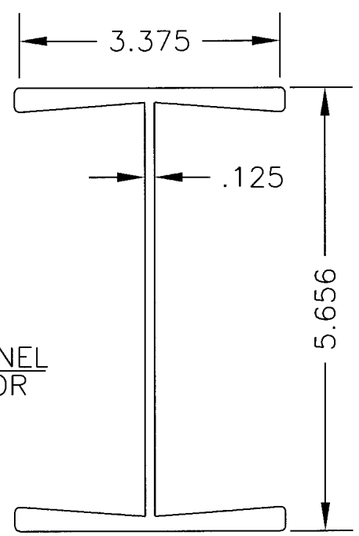

12 "SLIP I-MULLION"
6105-T5 OR 6061-T6 ALUMINUM

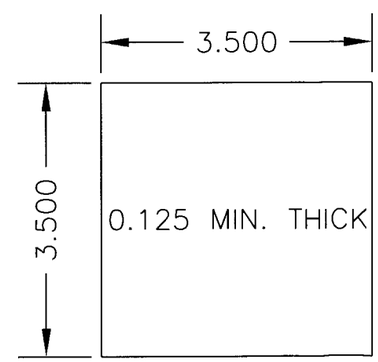

31 SPLICE PLATE
3003-H14 OR 5052-H32 ALUMINUM

Approved as complying with the
Florida Building Code
Date 08/05/2009
NOA# 09-0519.15
Miami Dade Product Control
Division
By

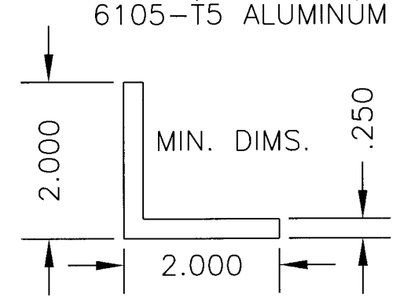

11 OPTIONAL MULLION SUPPORT
6063-T5 (MIN) ALUMINUM

DRAWN BY M STEELE
DATE 4/27/09
SCALE 1:2
SHEET NO. 14 OF 16
CAD DRAWING NO. K605MD

AIROLITE
The look that works.™
SCHOFIELD, WISCONSIN 54476
715-359-6171

TITLE K605MD LOUVER

DETAILS - PART DETAILS

MAY 12 2009

CHANDER P. NANGIA P.E.
7423 HOLLOW RIDGE DR.
HOUSTON, TX 77095
FLORIDA PE # 21938

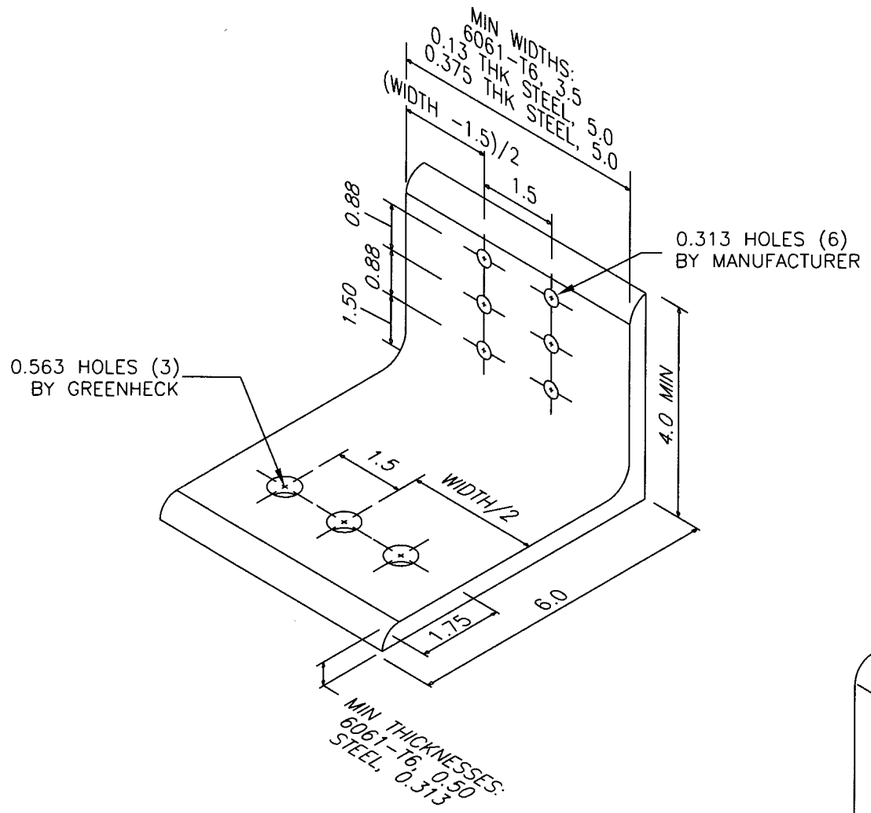

(15) LOUVER MULLION ANGLE CONCRETE/CMU
A36 STEEL OR 6061-T6 ALUM

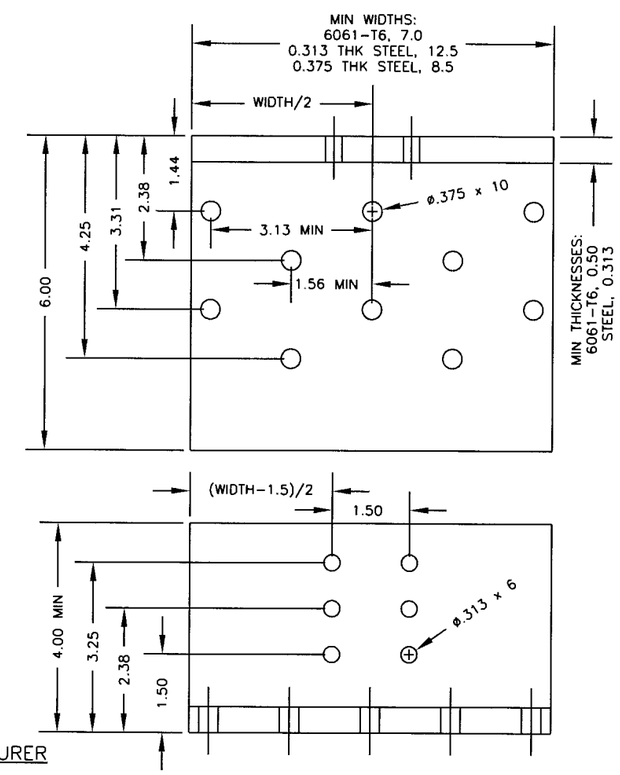

(26) MULLION SUPPORT, WOOD
6061-T6 ALUMINUM,
OR A36 STEEL

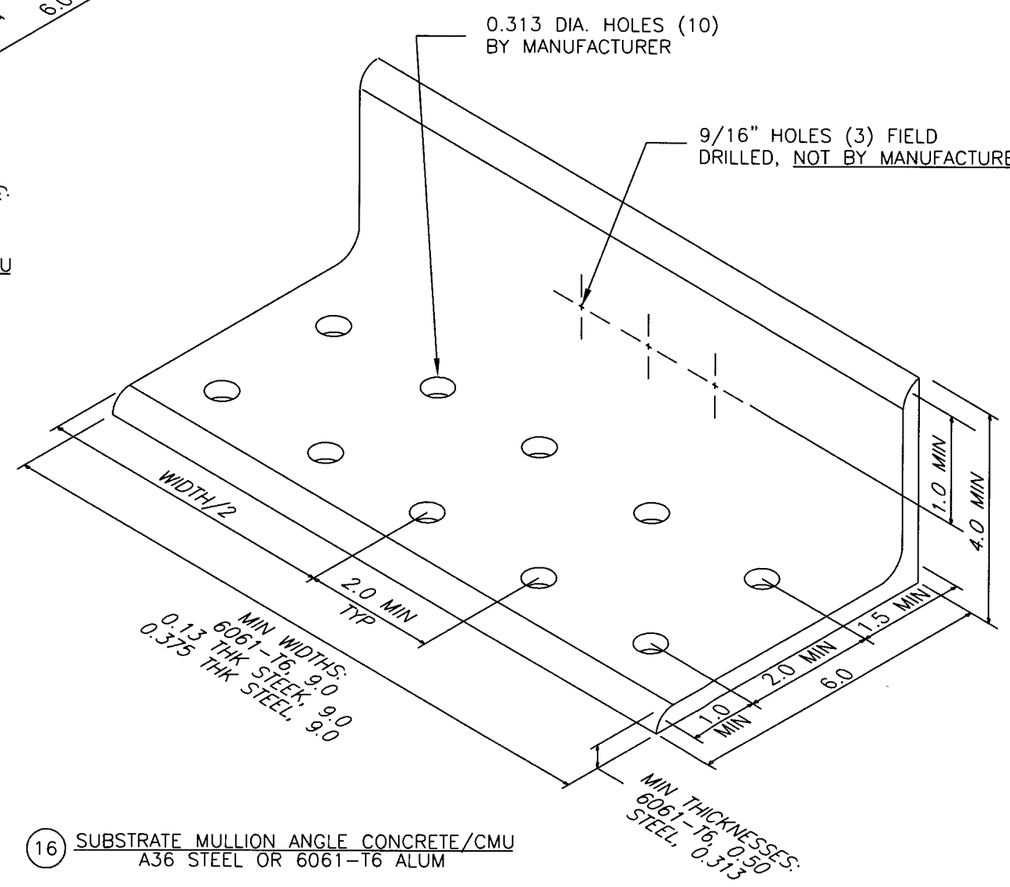

(16) SUBSTRATE MULLION ANGLE CONCRETE/CMU
A36 STEEL OR 6061-T6 ALUM

Approved as complying with the
Florida Building Code
Date 08/05/2009
NOA# 07-0519.15
Miami Dade Product Control
Division
By

CHANDER P. NANGIA PE.
7423 HOLLOW RIDGE DR.
HOUSTON, TX 77095
FLORIDA PE # 21938

AIROLITE
The look that works.™
SCHOFIELD, WISCONSIN 54476
715-359-6171

DRAWN BY M STEELE
DATE 4/27/09
SCALE 1:2
SHEET NO. 15 OF 16
CAD DRAWING NO. K605MD

TITLE K605MD LOUVER
DETAILS - PART DETAILS

MAY 12 2009

ITEM	DESCRIPTION	MATERIAL	NOTES
1	LOUVER HEAD	ALUM	
2	LOUVER HEAD DRAIN	ALUM	
3	LOUVER BLADE	ALUM	
4A	#10 x 0.5 MIN THREAD, SCREW, 7075-T6 ALUM	ALUM	USED ON ANODIZED UNITS
4B	#10 OR #12 x 0.5 MIN THREAD, SCREW, STAINLESS	SS	TYPICALLY USED
5	LOUVER SILL	ALUM	
6	LOUVER JAMB	ALUM	
7	OPTIONAL C-CHANNEL JAMB	ALUM	OPTIONAL FOR SHAPE UNITS
8A	CONTINUOUS MTG ANGLE, 1.0x1.5x0.125 MIN, 6061-T6	ALUM	
8B	CONTINUOUS MTG ANGLE, 1.0x1.5x0.188 MIN, 6063-T5	ALUM	
9	#10-24 OR #12-24 x 0.5 MIN THREAD, SCREW	SS	
10	BLADE SUPPORT CHANNEL, 2x2x2x0.25	ALUM	
11	OPTIONAL ADDITIONAL MULLION SUPPORT ANGLE	ALUM	OPTIONAL
12	SLIP "I" MULLION	ALUM	
13	GASKET, 3.5x4x0.25 MIN (BY MANUFACTURER)	VARIES	RUBBER/NEOPRENE LIKE
14	CONCRETE OR GROUT FILLED CMU, 2000 PSI MIN	VARIES	NOT BY MANUFACTURER
15	LOUVER MULLION ANGLE FOR CONCRETE/CMU	STEEL/ALUM	
16	SUBSTRATE MULLION ANGLE FOR CONCRETE/CMU	STEEL/ALUM	
17	0.25-20x1 MIN, SCREW (BY MANUFACTURER)	SS	
18	BOLT, 0.5-13x1 MIN (BY MANUFACTURER)	SS	
19	NUT, 0.5-13 MIN (BY MANUFACTURER)	SS	
20	WASHER, 0.5 MIN (BY MANUFACTURER)	SS	
21	0.25 DIA. ITW BUILDEX TAPCON w/ ADV. THREADFORM, 1.75 MIN EMBEDMENT	SS/STEEL	NOT BY MANUFACTURER
22	STRUCTURAL STEEL, 0.075 MIN THICKNESS	SS/STEEL	NOT BY MANUFACTURER
23	STEEL STUD, 14GA MIN	SS/STEEL	NOT BY MANUFACTURER
24	0.25 DIAMETER SCREW, MUST FULLY ENGAGE STEEL	SS/STEEL	NOT BY MANUFACTURER
25	WOOD SUBSTRATE, G=0.55 MIN DENSITY	WOOD	NOT BY MANUFACTURER
26	MULLION ANGLE FOR WOOD	STEEL/ALUM	
27	0.375 DIA. LAG SCREW, 3.0 MIN EMBEDMENT	SS/STEEL	NOT BY MANUFACTURER
28	SPLICE CHANNEL, 2x2x2x0.25, 12" LONG	ALUM	
29	BOLT, 0.313x2.5 MIN (BY MANUFACTURER)	SS	
30	NUT, 0.313(5X16) (BY MANUFACTURER)	SS	
31	SPLICE PLATE	ALUM	
32	SHIMS, OPTIONAL, AS REQUIRED, INCOMPRESSABLE	VARIES	NOT BY MANUFACTURER
33	SEALANT AND BACKER ROD	VARIES	NOT BY MANUFACTURER

GENERAL NOTES:

1. IT SHALL BE THE RESPONSIBILITY OF THE PERMIT HOLDER TO VERIFY THE STRUCTURAL INTEGRITY OF THE EXISTING STRUCTURE TO SUPPORT THE LOADS IMPOSED BY THE PENTHOUSE ASSEMBLY.

2. THE K605MD HAS BEEN DESIGNED AND QUALIFIED IN ACCORDANCE WITH THE FLORIDA BUILDING CODE (FBC) AND TEST PROTOCOLS TAS-201 (IMPACT), TAS-202 (UNIFORM STATIC PRESSURE), AND TAS-203 (CYCLIC FATIGUE) TO A MAXIMUM DESIGN LOAD OF +/- 110 PSF.

3. THE MAXIMUM UNSUPPORTED BLADE LENGTH SHALL NOT EXCEED 72" WITHOUT STIFFENER AND 144" WITH STIFFENER.

4. THE MAXIMUM OVERALL UNIT HEIGHT IS UNLIMITED BY MEANS OF STACKING AND USE OF SPLICED BLADE SUPPORTS. THE MAXIMUM OVERALL UNIT WIDTH IS UNLIMITED BY USE OF MULLIONS.

5. LOUVER CONSTRUCTION: HEAD, SILL, JAMBS, AND BLADES ARE SQUARE CUT AT BOTH ENDS. BLADE SPACING IS 2" MAX. EACH JAMB IS SECURED TO THE SILL WITH (2) SCREWS AND WELDED. BLADES AND HEADS ARE SECURED TO JAMBS WITH (2) SCREWS AND WELDED.

6. ALL WOOD SUBSTRATE SHALL BE G = 0.55 DENSITY OR BETTER.

7. ALL STEEL STUD SUBSTRATE SHALL BE MIN. 14 GA. FY = 50 KSI.

8. ALL STRUCTURAL STEEL SUBSTRATE SHALL BE MIN. 0.075" THICK FY = 36 KSI.

9. ALL CONCRETE SUBSTRATE SHALL BE MIN. 2000 PSI.

10. CONCRETE MASONRY SHALL BE ASTM C90, TYPE II, MIN. 2000 PSI GROUT-FILLED.

11. THE LOUVER MANUFACTURER DOES NOT DETERMINE THE STRUCTURAL INTEGRITY OF THE SUBSTRATE STRUCTURE.

12. THE SYSTEM SHALL ONLY BE INSTALLED IN A LOCATION WHERE THE ENCLOSED AREA/ROOM BEHIND THE LOUVER IS DESIGNED TO DRAIN WATER PENETRATING INTO THE AREA/ROOM, AND THE AREA/ROOM WILL HOUSE WATER RESISTANT/PROOF EQUIPMENT, COMPONENTS, AND/OR SUPPLIES.

13. INSTALLER TO PROVIDE SEPARATION OF DISSIMILAR MATERIALS AS REQUIRED.

CHANDER R. NANGIA PE.
7423 HOLLOW RIDGE DR.
HOUSTON, TX 77095
FLORIDA PE # 21938

DRAWN BY M STEELE
DATE 4/27/09
SCALE NA
SHEET NO. 16 OF 16
CAD DRAWING NO. K605MD

AIROLITE
The look that works.™
SCHOFIELD, WISCONSIN 54476
715-359-6171

TITLE
K605MD LOUVER
ITEMIZED PART LISTING & GENERAL NOTES

MAY 12 2009

Approved as complying with the Florida Building Code
Date 08/05/2009
NOA# 09-0519.15
Miami Dade Product Control Division
By