MIAMI-DADE COUNTY
BUILDING CODE COMPLIANCE OFFICE (BCCO)
PRODUCT CONTROL DIVISION

MIAMI–DADE COUNTY, FLORIDA
METRO–DADE FLAGLER BUILDING
140 WEST FLAGLER STREET, SUITE 1107
MIAMI, FLORIDA 33130–1563
(305) 375–2902 FAX (305) 372–6339
www.miamidade.gov/buildingcode

NOTICE OF ACCEPTANCE (NOA)

Vistawall Architectural Products
803 Airport Road
Terrel, TX 75160

SCOPE:

This NOA is being issued under the applicable rules and regulations governing the use of construction materials. The documentation submitted has been reviewed by Miami–Dade County Product Control Division and accepted by the Board of Rules and Appeals (BORA) to be used in Miami–Dade County and other areas where allowed by the Authority Having Jurisdiction (AHJ).

This NOA shall not be valid after the expiration date stated below. The Miami–Dade County Product Control Division (In Miami–Dade County) and/or the AHJ (in areas other than Miami–Dade County) reserve the right to have this product or material tested for quality assurance purposes. If this product or material fails to perform in the accepted manner, the manufacturer will incur the expense of such testing and the AHJ may immediately revoke, modify, or suspend the use of such product or material within their jurisdiction. BORA reserves the right to revoke this acceptance, if it is determined by Miami–Dade County Product Control Division that this product or material fails to meet the requirements of the applicable building code.

This product is approved as described herein, and has been designed to comply with the Florida Building Code, including the High Velocity Hurricane Zone.

DESCRIPTION: Series "FG-5100" Aluminum Window Wall System

APPROVAL DOCUMENT: Drawing No. **FG-5100**, titled "FG-5100 Storefront System", sheets 1 through 11 of 11, dated 04/17/09 with revision 2 dated 08/25/09, prepared by Bromley Cook Engineering, Inc., signed and sealed by William D. Cook, P. E., bearing the Miami–Dade County Product Control Renewal stamp with the Notice of Acceptance number and expiration date by the Miami–Dade County Product Control Division.

MISSILE IMPACT RATING: Large and Small Missile Impact Resistant

LABELING: Each unit shall bear a permanent label with the manufacturer's name or logo, city, state and following statement: "Miami–Dade County Product Control Approved", unless otherwise noted herein.

RENEWAL of this NOA shall be considered after a renewal application has been filed and there has been no change in the applicable building code negatively affecting the performance of this product.

TERMINATION of this NOA will occur after the expiration date or if there has been a revision or change in the materials, use, and/or manufacture of the product or process. Misuse of this NOA as an endorsement of any product, for sales, advertising or any other purposes shall automatically terminate this NOA. Failure to comply with any section of this NOA shall be cause for termination and removal of NOA.

ADVERTISEMENT: The NOA number preceded by the words Miami–Dade County, Florida, and followed by the expiration date may be displayed in advertising literature. If any portion of the NOA is displayed, then it shall be done in its entirety.

INSPECTION: A copy of this entire NOA shall be provided to the user by the manufacturer or its distributors and shall be available for inspection at the job site at the request of the Building Official.

This NOA **renews NOA # 04-0308.02** and consists of this page 1 and evidence page E–1, as well as approval document mentioned above.

The submitted documentation was reviewed by **Jaime Gascon, P. E.**

MIAMI-DADE COUNTY APPROVED

J. Gascon 9/3/09

Vistawall Architectural Products

NOTICE OF ACCEPTANCE: EVIDENCE SUBMITTED

A. DRAWINGS

1. Manufacturer's die drawings and sections.
2. Drawing No **FG-5100**, Sheets 1 through 11 of 11, titled "FG-5100 Storefront System", dated 04/17/09 with revision 2 dated 08/25/09, prepared by Bromley Cook Engineering, Inc., signed and sealed by William D. Cook, P.E.

B. TESTS

1. Test reports on: 1) Air Infiltration Test, per FBC, TAS 202-94
   2) Uniform Static Air Pressure Test, Loading per FBC,TAS 202-94
   3) Water Resistance Test, per FBC, TAS 202-94
   4) Large Missile Impact Test per FBC, TAS 201-94
   5) Cyclic Wind Pressure Loading per FBC, TAS 203-94

   along with marked-up drawings and installation diagram of aluminum window wall system, prepared by Certified Testing Laboratory Architectural Division, Test Report No. **CTLA- 1177W**, dated 01/06/04, signed and sealed by Ramesh Patel, P.E.
   (Submitted under previous NOA# 04-0308.02)

C. CALCULATIONS

1. Anchor verification calculations and structural analysis, complying with FBC–2007, prepared by Bromley Cook Engineering, Inc., dated 04/17/2009, signed and sealed by William D. Cook, P.E.
   Complies with ASTM E1300–04

D. QUALITY ASSURANCE

1. Miami–Dade Building Code Compliance Office (BCCO).

E. MATERIAL CERTIFICATIONS

1. Notice of Acceptance No. **08-1118.07** issued to Oldcastle Glass Inc. for their "**StormGlass Glass Interlayer**", dated 03/05/09, expiring on 12/11/13.

F. STATEMENTS

1. Statement letter of conformance, dated May 4, 2009, signed and sealed by William D. Cook, P.E.

G. OTHERS

1. Notice of Acceptance No. **04-0308.02**, issued to Vistawall Architectural Products for their Series "FG-5100 Aluminum Window Wall System", approved on 08/19/04 and expiring on 08/19/09.

Jaime Gascon, P.E.
Chief, Product Control Division
NOA No. 09-0520.10
Expiration Date: August 19, 2014
Approval Date: August 19, 2009

FG-5100 STOREFRONT FRAMING SYSTEM

LARGE MISSILE IMPACT RESISTANT

INDEX TO DRAWINGS

SHEET 1: INDEX TO DRAWINGS AND NOTES
SHEET 2: TYPICAL ELEVATION
SHEET 3: TYPICAL GLAZING DETAILS
SHEET 4: TYPICAL GLAZING DETAILS
SHEET 5: TYPICAL GLAZING DETAILS
SHEET 6: TYPICAL GLAZING DETAILS
SHEET 7: MULLION LOAD CAPACITY CHART
SHEET 8: JAMB LOAD CAPACITY CHART
SHEET 9: ANCHOR CAPACITY CHART / ANCHOR SCHEDULE
SHEET 10: BILL OF MATERIALS
SHEET 11: EXTRUSION PROFILES

GENERAL NOTES

1) THIS WINDOW SYSTEM HAS BEEN TESTED, ENGINEERED AND APPROVED FOR DESIGN PRESSURES NOT TO EXCEED THOSE SHOWN IN LOAD CHARTS. SYSTEM CONFORMS TO THE 2007 FBC, HVHZ REGION.

2) ANCHORS SHALL BE AS LISTED, SPACED AS SHOWN ON DETAILS, ANCHOR EMBEDMENT TO BASE MATERIAL SHALL BE BEYOND WALL DRESSING OR STUCCO.

3) BUCK, OPENINGS & BUCK FASTENERS MUST BE DESIGNED & INSTALLED TO WITHSTAND WIND LOADS FOR EACH APPLICATION.

4) BUCK FASTENERS MAY NOT EXCEED 16" O.C. SPACING AROUND OPENINGS.

5) THE SYSTEM SHOWN HEREIN WAS TESTED IN CONFORMANCE WITH DADE COUNTY PROTOCOL TAS-201, 202, 203.

6) A 33% INCREASE IN ALLOWABLE STRESS NOT USED IN ANALYSIS.

7) ALL STEEL IN CONTACT WITH ALUMINUM TO BE PAINTED OR PLATED PER FBC 2003.2.4

BROMLEY COOK ENGINEERING, INC.
STRUCTURAL ENGINEERING SERVICES
5440 NW 33rd Avenue - Suite 100
FORT LAUDERDALE, FLORIDA 33309
TEL: (954) 772-4624 FAX: (954) 772-4634

AUG 26 2009

WILLIAM D. COOK, P.E., SECB
FLA P.E. # 43904 - FLA S.I. # 2008

FOR MIAMI-DADE CO. B.C.C.O.

PRODUCT RENEWED
as complying with the Florida Building Code
Acceptance No 09-0520.10
Expiration Date AUG. 19, 2014
By
Miami-Dade Product Control Division

REV	BY	DATE	DESCRIPTION
2	WDC	8/25/09	PER CITY COMMENTS
1	DGI	4/17/09	ENTIRE RE-DRAW

MANUAL COMP

VISTAWALL
ARCHITECTURAL PRODUCTS
803 AIRPORT RD. TERRELL, TX 75160
(972) 551-6100
THE VISTAWALL GROUP
BUTLER MANUFACTURING COMPANY

PROJECT
PRODUCT APPROVAL DRAWINGS
FG-5100 STOREFRONT SYSTEM

PROJECT NO.

DRAWN DGI | DATE 4/17/09

SCALE NOTED

DRAWING NO. FG-5100

SHEET 1 OF 11

VISTAWALL SERIES FG-5100 STOREFRONT SYSTEM

NOTE 1: HORIZONTAL MULLION DETAIL 2/3 OR 5/3 IS OPTIONAL AT ANY LOCATION IN ANY BAY.

NOTE 2: FG-5183 TRANSITION GLAZING ADAPTER IS OPTIONAL ANY BAY.

NOTE 3: D.L.O. = DAYLITE OPENING

NOTE 4: GLASS SIZE = D.L.O. + 1 1/8"

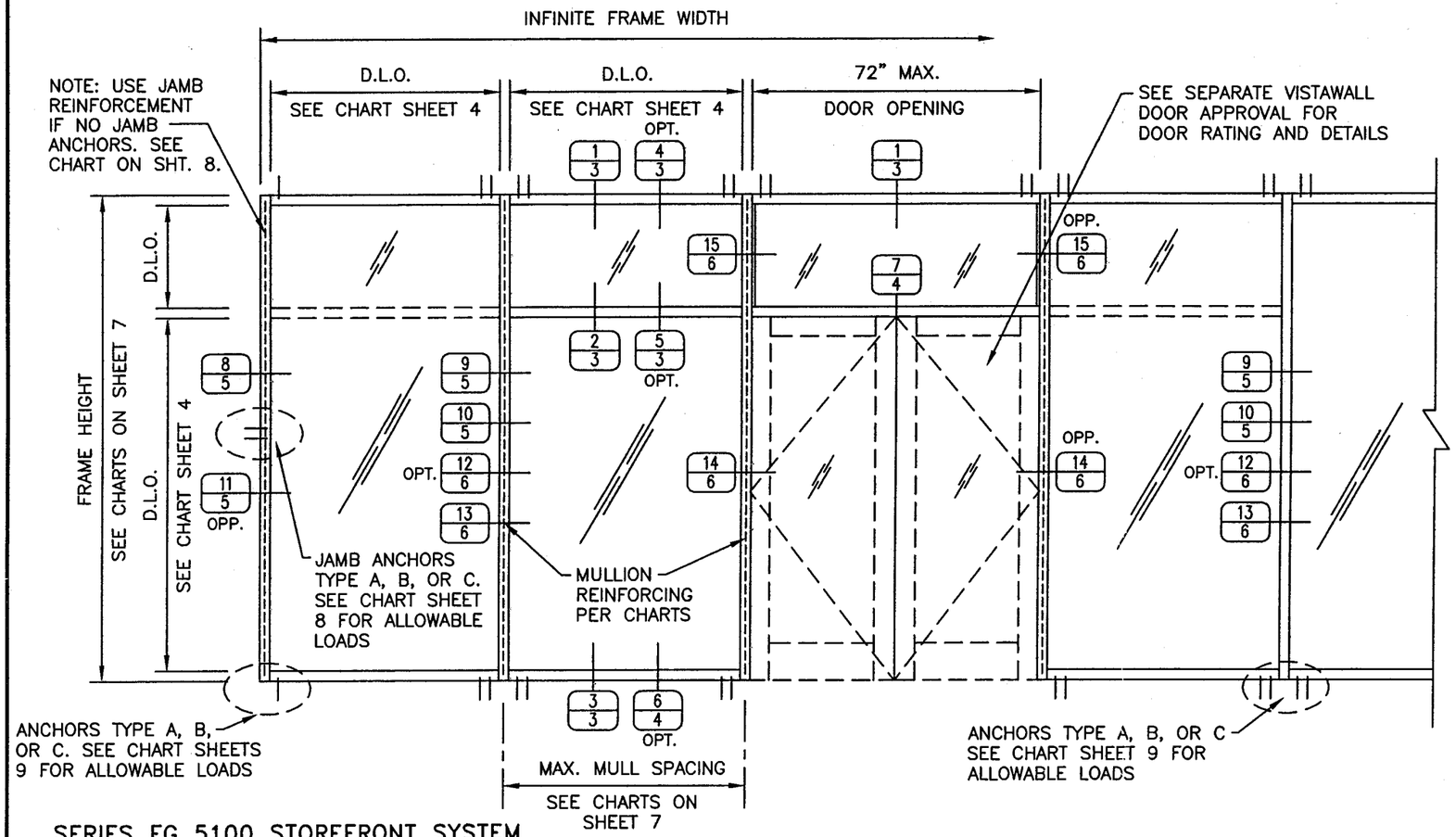

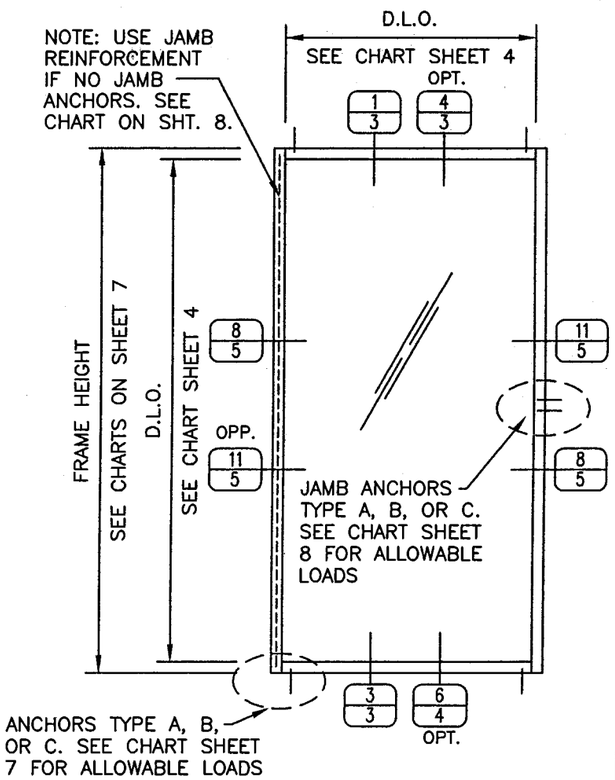

SERIES FG 5100 STOREFRONT SYSTEM

THIS SYSTEM IS RATED FOR LARGE MISSILE IMPACT RESISTANCE. SHUTTERS ARE NOT REQUIRED.

CODE REQUIREMENTS FOR SAFEGUARDS MUST BE OBSERVED.

THIS PRODUCT HAS BEEN DESIGNED AND TESTED TO COMPLY WITH THE REQUIREMENTS OF THE FLORIDA BUILDING CODE 2007 EDITION INCLUDING HIGH VELOCITY HURRICANE ZONE.

WOOD BUCKS, BY OTHERS, MUST BE ANCHORED PROPERLY TO TRANSFER LOADS TO THE STRUCTURE.

ANCHORS SHALL BE AS LISTED AND SHOWN ON THE DETAILS. ANCHOR EMBEDMENT TO BASE MATERIAL SHALL BE BEYOND WALL DRESSING OR STUCCO.

ANCHORING OR LOADING CONDITIONS NOT SHOWN IN THESE DETAILS ARE NOT PART OF THIS APPROVAL.

A 33% INCREASE IN ALLOWABLE STRESS IS NOT USED IN THE DESIGN OF THIS SYSTEM.

ALL STEEL IN CONTACT WITH ALUMINUM TO BE PAINTED OR PLATED.

INSTRUCTIONS:

USE CHARTS AS FOLLOWS.

STEP 1: DETERMINE DESIGN WIND LOAD REQUIREMENTS BASED ON WIND VELOCITY, BLDG. HEIGHT, WIND ZONE USING APPLICABLE ASCE 7 STANDARD.

STEP 2: SEE CHART ON SHEET 4 FOR DESIGN LOAD CAPACITY OF DESIRED GLASS SIZE BASED ON APPLICABLE WIND DURATION.

STEP 3: CHECK MULLION AND JAMB CAPACITY FOR GIVEN SPACING AND HEIGHT USING CHARTS ON SHEETS 7 & 8.
THE CAPACITY SHOULD EXCEED THE DESIGN LOAD.

STEP 4: USING CHART ON SHEET 9 SELECT ANCHOR OPTION WITH DESIGN RATING MORE THAN DESIGN LOAD SPECIFIED IN STEP 1 ABOVE.

STEP 5: THE LOWEST VALUE RESULTING FROM STEPS 2, 3 AND 4 SHALL APPLY TO ENTIRE SYSTEM.

NOTE:

SEE CHART ON SHEET 4 FOR GLAZING OPTIONS AND LIMITATIONS

BROMLEY COOK ENGINEERING, INC.
STRUCTURAL ENGINEERING SERVICES
5440 NW 33rd Avenue – Suite 100
FORT LAUDERDALE, FLORIDA 33309
TEL: (954) 772-4624 FAX: (954) 772-4634

AUG 26 2009

WILLIAM D. COOK, P.E., SECB
FLA P.E. # 43904 – FLA S.I. # 2008

FOR MIAMI-DADE CO. B.C.C.O.

PRODUCT RENEWED
as complying with the Florida Building Code
Acceptance No 09-0520.10
Expiration Date AUGUST 19, 2014
By
Miami Dade Product Control Division

REV	BY	DATE	DESCRIPTION
2	WDC	8/25/09	PER CITY COMMENTS
1	DGI	4/17/09	ENTIRE RE-DRAW

MANUAL COMP

VISTAWALL ARCHITECTURAL PRODUCTS
803 AIRPORT RD. TERRELL, TX 75160
(972) 551-6100
THE VISTAWALL GROUP
BUTLER MANUFACTURING COMPANY

PROJECT: PRODUCT APPROVAL DRAWINGS FG-5100 STOREFRONT SYSTEM

PROJECT NO.

DRAWN: DGI | DATE: 4/17/09

SCALE: NOTED

DRAWING NO. FG-5100

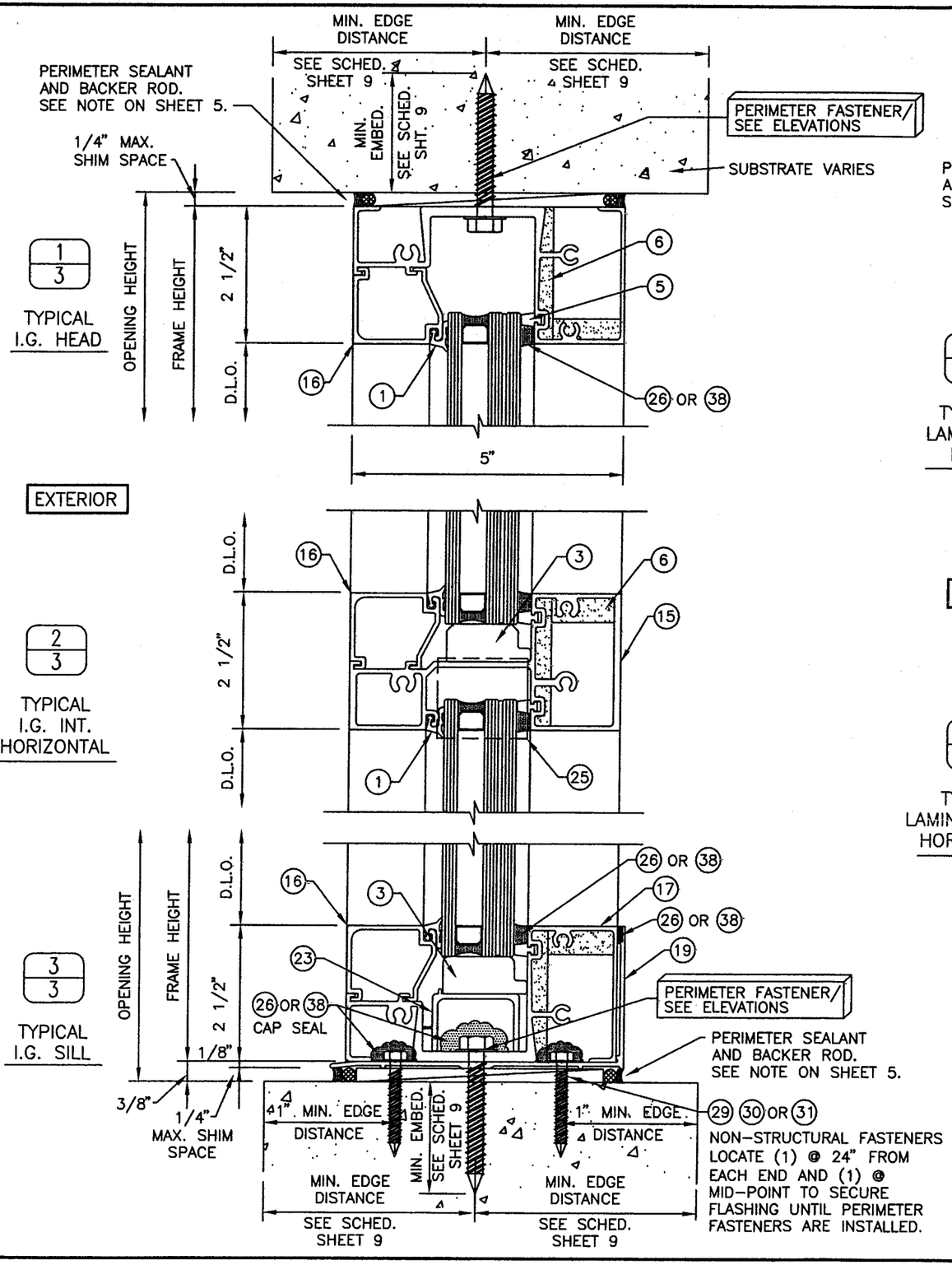

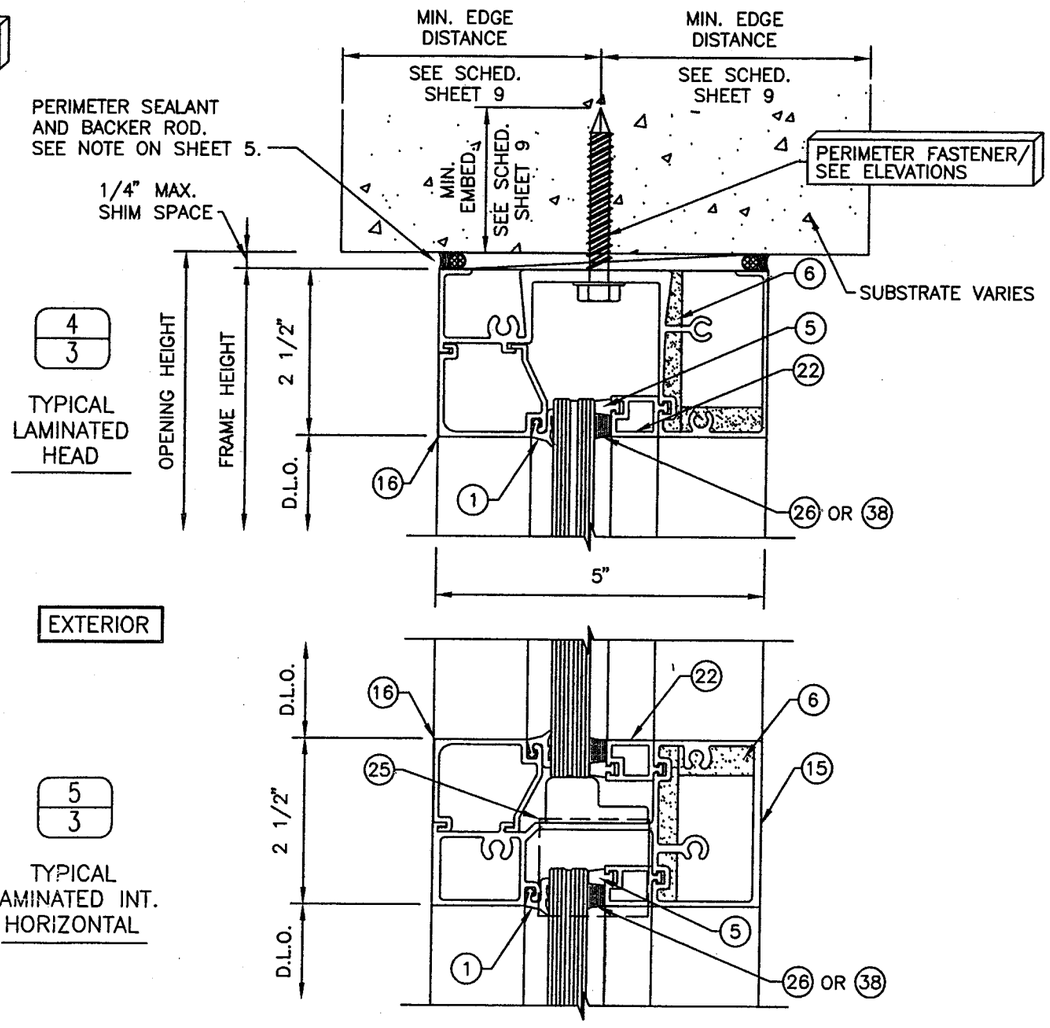

REV	BY	DATE	DESCRIPTION
2	WDC	8/25/09	PER CITY COMMENTS
1	DGI	4/17/09	ENTIRE RE-DRAW

MANUAL COMP

VISTAWALL ARCHITECTURAL PRODUCTS
803 AIRPORT RD. TERRELL, TX 75160
(972) 551-6100
THE VISTAWALL GROUP
BUTLER MANUFACTURING COMPANY

PROJECT
PRODUCT APPROVAL DRAWINGS
FG-5100 STOREFRONT SYSTEM

PROJECT NO.

DRAWN	DATE
DGI	4/17/09

SCALE: NOTED

DRAWING NO. FG-5100

SHEET 3 OF 11

BROMLEY COOK ENGINEERING, INC.
STRUCTURAL ENGINEERING SERVICES
5440 NW 33rd Avenue – Suite 100
FORT LAUDERDALE, FLORIDA 33309
TEL: (954) 772-4624 FAX: (954) 772-4634

AUG 26 2009

WILLIAM D. COOK, P.E., SECB
FLA P.E. # 43904 – FLA S.I. # 2008

FOR MIAMI-DADE CO. B.C.C.O.

PRODUCT RENEWED
as complying with the Florida Building Code
Acceptance No 09-0520.10
Expiration Date AUG. 19, 2014
By
Miami Dade Product Control Division

EXTERIOR

6/4

TYPICAL LAMINATED SILL

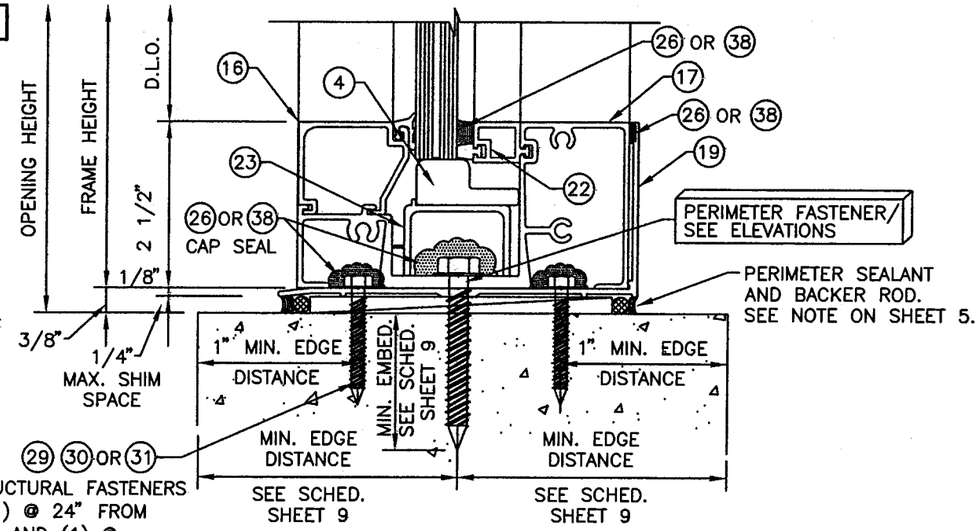

NON-STRUCTURAL FASTENERS LOCATE (1) @ 24" FROM EACH END AND (1) @ MID-POINT TO SECURE FLASHING UNTIL PERIMETER FASTENERS ARE INSTALLED.

EXTERIOR

7/4

TYPICAL TRANSOM HEADER

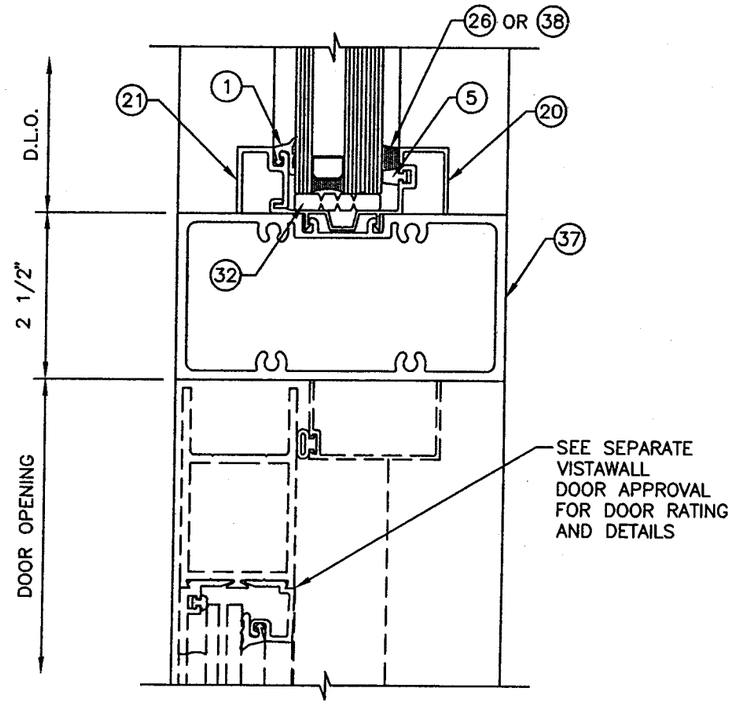

GLAZING OPTIONS AND LIMITATIONS

GLASS MARK SYMBOL	GLASS TYPE	MANUFACTURER	MAXIMUM D.L.O. SIZE	MAXIMUM SQUARE FEET	MAXIMUM LOAD (psf)
A	9/16" STORMGLASS: 1/4" H.S. GLASS OUTBOARD .075" STORMGLASS INTERLAYER 1/4" H.S. GLASS INBOARD	OLDCASTLE	57 1/2" X 96"	38.3	+70.0 -80.0
B	1 1/4" STORMGLASS INSULATED: 1/4" TEMPERED GLASS OUTBOARD 1/2" AIR SPACE 1/4" H.S. GLASS .075" STORMGLASS INTERLAYER 1/4" H.S. GLASS INBOARD	OLDCASTLE	57 1/2" X 96"	38.3	+70.0 -80.0

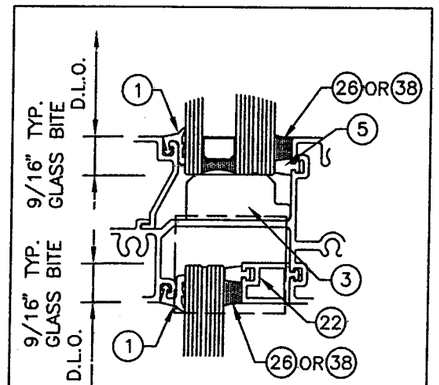

TYPICAL GLAZING DETAIL

BROMLEY COOK ENGINEERING, INC.
STRUCTURAL ENGINEERING SERVICES
5440 NW 33rd Avenue – Suite 100
FORT LAUDERDALE, FLORIDA 33309
TEL: (954) 772-4624 FAX: (954) 772-4634

AUG 26 2009

WILLIAM D. COOK, P.E., SECB
FLA P.E. # 43904 – FLA S.I. # 2008

FOR MIAMI-DADE CO. B.C.C.O.

PRODUCT RENEWED
as complying with the Florida Building Code
Acceptance No 09-0520.10
Expiration Date AUG. 19, 2014
By
Miami Dade Product Control Division

REV	BY	DATE	DESCRIPTION
2	WDC	8/25/09	PER CITY COMMENTS
1	DGI	4/17/09	ENTIRE RE-DRAW

MANUAL COMP

VISTAWALL ARCHITECTURAL PRODUCTS
803 AIRPORT RD. TERRELL, TX 75160
(972) 551-6100
THE VISTAWALL GROUP
BUTLER MANUFACTURING COMPANY

PROJECT
PRODUCT APPROVAL DRAWINGS
FG-5100 STOREFRONT SYSTEM

PROJECT NO.

DRAWN DGI | DATE 4/17/09

SCALE NOTED

DRAWING NO. FG-5100

SHEET 4 OF 11

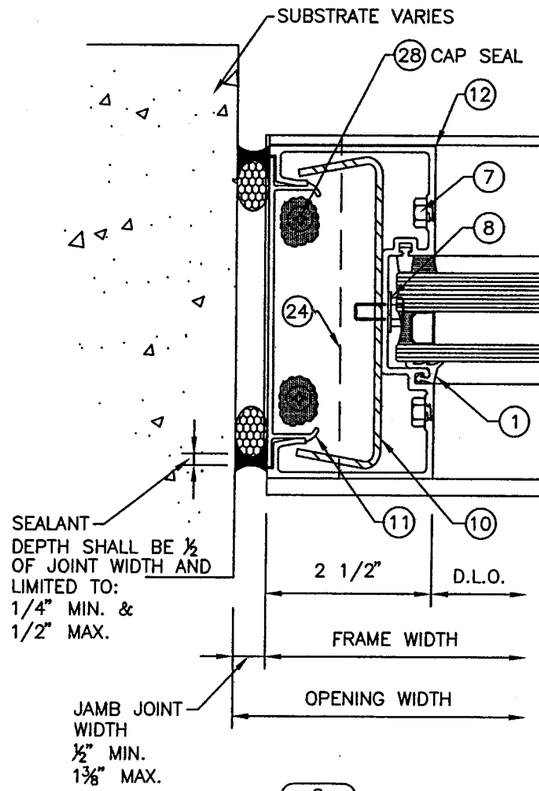

8/5

STANDARD NO ANCHOR I.G. JAMB

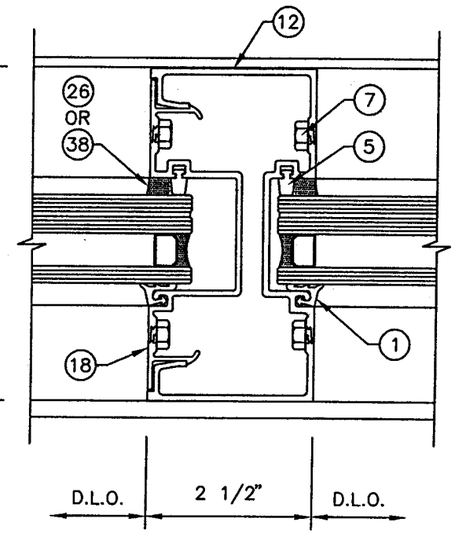

9/5

STANDARD I.G. MULLION

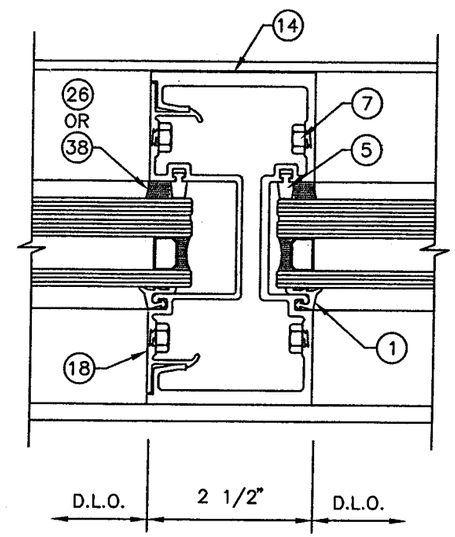

10/5

HEAVY I.G. MULLION

EXTERIOR

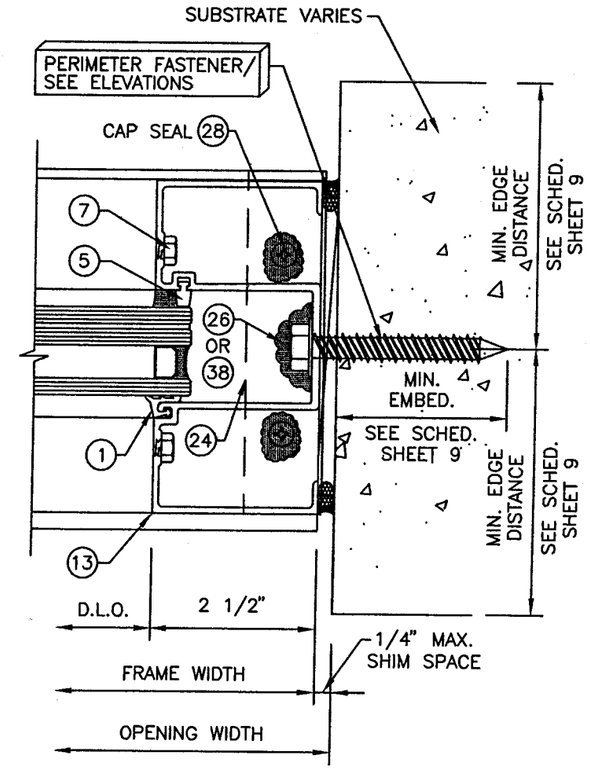

11/5

STANDARD ANCHORED I.G. JAMB

SEALANT NOTES:

PERIMETER SEALANT OPTIONS:
DOW 795 (SILICONE)
TREMCO SPECTREM 2 & 3 (SILICONE)
TREMCO DYMONIC FC (URETHANE)
SONNEBORN SONOLASTIC 150 (ELASTOMERIC)

ALTERNATE SEALANTS & JAMB GAPS:
TO BE APPROVED BY DESIGN PROFESSIONAL OF RECORD AND SEALANT MANUFACTURER.

SEE MULLION SPAN CHARTS ON SHEET 7

BROMLEY COOK ENGINEERING, INC.
STRUCTURAL ENGINEERING SERVICES
5440 NW 33rd Avenue - Suite 100
FORT LAUDERDALE, FLORIDA 33309
TEL: (954) 772-4624 FAX: (954) 772-4634

AUG 2 6 2009

WILLIAM D. COOK, P.E., SECB
FLA P.E. # 43904 - FLA S.I. # 2008

FOR MIAMI-DADE CO. B.C.C.O.

PRODUCT RENEWED
as complying with the Florida Building Code
Acceptance No 09-0520.10
Expiration Date AUG. 19, 2014
By
Miami-Dade Product Control Division

REV	BY	DATE	DESCRIPTION
2	WDC	8/25/09	PER CITY COMMENTS
1	DGI	4/17/09	ENTIRE RE-DRAW

MANUAL COMP

VISTAWALL ARCHITECTURAL PRODUCTS
803 AIRPORT RD. TERRELL, TX 75160
(972) 551-6100
THE VISTAWALL GROUP
BUTLER MANUFACTURING COMPANY

PROJECT: PRODUCT APPROVAL DRAWINGS FG-5100 STOREFRONT SYSTEM

PROJECT NO.

DRAWN DGI | DATE 4/17/09

SCALE NOTED

DRAWING NO. FG-5100

SHEET 5 OF 11

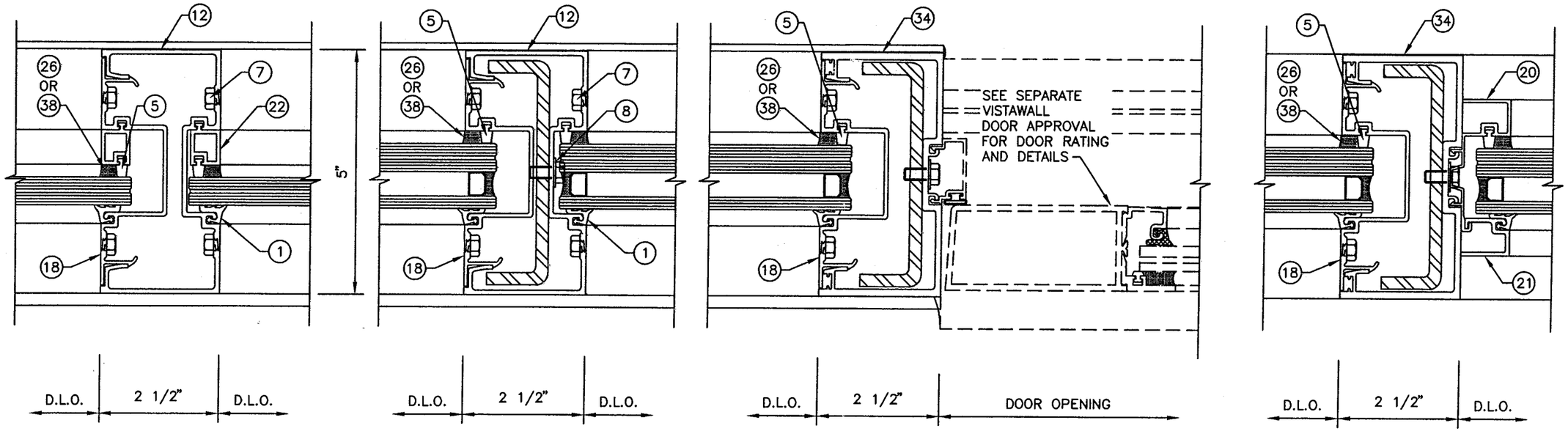

EXTERIOR

12 / 6	13 / 6	14 / 6	15 / 6
STANDARD LAMINATED MULLION	STANDARD REINFORCED I.G. MULLION	TYPICAL DOOR JAMB	TYPICAL TRANSOM

SEE MULLION SPAN CHARTS ON SHEET 7

BROMLEY COOK ENGINEERING, INC.
STRUCTURAL ENGINEERING SERVICES
5440 NW 33rd Avenue – Suite 100
FORT LAUDERDALE, FLORIDA 33309
TEL: (954) 772-4624 FAX: (954) 772-4634

AUG 2 6 2009

WILLIAM D. COOK, P.E., SECB
FLA P.E. # 43904 – FLA S.I. # 2008

FOR MIAMI-DADE CO. B.C.C.O.

PRODUCT RENEWED
as complying with the Florida
Building Code
Acceptance No 09-0520.10
Expiration Date AUG. 19, 2014
By
Miami Dade Product Control
Division

REV	BY	DATE	DESCRIPTION
2	WDC	8/25/09	PER CITY COMMENTS
1	DGI	4/17/09	ENTIRE RE-DRAW

MANUAL COMP

VISTAWALL
ARCHITECTURAL PRODUCTS
803 AIRPORT RD. TERRELL, TX 75160
(972) 551-6100
THE VISTAWALL GROUP
BUTLER MANUFACTURING COMPANY

PROJECT
PRODUCT APPROVAL DRAWINGS
FG-5100 STOREFRONT SYSTEM

PROJECT NO.

DRAWN DGI | DATE 4/17/09

SCALE NOTED

DRAWING NO. FG-5100

SHEET 6 OF 11

MULLION LOAD CAPACITY – PSF
FG–5173/FG–5179 MULL
9955 REINFORCING

NOMINAL DIMS.		MAX. Pd
WIDTH (W)	FRAME HEIGHT	EXT. (+) INT. (–)
36"	77"	+70.0/–80.0
42"		+70.0/–80.0
48"		+70.0/–80.0
54"		+70.0/–80.0
60"		+70.0/–80.0
36"	89"	+70.0/–80.0
42"		+70.0/–80.0
48"		+70.0/–80.0
54"		+70.0/–80.0
60"		+70.0/–80.0
36"	101"	+70.0/–80.0
42"		+70.0/–80.0
48"		+70.0/–80.0
54"		+70.0/–80.0
60"		+60.0/–65.0
36"	120"	+70.0/–80.0
42"		+70.0/–80.0
48"		+70.0/–80.0
54"		+70.0/–80.0
60"		+70.0/–80.0

MULLION LOAD CAPACITY – PSF
FG–5173/FG–5179 MULL

NOMINAL DIMS.		MAX. Pd
WIDTH (W)	FRAME HEIGHT	EXT. (+) INT. (–)
36"	77"	+60.0/–65.0
42"		+60.0/–65.0
48"		+60.0/–65.0
54"		+60.0/–65.0
60"		+60.0/–65.0
36"	89"	+60.0/–65.0
42"		+60.0/–65.0
48"		+60.0/–65.0
54"		+60.0/–65.0
60"		+60.0/–65.0
36"	101"	–
42"		–
48"		–
54"		–
60"		–
36"	120"	–
42"		–
48"		–
54"		–
60"		–

MULLION LOAD CAPACITY – PSF
FG–5175/FG–5179 MULL

NOMINAL DIMS.		MAX. Pd
WIDTH (W)	FRAME HEIGHT	EXT. (+) INT. (–)
36"	77"	+70.0/–80.0
42"		+70.0/–80.0
48"		+70.0/–80.0
54"		+70.0/–80.0
60"		+70.0/–80.0
36"	89"	+70.0/–80.0
42"		+70.0/–80.0
48"		+70.0/–80.0
54"		+70.0/–80.0
60"		+70.0/–80.0
36"	101"	+70.0/–80.0
42"		+70.0/–80.0
48"		+70.0/–80.0
54"		+70.0/–80.0
60"		+70.0/–80.0
36"	120"	+60.0/–65.0
42"		+60.0/–65.0
48"		+60.0/–65.0
54"		–
60"		–

TYPICAL ELEVATION

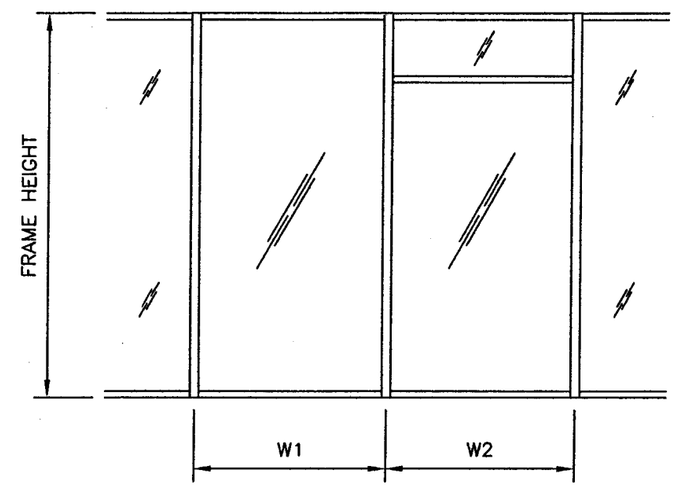

$$\text{WIDTH (W)} = \frac{W1 + W2}{2}$$

STANDARD MULLION REINFORCED

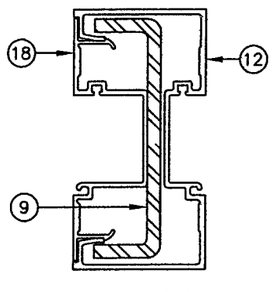

FG–5173/FG–5179 MULL
9955 REINFORCING

STANDARD MULLION UN–REINFORCED

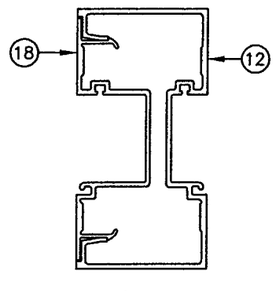

FG–5173/FG–5179 MULL

HEAVY MULLION UN–REINFORCED

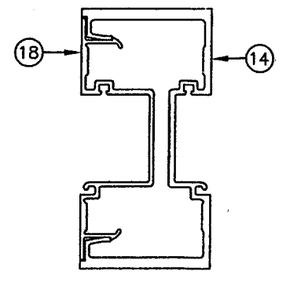

FG–5175/FG–5179 MULL

BROMLEY COOK ENGINEERING, INC.
STRUCTURAL ENGINEERING SERVICES
5440 NW 33rd Avenue – Suite 100
FORT LAUDERDALE, FLORIDA 33309
TEL: (954) 772–4624 FAX: (954) 772–4634

AUG 26 2009

WILLIAM D. COOK, P.E., SECB
FLA P.E. # 43904 – FLA S.I. # 2008

FOR MIAMI–DADE CO. B.C.C.O.

PRODUCT RENEWED
as complying with the Florida Building Code
Acceptance No 09-0520.10
Expiration Date AUG. 19, 2014
By
Miami/Dade Product Control Division

REV	BY	DATE	DESCRIPTION
2	WDC	8/25/09	PER CITY COMMENTS
1	DGI	4/17/09	ENTIRE RE–DRAW

MANUAL COMP

VISTAWALL
ARCHITECTURAL PRODUCTS
803 AIRPORT RD. TERRELL, TX 75160
(972) 551-6100
THE VISTAWALL GROUP
BUTLER MANUFACTURING COMPANY

PROJECT
PRODUCT APPROVAL DRAWINGS
FG-5100 STOREFRONT SYSTEM

PROJECT NO.

DRAWN	DATE
DGI	4/17/09

SCALE
NOTED

DRAWING NO.
FG–5100

SHEET 7 OF 11

TYPICAL ELEVATION

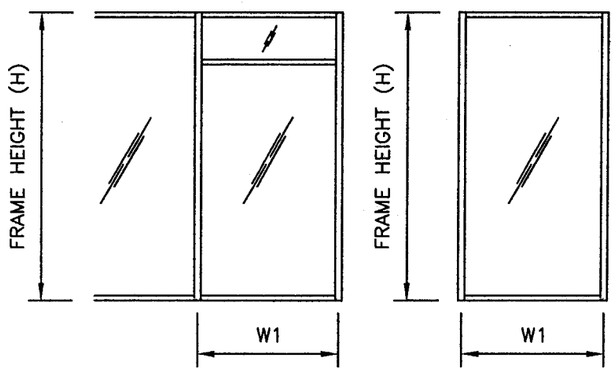

WIDTH (W) = W1 (JAMB) WIDTH (W) = W1 (JAMB)

ANCHOR TYPES: SEE SHEET 10 FOR DESCRIPTION

NO ANCHOR OPTION REQUIRES THE USE OF 9956 STEEL REINFORCING – TYPICAL

"A2" – (2) ANCHORS TYPE "A" LOCATED AS SHOWN BELOW

"B2" – (2) ANCHORS TYPE "B" LOCATED AS SHOWN BELOW

"C2" – (2) ANCHORS TYPE "C" LOCATED AS SHOWN BELOW

"C3" – (3) ANCHORS TYPE "C" LOCATED AS SHOWN BELOW

"C5" – (5) ANCHORS TYPE "C" LOCATED AS SHOWN BELOW

STANDARD JAMB

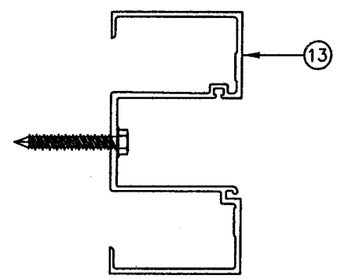

FG–5174

NO ANCHOR JAMB REINFORCED

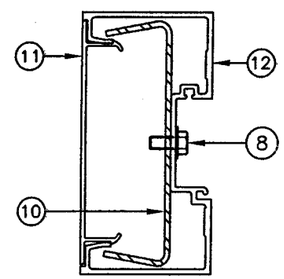

FG–5173/FG–5167 JAMB
9956 REINFORCING

JAMB LOAD CAPACITY (PSF) FOR 1/4" MAX. SHIM SPACE							
NOMINAL DIMS.		ANCHOR TYPE					
		NO ANCHOR	"A2"	"B2"	"C2"	"C3"	"C5"
WIDTH (W)	FRAME HEIGHT	EXT. (+) INT. (–)	EXT. (+) INT. (–)	EXT. (+) INT. (–)	EXT. (+) INT. (–)	EXT. (+) INT. (–)	EXT. (+) INT. (–)
36"	77"	+70.0/–80.0	+70.0/–80.0	+70.0/–80.0	+60.0/–65.0	+70.0/–80.0	+70.0/–80.0
42"		+70.0/–80.0	+70.0/–80.0	+70.0/–80.0	+60.0/–65.0	+70.0/–80.0	+70.0/–80.0
48"		+70.0/–80.0	+70.0/–80.0	+70.0/–80.0	+60.0/–65.0	+70.0/–80.0	+70.0/–80.0
54"		+70.0/–80.0	+70.0/–80.0	+70.0/–80.0	–	+70.0/–80.0	+70.0/–80.0
60"		+70.0/–80.0	+70.0/–80.0	+70.0/–80.0	–	+70.0/–80.0	+70.0/–80.0
36"	89"	+70.0/–80.0	+70.0/–80.0	+70.0/–80.0	+60.0/–65.0	+70.0/–80.0	+70.0/–80.0
42"		+70.0/–80.0	+70.0/–80.0	+70.0/–80.0	+60.0/–65.0	+70.0/–80.0	+70.0/–80.0
48"		+70.0/–80.0	+70.0/–80.0	+70.0/–80.0	+60.0/–65.0	+70.0/–80.0	+70.0/–80.0
54"		+70.0/–80.0	+70.0/–80.0	+70.0/–80.0	–	+70.0/–80.0	+70.0/–80.0
60"		+70.0/–80.0	+70.0/–80.0	+70.0/–80.0	–	+70.0/–80.0	+70.0/–80.0
36"	101"	+70.0/–80.0	+70.0/–80.0	+70.0/–80.0	+60.0/–65.0	+70.0/–80.0	+70.0/–80.0
42"		+70.0/–80.0	+70.0/–80.0	+70.0/–80.0	+60.0/–65.0	+70.0/–80.0	+70.0/–80.0
48"		+70.0/–80.0	+70.0/–80.0	+70.0/–80.0	+60.0/–65.0	+70.0/–80.0	+70.0/–80.0
54"		+70.0/–80.0	+70.0/–80.0	+70.0/–80.0	–	+70.0/–80.0	+70.0/–80.0
60"		+60.0/–65.0	+70.0/–80.0	+70.0/–80.0	–	+70.0/–80.0	+70.0/–80.0
36"	120"	+70.0/–80.0	+70.0/–80.0	+70.0/–80.0	+60.0/–65.0	–	+70.0/–80.0
42"		+70.0/–80.0	+70.0/–80.0	+70.0/–80.0	+60.0/–65.0	–	+70.0/–80.0
48"		+70.0/–80.0	+70.0/–80.0	+70.0/–80.0	+60.0/–65.0	–	+70:0/–80.0
54"		+70.0/–80.0	+70.0/–80.0	+70.0/–80.0	–	–	+70.0/–80.0
60"		+70.0/–80.0	+70.0/–80.0	+70.0/–80.0	–	–	+70.0/–80.0

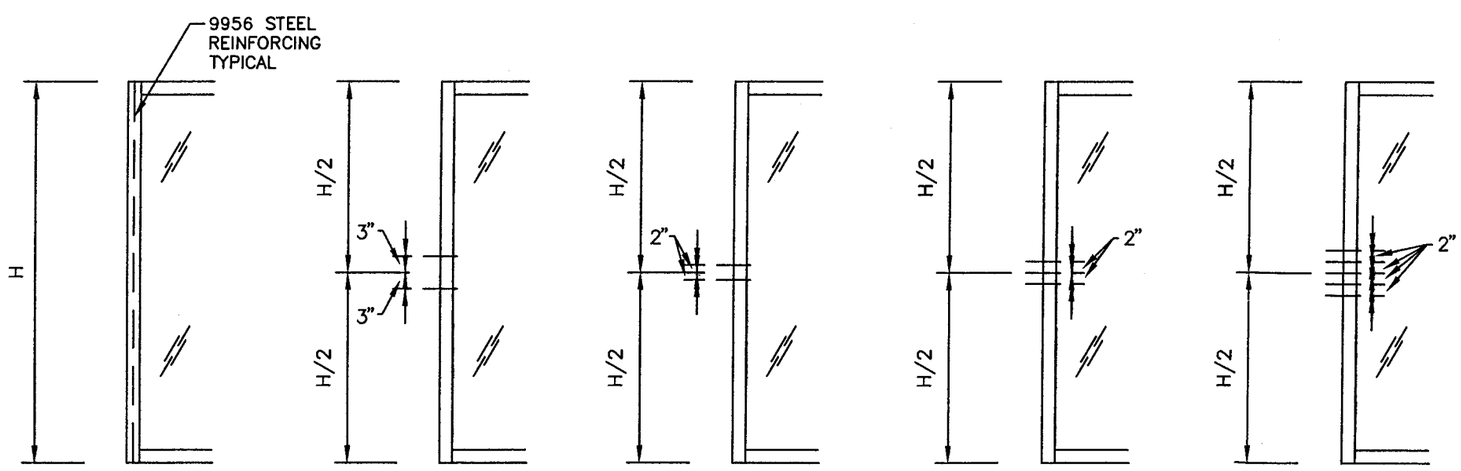

NO ANCHORS A2 B2 / C2 C3 C5

BROMLEY COOK ENGINEERING, INC.
STRUCTURAL ENGINEERING SERVICES
5440 NW 33rd Avenue – Suite 100
FORT LAUDERDALE, FLORIDA 33309
TEL: (954) 772-4624 FAX: (954) 772-4634

AUG 26 2009

WILLIAM D. COOK, P.E., SECB
FLA P.E. # 43904 – FLA S.I. # 2008

FOR MIAMI–DADE CO. B.C.C.O.

PRODUCT RENEWED
as complying with the Florida
Building Code
Acceptance No 09-0520.10
Expiration Date AUG. 19, 2014
By
Miami Dade Product Control
Division

REV	BY	DATE	DESCRIPTION
2	WDC	8/25/09	PER CITY COMMENTS
1	DGI	4/17/09	ENTIRE RE–DRAW

MANUAL COMP

VISTAWALL
ARCHITECTURAL PRODUCTS
803 AIRPORT RD. TERRELL, TX 75160
(972) 551-6100
THE VISTAWALL GROUP
BUTLER MANUFACTURING COMPANY

PROJECT
PRODUCT APPROVAL DRAWINGS
FG-5100 STOREFRONT SYSTEM

PROJECT NO.

DRAWN DGI | DATE 4/17/09

SCALE NOTED

DRAWING NO. FG–5100

SHEET 8 OF 11

ANCHOR LOAD CAPACITY (PSF) FOR 1/4" MAX. SHIM SPACE

NOMINAL DIMS.		ANCHOR TYPE					
		"A1"	"A2"	"B1"	"B2"	"C2"	"C3"
WIDTH (W)	FRAME HEIGHT	EXT. (+) INT. (−)	EXT. (+) INT. (−)	EXT. (+) INT. (−)	EXT. (+) INT. (−)	EXT. (+) INT. (−)	EXT. (+) INT. (−)
30"	77"	+70.0/−80.0	+70.0/−80.0	+70.0/−80.0	+70.0/−80.0	+70.0/−80.0	+70.0/−80.0
36"		+70.0/−80.0	+70.0/−80.0	+70.0/−80.0	+70.0/−80.0	+70.0/−80.0	+70.0/−80.0
40"		+70.0/−80.0	+70.0/−80.0	+70.0/−80.0	+70.0/−80.0	+70.0/−80.0	+70.0/−80.0
44"		+70.0/−80.0	+70.0/−80.0	+70.0/−80.0	+70.0/−80.0	+70.0/−80.0	+70.0/−80.0
48"		+70.0/−80.0	+70.0/−80.0	+70.0/−80.0	+70.0/−80.0	+70.0/−80.0	+70.0/−80.0
52"		+70.0/−80.0	+70.0/−80.0	+70.0/−80.0	+70.0/−80.0	+70.0/−80.0	+70.0/−80.0
56"		+70.0/−80.0	+70.0/−80.0	+70.0/−80.0	+70.0/−80.0	+70.0/−80.0	+70.0/−80.0
60"		+70.0/−80.0	+70.0/−80.0	+70.0/−80.0	+70.0/−80.0	+70.0/−80.0	+70.0/−80.0
30"	89"	+70.0/−80.0	+70.0/−80.0	+70.0/−80.0	+70.0/−80.0	+70.0/−80.0	+70.0/−80.0
36"		+70.0/−80.0	+70.0/−80.0	+70.0/−80.0	+70.0/−80.0	+70.0/−80.0	+70.0/−80.0
40"		+70.0/−80.0	+70.0/−80.0	+70.0/−80.0	+70.0/−80.0	+70.0/−80.0	+70.0/−80.0
44"		+70.0/−80.0	+70.0/−80.0	+70.0/−80.0	+70.0/−80.0	+70.0/−80.0	+70.0/−80.0
48"		+70.0/−80.0	+70.0/−80.0	+70.0/−80.0	+70.0/−80.0	+70.0/−80.0	+70.0/−80.0
52"		+70.0/−80.0	+70.0/−80.0	+70.0/−80.0	+70.0/−80.0	+70.0/−80.0	+70.0/−80.0
56"		+60.0/−65.0	+70.0/−80.0	+70.0/−80.0	+70.0/−80.0	+60.0/−65.0	+70.0/−80.0
60"		+60.0/−65.0	+70.0/−80.0	+70.0/−80.0	+70.0/−80.0	+60.0/−65.0	+70.0/−80.0
30"	101"	+70.0/−80.0	+70.0/−80.0	+70.0/−80.0	+70.0/−80.0	+70.0/−80.0	+70.0/−80.0
36"		+70.0/−80.0	+70.0/−80.0	+70.0/−80.0	+70.0/−80.0	+70.0/−80.0	+70.0/−80.0
40"		+70.0/−80.0	+70.0/−80.0	+70.0/−80.0	+70.0/−80.0	+70.0/−80.0	+70.0/−80.0
44"		+70.0/−80.0	+70.0/−80.0	+70.0/−80.0	+70.0/−80.0	+70.0/−80.0	+70.0/−80.0
48"		+60.0/−65.0	+70.0/−80.0	+70.0/−80.0	+70.0/−80.0	+60.0/−65.0	+70.0/−80.0
52"		+60.0/−65.0	+70.0/−80.0	+70.0/−80.0	+70.0/−80.0	+60.0/−65.0	+70.0/−80.0
56"		+60.0/−65.0	+70.0/−80.0	+70.0/−80.0	+70.0/−80.0	+60.0/−65.0	+70.0/−80.0
60"		−	+70.0/−80.0	+70.0/−80.0	+70.0/−80.0	−	+70.0/−80.0
30"	120"	+70.0/−80.0	+70.0/−80.0	+70.0/−80.0	+70.0/−80.0	+70.0/−80.0	+70.0/−80.0
36"		+70.0/−80.0	+70.0/−80.0	+70.0/−80.0	+70.0/−80.0	+70.0/−80.0	+70.0/−80.0
40"		+60.0/−65.0	+70.0/−80.0	+70.0/−80.0	+70.0/−80.0	+60.0/−65.0	+70.0/−80.0
44"		+60.0/−65.0	+70.0/−80.0	+70.0/−80.0	+70.0/−80.0	+60.0/−65.0	+70.0/−80.0
48"		+60.0/−65.0	+70.0/−80.0	+70.0/−80.0	+70.0/−80.0	+60.0/−65.0	+70.0/−80.0
52"		−	+70.0/−80.0	+60.0/−65.0	+70.0/−80.0	−	+70.0/−80.0
56"		−	+70.0/−80.0	+60.0/−65.0	+70.0/−80.0	−	+70.0/−80.0
60"		−	+70.0/−80.0	+60.0/−65.0	+70.0/−80.0	−	+70.0/−80.0

WOOD BUCKS NOT BY VISTAWALL MUST SUPPORT LOADS IMPOSED BY GLAZING SYSTEM AND TRANSFER THEM TO THE BUILDING STRUCTURE.

TYPICAL ANCHOR CLUSTERS

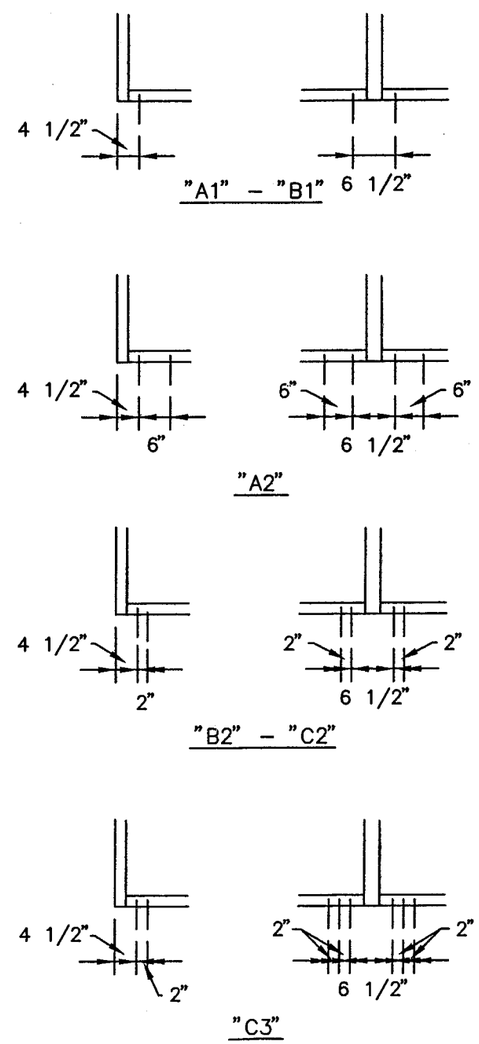

"A1" – (1) ANCHORS TYPE "A" EA. SIDE OF MULLION OR JAMB

"A2" – (2) ANCHORS TYPE "A" EA. SIDE OF MULLION OR JAMB

"B1" – (1) ANCHOR TYPE "B" EA. SIDE OF MULLION OR JAMB

"B2" – (2) ANCHORS TYPE "B" EA. SIDE OF MULLION OR JAMB

"C2" – (2) ANCHORS TYPE "C" EA. SIDE OF MULLION OR JAMB

"C3" – (3) ANCHORS TYPE "C" EA. SIDE OF MULLION OR JAMB

ALL OTHER ANCHORS TO BE SPACED AS PER ELEVATION

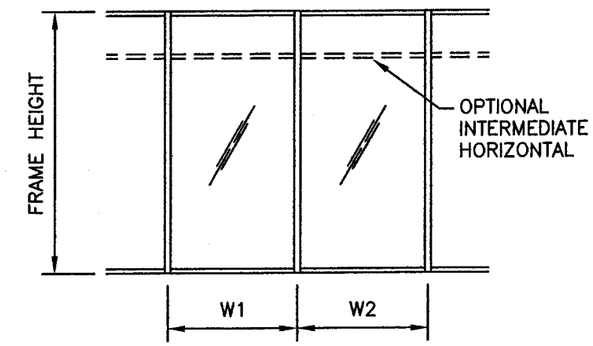

$$\text{WIDTH (W)} = \frac{W1 + W2}{2}$$

TYPICAL ANCHORS:

SEE ELEVATIONS FOR SPACING

TYPE "A" – 3/8" DIAMETER WEDGE BOLT

THRU 1BY WOOD OR 2BY WOOD BUCKS INTO 2500 PSI MIN. CONC. OR C–90 GROUT FILLED BLOCK. 2" MIN. EMBED. INTO CONC. OR MASONRY

DIRECTLY INTO 2500 PSI MIN. CONCRETE
2" MIN. EMBED. INTO CONC.

3 1/2" MIN. EDGE DISTANCE
6" MIN. SPACING

TYPE "B" – 3/8" DIAMETER TEK SCREWS

INTO METAL STRUCTURES
(STEEL OR ALUM. 1/8" MIN. THICK.)

STEEL: Fy – 36 KSI MIN.
ALUMINUM: 6063–T5 MIN.
(STEEL IN CONTACT WITH ALUM. TO BE PLATED OR PAINTED)

1 1/2" MIN. EDGE DISTANCE
2" MIN. SPACING

TYPE "C" – 3/8" DIAMETER LAG SCREW

INTO 2BY WOOD BUCKS OR WOOD STRUCTURES
3" MIN. PENETRATION INTO #2 SYP BUCK

1 1/2" MIN. EDGE DISTANCE
2" MIN. SPACING

BROMLEY COOK ENGINEERING, INC.
STRUCTURAL ENGINEERING SERVICES
5440 NW 33rd Avenue – Suite 100
FORT LAUDERDALE, FLORIDA 33309
TEL: (954) 772-4624 FAX: (954) 772-4634

AUG 26 2009

WILLIAM D. COOK, P.E., SECB
FLA P.E. # 43904 – FLA S.I. # 2008

FOR MIAMI–DADE CO. B.C.C.O.

PRODUCT RENEWED
as complying with the Florida Building Code
Acceptance No 09-0520.10
Expiration Date AUG. 19, 2014
By
Miami Dade Product Control Division

REV	BY	DATE	DESCRIPTION
2	WDC	8/25/09	PER CITY COMMENTS
1	DGI	4/17/09	ENTIRE RE–DRAW

MANUAL COMP

VISTAWALL ARCHITECTURAL PRODUCTS
803 AIRPORT RD. TERRELL, TX 75160
(972) 551-6100
THE VISTAWALL GROUP
BUTLER MANUFACTURING COMPANY

PROJECT: PRODUCT APPROVAL DRAWINGS FG-5100 STOREFRONT SYSTEM

PROJECT NO.

DRAWN DGI | DATE 4/17/09

SCALE NOTED

DRAWING NO. FG–5100

SHEET 9 OF 11

ITEM No.	PART NUMBER	DESCRIPTION	DIMENSIONS	MATERIAL	MANUFACTURER	NOTES
1.	FG-1133	EXTERIOR GLAZING GASKET	.197 SPACE	70 DUROMETER EPDM	TRELLEBORG	FOR 1 5/16" OR 5/8" GLAZING
2.	FS-119	FOR ATTACHING DS-104 DOOR STOP @ HEAD	#10 X 1 3/8" PFH "B"	STEEL	VARIES	HOLES PRE-PUNCHED 12" O.C.
3.	FG-5186	SETTING BLOCK SILL & HORIZONAL	4" LONG	SILICONE	VARIES	
4.	FG-5187	TRANSITION SETTING BLOCK @ SILL & HORIZONTAL	4" LONG	EPDM	VARIES	
5.	FG-5185	SPACER GASKET	.25 X .25	SILICONE	VARIES	
6.	SM-5601	JOINT SEALANT TAPE	.125 X .50 VARIES	BUTYL	SCHNEE-MOREHEAD	
7.	FS-8	SPLINE ASSEMBLY SCREW	#14 X 1 HHSTS	STEEL	VARIES	
8.	FS-38	ATTACH STEEL REINFORCEMENT	1/4-20 X ½" HH TYPE F	STEEL	VARIES	1" FROM EACH END
9.	9955	STEEL CHANNEL FOR FG-5168 @ MULLION	1.25 X 4.562 X .250	A36 STEEL	VARIES	FULL MULLION LENGTH
10.	9956	STEEL CHANNEL FOR FG-5173 @ ALTERNATE JAMB	1.25 X 4.681 X 12 GA.	A36 STEEL	VARIES	ALT. WALL JAMB, FULL MULLION LENGTH
11.	FG-5167	FLAT FILLER @ JAMB	.780 X 4.66 X .080	6063-T6 ALUMINUM	VISTAWALL	USE @ ALT. WALL JAMB
12.	FG-5173	STD. MULLION / NO ANCHOR JAMB	2.50 X 5.00 X .094	6063-T6 ALUMINUM	VISTAWALL	
13.	FG-5174	JAMB	2.50 X 5.00 X .094	6063-T6 ALUMINUM	VISTAWALL	
14.	FG-5175	HEAVY MULLION	2.5 X 5.00 X .094	6063-T6 ALUMINUM	VISTAWALL	
15.	FG-5176	INTERMEDIATE HORIZONTAL	2.50 X 4.98 X .080	6063-T6 ALUMINUM	VISTAWALL	.
16.	FG-5177	GLASS STOP	1.25 X 1.41 X .078	6063-T6 ALUMINUM	VISTAWALL	
17.	FG-5178	HEAD/SILL	2.50 X 4.98 X .080	6063-T6 ALUMINUM	VISTAWALL	.
18.	FG-5179	OPEN BACK MULLION FILLER	.780 X 4.66 X .08	6063-T6 ALUMINUM	VISTAWALL	
19.	FG-5180	SUB-SILL FLASHING	2.62 X 5.40 X .078	6063-T6 ALUMINUM	VISTAWALL	
20.	FG-5181	TRANSOM SASH	1.00 X 2.69 X .062	6063-T5 ALUMINUM	VISTAWALL	
21.	FG-5182	TRANSOM GLASS STOP	1.00 X .767 X .062	6063-T5 ALUMINUM	VISTAWALL	
22.	FG-5183	TRANSITION GLAZING ADAPTER	.72 X .61 X .078	6063-T5 ALUMINUM	VISTAWALL	.
23.	FG-5184	SETTING CHAIR	1.062 X 1.59 X .094	6063-T5 ALUMINUM	VISTAWALL	CUT 4" LONG
24.	FG5000-FP-10	SILL FLASHING END DAM	2.50 X 1.00 X .062	6063-T5 ALUMINUM	VISTAWALL	5.00" LONG
25.	FG5100-FP-5	WATER DIVERTER	.876 X 1.465 X .032	RIGID PVC	VISTAWALL	CUT 1.562 LONG & LOCATE @ EACH END
26.	DOW 995	STRUCTURAL SILICONE	FILL SPACE	SILICONE	DOW CORNING	
27.	VOID					
28.	FASTENER	SCREW FOR ATTACHING FG5000-FP-10 TO FG-5166	#10-24 X 3/8" UCPFH	STEEL	VARIES	2 EACH REQUIRED PER END DAM
29.	FASTENER	FOR ATTACHING SUBSILL FLASHING TO CONCRETE SUBSTRATE	3/16" X 2" SHWH	STAINLESS STEEL	TAPCON	1" MIN. EMBEDMENT NON-STRUCTURAL
30.	FASTENER	FOR ATTACHING SUBSILL FLASHING TO WOOD SUBSTRATE	3/16" X 2" LAG BOLT	STEEL	VARIES	1" MIN. EMBEDMENT NON-STRUCTURAL
31.	FASTENER	FOR ATTACHING SUBSILL FLASHING TO STL SUBSTRATE	3/16" X 1" DRILL FLEX #5	STEEL	VARIES	1" MIN. EMBEDMENT NON-STRUCTURAL
32.	HP-17	SETTING BLOCK	3/4" X 1/4" X 4"	EPDM	VARIES	
33.	VOID					
34.	FG-5168	DOOR JAMB	2.50 X 5.00 X .125	6063-T6 ALUMINUM	VISTAWALL	
35.	FG-5163	SNAP IN DOOR STOP	.50 X 1.36 X .062	6063-T6 ALUMINUM	VISTAWALL	
36.	DS-104	OFFSET ARM DOOR STOP	1.88 X 2.00 X .094	6063-T6 ALUMINUM	VISTAWALL	
37.	FG-5172	DOOR TRANSOM	2.50 X 4.98 X .135	6063-T6 ALUMINUM	VISTAWALL	
38.	SPECTREM 2	STRUCTURAL SILICONE	FILL SPACE	SILICONE	TREMCO	
39.	FASTENER	FOR ATTACHING HEAD/SILL & JAMB TO STL. SUBSTRATE	3/8" X 1 1/2" TEK SCREW	STEEL	VARIES	2" MIN. SPACING
40.	FASTENER	FOR ATTACHING HEAD/SILL & JAMB TO WOOD SUBSTRATE	3/8" X 3 1/2" LONG LAG BOLTS	STEEL	VARIES	3" MIN. EMBEDMENT, 2" MIN. SPACING
41.	FASTENER	FOR ATTACHING SILL & JAMB TO CONCRETE SUBSTRATE	3/8" X 2 1/2" LONG LTD TAPCON	STEEL	VARIES	2" MIN. EMBEDMENT, 6" MIN. SPACING
42.	FASTENER	FOR ANCHORING TH-57 THRESHOLD TO WOOD SUBSTRATE	#14 X 3 1/2" WOOD SCREW	STEEL	VARIES	3" MIN. EMBEDMENT
43.	FASTENER	FOR ANCHORING TH-57 THRESHOLD TO STEEL SUBSTRATE	1/4" GRADE 2 MACHINE SCREW	STEEL	VARIES	
44.	FASTENER	FOR ANCHORING TH-57 THRESHOLD TO CONCRETE SUBSTRATE	1/4" X 3" TAPCON	STEEL	VARIES	2" MIN. EMBEDMENT
45.	VOID					

BILL OF MATERIALS

BROMLEY COOK ENGINEERING, INC.
STRUCTURAL ENGINEERING SERVICES
5440 NW 33rd Avenue - Suite 100
FORT LAUDERDALE, FLORIDA 33309
TEL: (954) 772-4624 FAX: (954) 772-4634

AUG 26 2009

WILLIAM D. COOK, P.E., SECB
FLA P.E. # 43904 - FLA S.I. # 2008

FOR MIAMI-DADE CO. B.C.C.O.

PRODUCT RENEWED
as complying with the Florida Building Code
Acceptance No 09-0520.10
Expiration Date AUG. 19, 2014
By
Miami Dade Product Control Division

REV	BY	DATE	DESCRIPTION
2	WDC	8/25/09	PER CITY COMMENTS
1	DGI	4/17/09	ENTIRE RE-DRAW

MANUAL COMP

VISTAWALL
ARCHITECTURAL PRODUCTS
803 AIRPORT RD. TERRELL, TX 75160
(972) 551-6100
THE VISTAWALL GROUP
BUTLER MANUFACTURING COMPANY

PROJECT
PRODUCT APPROVAL DRAWINGS
FG-5100 STOREFRONT SYSTEM

PROJECT NO.

DRAWN DGI | DATE 4/17/09

SCALE NOTED

DRAWING NO. FG-5100

SHEET 10 OF 11

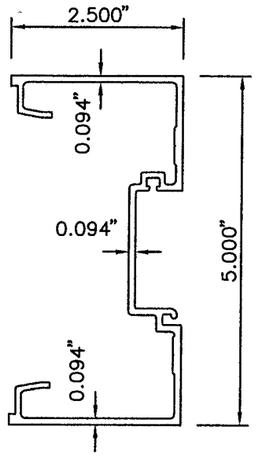

(12) FG-5173

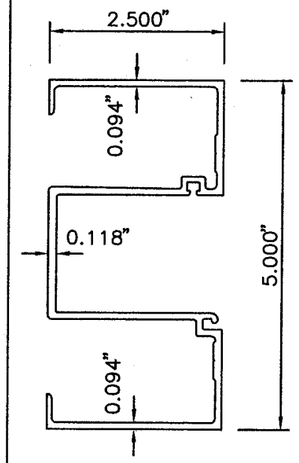

(13) FG-5174

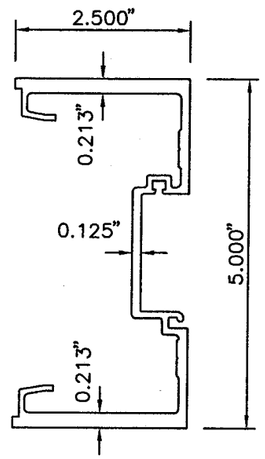

(14) FG-5175

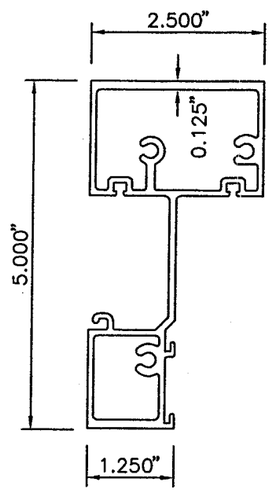

(15) FG-5176

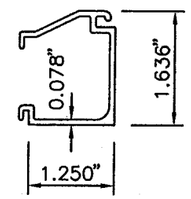

(16) FG-5177

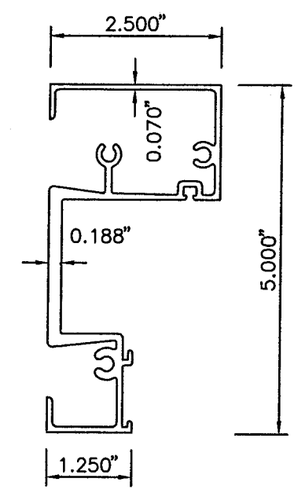

(17) FG-5178

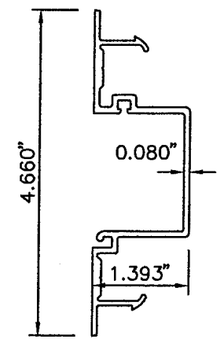

(18) FG-5179

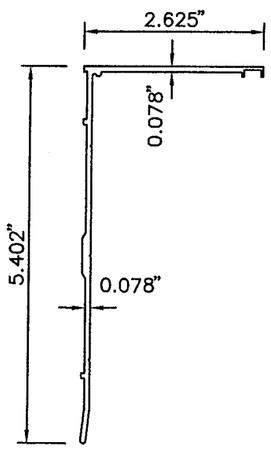

(19) FG-5180

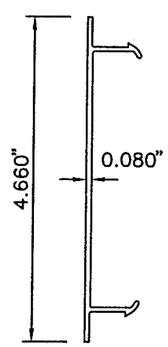

(11) FG-5167

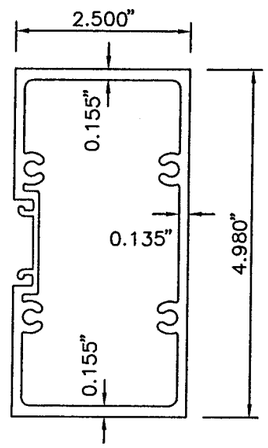

(37) FG-5172

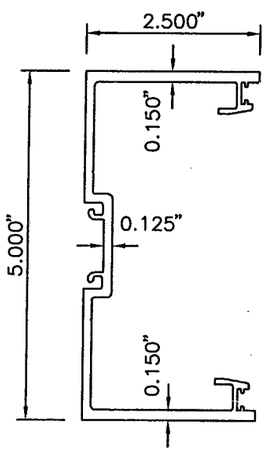

(34) FG-5168

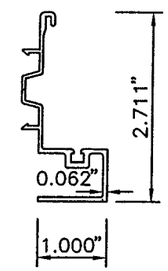

(20) FG-5181

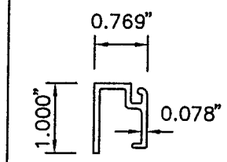

(21) FG-5182

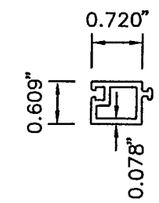

(22) FG-5183

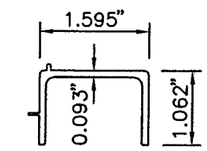

(23) FG-5184

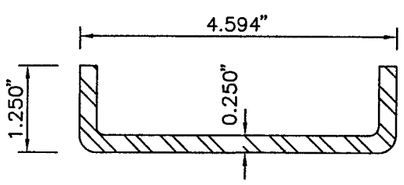

(9) 9955

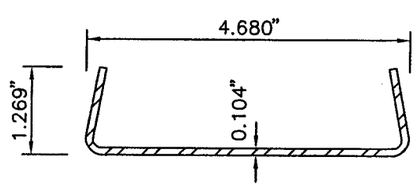

(10) 9956

REV	BY	DATE	DESCRIPTION
2	WDC	8/25/09	PER CITY COMMENTS
1	DGI	4/17/09	ENTIRE RE-DRAW

MANUAL COMP

VISTAWALL ARCHITECTURAL PRODUCTS
803 AIRPORT RD. TERRELL, TX 75160
(972) 551-6100
THE VISTAWALL GROUP
BUTLER MANUFACTURING COMPANY

PROJECT
PRODUCT APPROVAL DRAWINGS
FG-5100 STOREFRONT SYSTEM

PROJECT NO.

DRAWN: DGI | DATE: 4/17/09

SCALE: NOTED

DRAWING NO. FG-5100

SHEET 11 OF 11

BROMLEY COOK ENGINEERING, INC.
STRUCTURAL ENGINEERING SERVICES
5440 NW 33rd Avenue – Suite 100
FORT LAUDERDALE, FLORIDA 33309
TEL: (954) 772-4024 FAX: (954) 772-4634

AUG 26 2009

WILLIAM D. COOK, P.E., SECB
FLA P.E. # 43904 – FLA S.I. # 2008

FOR MIAMI-DADE CO. B.C.C.O.

PRODUCT RENEWED
as complying with the Florida
Building Code
Acceptance No 09-0520.10
Expiration Date AUG. 19, 2014
By
Miami Dade Product Control
Division