MIAMI-DADE COUNTY
BUILDING CODE COMPLIANCE OFFICE (BCCO)
PRODUCT CONTROL DIVISION

MIAMI-DADE COUNTY, FLORIDA
METRO-DADE FLAGLER BUILDING
140 WEST FLAGLER STREET, SUITE 1603
MIAMI, FLORIDA 33130-1563
(305) 375-2901 FAX (305) 372-6339
www.miamidade.gov/buildingcode

NOTICE OF ACCEPTANCE (NOA)

Miami Wall Systems, Inc.
701 West 25th Street
Hialeah, FL 33010

SCOPE:

This NOA is being issued under the applicable rules and regulations governing the use of construction materials. The documentation submitted has been reviewed by Miami-Dade County Product Control Division and accepted by the Board of Rules and Appeals (BORA) to be used in Miami Dade County and other areas where allowed by the Authority Having Jurisdiction (AHJ).

This NOA shall not be valid after the expiration date stated below. The Miami-Dade County Product Control Division (In Miami Dade County) and/or the AHJ (in areas other than Miami Dade County) reserve the right to have this product or material tested for quality assurance purposes. If this product or material fails to perform in the accepted manner, the manufacturer will incur the expense of such testing and the AHJ may immediately revoke, modify, or suspend the use of such product or material within their jurisdiction. BORA reserves the right to revoke this acceptance, if it is determined by Miami-Dade County Product Control Division that this product or material fails to meet the requirements of the applicable building code. This product is approved as described herein, and has been designed to comply with the Florida Building Code, including the High Velocity Hurricane Zone.

DESCRIPTION: Series 6000 Aluminum Window Wall System – L.M.I.

APPROVAL DOCUMENT: Drawing No. **NOA 6000**, titled "Window Wall Systems Series 6000", sheets 1 through 12 of 12, dated 5/18/09 prepared by manufacturer, signed and sealed by Jorge E. Valdes, P.E., bearing the Miami-Dade County Product Control Approval stamp with the Notice of Acceptance number and approval date by the Miami-Dade County Product Control Division.

MISSILE IMPACT RATING: Large and Small Missile Impact Resistant

LABELING: Each unit shall bear a permanent label with the manufacturer's name or logo, city, state and following statement: "Miami-Dade County Product Control Approved", unless otherwise noted herein.

RENEWAL of this NOA shall be considered after a renewal application has been filed and there has been no change in the applicable building code negatively affecting the performance of this product.

TERMINATION of this NOA will occur after the expiration date or if there has been a revision or change in the materials, use, and/or manufacture of the product or process. Misuse of this NOA as an endorsement of any product, for sales, advertising or any other purposes shall automatically terminate this NOA. Failure to comply with any section of this NOA shall be cause for termination and removal of NOA.

ADVERTISEMENT: The NOA number preceded by the words Miami-Dade County, Florida, and followed by the expiration date may be displayed in advertising literature. If any portion of the NOA is displayed, then it shall be done in its entirety.

INSPECTION: A copy of this entire NOA shall be provided to the user by the manufacturer or its distributors and shall be available for inspection at the job site at the request of the Building Official.

This NOA consists of this page 1 and evidence page E-1 as well as approval document mentioned above.

The submitted documentation was reviewed by **Manuel Perez, P.E.**

MIAMI-DADE COUNTY APPROVED

Miami Wall Systems, Inc.

NOTICE OF ACCEPTANCE: EVIDENCE SUBMITTED

A. DRAWINGS

1. Manufacturer's die drawings and sections.
2. Drawing No **NOA 6000**, Sheets 1 through 12 of 12, titled "Window Wall Systems Series 6000", and dated 5/18/09 prepared by manufacturer, signed and sealed by Jorge E. Valdes, P.E.

B. TESTS

1. Test reports on: 1) Air Infiltration Test, per FBC, TAS 202-94
   2) Uniform Static Air Pressure Test, Loading per FBC TAS 202-94
   3) Water Resistance Test, per FBC, TAS 202-94
   4) Small Missile Impact Test per FBC, TAS 201-94
   5) Cyclic Wind Pressure Loading per FBC, TAS 203-94

   along with marked-up drawings and installation diagram of an aluminum window wall system, prepared by Fenestration Testing Laboratory, Inc. Test Report No. **FTL-5910**, dated May 8, 2009, signed and sealed by Michael R. Wenzel, P.E.

C. CALCULATIONS

1. Anchor verification calculations and structural analysis, complying with FBC-2004, prepared, signed and sealed by Jorge E. Valdes, P.E. dated 5/19/09.
   Complies with ASTM E1300-02/03

D. QUALITY ASSURANCE

1. Miami Dade Building Code Compliance Office (BCCO).

E. MATERIAL CERTIFICATIONS

1. Notice of Acceptance No. **09-0312.03** issued to E.I. DuPont DeNemours & Co., Inc. for their "**DuPont Sentry Glass® Interlayer**" dated 05/13/09, expiring on 01/14/12.
2. Notice of Acceptance No. **09-0312.02** issued to E.I. DuPont DeNemours & Co., Inc. for their **"DuPont Butacite® PVB, Interlayer"** dated 05/13/09, expiring on 12/11/10.

F. STATEMENTS

1. Statement letter of conformance, dated May 11, 2009, signed and sealed by Jorge E. Valdes, P.E.
2. Statement letter of no financial interest, dated May 12, 2009, signed and sealed by Jorge E. Valdes, P.E.
3. Laboratory compliance letter for Test Report No. **FTL-5910**, issued by Fenestration Testing Laboratory, Inc., dated May 11, 2009, signed and sealed by Michael R. Wenzel, P.E.

G. OTHERS

1. None.

Manuel Perez

Manuel Perez, P.E.
Product Control Examiner
NOA No. 09-0520.11
Expiration Date: August 5, 2014
Approval Date: August 5, 2009

INDEX

DESCRIPTION	PAGES
• TYPICAL ELEVATIONS	1
• GLASS LOAD CHART	2
• SECTIONS	3 THRU 5
• JAMB LOAD CHART	6
• MULLION LOAD CHART	7
• ANCHORAGE AT JAMB ENDS FOR FRAME HEIGHT UP TO 125"	8
• ANCHORAGE AT MULLION ENDS FOR FRAME HEIGHT UP TO 125"	9
• ANCHORAGE AT JAMB ENDS FOR FRAME HEIGHT UP TO 168"	10
• ANCHORAGE AT MULLION FOR FRAME HEIGHT UP TO 168"	11
• EXTRUSION DETAILS & BILL MATERIALS	12

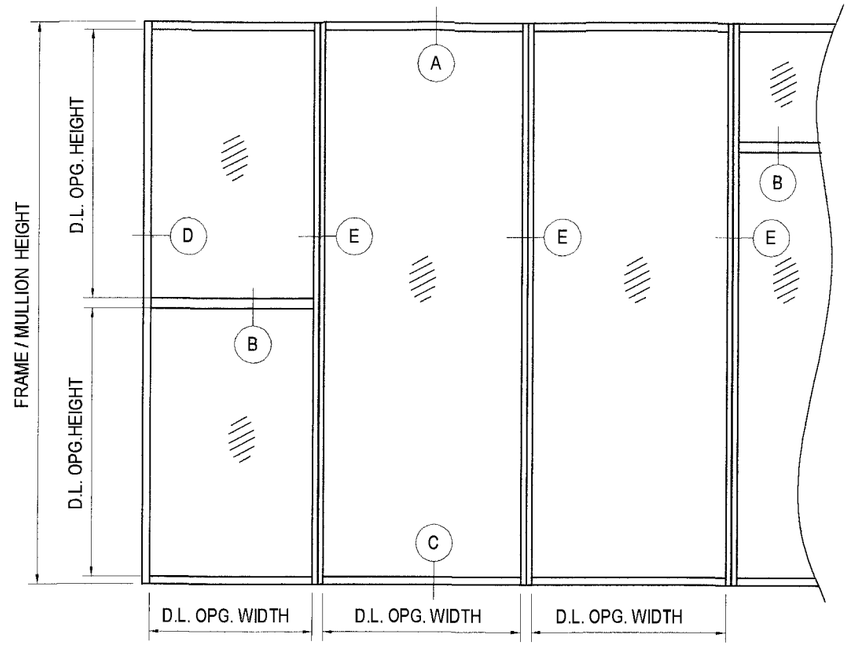

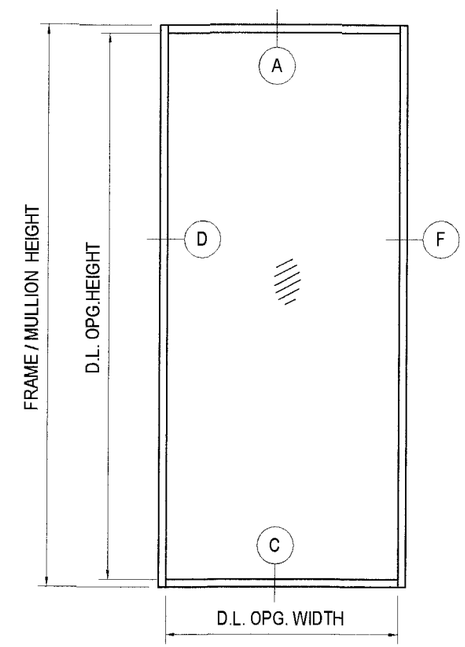

WINDOW WALL TYPICAL ELEVATIONS

SERIES 6000 ALUMINUM WINDOW WALL SYSTEM (L.M.I.)

THIS PRODUCT HAS BEEN DESIGNED & TESTED IN ACCORDANCE WITH THE 2007 FLORIDA BUILDING CODE (HIGH VELOCITY HURRICANE ZONE)

HEAD AND SILL USE SAME FASTENER SPACING.

NO ANCHORS REQUIRED AT JAMBS.

THIS PRODUCT IS LARGE MISSILE IMPACT RATED (L.M.I). ITS INSTALLATION IS MANDATORY IN STRUCTURES AT H.V.H.Z. WHERE OPENING HAS NOT IMPACT SHUTTERS & IS LOCATED UP TO 30 FT. ABOVE GRADE.

INSTRUCTIONS

USE CHARTS AS FOLLOWS:

STEP 1: DETERMINE DESIGN WIND LOAD USING APPLICABLE ASCE 7 STANDARD.

STEP 2: SEE CHARTS ON SHEET 2 FOR DESIGN LOAD CAPACITY OF DESIRED GLASS SIZE.

STEP 3: CHECK JAMBS AND MULLIONS CAPACITY FOR GIVEN SPACING AND HEIGHT USING CHARTS ON SHEETS 6 & 7. THE CAPACITY SHOULD EXCEED THE DESIGN LOAD.

STEP 4: SELECT ANCHOR OPTION ON SHEETS 8, 9, 10 & 11. THE CAPACITY SHOULD EXCEED THE DESIGN LOAD.

Approved as complying with the Florida Building Code
Date AUG 5, 2009
NOA# 09-0520.11
Miami-Dade Product Control Division
By Manuel Perez

Jorge E. Valdes
Fla. PE# 67398
C.A.N. 28565

MAY 19 2009

Miami Wall Systems, Inc.
701 West 25th Street
Hialeah, Florida. 33010
Phone:(305) 888-2300 Fax:(305) 888-3058

WINDOW WALL SYSTEMS SERIES 6000

ELEVATIONS
GENERAL NOTES

NO.	DATE	REVISION

DATE: 5/18/2009
SCALE: AS NOTED
DWG. BY: L.R.A
CHK. BY: JV
DWG NO.: NOA 6000
SHEET 1 OF 12

NOMINAL DIMENSIONS (INCHES)		ALLOWABLE GLASS LOAD CAPACITY (p.s.f.)
D.L.O WIDTH	D.L.O HEIGHT	GL-1 & GL-2
44	76	±130.0
52		±130.0
60		±130.0
68		±130.0
76		±130.0
84		±130.0
48	84	±130.0
56		±130.0
60		±130.0
68		±130.0
76		±130.0
84		±120.0
52	88	±130.0
56		±130.0
64		±130.0
72		±130.0
80		±120.0
84		±90.0
44	92	±130.0
52		±130.0
60		±130.0
68		±130.0
76		±120.0
84		±90.0
44	96	±130.0
52		±130.0
60		±130.0
64		±130.0
72		±120.0
84		±90.0

NOMINAL DIMENSIONS (INCHES)		ALLOWABLE GLASS LOAD CAPACITY (p.s.f.)
D.L.O WIDTH	D.L.O HEIGHT	GL-1 & GL-2
48	100	±130.0
58		±130.0
64		±130.0
72		±120.0
76		±90.0
84		±90.0
44	104	±130.0
52		±130.0
64		±130.0
68		±120.0
76		±90.0
84		±90.0
52	108	±130.0
60		±130.0
64		±120.0
68		±90.0
74		±90.0
82		±90.0
52	112	±130.0
56		±130.0
64		±120.0
66		±90.0
74		±90.0
80		±90.0
44	116	±130.0
48		±130.0
52		±130.0
56		±130.0
60		±120.0
62		±120.0
42	120	±130.0
46		±130.0
50		±130.0
54		±130.0
58		±120.0
60		±120.0

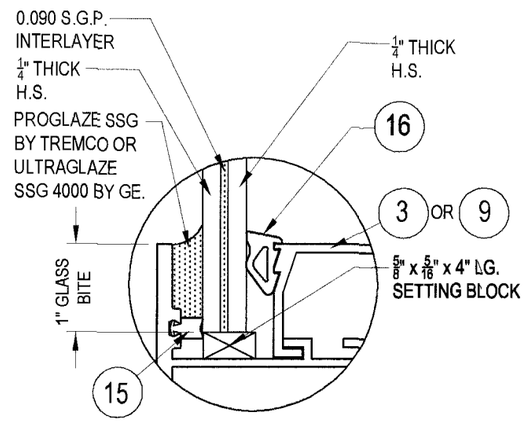

GLAZING DETAIL FOR 9/16" LAMI GLASS (GL-1)

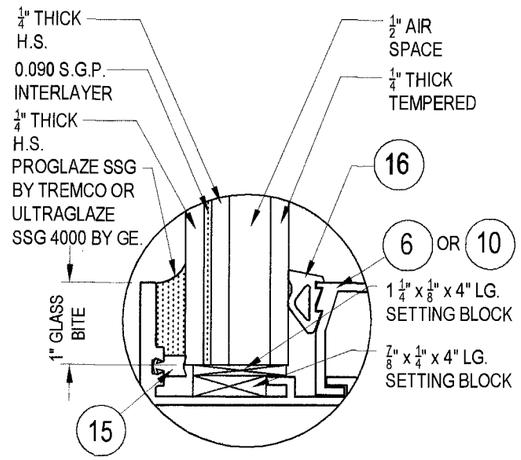

GLAZING DETAIL FOR 1 5/16" INSU-LAMI GLASS (GL-2)

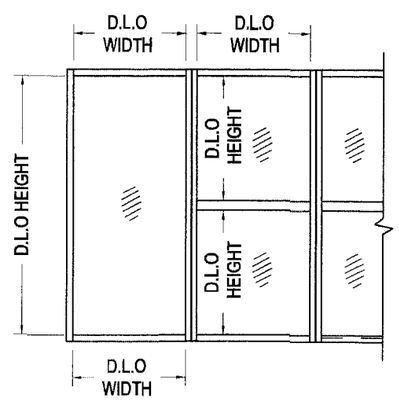

NOMINAL DIMENSIONS (INCHES)		ALLOWABLE GLASS LOAD CAPACITY (p.s.f.)
D.L.O WIDTH	D.L.O HEIGHT	GL-3 & GL-4
34	38	±130.0
42		±130.0
50		±130.0
58		±130.0
68		±130.0
42	46	±130.0
46		±130.0
50		±130.0
54		±130.0
56		±130.0
36	50	±130.0
40		±130.0
44		±130.0
48		±130.0
52		±130.0
32	54	±130.0
63		±130.0
40		±130.0
44		±130.0
48		±130.0
28	58	±130.0
32		±130.0
36		±130.0
40		±130.0
45		±130.0
26	60	±130.0
30		±130.0
34		±130.0
38		±130.0
44		±130.0

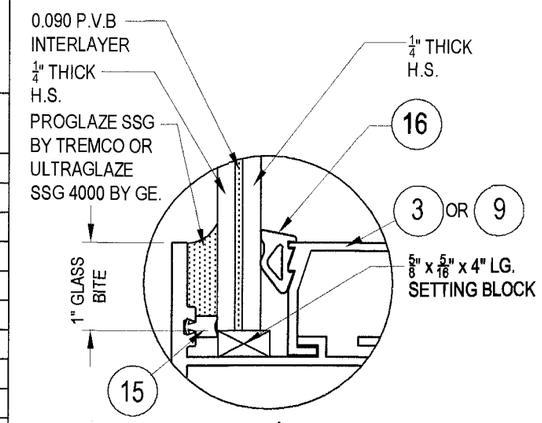

GLAZING DETAIL FOR 9/16" LAMI GLASS (GL-3)

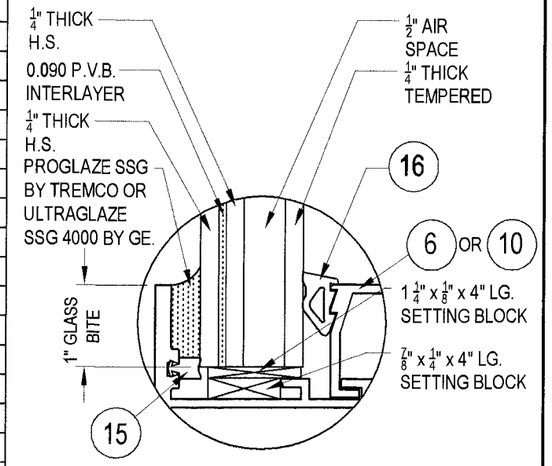

GLAZING DETAIL FOR 1 5/16" INSU-LAMI GLASS (GL-4)

Approved as complying with the Florida Building Code
Date AUG. 5, 2009
NOAS 09-0520.11
Miami-Dade Product Control Division
By Manuel Perez

Jorge E. Valdes
Fla. PE# 67398
C.A.N. 28565

MAY 19 2009

Miami Wall Systems, Inc.
701 West 25th Street
Hialeah, Florida. 33010
Phone:(305) 888-2300 Fax:(305) 888-3058

WINDOW WALL SYSTEMS SERIES 6000

GLASS LOAD CHART

NO.	DATE	REVISION

DATE: 5/18/2009
SCALE: AS NOTED
DWG. BY: L.R.A
CHK. BY: JV
DWG NO.: NOA 6000
SHEET 2 OF 12

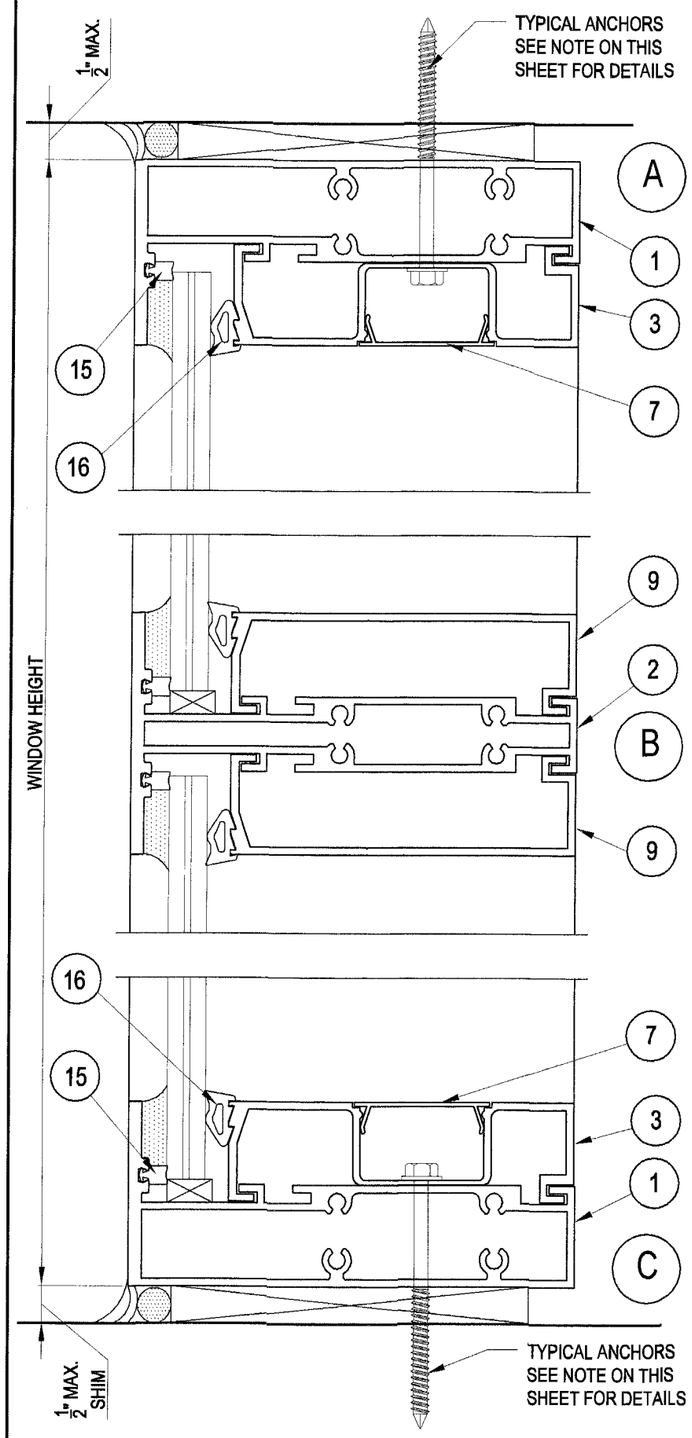

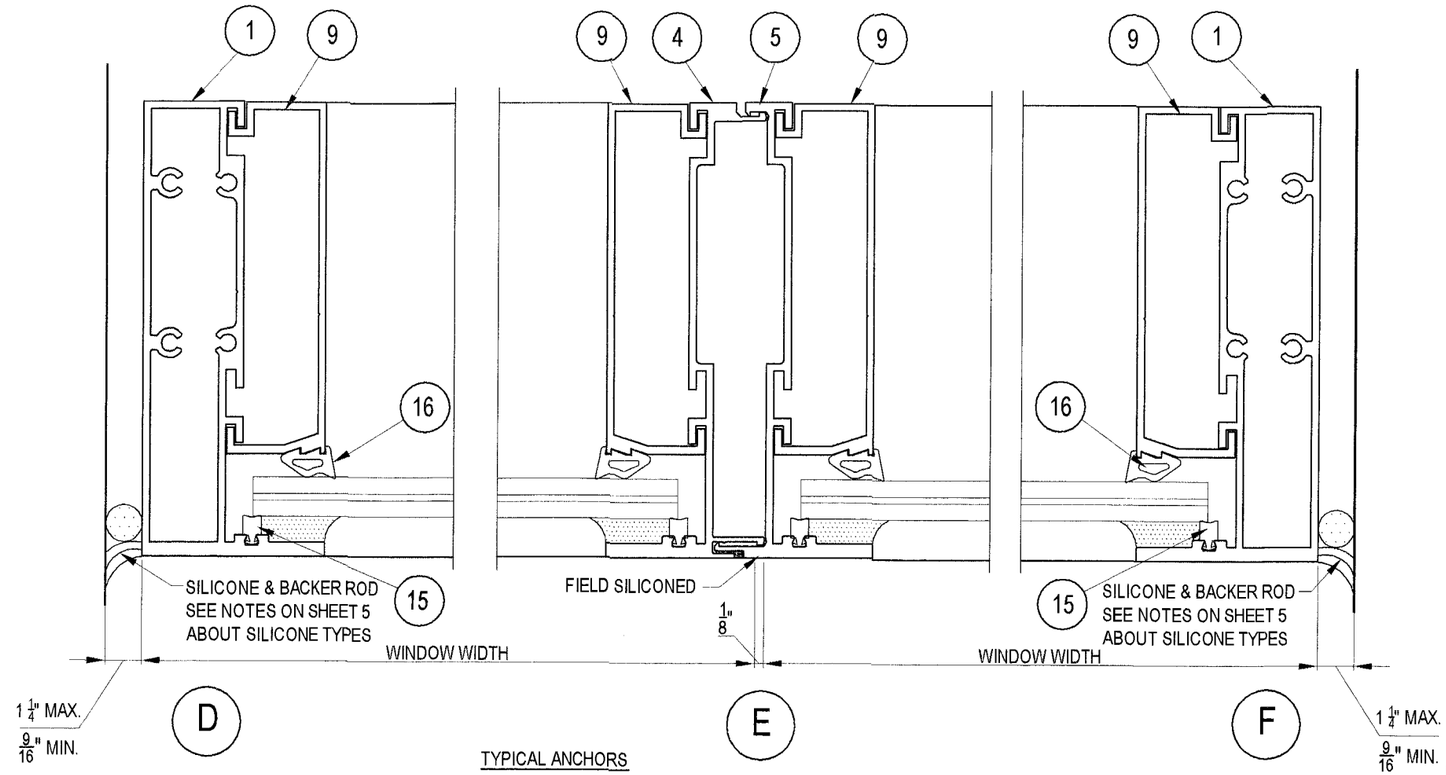

TYPICAL ANCHORS

TYPE 'A' : 1/4" Ø ULTRACON BY ELCO INTO 2700 p.s.i. CONCRETE W/1 3/4" MIN. EMB. & 2 1/2" MIN. EDGE DIST.

TYPE 'B' : 5/16" Ø ULTRACON BY ELCO INTO 3500 p.s.i. CONCRETE W/1 3/4" MIN. EMB. & 2 3/16" MIN. EDGE DIST.

TYPE 'C' : #14-20 KWIK-FLEX BY HILTI OR DRIL FLEX BY ELCO INTO METAL STRUCTURES (BY OTHERS) WITH 1/2" MIN. EDGE DIST.

- STEEL TO BE A36 MIN. WITH 3/16" MIN. THICKNESS.
- ALUMINUM TO BE ALLOY 6063-T5 MIN. WITH 1/4" THICKNESS.

TYPE 'D' : 5/16" -24 KWIK FLEX BY HILTI OR DRIL FLEX BY ELCO INTO METAL STRUCTURES (BY OTHERS) WITH 5/8" MIN. EDGE DIST.

- STEEL TO BE A36 MIN. WITH 3/16" MIN. THICKNESS.
- ALUMINUM TO BE ALLOY 6063-T5 MIN. WITH 1/4" THICKNESS.

TYPE 'E' : 3/8" KWIK BOLT 3 INTO 4000 p.s.i. CONCRETE W/ 2 1/2" MIN EMB. 3" O.C. SPACING AND 3 1/2" MIN. EDGE DIST.

TYPICAL DETAILS UP TO 125" HIGH

Approved as complying with the Florida Building Code
Date AUG. 5, 2009
NOAA 09-0520.11
Miami-Dade Product Control
By

Jorge E. Valdes
Fla. PE# 67398
C.A.N. 28565

MAY 19 2009

Miami Wall Systems, Inc.
701 West 25th Street
Hialeah, Florida. 33010
Phone:(305) 888-2300 Fax:(305) 888-3058

WINDOW WALL SYSTEMS SERIES 6000

SECTIONS

REVISION	DATE	NO.

DATE: 5/18/2009
SCALE: AS NOTED
DWG. BY: L.R.A
CHK. BY: JV
DWG NO.: NOA 6000
SHEET 3 OF 12

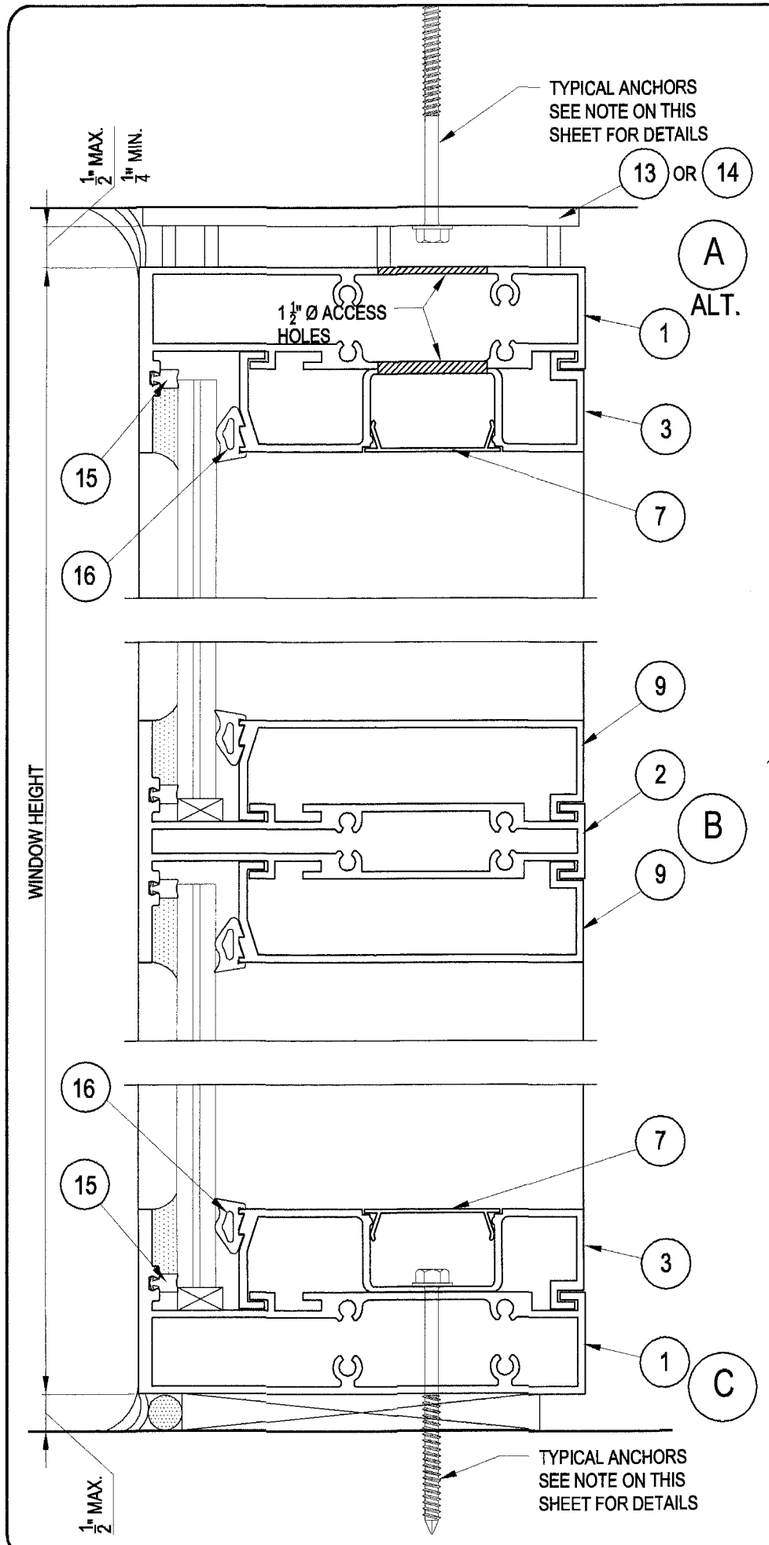

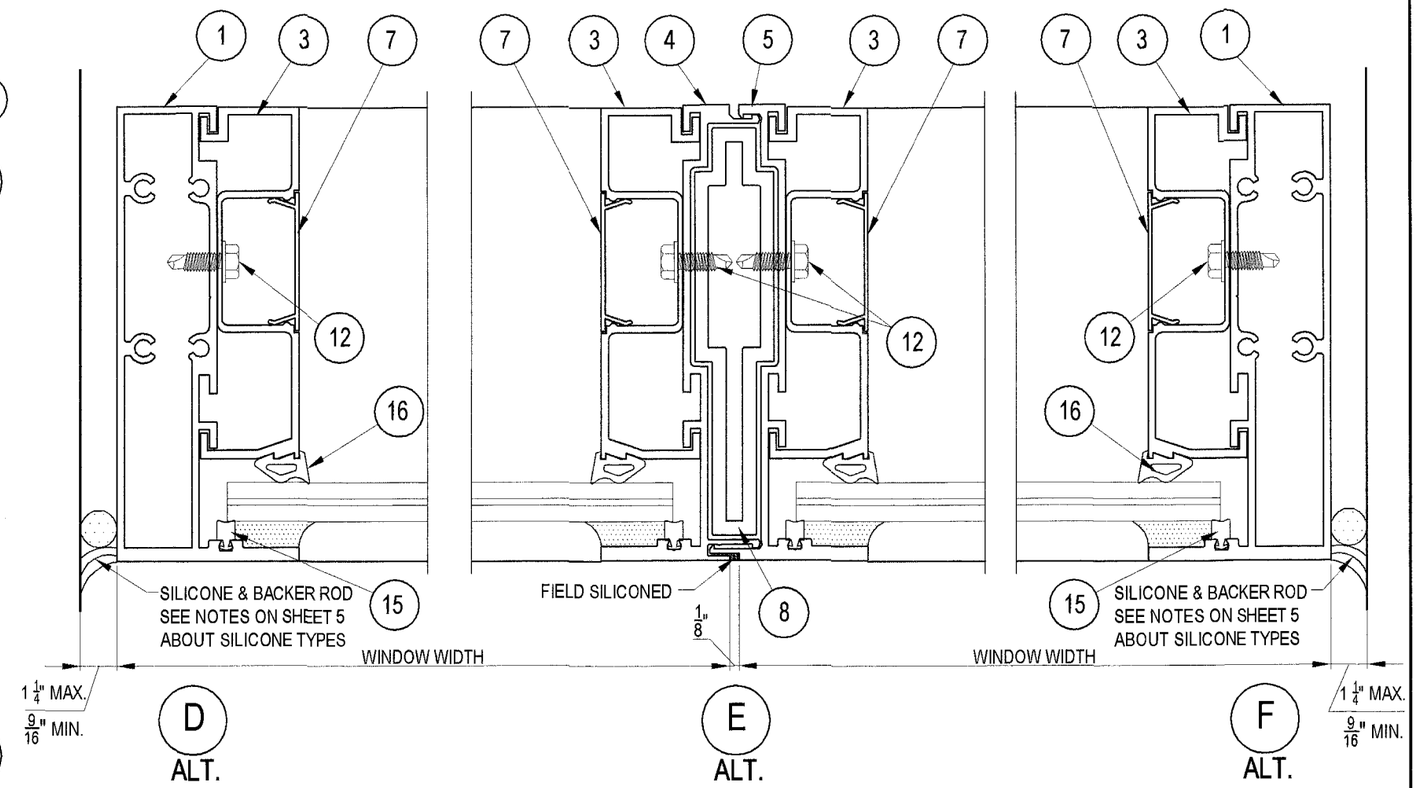

TYPICAL ANCHORS

TYPE 'B' : 5/16" Ø ULTRACON BY ELCO INTO 3500 p.s.i. CONCRETE W /1 3/4" MIN. EMB. & 2 3/16" MIN. EDGE DIST

TYPE 'D' : 5/16" -24 KWIK FLEX BY HILTI OR DRIL FLEX BY ELCO INTO METAL STRUCTURES (BY OTHERS) WITH 5/8" MIN. EDGE DIST.

- STEEL TO BE A36 MIN. WITH 3/16" MIN. THICKNESS.
- ALUMINUM TO BE ALLOY 6063-T5 MIN. WITH 1/4" THICKNESS.

TYPE 'E' : 3/8" KWIK BOLT 3 INTO 4000 p.s.i. CONCRETE W/ 2 1/2" MIN EMB. 3" O.C. SPACING AND 3 1/2" MIN. EDGE DIST.

TYPICAL DETAILS UP TO 168" HIGH

Approved as complying with the Florida Building Code
Date AUG. 5, 2009
NOA# 09-0520.11
Miami-Dade Product Control
By: Manuel Perez

Jorge E. Valdes
Fla. PE# 67398
C.A.N. 28565

MAY 19 2009

Miami Wall Systems, Inc.
701 West 25th Street
Hialeah, Florida. 33010
Phone:(305) 888-2300 Fax:(305) 888-3058

WINDOW WALL SYSTEMS SERIES 6000

SECTIONS

REVISION		
NO.	DATE	

DATE: 5/18/2009
SCALE: AS NOTED
DWG. BY: L.R.A
CHK. BY: JV
DWG NO.: NOA 6000
SHEET 4 OF 12

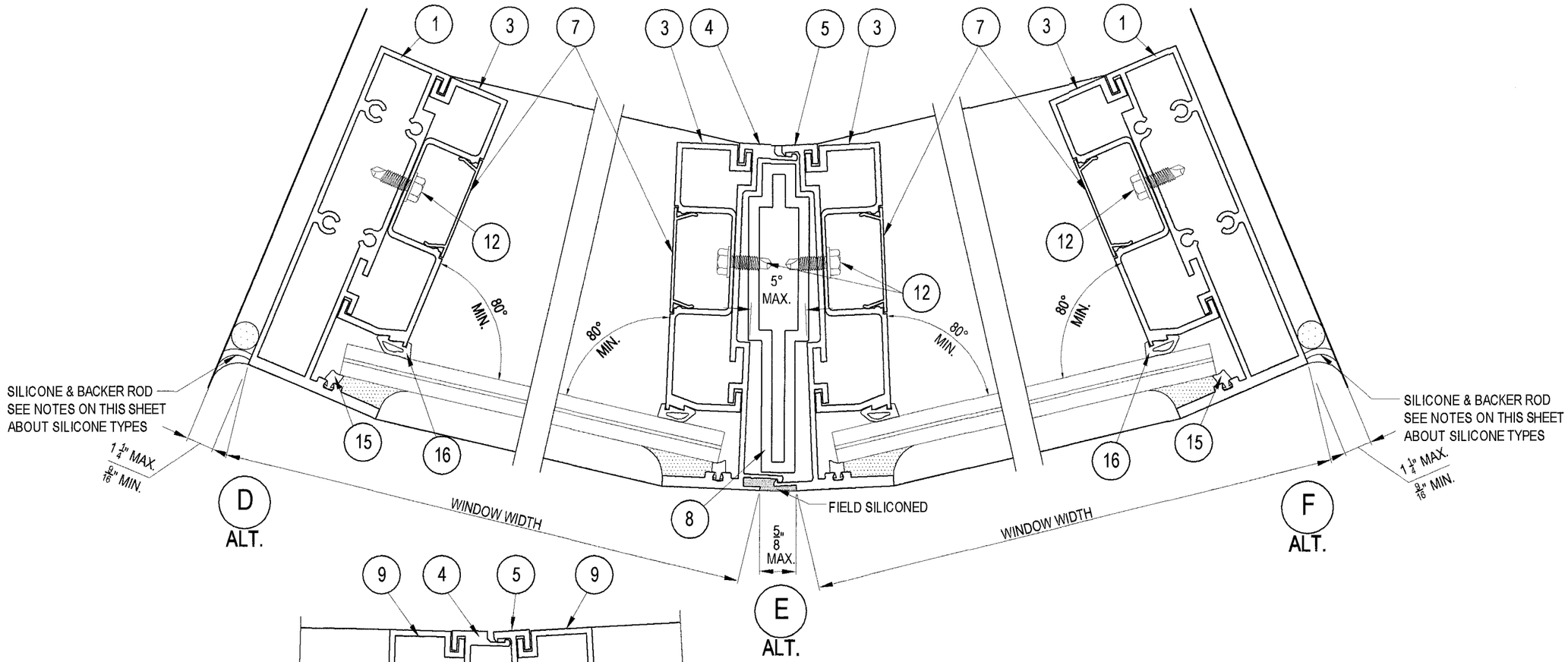

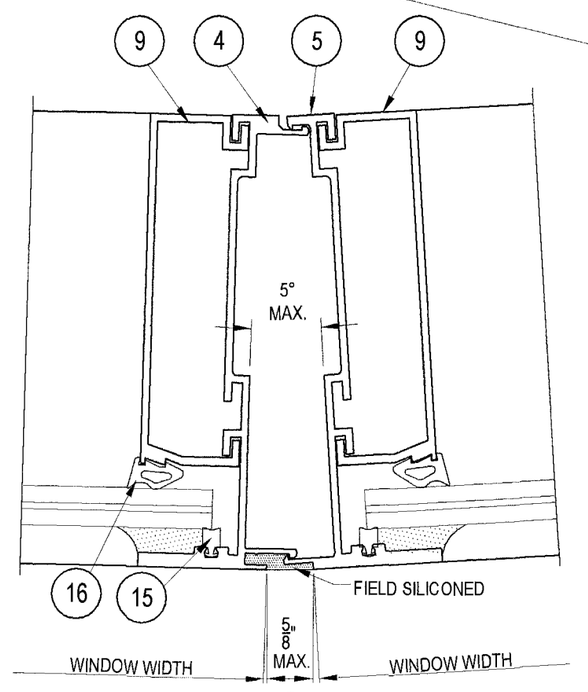

ALT. UP TO 125" HIGH

NOTES:

1. HEAD, SILL AND INTERMEDIATE MEMBERS MITER UP TO 80° MIN.
2. SILICONE TYPES:
   - TREMCO SPECTREM I
   - DOW CORNING 790.
3. SILICONE DEPTH SHOULD NOT EXCEED 1/2".
   CONSULT WITH SEALANT MANUFACTURER FOR APLICATION DETAILS.

Approved as complying with the Florida Building Code
Date: AUG. 5, 2009
NOA# 09-0520.11
Miami-Dade Product Control
Examiner
By: Manuel Perez

Jorge E. Valdes
Fla. PE# 67398
C.A.N. 28565

MAY 19 2009

Miami Wall Systems, Inc.
701 West 25th Street
Hialeah, Florida. 33010
Phone:(305) 888-2300 Fax:(305) 888-3058

WINDOW WALL SYSTEMS SERIES 6000

SECTIONS

NO.	DATE	REVISION

DATE: 5/18/2009
SCALE: AS NOTED
DWG. BY: L.R.A
CHK. BY: JV
DWG NO.: NOA 6000
SHEET 5 OF 12

NOMINAL DIMENSIONS (INCHES)		ALLOWABLE JAMB DESIGN PRESSURES POSITIVE/NEGATIVE
WIDTH (W*)	FRAME HEIGHT (H)	(JAMB ' J1 ')
42	96	130.0 p.s.f.
50		130.0 p.s.f.
58		130.0 p.s.f.
66		130.0 p.s.f.
74		130.0 p.s.f.
82		130.0 p.s.f.
36	104	130.0 p.s.f.
44		130.0 p.s.f.
52		130.0 p.s.f.
60		130.0 p.s.f.
68		130.0 p.s.f.
76		130.0 p.s.f.
38	112	130.0 p.s.f.
42		130.0 p.s.f.
50		130.0 p.s.f.
54		130.0 p.s.f.
62		130.0 p.s.f.
70		130.0 p.s.f.
48	116	130.0 p.s.f.
52		130.0 p.s.f.
56		130.0 p.s.f.
60		130.0 p.s.f.
64		130.0 p.s.f.
68		130.0 p.s.f.
34	120	130.0 p.s.f.
38		130.0 p.s.f.
42		130.0 p.s.f.
46		130.0 p.s.f.
50		130.0 p.s.f.
66		130.0 p.s.f.
44	125	130.0 p.s.f.
48		130.0 p.s.f.
52		130.0 p.s.f.
56		130.0 p.s.f.
60		130.0 p.s.f.
64		130.0 p.s.f.

NOMINAL DIMENSIONS (INCHES)		ALLOWABLE JAMB DESIGN PRESSURES POSITIVE/NEGATIVE	
WIDTH (W*)	FRAME HEIGHT (H)	(JAMB ' J2 ')	(JAMB ' J3 ')
72	128	90.0 p.s.f.	90.0 p.s.f.
76		90.0 p.s.f.	90.0 p.s.f.
80		90.0 p.s.f.	90.0 p.s.f.
84		90.0 p.s.f.	90.0 p.s.f.
72	132	90.0 p.s.f.	90.0 p.s.f.
76		90.0 p.s.f.	90.0 p.s.f.
80		88.86 p.s.f.	90.0 p.s.f.
84		84.62 p.s.f.	90.0 p.s.f.
72	136	90.0 p.s.f.	90.0 p.s.f.
76		85.52 p.s.f.	90.0 p.s.f.
80		81.24 p.s.f.	90.0 p.s.f.
84		77.37 p.s.f.	90.0 p.s.f.
68	140	87.62 p.s.f.	90.0 p.s.f.
72		82.75 p.s.f.	90.0 p.s.f.
76		78.40 p.s.f.	90.0 p.s.f.
80		74.48 p.s.f.	90.0 p.s.f.
84		70.93 p.s.f.	90.0 p.s.f.
64	144	85.55 p.s.f.	90.0 p.s.f.
68		80.52 p.s.f.	90.0 p.s.f.
72		76.05 p.s.f.	90.0 p.s.f.
76		72.04 p.s.f.	90.0 p.s.f.
80		68.44 p.s.f.	90.0 p.s.f.
84		65.18 p.s.f.	90.0 p.s.f.
32	152	90.0 p.s.f.	90.0 p.s.f.
36		90.0 p.s.f.	90.0 p.s.f.
40		90.0 p.s.f.	90.0 p.s.f.
44		90.0 p.s.f.	90.0 p.s.f.
32	160	90.0 p.s.f.	90.0 p.s.f.
36		90.0 p.s.f.	90.0 p.s.f.
40		90.0 p.s.f.	90.0 p.s.f.
42		90.0 p.s.f.	90.0 p.s.f.
32	164	90.0 p.s.f.	90.0 p.s.f.
36		90.0 p.s.f.	90.0 p.s.f.
40		90.0 p.s.f.	90.0 p.s.f.
32	168	90.0 p.s.f.	90.0 p.s.f.
36		90.0 p.s.f.	90.0 p.s.f.
40		86.2 p.s.f.	90.0 p.s.f.

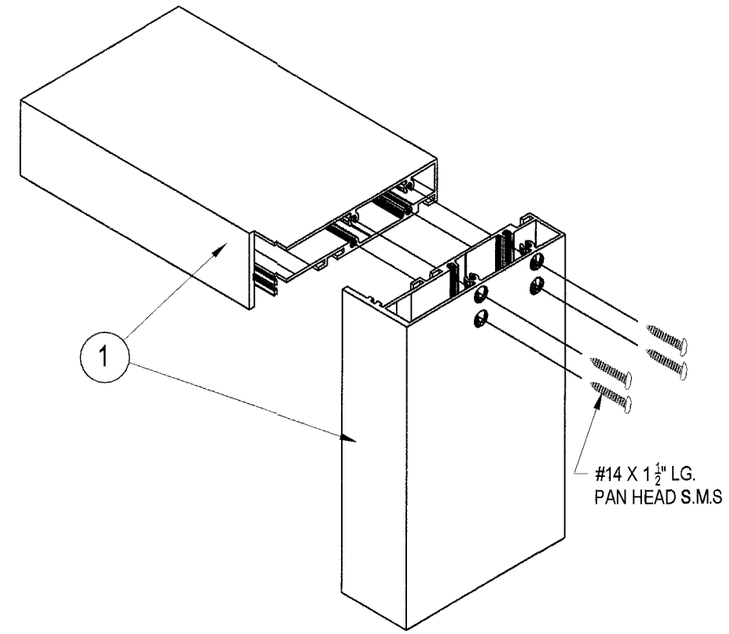

FRAME ASSEMBLY DETAIL AT HEAD/SILL & JAMBS

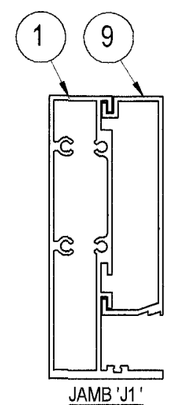

JAMB 'J1'
Ix = 12.954 in^4
Sx = 4.152 in^3

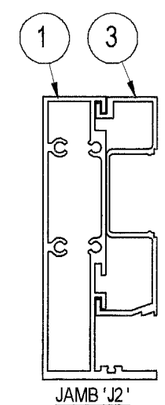

JAMB 'J2'
Ix = 13.305 in^4
Sx = 4.334 in^3

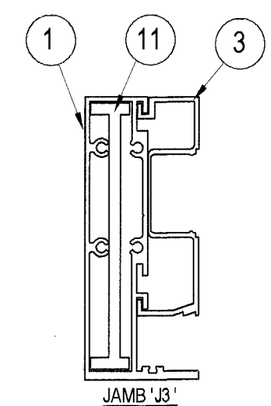

JAMB 'J3'
Ix = 19.950 in^4
Sx = 6.381 in^3

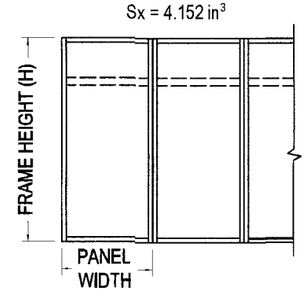

WIDTH (W*) = PANEL WIDTH

Approved as complying with the Florida Building Code
Date AUG. 5, 2009
NOA 09-0520.11
Miami-Dade Product Control
By

Jorge E. Valdes
Fla. PE# 67398
C.A.N. 28565

MAY 19 2009

Miami Wall Systems, Inc.
701 West 25th Street
Hialeah, Florida, 33010
Phone:(305) 888-2300 Fax:(305) 888-3058

WINDOW WALL SYSTEMS SERIES 6000

JAMB LOAD CHART

NO.	DATE	REVISION

DATE: 5/18/2009
SCALE: AS NOTED
DWG. BY: L.R.A
CHK. BY: JV
DWG NO.: NOA 6000
SHEET 6 OF 12

NOMINAL DIMENSIONS (INCHES)		ALLOWABLE MULLION DESIGN PRESSURES (p.s.f.). POSITIVE/NEGATIVE	
WIDTH (W*)	FRAME HEIGHT (H)	MULLION ('M1')	MULLION ('M2')
42	96	130.0	130.0
50		130.0	130.0
58		130.0	130.0
66		130.0	130.0
74		130.0	130.0
82		130.0	130.0
40	100	130.0	130.0
48		130.0	130.0
56		130.0	130.0
64		130.0	130.0
72		130.0	130.0
80		130.0	130.0
36	104	130.0	130.0
44		130.0	130.0
52		130.0	130.0
60		130.0	130.0
68		130.0	130.0
76		130.0	130.0
30	112	130.0	130.0
38		130.0	130.0
46		130.0	130.0
54		130.0	130.0
62		130.0	130.0
70		130.0	130.0
28	116	130.0	130.0
36		130.0	130.0
44		130.0	130.0
52		130.0	130.0
60		130.0	130.0
68		124.81	130.0
34	120	130.0	130.0
42		130.0	130.0
50		130.0	130.0
58		126.15	130.0
62		119.68	130.0
66		114.13	130.0
36	125	130.0	130.0
44		130.0	130.0
52		121.38	130.0
56		114.01	130.0
60		107.74	130.0
64		102.37	130.0

NOMINAL DIMENSIONS (INCHES)		ALLOWABLE MULLION DESIGN PRESSURES (p.s.f.) POSITIVE/NEGATIVE
WIDTH (W*)	FRAME HEIGHT (H)	MULLION ('M3')
26	128	90.0
34		90.0
42		90.0
50		90.0
58		90.0
66		90.0
24	136	90.0
32		90.0
40		90.0
48		90.0
56		90.0
62		90.0
28	144	90.0
36		90.0
44		90.0
52		90.0
56		90.0
60		87.59
24	152	90.0
28		90.0
32		90.0
36		90.0
40		90.0
44		90.0
24	160	90.0
28		90.0
32		90.0
36		90.0
40		90.0
42		90.0
24	164	90.0
28		90.0
32		90.0
36		90.0
40		88.94
24	168	90.0
28		90.0
32		90.0
36		90.0
40		82.73

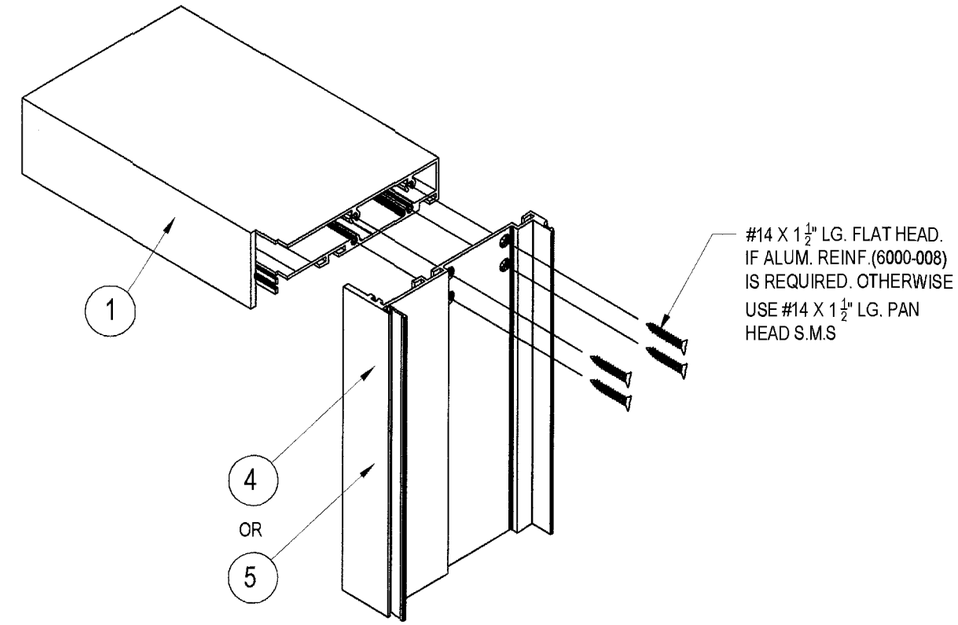

FRAME ASSEMBLY DETAIL AT HEAD/SILL & MALE/FEMALE

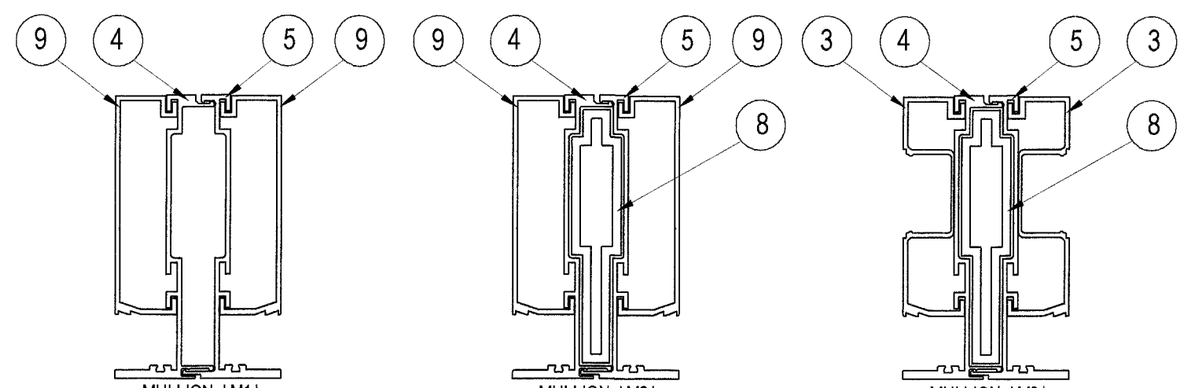

MULLION 'M1'
Ix = 18.700 in^4
Sx = 5.955 in^3

MULLION 'M2'
Ix = 24.870 in
Sx = 8.049 in

MULLION 'M3'
Ix = 25.540 in^4
Sx = 8.265 in^3

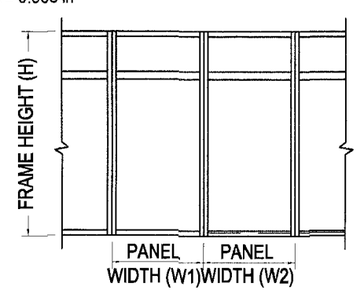

$$\text{WIDTH } (W^*) = \frac{\text{PANEL WIDTH (W1)} + \text{PANEL WIDTH (W2)}}{2}$$

Approved as complying with the Florida Building Code
Date AUG. 5, 2009
NOA# 09-0520.11
Miami-Dade Product Control Division
By Manuel Perez

Jorge E. Valdes
Fla. PE# 67398
C.A.N. 28565

MAY 19 2009

Miami Wall Systems, Inc.
701 West 25th Street
Hialeah, Florida. 33010
Phone:(305) 888-2300 Fax:(305) 888-3058

WINDOW WALL SYSTEMS SERIES 6000

MULLION LOAD CHART

NO.	DATE	REVISION

DATE: 5/18/2009
SCALE: AS NOTED
DWG. BY: L.R.A
CHK. BY: JV
DWG NO.: NOA 6000
SHEET 7 OF 12

NOMINAL DIMENSIONS (INCHES)		ALLOWABLE DESIGN PRESSURES FOR CLUSTER OF FASTENERS AT JAMB ENDS (p.s.f.) POSITIVE/NEGATIVE								
		¼" MAX. SHIMMING SPACE						½" MAX. SHIMMING SPACE		
WIDTH (W)	FRAME HEIGHT (H)	TYPE A2	TYPE B2	TYPE C2	TYPE A3	TYPE B3	TYPE C3	TYPE D2	TYPE E2	TYPE D3
32	84	130	130	119.6	130	130	130	130	130	130
40		130	130	101.7	130	130	130	130	130	130
48		130	130	90.4	130	130	130	130	130	130
56		130	130	83.0	130	130	124.5	130	130	130
64		123.2	130	78.2	130	130	117.3	130	130	130
32	92	130	130	107.1	130	130	130	130	130	130
40		130	130	90.4	130	130	130	130	130	130
48		125.6	130	79.8	130	130	119.6	130	130	130
56		114.4	130	72.6	130	130	109.0	130	130	130
64		106.8	130	67.8	130	130	101.7	130	130	130
32	100	130.0	130	96.9	130	130	130	130	130	130
40		128.2	130	81.4	130	130	122.0	130	130	130
48		112.4	130	71.4	130	130	107.1	130	130	130
56		101.7	130	64.6	130	130	96.9	130	130	130
64		94.2	130	59.8	130	130	89.7	128.4	130	130
32	108	130	130	88.4	130	130	130	130	130	130
40		116.5	130	74.0	130	130	110.9	130	130	130
48		101.7	130	64.6	130	130	96.9	130	130	130
56		91.5	130	58.1	130	130	87.2	124.7	130	130
64		84.3	130	53.5	126.5	130	80.3	114.9	130	130
32	116	128.2	130	81.4	130	130	122.0	130	130	130
40		106.8	130	67.8	130	130	101.7	130	130	130
48		92.9	130	59.0	130	130	88.4	126.5	130	130
56		83.2	130	52.8	124.8	130	79.2	113.4	130	130
64		76.3	130	48.4	114.4	130	72.6	103.9	130	130
32	125	117.6	130	74.6	130	130	112.0	130	130	130
40		97.6	130	62.0	130	130	93.0	130	130	130
48		84.6	130	53.7	126.9	130	80.6	115.2	130	130
56		75.5	130	47.9	113.2	130	71.9	102.9	130	130
64		68.9	121.4	43.7	103.4	130	65.6	93.9	130	130

PANEL WIDTH (INCHES)	MAX. SPACING FOR BALANCE OF ANCHORS TYP. @ HEAD & SILL			
	¼" MAX. SHIMMING SPACE			½" MAX. SHIMMING SPACE
	TYPE 'A'	TYPE 'B'	TYPE 'C'	TYPE 'D'
30	16 1/2"	16 1/2"	16 1/2"	16 1/2"
36	16 1/2"	16 1/2"	13 7/8"	16 1/2"
42	16 1/2"	16 1/2"	11 15/16"	16 1/2"
48	16 1/2"	16 1/2"	10 7/16"	16 1/2"
54	14 5/8"	16 1/2"	9 1/4"	16 1/2"
60	13 1/8"	16 1/2"	8 5/16"	16 1/2"
66	11 15/16"	16 1/2"	7 9/16"	16 1/4"
72	10 15/16	16 1/2"	6 15/16"	14 15/16
78	10 1/8"	16 1/2"	6 7/16"	13 3/4"
84	9 3/8"	16 1/2"	5 15/16"	12 13/16"

FASTENER SPACING
SEE CHART ON THIS SHEET

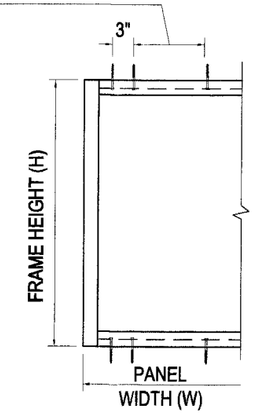

A2, B2, C2, D2 & E2

FASTENER SPACING
SEE CHART ON THIS SHEET

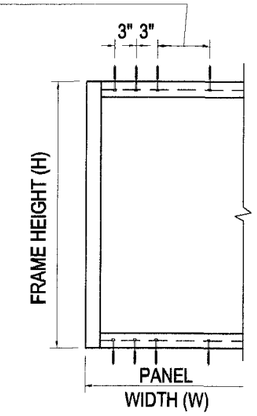

A3, B3, C3 & D3

ANCHORS AT JAMB ENDS

ANCHOR TYPES: SEE SHEET 3 & 4 FOR DESCRIPTION. BALANCE OF ANCHORS SPACED AS DEPICTED IN CHART ON THIS SHEET.

A2 = (2) ANCHORS TYPE 'A' AT JAMB ENDS
A3 = (3) ANCHORS TYPE 'A' AT JAMB ENDS

B2 = (2) ANCHORS TYPE 'B' AT JAMB ENDS
B3 = (3) ANCHORS TYPE 'B' AT JAMB ENDS

C2 = (2) ANCHORS TYPE 'C' AT JAMB ENDS
C3 = (3) ANCHORS TYPE 'C' AT JAMB ENDS

D2 = (2) ANCHORS TYPE 'D' AT JAMB ENDS
D3 = (3) ANCHORS TYPE 'D' AT JAMB ENDS

E2 = (2) ANCHORS TYPE 'E' AT JAMB ENDS

Approved as complying with the Florida Building Code
Date AUG. 5, 2009
NOA# 09-0520.11
Miami-Dade Product Control Division
By Manuel Perez

Jorge E. Valdes
Fla. PE# 67398
C.A.N. 28565

MAY 19 2009

Miami Wall Systems, Inc.
701 West 25th Street
Hialeah, Florida. 33010
Phone:(305) 888-2300 Fax:(305) 888-3058

WINDOW WALL SYSTEMS SERIES 6000

ANCHORAGE AT JAMB ENDS FOR FRAME HEIGHT UP TO 125"

NO.	DATE	REVISION

DATE: 5/18/2009
SCALE: AS NOTED
DWG. BY: L.R.A
CHK. BY: JV
DWG NO.: NOA 6000
SHEET 8 OF 12

NOMINAL DIMENSIONS (INCHES)		ALLOWABLE DESIGN PRESSURES FOR CLUSTER OF FASTENERS AT MULLIONS (p.s.f.). POSITIVE/NEGATIVE								
		¼" MAX. SHIMMING SPACE						½" MAX. SHIMMING SPACE		
WIDTH (W*)	FRAME HEIGHT (H)	TYPE A4	TYPE B4	TYPE C4	TYPE A6	TYPE B6	TYPE C6	TYPE D4	TYPE E4	TYPE D6
30	84	130.0	130.0	125.8	130.0	130.0	130.0	130.0	130.0	130.0
36		130.0	130.0	109.6	130.0	130.0	130.0	130.0	130.0	130.0
42		130.0	130.0	98.4	130.0	130.0	130.0	130.0	130.0	130.0
48		130.0	130.0	90.4	130.0	130.0	130.0	130.0	130.0	130.0
54		130.0	130.0	84.6	130.0	130.0	126.9	130.0	130.0	130.0
60		126.6	130.0	80.4	130.0	130.0	120.5	130.0	130.0	130.0
64		123.2	130.0	78.2	130.0	130.0	117.3	130.0	130.0	130.0
30	92	130.0	130.0	112.7	130.0	130.0	130.0	130.0	130.0	130.0
36		130.0	130.0	97.7	130.0	130.0	130.0	130.0	130.0	130.0
42		130.0	130.0	87.3	130.0	130.0	130.0	130.0	130.0	130.0
48		125.6	130.0	79.8	130.0	130.0	119.6	130.0	130.0	130.0
54		116.8	130.0	74.2	130.0	130.0	111.3	130.0	130.0	130.0
60		110.2	130.0	70.0	130.0	130.0	105.0	130.0	130.0	130.0
64		106.8	130.0	67.8	130.0	130.0	101.7	130.0	130.0	130.0
30	100	130.0	130.0	102.1	130.0	130.0	130.0	130.0	130.0	130.0
36		130.0	130.0	88.2	130.0	130.0	130.0	130.0	130.0	130.0
42		123.6	130.0	78.5	130.0	130.0	117.7	130.0	130.0	130.0
48		112.4	130.0	71.4	130.0	130.0	107.1	130.0	130.0	130.0
54		104.0	130.0	66.0	130.0	130.0	99.1	130.0	130.0	130.0
60		97.6	130.0	62.0	130.0	130.0	93.0	130.0	130.0	130.0
64		94.2	130.0	59.8	130.0	130.0	89.7	128.4	130.0	130.0
30	108	130.0	130.0	93.3	130.0	130.0	130.0	130.0	130.0	130.0
36		126.6	130.0	80.4	130.0	130.0	120.5	130.0	130.0	130.0
42		112.2	130.0	71.3	130.0	130.0	106.9	130.0	130.0	130.0
48		101.7	130.0	64.6	130.0	130.0	96.9	130.0	130.0	130.0
54		93.8	130.0	59.5	130.0	130.0	89.3	127.7	130.0	130.0
60		87.6	130.0	55.6	130.0	130.0	83.4	119.4	130.0	130.0
64		84.3	130.0	53.5	126.5	130.0	80.3	114.9	130.0	130.0
30	116	130.0	130.0	85.9	130.0	130.0	128.9	130.0	130.0	130.0
36		116.2	130.0	73.8	130.0	130.0	110.7	130.0	130.0	130.0
42		102.8	130.0	65.3	130.0	130.0	97.9	130.0	130.0	130.0
48		92.9	130.0	59.0	130.0	130.0	88.4	126.5	130.0	130.0
54		85.3	130.0	54.2	128.0	130.0	81.3	116.3	130.0	130.0
60		79.5	130.0	50.5	119.2	130.0	75.7	108.3	130.0	130.0
64		76.3	130.0	48.4	114.4	130.0	72.6	103.9	130.0	130.0
30	125	124.3	130.0	78.9	130.0	130.0	118.3	130.0	130.0	130.0
36		106.5	130.0	67.6	130.0	130.0	101.4	130.0	130.0	130.0
42		93.9	130.0	59.6	130.0	130.0	89.4	127.9	130.0	130.0
48		84.6	130.0	53.7	126.9	130.0	80.6	115.2	130.0	130.0
54		77.5	130.0	49.2	116.2	130.0	73.8	105.6	130.0	130.0
60		71.9	126.7	45.7	107.9	130.0	68.5	98.0	130.0	130.0
64		68.9	121.4	43.7	103.4	130.0	65.6	93.9	130.0	130.0

ANCHOR TYPES: SEE SHEET 3 &4 FOR DESCRIPTION. BALANCE OF ANCHORS SPACED AS DEPICTED IN CHART ON SHEET 8.

A4 = (2) ANCHORS TYPE 'A' AT EACH SIDE OF MULLION
A6 = (3) ANCHORS TYPE 'A' AT EACH SIDE OF MULLION

B4 = (2) ANCHORS TYPE 'B' AT EACH SIDE OF MULLION
B6 = (3) ANCHORS TYPE 'B' AT EACH SIDE OF MULLION

C4 = (2) ANCHORS TYPE 'C' AT EACH SIDE OF MULLION
C6 = (3) ANCHORS TYPE 'C' AT EACH SIDE OF MULLION

D4 = (2) ANCHORS TYPE 'D' AT EACH SIDE OF MULLION
D6 = (3) ANCHORS TYPE 'D' AT EACH SIDE OF MULLION

E4 = (2) ANCHORS TYPE 'E' AT EACH SIDE OF MULLION

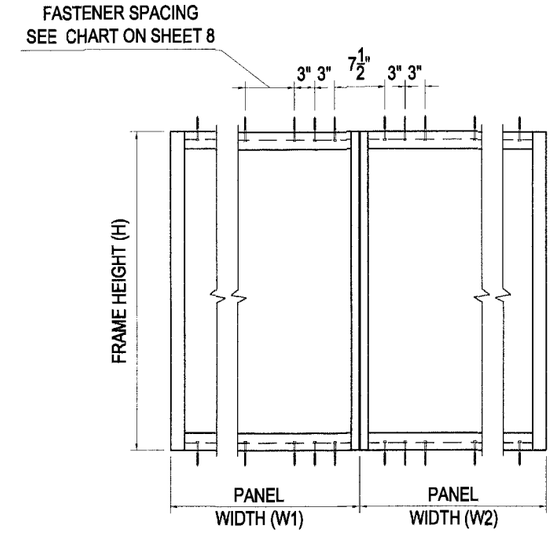

A6, B6, C6 & D6

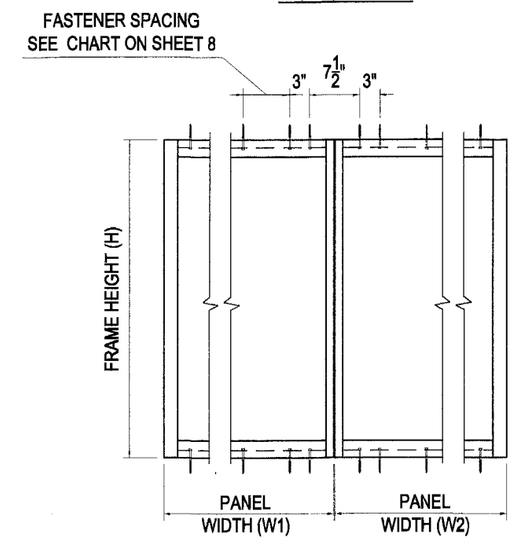

A4, B4, C4, D4 & E4

$$\text{WIDTH } (W^*) = \frac{\text{PANEL WIDTH (W1)} + \text{PANEL WIDTH (W2)}}{2}$$

Approved as complying with the Florida Building Code
Date AUG. 5, 2009
NOA# 09-0520.11
Miami-Dade Product Control Division
By Manuel Perez

Jorge E. Valdes
Fla. PE# 67398
C.A.N. 28565

MAY 19 2009

Miami Wall Systems, Inc.
701 West 25th Street
Hialeah, Florida. 33010
Phone:(305) 888-2300 Fax:(305) 888-3058

WINDOW WALL SYSTEMS SERIES 6000

ANCHORAGE AT MULLION ENDS FOR FRAME HEIGHT UP TO 125"

NO.	DATE	REVISION

DATE: 5/18/2009
SCALE: AS NOTED
DWG. BY: L.R.A
CHK. BY: JV
DWG NO.: NOA 6000
SHEET 9 OF 12

NOMINAL DIMENSIONS (INCHES)		ALLOWABLE DESIGN PRESSURES FOR CLUSTER OF FASTENERS AT JAMB ENDS (p.s.f.). POSITIVE/NEGATIVE							
		$\frac{1}{4}$" MAX. SHIMMING SPACE			$\frac{1}{2}$" MAX. SHIMMING SPACE				
WIDTH (W)	FRAME HEIGHT (H)	TYPE B2	TYPE B3	TYPE B4	TYPE D2	TYPE E2	TYPE D3	TYPE E3	TYPE D4
48	136	90.0	90.0	90.0	85.6	90.0	90.0	90.0	90.0
52		90.0	90.0	90.0	79.0	90.0	90.0	90.0	90.0
56		90.0	90.0	90.0	73.4	90.0	90.0	90.0	90.0
64		83.0	90.0	90.0	64.2	90.0	90.0	90.0	90.0
72		73.8	90.0	90.0	57.1	90.0	85.6	90.0	90.0
80		66.4	90.0	90.0	51.4	90.0	77.0	90.0	90.0
84		63.2	90.0	90.0	48.9	86.6	73.4	90.0	90.0
48	144	90.0	90.0	90.0	80.8	90.0	90.0	90.0	90.0
52		90.0	90.0	90.0	74.6	90.0	90.0	90.0	90.0
56		89.6	90.0	90.0	69.3	90.0	90.0	90.0	90.0
64		78.4	90.0	90.0	60.6	90.0	90.0	90.0	90.0
72		69.7	90.0	90.0	53.9	90.0	80.8	90.0	90.0
80		62.7	90.0	90.0	48.5	85.9	72.8	90.0	90.0
84		59.7	89.6	90.0	46.2	81.8	69.3	90.0	90.0
28	152	90.0	90.0	90.0	90.0	90.0	90.0	90.0	90.0
32		90.0	90.0	90.0	90.0	90.0	90.0	90.0	90.0
36		90.0	90.0	90.0	90.0	90.0	90.0	90.0	90.0
40		90.0	90.0	90.0	90.0	90.0	90.0	90.0	90.0
44		90.0	90.0	90.0	83.5	90.0	90.0	90.0	90.0
28	160	90.0	90.0	90.0	90.0	90.0	90.0	90.0	90.0
32		90.0	90.0	90.0	90.0	90.0	90.0	90.0	90.0
36		90.0	90.0	90.0	90.0	90.0	90.0	90.0	90.0
40		90.0	90.0	90.0	87.3	90.0	90.0	90.0	90.0
42		90.0	90.0	90.0	83.1	90.0	90.0	90.0	90.0
28	168	90.0	90.0	90.0	90.0	90.0	90.0	90.0	90.0
32		90.0	90.0	90.0	90.0	90.0	90.0	90.0	90.0
36		90.0	90.0	90.0	90.0	90.0	90.0	90.0	90.0
40		90.0	90.0	90.0	83.1	90.0	90.0	90.0	90.0

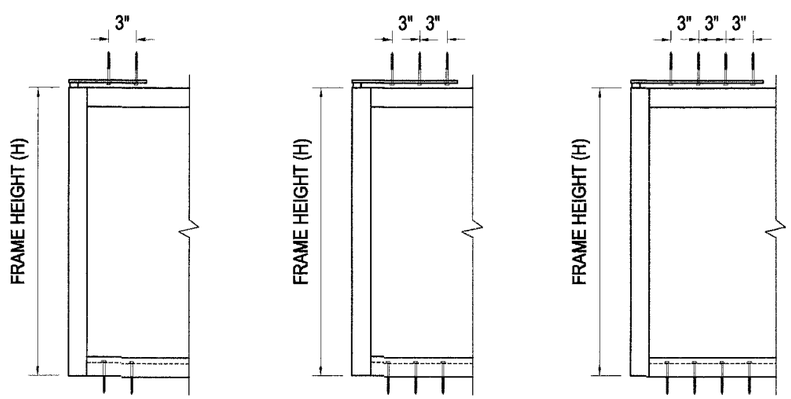

B2, D2 & E2 — B3, D3 & E3 — D4

NOTE: ONLY CLUSTER OF FASTENERS IS REQUIRED AT ENDS OF VERTICAL MEMBERS WITH THIS INSTALLATION OPTION

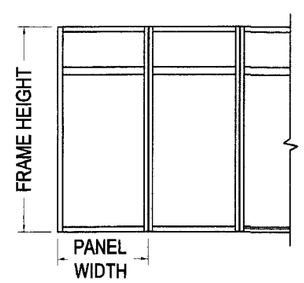

WIDTH (W) = PANEL WIDTH

ANCHOR TYPES: SEE SHEET 3 & 4 FOR DESCRIPTION.

B2 = (2) ANCHORS TYPE 'B' AT JAMB ENDS
B3 = (3) ANCHORS TYPE 'B' AT JAMB ENDS
B4 = (4) ANCHORS TYPE 'B' AT JAMB ENDS

D2 = (2) ANCHORS TYPE 'D' AT JAMB ENDS
D3 = (3) ANCHORS TYPE 'D' AT JAMB ENDS
D4 = (4) ANCHORS TYPE 'D' AT JAMB ENDS

E2 = (2) ANCHORS TYPE 'E' AT JAMB ENDS
E3 = (3) ANCHORS TYPE 'E' AT JAMB ENDS

INTERIOR SIDE

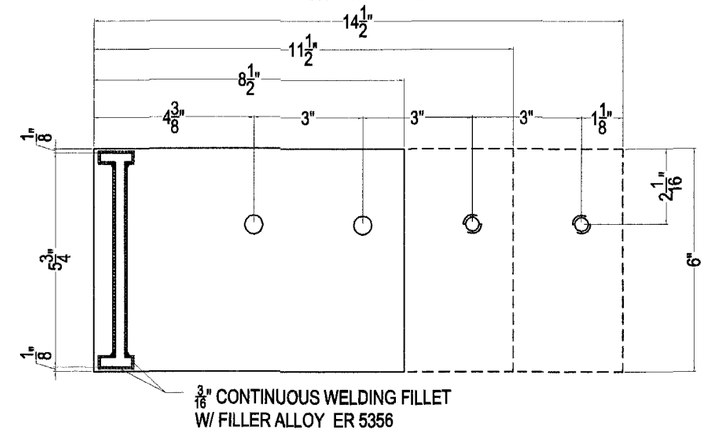

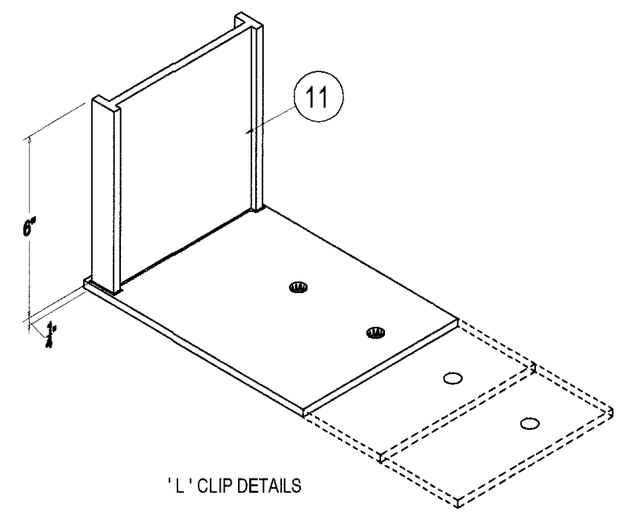

'L' CLIP DETAILS

Approved as complying with the Florida Building Code
Date Aug. 5, 2009
NOA# 09-0520.11
Miami-Dade Product Control Division
By Manuel Perez

Jorge E. Valdes
Fla. PE# 67398
C.A.N. 28565

MAY 19 2009

Miami Wall Systems, Inc.
701 West 25th Street
Hialeah, Florida. 33010
Phone:(305) 888-2300 Fax:(305) 888-3058

WINDOW WALL SYSTEMS SERIES 6000

ANCHORAGE AT JAMB ENDS
FOR FRAME HEIGHT
UP TO 168"

NO.	DATE	REVISION

DATE: 5/18/2009
SCALE: AS NOTED
DWG. BY: L.R.A
CHK. BY: JV
DWG NO.: NOA 6000
SHEET 10 OF 12

NOMINAL DIMENSIONS (INCHES)		ALLOWABLE DESIGN PRESSURES AT MULLIONS (p.s.f.) POSITIVE/NEGATIVE (FRAME HIEGHT LIMITED UP TO 14 FT.)				
		$\frac{1}{4}$" MAX. SHIMMING SPACE		$\frac{1}{2}$" MAX. SHIMMING SPACE		
WIDTH (W*)	FRAME HEIGHT (H)	TYPE B4	TYPE B6	TYPE D4	TYPE E4	TYPE D6
36	128	90.0	90.0	90.0	90.0	90.0
42		90.0	90.0	90.0	90.0	90.0
48		90.0	90.0	90.0	90.0	90.0
54		90.0	90.0	80.8	90.0	90.0
60		90.0	90.0	72.8	90.0	90.0
66		85.5	90.0	66.1	90.0	90.0
32	136	90.0	90.0	90.0	90.0	90.0
38		90.0	90.0	90.0	90.0	90.0
44		90.0	90.0	90.0	90.0	90.0
50		90.0	90.0	82.2	90.0	90.0
56		90.0	90.0	73.4	90.0	90.0
62		85.7	90.0	66.3	90.0	90.0
30	144	90.0	90.0	90.0	90.0	90.0
36		90.0	90.0	90.0	90.0	90.0
42		90.0	90.0	90.0	90.0	90.0
48		90.0	90.0	80.8	90.0	90.0
54		90.0	90.0	71.9	90.0	90.0
60		83.6	90.0	64.7	90.0	90.0
32	152	90.0	90.0	90.0	90.0	90.0
38		90.0	90.0	90.0	90.0	90.0
44		90.0	90.0	83.5	90.0	90.0
30	156	90.0	90.0	90.0	90.0	90.0
36		90.0	90.0	90.0	90.0	90.0
42		90.0	90.0	85.3	90.0	90.0
30	160	90.0	90.0	90.0	90.0	90.0
36		90.0	90.0	90.0	90.0	90.0
42		90.0	90.0	83.1	90.0	90.0
28	168	90.0	90.0	90.0	90.0	90.0
34		90.0	90.0	90.0	90.0	90.0
40		90.0	90.0	83.1	90.0	90.0

ANCHORS TYPES: SEE SHEET 4 FOR DESCRIPTION.

B4 = (2) ANCHORS TYPE 'B' AT EACH SIDE OF MULLION
B6 = (3) ANCHORS TYPE 'B' AT EACH SIDE OF MULLION
D4 = (2) ANCHORS TYPE 'D' AT EACH SIDE OF MULLION
D6 = (3) ANCHORS TYPE 'D' AT EACH SIDE OF MULLION

E4 = (4) ANCHORS TYPE 'E' AT EACH SIDE OF MULLION

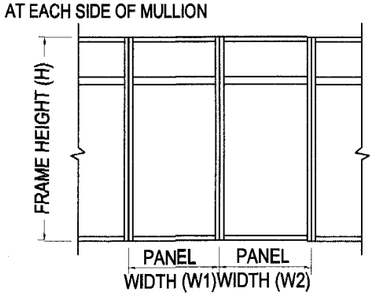

$$\text{WIDTH } (W^*) = \frac{\text{PANEL WIDTH (W1)} + \text{PANEL WIDTH (W2)}}{2}$$

INTERIOR SIDE

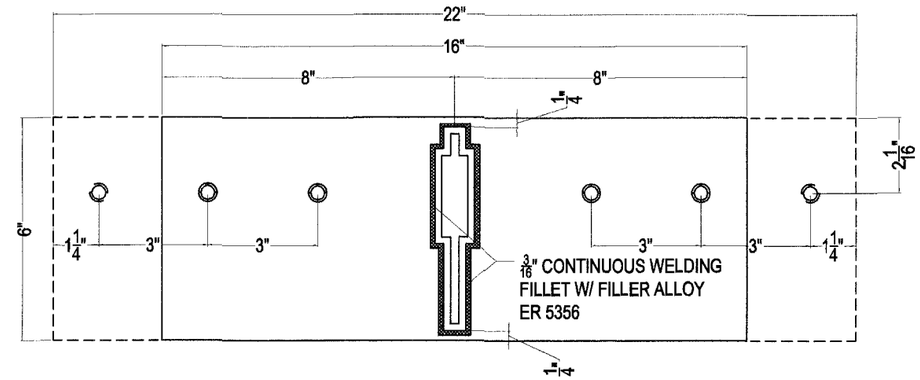

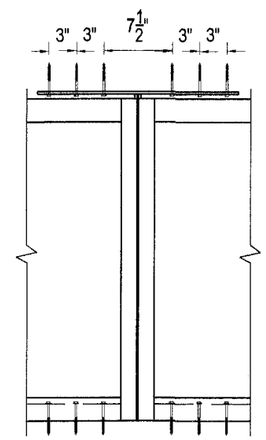

B6 & D6

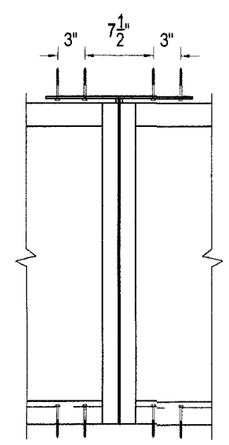

B4, D4 & E4

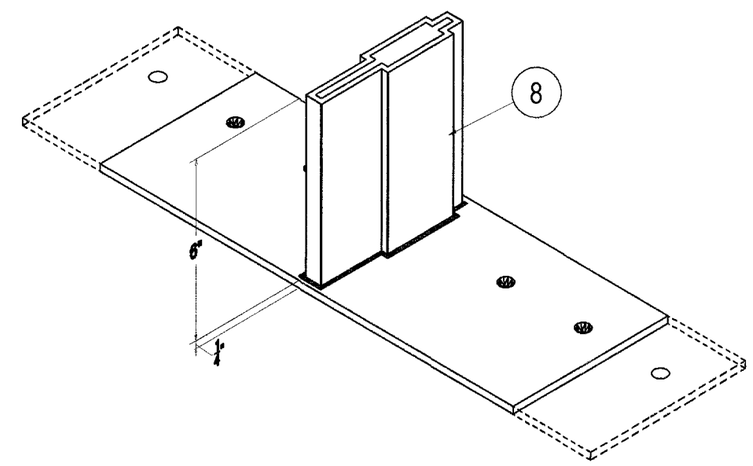

' T ' CLIP DETAILS

NOTE: ONLY CLUSTER OF FASTENERS IS REQUIRED AT ENDS OF VERTICAL MEMBERS WITH THIS INSTALLATION OPTION

Approved as complying with the Florida Building Code
Date AUG. 5, 2009
NOA# 09-0520.11
Miami-Dade Product Control Division
By Maurice Perez

Jorge E. Valdes
Fla. PE# 67398
C.A.N. 28565

MAY 19 2009

Miami Wall Systems, Inc.
701 West 25th Street
Hialeah, Florida. 33010
Phone:(305) 888-2300 Fax:(305) 888-3058

WINDOW WALL SYSTEMS SERIES 6000

ANCHORAGE AT MULLION ENDS FOR FRAME HEIGHT UP TO 168"

NO.	DATE	REVISION

DATE: 5/18/2009
SCALE: AS NOTED
DWG. BY: L.R.A
CHK. BY: JV
DWG NO.: NOA 6000
SHEET 11 OF 12

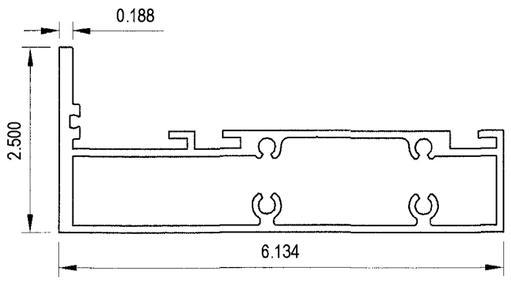

1 FRAME
MATERIAL: ALUM. ALLOY 6005-T5
TYP. WALL: .100

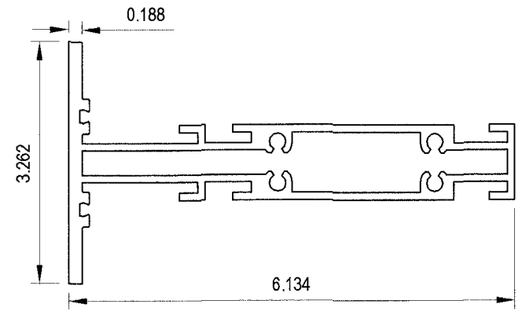

2 TRUE MUNTIN
MATERIAL: ALUM. ALLOY 6005-T5
TYP. WALL: .100

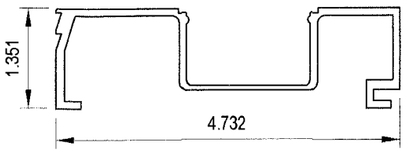

3 GLAZING BEAD TYPE "A" FOR 9/16" GLASS
MATERIAL: ALUM. ALLOY 6005-T5
TYP. WALL: .100

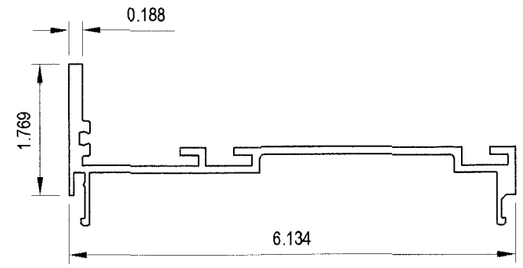

4 MALE VERTICAL MULLION
MATERIAL: ALUM. ALLOY 6005-T5
TYP. WALL: .100

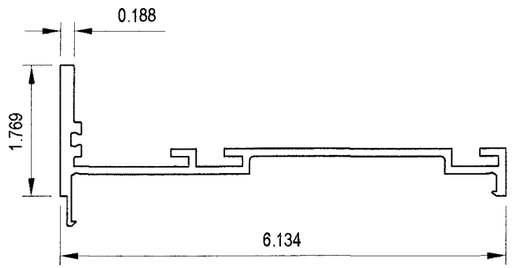

5 FEMALE VERTICAL MULLION
MATERIAL: ALUM. ALLOY 6005-T5
TYP. WALL: .100

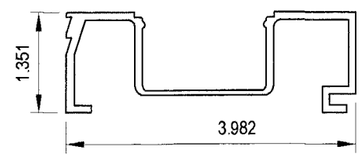

6 GLAZING BEAD TYPE "A" FOR I.G.-LAMI GLASS
MATERIAL: ALUM. ALLOY 6005-T5
TYP. WALL: .100

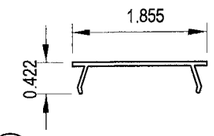

7 FASTENER COVER
MATERIAL: ALUM. ALLOY 6005-T5
TYP. WALL: .05

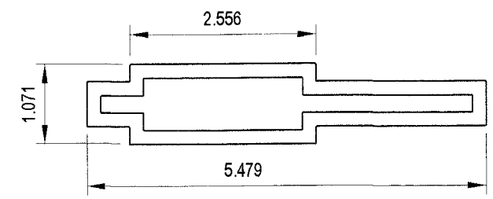

8 VERTICAL MULLION REINFORCEMENT
MATERIAL: ALUM. ALLOY 6005-T5
TYP. WALL: .1875

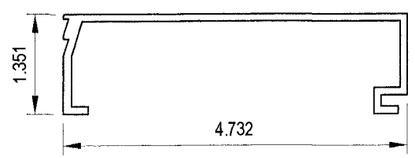

9 GLAZING BEAD TYPE "B" FOR 9/16" GLASS
MATERIAL: ALUM. ALLOY 6005-T5
TYP. WALL: .100

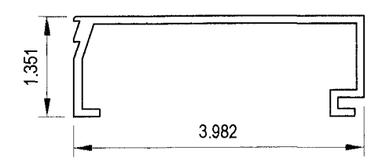

10 GLAZING BEAD TYPE "B" FOR I.G.-LAMI GLASS
MATERIAL: ALUM. ALLOY 6005-T5
TYP. WALL: .100

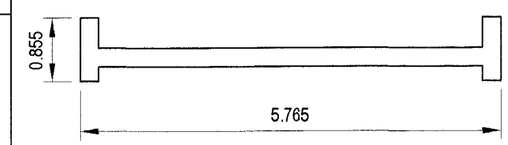

11 JAMB REINFORCEMENT
MATERIAL: ALUM. ALLOY 6005-T5
TYP. WALL: .250

BILL OF MATERIALS

ITEM No.	PART No.	REQ'D	PART NAME	REMARKS
1	6000-001	AS REQ' D	FRAME	HEAD, SILL & JAMBS
2	6000-002	AS REQ' D	TRUE MUNTIN	
3	6000-003	4 PER PANEL	GLAZING BEAD TYPE 'A'	FOR $\frac{9}{16}$" LAMINATED GLASS
4	6000-004	1 PER PANEL	MALE VERTICAL MULLION	
5	6000-005	1 PER PANEL	FEMALE VERTICAL MULLION	
6	6000-006	4 PER PANEL	GLAZING BEAD TYPE 'A'	FOR INSULATED - LAMINATED GLASS
7	6000-007	4 PER PANEL	FASTENER COVER	
8	6000-010	AS REQ' D	VERTICAL MULLION REINFORCEMENT	LENGTH = MULLION LENGTH - 7" @ TOP
9	6000-008	4 PER PANEL	GLAZING BEAD TYPE 'B'	FOR $\frac{9}{16}$" LAMINATED GLASS
10	6000-009	4 PER PANEL	GLAZING BEAD TYPE 'B'	FOR INSULATED - LAMINATED GLASS
11	6000-011	AS REQ'D	VERTICAL JAMB REINFORCEMENT	LENGTH = JAMB LENGTH - 7" @ TOP
12		AS REQ'D	#14 X 1" LG. TEK SCREW	AT 8" FROM EA. END AND @ MIDSPAN
13		AS REQ'D	" L " CLIP	AT TOP OF JAMBS (SEE DETAILS ON SHEET 11)
14		AS REQ'D	" T " CLIP	AT TOP OF VERTICAL MULLIONS (SEE DETAILS ON SHEET 9)
15		AS REQ'D	SCR-900 PRESET SPACER	
16		AS REQ'D	EPDM WEDGE GASKET	

Approved as complying with the Florida Building Code
Date AUG. 5, 2009
NOA# 09-0520.11
Miami Dade Product Control Division
By

Jorge E. Valdes
Fla. PE# 67398
C.A.N. 28565

MAY 19 2009

Miami Wall Systems, Inc.
701 West 25th Street
Hialeah, Florida. 33010
Phone:(305) 888-2300 Fax:(305) 888-3058

WINDOW WALL SYSTEMS SERIES 6000

EXTRUSION DETAILS & BILL MATERIALS

NO.	DATE	REVISION

DATE: 5/18/2009
SCALE: AS NOTED
DWG. BY: L.R.A
CHK. BY: JV
DWG NO.: NOA 6000
SHEET 12 OF 12