MIAMI-DADE COUNTY
BUILDING CODE COMPLIANCE OFFICE (BCCO)
PRODUCT CONTROL DIVISION

MIAMI-DADE COUNTY, FLORIDA
METRO-DADE FLAGLER BUILDING
140 WEST FLAGLER STREET, SUITE 1603
MIAMI, FLORIDA 33130-1563
(305) 375-2902 FAX (305) 372-6339
www.miamidade.gov/buildingcode

NOTICE OF ACCEPTANCE (NOA)

Rolling Shield Inc.
2500 N. W. 74th Avenue
Miami, FL 33122

SCOPE:

This NOA is being issued under the applicable rules and regulations governing the use of construction materials. The documentation submitted has been reviewed by Miami–Dade County Product Control Division and accepted by the Board of Rules and Appeals (BORA) to be used in Miami–Dade County and other areas where allowed by the Authority Having Jurisdiction (AHJ).

This NOA shall not be valid after the expiration date stated below. The Miami–Dade County Product Control Division (In Miami–Dade County) and/or the AHJ (in areas other than Miami–Dade County) reserve the right to have this product or material tested for quality assurance purposes. If this product or material fails to perform in the accepted manner, the manufacturer will incur the expense of such testing and the AHJ may immediately revoke, modify, or suspend the use of such product or material within their jurisdiction. BORA reserves the right to revoke this acceptance, if it is determined by Miami–Dade County Product Control Division that this product or material fails to meet the requirements of the applicable building code.

This product is approved as described herein, and has been designed to comply with the Florida Building Code, including the High Velocity Hurricane Zone.

DESCRIPTION: Series Extruded Aluminum 60mm Slat Roll–Up Shutters – L.M.I.

APPROVAL DOCUMENT: Drawing No. **09–041**, titled "60mm Slat Roll–Up Shutter", prepared by Tilteco Inc., dated 06/01/09, sheets 1 through 16 of 16 including 1A, 3A, 5A, 5B & 14A, with revision "1" dated 04/03/09, signed and sealed by Walter A. Tillit Jr., P. E., bearing the Miami–Dade County Product Control Revision stamp with the Notice of Acceptance number and expiration date by the Miami–Dade County Product Control Division.

MISSILE IMPACT RATING: Large and Small Missile Impact Resistant

LIMITATIONS:

1. Roll-up Mechanism is Not part of this approval and must be certified by independent testing agency.
2. Minimum separation from interior storm bar to existing glass shall be as shown on sheet 12 of 16.

LABELING: Each unit shall bear a permanent label with the manufacturer's name or logo, city, state and following statement: "Miami–Dade County Product Control Approved", unless otherwise noted herein.

RENEWAL of this NOA shall be considered after a renewal application has been filed and there has been no change in the applicable building code negatively affecting the performance of this product.

TERMINATION of this NOA will occur after the expiration date or if there has been a revision or change in the materials, use, and/or manufacture of the product or process. Misuse of this NOA as an endorsement of any product, for sales, advertising or any other purposes shall automatically terminate this NOA. Failure to comply with any section of this NOA shall be cause for termination and removal of NOA.

ADVERTISEMENT: The NOA number preceded by the words Miami–Dade County, Florida, and followed by the expiration date may be displayed in advertising literature. If any portion of the NOA is displayed, then it shall be done in its entirety.

INSPECTION: A copy of this entire NOA shall be provided to the user by the manufacturer or its distributors and shall be available for inspection at the job site at the request of the Building Official.

This NOA **revises NOA # 05–0929.03** and consists of this page 1 and evidence pages E–1 and E–2, as well as approval document mentioned above.

The submitted documentation was reviewed by **Jaime D. Gascon, P. E.**

MIAMI-DADE COUNTY APPROVED

JGascon
7/2/09

Rolling Shield Inc.

NOTICE OF ACCEPTANCE: EVIDENCE SUBMITTED

A. DRAWINGS

1. Manufacturer's die drawings and sections.
2. Drawing No **09–041**, titled "60mm Slat Roll–Up Shutter", prepared by Tilteco Inc., dated 06/01/09, sheets 1 through 16 of 16 including 1A, 3A, 5A, 5B & 14A, with revision "1" dated 04/03/09, signed and sealed by Walter A. Tillit Jr., P. E.

B. TESTS

1. Test report on: 1) Uniform Static Air Pressure Test per PA 202,
   2) Large Missile Impact Test per PA 201
   3) Cyclic Wind Pressure Test per PA 203

   along with marked–up drawings and installation diagram of Series CD40, of Aluminum Roll–Up Shutters, prepared by Fenestration Testing Laboratory, Inc., Test Reports No.'s **FTL 2485** dated 01/12/2000 and **FTL3013** dated March 13, 2001, signed and sealed by A. P. Gonzalez, P. E.
   (Submitted under previous Association NOA # 06–0143)
2. Test report on: 1) Large Missile Impact Test per PA 201,
   along with marked–up drawings and installation diagram of Aluminum Storm Bar, prepared by Fenestration Testing Laboratory, Inc., Report No.'s **FTL. 2637, 2639, 2640, 2641** and **2642**, all dated 07/25/2000, signed and sealed by A. P. Gonzalez, P. E.
   (Submitted under previous Association NOA # 06–0143)
3. Test report on: 1) Simple Loading Test, per FBC
   along with marked–up drawings and installation of Aluminum Storm Bar, prepared by Fenestration Testing Laboratory, Inc., Report No. **FTL 3013**, dated 03/13/2001, signed and sealed by A. Acevedo, P. E.
   (Submitted under previous Association NOA # 06–0143)
4. Test report on: 1) Impact Test, per FBC, ASTM D 256,
   2) Flexural Test, per FBC, ASTM D790
   3) Tensile Property Tests, per FBC, ASTM D638

   along with marked–up drawings and installation of plastic sample, prepared by Certified Testing Laboratories, Inc., Report No. **CTL 0410G**, dated 04/09/2001 signed and sealed by Ramesh Patel, P. E.
   (Submitted under previous Association NOA # 06–0143)

C. CALCULATIONS

1. Comparative analysis for slats; storm bars, headers, tracks, mullions and anchors, using rational analysis dated 04/23/09, pages 1 through 201 of 201, prepared by Tilteco, Inc. signed and sealed by Walter A. Tillit Jr., P. E.
   (Submitted under Association NOA # 09–0613)

Jaime D. Gascon, P. E.
Chief, Product Control Division
NOA No. 09–0527.06
Expiration Date: June 07, 2014
Approval Date: July 02, 2009

NOTICE OF ACCEPTANCE: EVIDENCE SUBMITTED

D. QUALITY ASSURANCE

1. Miami Dade Building Code Compliance Office (BCCO).

E. MATERIAL CERTIFICATIONS

1. None.

E. STATEMENTS

1. Statement Letter of product compliance to FBC and "No financial interest" dated April 09, 2007, signed and sealed by Walter A. Tillit Jr., P. E.
   (Submitted under Association NOA # 09–0611)
2. Laboratory compliance letter for Test Report No. **FTL. 2637, 2639, 2640, 2641** and **2642**, issued by Fenestration Testing Laboratory, Inc., dated July 25, 2000, signed and sealed by A. P. Gonzalez, P. E.
   (Submitted under previous Association NOA # 06–0143)
3. Laboratory compliance letter for Test Report No. **FTL 3013**, issued by Fenestration Testing Laboratory, Inc., dated March 13, 2001, signed and sealed by A. Acevedo, P. E.
   (Submitted under previous Association NOA # 06–0143)
4. Laboratory compliance letter for Test Report No. **CTL 0410G**, issued by Certified Testing Laboratories, Inc., dated April 09, 2001, signed and sealed by Ramesh Patel, P. E.
   (Submitted under previous Association NOA # 06–0143)

G. OTHERS

1. Notice of Acceptance No. **05–0929.03**, issued to Rolling Shield, Inc. for their Series "Extruded Aluminum 60mm Slat Roll–Up Shutters", approved on 05/07/07 and expiring on 06/07/09.
2. This NOA is approved as a Member of the National Shutter Association, Inc.
   (Submitted under Association NOA # 09–0611)
3. Release letter issued by National Shutter Association, Inc on 06/29/09 for "40mm Rolling Shield Shutters, signed by Sam Downs, Association President.
4. Acknowledgement letter issued by Rolling Shield, Inc. on 06/29/09, signed by Jose A. Delgado, President of Rolling Shield, Inc.
5. Acceptance letter issued to Rolling Shield, Inc. on 07/01/09, signed by Jose A. Delgado, President of Rolling Shield, Inc. and signed by Rolf – Christian Friedrich, Miami–Dade County BCCO – Product Control Engineer 1.

Jaime D. Gascon, P. E.
Chief, Product Control Division
NOA No. 09–0527.06
Expiration Date: June 07, 2014
Approval Date: July 02, 2009

GENERAL NOTES:

1. ROLL-UP SHUTTER SHOWN ON THIS PRODUCT APPROVAL DOCUMENT (P.A.D.) HAS BEEN VERIFIED FOR CODE COMPLIANCE IN ACCORDANCE WITH THE 2007 EDITION OF THE FLORIDA BUILDING CODE.
   THIS ROLL-UP SHUTTER MAY BE INSTALLED AT HIGH VELOCITY HURRICANE ZONES (MIAMI-DADE/BROWARD COUNTIES).
   DESIGN WIND LOADS SHALL BE DETERMINED AS PER SECTION 1620 OF THE ABOVE MENTIONED CODE.
   IN ORDER TO VERIFY THAT COMPONENTS AND ANCHORS ON THIS P.A.D. AS TESTED WERE NOT OVER STRESSED, A 33% INCREASE IN ALLOWABLE STRESS FOR WIND LOADS WAS **NOT** USED IN THEIR ANALYSIS.
   FASTENERS SPACING INTO WOOD HAS BEEN DETERMINED IN ACCORDANCE WITH N.D.S. 2005.

   ROLL-UP SHUTTER'S ADEQUACY FOR IMPACT AND FATIGUE RESISTANCE HAS BEEN VERIFIED IN ACCORDANCE WITH SECTION 1626 OF THE ABOVE MENTIONED CODE AS PER TAS-201, 202 & 203 PROTOCOLS, AS PER FENESTRATION TESTING LAB. REPORTS # 2639, 2606, 2640, 2641, 2642, 2637, 2736, 2737 & 3013.

2. ALL ALUMINUM EXTRUSIONS SHALL BE ALUMINUM ASSOCIATION 6063-T6 ALLOY & TEMPER (UNLESS OTHERWISE NOTED).

3. ALL SCREWS TO BE STAINLESS STEEL 304 OR 316 AISI SERIES OR CORROSION RESISTANT COATED CARBON STEEL AS PER DIN 50018 W/ 50 ksi YIELD STRENGTH AND 90 ksi TENSILE STRENGTH. ALL TEK SCREWS SHALL BE AS MANUFACTURED BY ITW BUILDEX, INC.

4. BOLTS TO BE ASTM A-307 GALVANIZED STEEL OR AISI 304 SERIES STAINLESS STEEL, WITH 35 ksi MINIMUM YIELD STRENGTH.

5. STORM BARS AT FLOOR AND CEILING MOUNTING INSTALLATIONS MAY BE REMOVABLE AT NON HURRICANE CONDITIONS. HOWEVER, EACH STORM BAR SHALL BEAR A PERMANENT LABEL IN A VISIBLE PLACE WITH A WARNING NOTE INSTRUCTING THE TENANT OR OWNER THAT STORM BARS MUST BE INSTALLED WITH CORRESPONDING HARDWARE DURING PERIODS OF HURRICANE WARNING AND THAT ROLL UP SHUTTERS WILL NOT OFFER HURRICANE PROTECTION UNLESS ALL STORM BAR ARE INSTALLED AS DIRECTED.

6. REMOVABLE STORM BARS SHALL BE STORED IN A CONSPICUOUS PLACE WITH EASY AND IMMEDIATE ACCESS SO THAT THEY CAN BE REACHED AND INSTALLED ANY TIME (HURRICANE CONDITIONS OR NOT) SLATS ARE ROLLED DOWN. THE EFFECT OF THE SLATS ROLLED DOWN WITHOUT STORM BARS IS; THOSE SLATS WILL SLIP OUT OF TRACK DUE TO THE DEFLECTION CAUSED BY WIND FORCES.
   WHEN REMOVING STORM BARS, ONE STORM BAR SHALL ALWAYS BE LEFT INSTALLED (SHALL NOT BE REMOVED). THIS CONDITION IS ONLY REQUIRED FOR HEADER SPANS EQUAL OR GREATER THAN 12'-0".

7. ANCHORS TO WALL FOR SIDE RAILS & BOX CONNECTION SHALL BE AS FOLLOWS (UNLESS OTHERWISE NOTED):

   (A) TO EXISTING POURED CONCRETE (Min. f'c=3192 psi):
   - 1/4"ø TAPCON ANCHORS, AS MANUFACTURED BY ITW BUILDEX, INC.

   NOTES:
   A.1) MINIMUM EMBEDMENT OF TAPCON ANCHORS INTO POURED CONCRETE IS 1 3/4". NO EMBEDMENT INTO STUCCO SHALL BE CONSIDERED AS PART OF THE REQUIRED EMBEDMENT.
   A.2) IN CASE THAT PRECAST STONE, PRECAST CONCRETE PANELS, OR PAVERS BE FOUND ON THE EXISTING WALL OR FLOOR, ANCHORS SHALL BE LONG ENOUGH TO REACH THE MAIN STRUCTURE BEHIND SUCH PANELS. ANCHORAGE SHALL BE AS INDICATED ON NOTE A.1 ABOVE.

   (B) TO EXISTING CONCRETE BLOCK WALL (ASTM C-90):
   - 1/4" ø TAPCON ANCHORS AS MANUFACTURED BY ITW BUILDEX, INC.

   NOTES:
   B.1) MINIMUM EMBEDMENT OF TAPCON ANCHORS INTO CONCRETE BLOCK UNIT SHALL BE 1 1/4".
   B.2) IN CASE THAT PRECAST STONE OR PRECAST CONCRETE PANELS BE FOUND ON THE EXISTING WALL, ANCHORS SHALL BE LONG ENOUGH TO REACH THE MAIN STRUCTURE BEHIND SUCH PANELS. ANCHORAGE SHALL BE AS INDICATED ON NOTE B.1 ABOVE.

   (C) TO EXISTING WOOD FRAME BUILDING: SOUTHERN PINE #2 W/ G=0.55 MIN.
   - 1/4"ø LAG SCREWS PER N.D.S.

   NOTES:
   C.1) MINIMUM THREADED PENETRATION OF LAG SCREWS INTO THE WOOD FRAME UNIT SHALL BE 1 1/2" NO THREADED PENETRATION INTO STUCCO SHALL BE CONSIDERED AS PART OF THE REQUIRED THREADED PENETRATION.
   C.2) MINIMUM EDGE DISTANCE OF LAG SCREWS INTO WOOD SHALL BE AS INDICATED ON SHEET 11.
   C.3) IN CASE THAT PRECAST STONE, PRECAST CONCRETE OR BRICK PANELS, VENEER OR PAVERS BE FOUND ON THE EXISTING WALL, ANCHORS SHALL BE LONG ENOUGH TO REACH THE MAIN SUBSTRATE BEHIND SUCH PANELS.
   MINIMUM THREADED PENETRATION SHALL BE AS INDICATED ON NOTE C.1 ABOVE.

8. ANCHORS SHALL BE INSTALLED FOLLOWING ALL OF THE RECOMMENDATIONS AND SPECIFICATIONS OF THE ANCHOR'S MANUFACTURER.

9. ANCHORS REQUIRED FOR STORM BARS, HEADER & MULLIONS CONNECTIONS TO CONCRETE (MIN. f'c=3000 PSI) SHALL BE AS SPECIFIED ON APPLICABLE SECTIONS SHOWN ON SHEETS 5, 5A, 5B, 6, 7, 8 & 10 OF 16 RESPECTIVELY.

   -CALK-IN ANCHORS TO BE AS MANUFACTURED BY POWERS FASTENERS, INC.
   -TAPCON ANCHORS AS MANUFACTURED BY ITW BUILDEX, INC.
   -KWIK BOLT TZ EXPANSION ANCHORS AS MANUFACTURED BY HILTI, INC.

   MINIMUM EDGE DISTANCE AND SPACING FOR ABOVE MENTIONED ANCHORS SHALL BE AS INDICATED BELOW OR AT ABOVE MENTIONED SHEET. EDGE DISTANCE AND EMBEDMENTS ARE BEYOND ANY FINISH MATERIAL.

ANCHOR	SPACING	EDGE DISTANCE	MINIMUM EMBEDMENT POURED CONCRETE	MINIMUM EMBEDMENT CONCRETE BLOCK
-1/4"ø TAPCON	3"	3"	1 3/4" (Min. f'c=3192 psi)	1 1/4" (ASTM C-90)
-1/4"ø CALK-IN	2 1/2"	3"	7/8" (Min. f'c=3000 psi)	-
-3/8"ø CALK-IN	3 3/4"	4 1/2"	1 1/4" (Min. f'c=3000 psi)	-
-1/2"ø CALK-IN	5"	6"	1 1/2" (Min. f'c=3000 psi)	-
-5/16"ø TAPCON XL	3 3/4"	4"	-	1 3/4" (ASTM C-90, GROUT FILLED)
-3/8"ø KWIK BOLT TZ	6"	4 3/8"	2" (Min. f'c=3000 psi)	-
-1/2"ø KWIK BOLT TZ	9 3/4"	6"	3 1/4" (Min. f'c=3000 psi)	-

10. POLYETHYLENE BLOCKS USED AT SPRING LOADED SYSTEM FOR REMOVABLE STORM BARS SHALL COMPLY WITH THE FOLLOWING SPECIFICATIONS:

ASTM DESIGNATION	PROPERTIES	VALUE
D256	IMPACT RESISTANCE	7.95 FT-Lb/In (AVERAGE)
D638	TENSILE CAPACITY	4243 psi (AVERAGE)
D790	FLEXURAL CAPACITY	1012 psi (AVERAGE)

11. IT SHALL BE THE RESPONSIBILITY OF THE CONTRACTOR TO VERIFY THE SOUNDNESS OF THE STRUCTURE WHERE SHUTTER IS TO BE ATTACHED TO INSURE PROPER ANCHORAGE. THIS SHUTTER SHALL ONLY BE ATTACHED TO CONCRETE, BLOCK OR WOOD FRAME BUILDINGS.

12. THE INSTALLATION CONTRACTOR IS TO SEAL/CAULK ALL SHUTTER COMPONENT EDGES WHICH REMAIN IN CONTINUOUS CONTACT WITH THE BUILDING TO PREVENT WIND/RAIN INTRUSION. CAULK AND SEAL SHUTTER TRACKS ALL AROUND FULL LENGTH.

13. SHUTTER MANUFACTURER'S LABEL SHALL BE PLACED ON THE EXPOSED SURFACE OF THE SIDE RAIL APPROXIMATELY 4" ABOVE THE BOTTOM OF SUCH RAIL.
    LABEL SHALL READ AS FOLLOWS:
    ROLLINGSHIELD, INC.
    MIAMI, FL
    MIAMI-DADE COUNTY PRODUCT CONTROL APPROVED.

14. ROLL-UP MECHANISM NOT PART OF THIS APPROVAL, BUT SHALL BE CERTIFIED BY AN INDEPENDENT TESTING AGENCY.

15. ROLL-UP SHUTTER INSTALLATION SHALL COMPLY WITH SPECS INDICATED IN THIS DRAWING PLUS ANY BUILDING AND ZONING REGULATIONS PROVIDED BY THE JURISDICTION WHERE PERMIT IS APPLIED TO.

16. (a) THIS P.A.D. PREPARED BY THIS ENGINEER IS GENERIC AND DOES NOT PROVIDE INFORMATION FOR A SITE SPECIFIC PROJECT; i.e. WHERE THE SITE CONDITIONS DEVIATE FROM THE P.A.D.

    (b) CONTRACTOR TO BE RESPONSIBLE FOR THE SELECTION, PURCHASE AND INSTALLATION INCLUDING LIFE SAFETY OF THIS PRODUCT, BASED ON THIS P.A.D. PROVIDED HE/SHE DOES NOT DEVIATE FROM THE CONDITIONS DETAILED ON THIS DOCUMENT. CONSTRUCTION SAFETY AT SITE IS THE CONTRACTOR'S RESPONSIBILITY.

    (c) THIS P.A.D. WILL BE CONSIDERED INVALID IF ALTERED BY ANY MEANS.

    (d) SITE SPECIFIC PROJECTS SHALL BE PREPARED BY A FLORIDA REGISTERED ENGINEER OR ARCHITECT WHICH WILL BECOME THE ENGINEER OF RECORD (E.O.R.) FOR THE PROJECT AND WHO WILL BE RESPONSIBLE FOR THE PROPER USE OF THE P.A.D.
    ENGINEER OF RECORD, ACTING AS A DELEGATED ENGINEER TO THE P.A.D. ENGINEER, SHALL SUBMIT TO THIS LATTER THE SITE SPECIFIC DRAWINGS FOR REVIEW.

    (e) THIS P.A.D. SHALL BEAR THE DATE AND ORIGINAL SEAL AND SIGNATURE OF THE PROFESSIONAL ENGINEER OF RECORD THAT PREPARED IT.

PRODUCT REVISED
as complying with the Florida Building Code
Acceptance No 09-0527.06
Expiration Date June 07, 2014
By
Miami Dade Product Control Division

JUN 01 2009

Florida Building Code (High Velocity Hurricane Zone)

© 2009 TILTECO INC.

TILTECO INC.
TILLIT TESTING & ENGINEERING COMPANY
6355 N.W. 36th. St., Ste. 305, VIRGINIA GARDENS, Fl. 33166
Phone : (305)871-1530 . Fax : (305)871-1531
e-mail: tilteco@aol.com
EB-0006719
WALTER A. TILLIT Jr. P.E.
FLORIDA Lic. # 44167

60mm SLAT ROLL-UP SHUTTER

ROLLINGSHIELD, INC.
(N.S.A.# 1)
2500 N.W. 74th AVE.
MIAMI, FL. 33122
Phone : (305)436-6661 . Fax : (305)436-5523

REV. No	DESCRIPTION	DATE	REV. No	DESCRIPTION	DATE
1	OLD 05-218	4/3/09			
2					

DRAWN BY: L.G.
4/3/09 DATE
09-041 DRAWING No
SHEET 1 OF 16

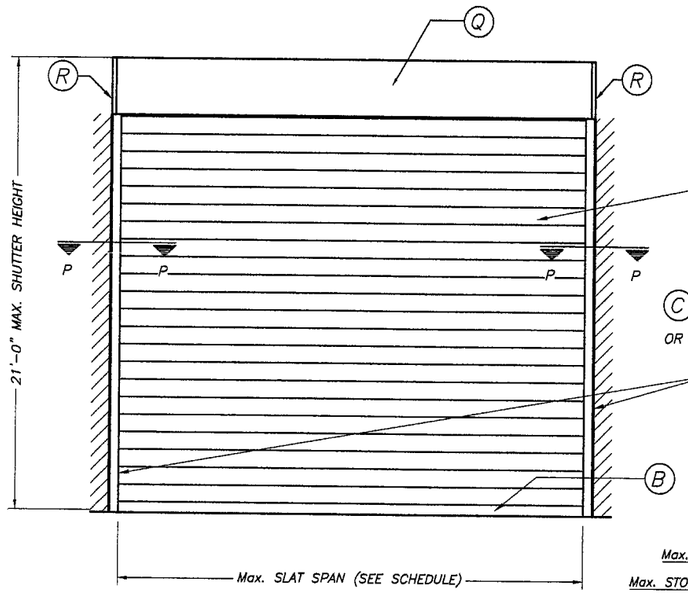

TYPICAL SINGLE UNIT ELEVATION (NO STORM BARS REQUIRED)

NOTE: SEE SHEET 2, 3, 3A & 9 OF 16 FOR COMPONENTS NOMENCLATURE.

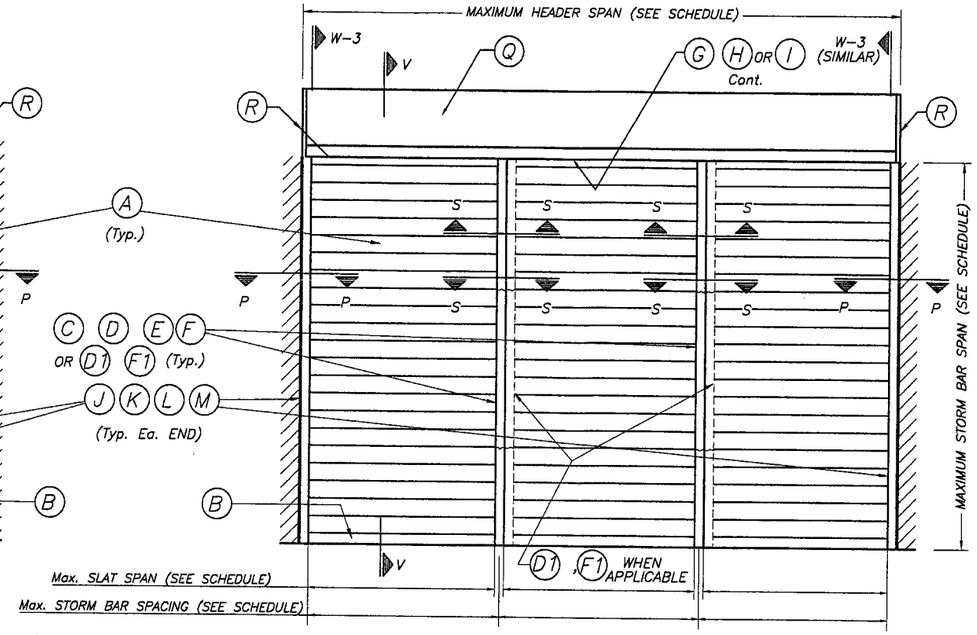

TYPICAL MULTIPLE UNIT ELEVATION (STORM BARS REQUIRED)

NOTE: SEE SHEET 2, 3, 3A & 9 OF 16 FOR COMPONENTS NOMENCLATURE.

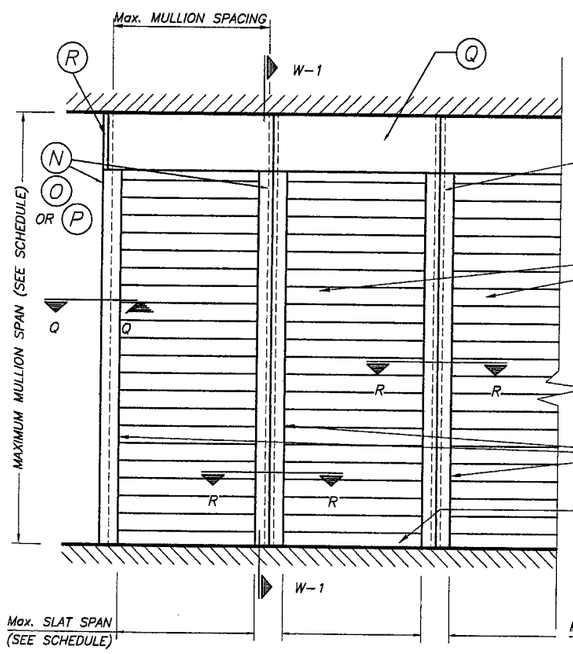

TYPICAL CONSECUTIVE SINGLE UNIT ELEVATION (NO STORM BARS REQUIRED)

NOTE: SEE SHEET 2, 3, 3A & 9 OF 16 FOR COMPONENTS NOMENCLATURE.

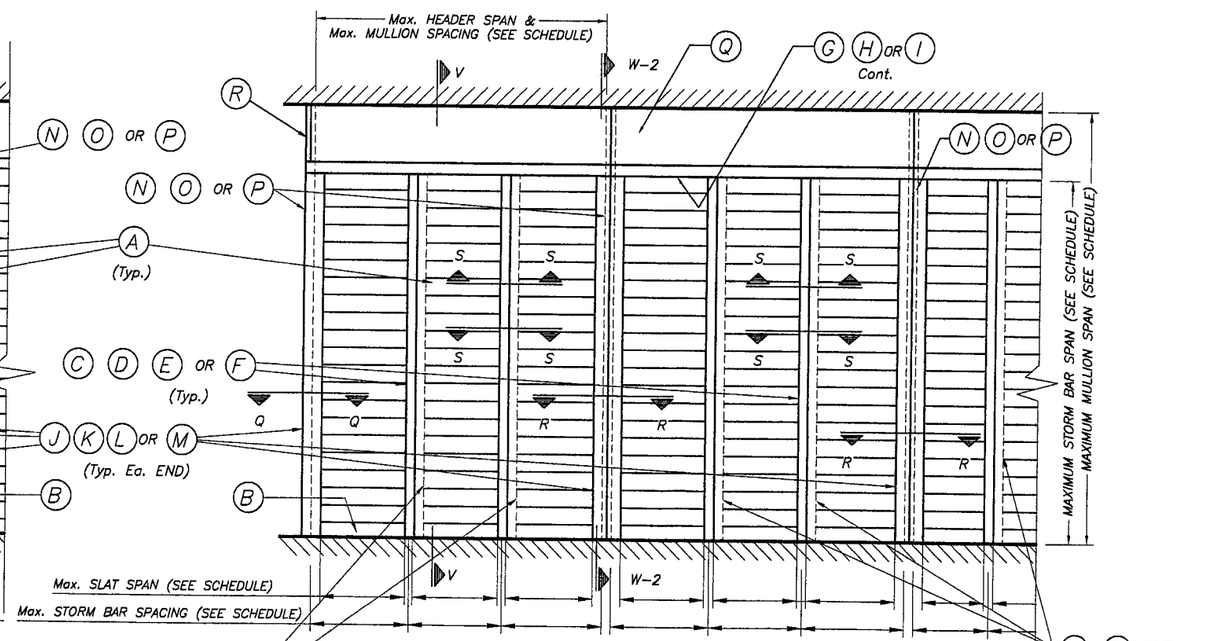

TYPICAL CONSECUTIVE MULTIPLE UNIT ELEVATION (STORM BARS REQUIRED)

NOTE: SEE SHEET 2, 3, 3A & 9 OF 16 FOR COMPONENTS NOMENCLATURE.

D1 F1 WHEN APPLICABLE

WARNING:
THE EXTRUSIONS, PARTS AND COMPONENTS ILLUSTRATED ON THIS PRODUCT APPROVAL DRAWING ARE GENUINE ROLLINGSHIELD PRODUCTS. TO PRESERVE THE INTEGRITY OF DESIGN AND PERFORMANCE STANDARDS, ROLLINGSHIELD EXTRUSIONS, PARTS AND COMPONENTS CANNOT BE SUBSTITUTED. THE MANUFACTURING OF THESE SYSTEM USING PARTS AND COMPONENTS OTHER THAN THOSE SPECIFIED HEREIN OR BY ROLLINGSHIELD IS STRICTLY PROHIBITED AND MAY INVALIDATE THE PRODUCT APPROVAL.

NOTE:
SEE SECTIONS ON SHEETS 4 THRU 11.

JUN 01 2009

PRODUCT REVISED
as complying with the Florida
Building Code
Acceptance No 09-0527.06
Expiration Date June 01 2014
By
Miami Dade Product Control
Division

Florida Building Code (High Velocity Hurricane Zone)

© 2009 TILTECO INC.

TILTECO INC.
TILLIT TESTING & ENGINEERING COMPANY
6355 N.W. 36th. St., Ste. 305, VIRGINIA GARDENS, Fl. 33166
Phone : (305)871-1530 . Fax : (305)871-1531
e-mail: tilteco@aol.com
EB-0006719
WALTER A. TILLIT Jr. P.E.
FLORIDA Lic. # 44167

60mm SLAT ROLL-UP SHUTTER

ROLLINGSHIELD, INC.
(N.S.A.# 1)
2500 N.W. 74th AVE.
MIAMI, FL. 33122
Phone : (305)436-6661 . Fax : (305)436-5523

REV. No	DESCRIPTION	DATE	REV. No	DESCRIPTION	DATE
1	OLD 05-218	4/3/09			
2					

DRAWN BY: LRGE.
4/3/09 DATE
09-041 DRAWING No
SHEET 1A OF 16

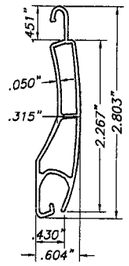

(A) TYPE 1 SLAT:
EXTRUDED ALUMINUM SLAT
6063-T6 ALUMINUM ALLOY
SCALE: 1/2" = 1"

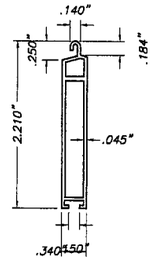

(B) TYPE 2 SLAT:
EXTRUDED ALUMINUM BOTTOM SLAT
6063-T6 ALUMINUM ALLOY
SCALE: 1/2" = 1"

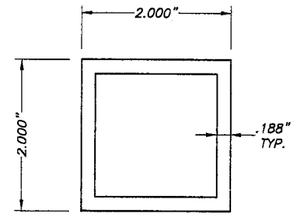

(C) TYPE 1 STORM BAR:
2" EXTRUDED STORM BAR
6063-T6 ALUMINUM ALLOY
SCALE: 1/2" = 1"

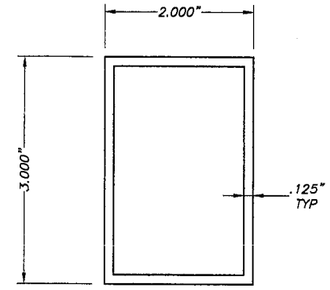

(D) TYPE 2 STORM BAR:
3" EXTRUDED STORM BAR
6063-T6 ALUMINUM ALLOY
SCALE: 1/2" = 1"

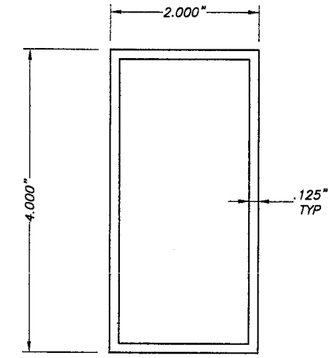

(E) TYPE 3 STORM BAR:
4" EXTRUDED STORM BAR
6063-T6 ALUMINUM ALLOY
SCALE: 1/2" = 1"

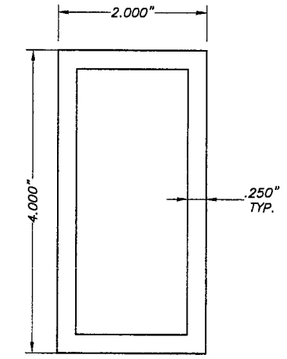

(F) TYPE 4 STORM BAR:
4" HEAVY EXTRUDED STORM BAR
6063-T6 ALUMINUM ALLOY
SCALE: 1/2" = 1"

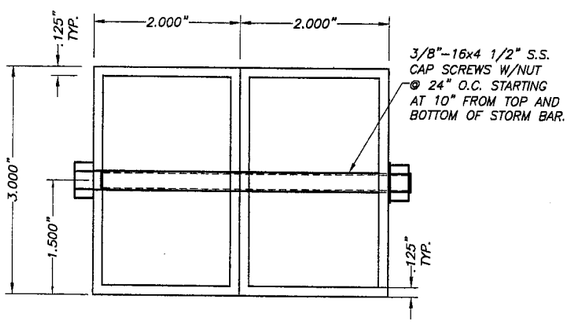

(D1) TYPE 5 STORM BAR:
3" EXTRUDED STORM BAR
6063-T6 ALUMINUM ALLOY
SCALE: 1/2" = 1"

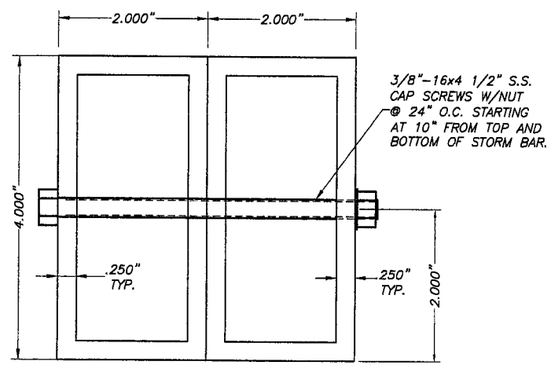

(F1) TYPE 6 STORM BAR:
4" HEAVY EXTRUDED STORM BAR
6063-T6 ALUMINUM ALLOY
SCALE: 1/2" = 1"

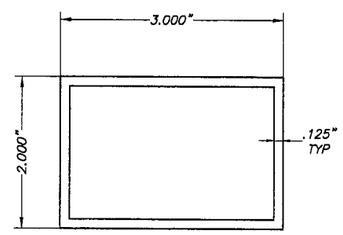

(G) HEADER TYPE 1:
6063-T6 ALUMINUM ALLOY
SCALE: 1/2" = 1"

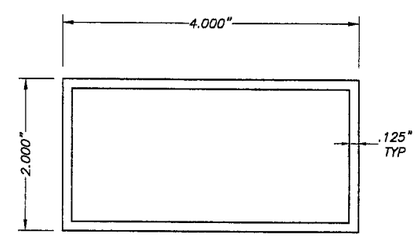

(H) HEADER TYPE 2:
6063-T6 ALUMINUM ALLOY
SCALE: 1/2" = 1"

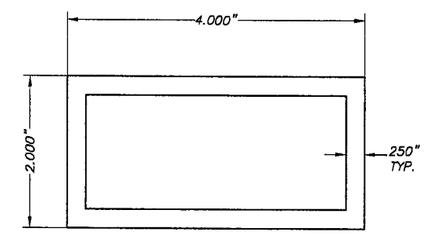

(I) HEADER TYPE 3:
6063-T6 ALUMINUM ALLOY
SCALE: 1/2" = 1"

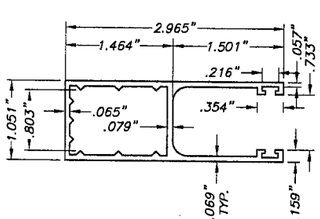

(J) TYPE 1 SIDE RAIL:
6063-T6 Alum. ALLOY
SCALE: 1/2" = 1"

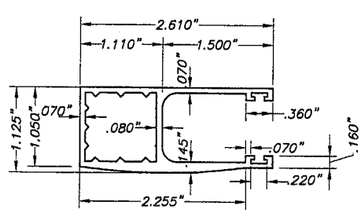

(K) TYPE 2 SIDE RAILS:
6063-T6 Alum. ALLOY
SCALE: 1/2" = 1"

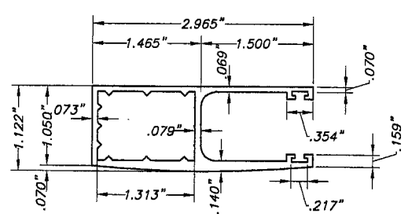

(L) TYPE 3 SIDE RAIL:
6063-T6 Alum. ALLOY
SCALE: 1/2" = 1"

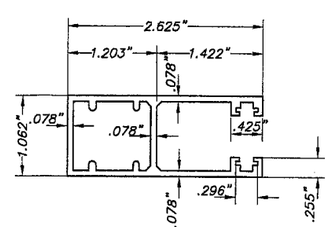

(M) TYPE 4 SIDE RAIL:
6063-T6 Alum. ALLOY
SCALE: 1/2" = 1"

PRODUCT REVISED
as complying with the Florida Building Code
Acceptance No 09-0527.06
Expiration Date June 07, 2014
By
Miami Dade Product Control Division

Florida Building Code (High Velocity Hurricane Zone)

JUN 01 2009

© 2009 TILTECO INC.

TILTECO INC.
TILLIT TESTING & ENGINEERING COMPANY
6355 N.W. 36th. St., Ste. 305, VIRGINIA GARDENS, Fl. 33166
Phone : (305)871-1530 . Fax : (305)871-1531
e-mail: tilteco@aol.com
EB-0006719
WALTER A. TILLIT Jr. P.E.
FLORIDA Lic. # 44167

60mm SLAT ROLL-UP SHUTTER

DRAWN BY: M.C.V./L.G./L.G.

ROLLINGSHIELD, INC.
(N.S.A.# 1)
2500 N.W. 74th AVE.
MIAMI, FL. 33122
Phone : (305)436-6661 . Fax : (305)436-5523

4/3/09
DATE

09-041
DRAWING No

REV. No	DESCRIPTION	DATE	REV. No	DESCRIPTION	DATE
1	OLD 05-218	4/3/09			
2					

SHEET 2 OF 16

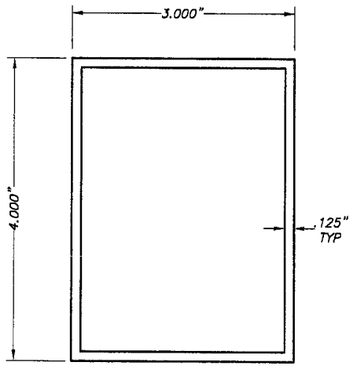

(N) TYPE 1 MULLION:

4" EXTRUDED MULLION
6063–T6 ALUMINUM ALLOY
SCALE: 1/2" = 1"

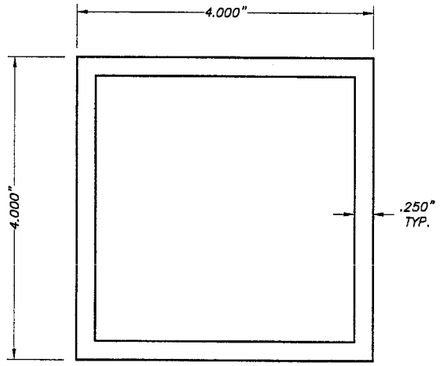

(O) TYPE 2 MULLION:

4" HEAVY EXTRUDED MULLION
6063–T6 ALUMINUM ALLOY
SCALE: 1/2" = 1"

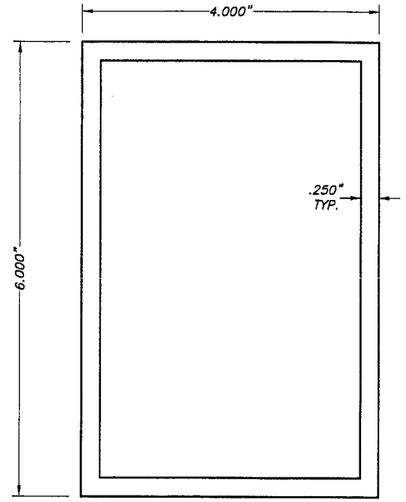

(P) TYPE 3 MULLION:

6" EXTRUDED MULLION
6063–T6 ALUMINUM ALLOY
SCALE: 1/2" = 1"

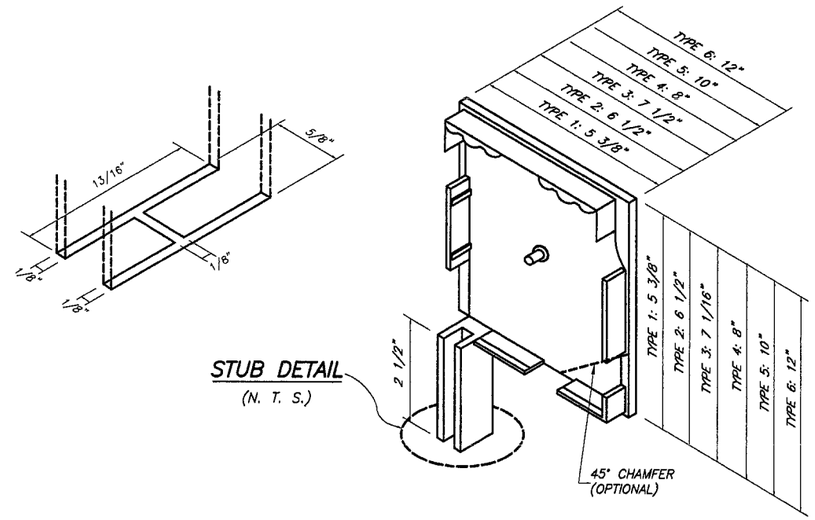

(R) BOX SIDE BRACKET TYPES

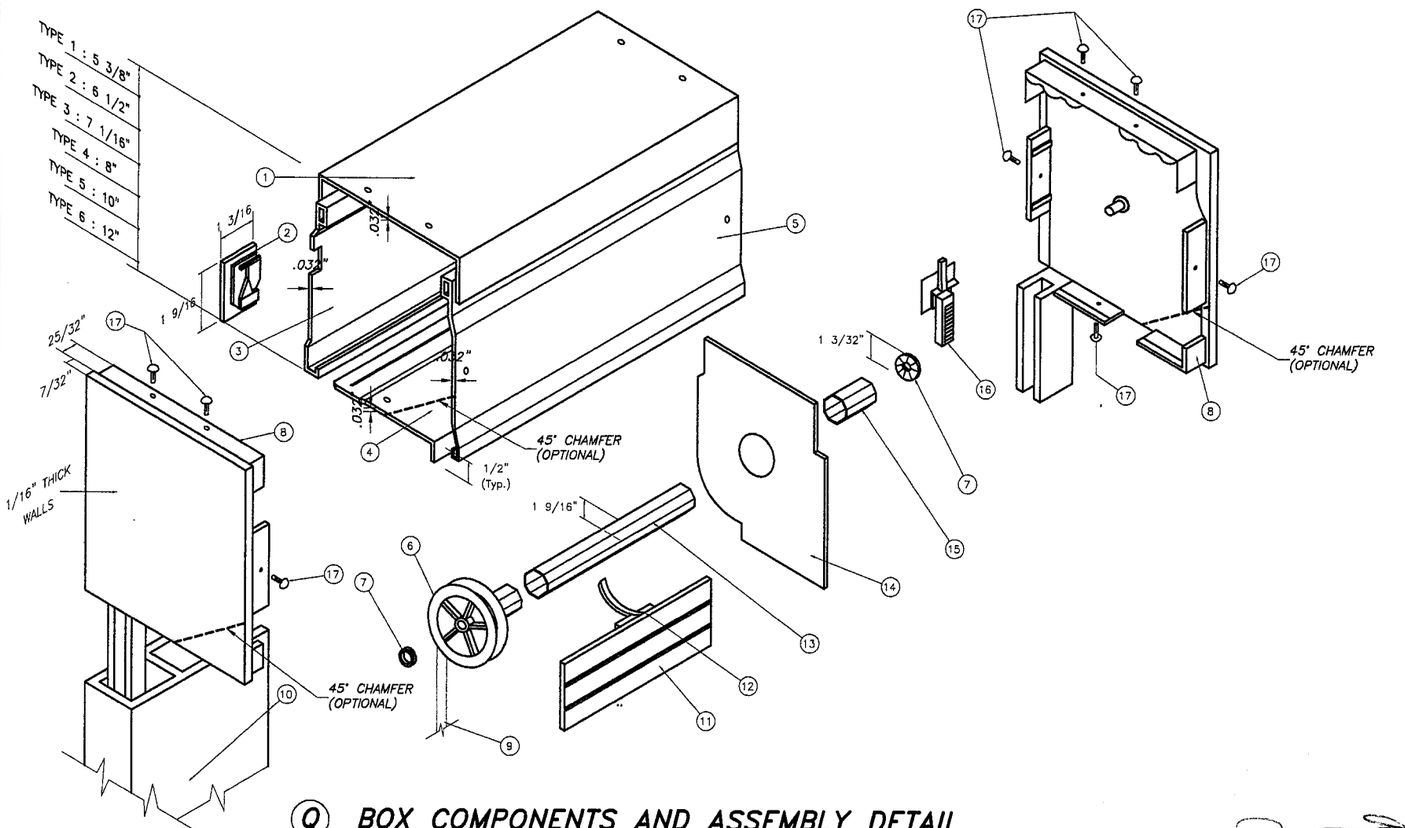

(Q) BOX COMPONENTS AND ASSEMBLY DETAIL

(SEE SHEET 3A OF 16 FOR ALTERNATE ROLL–UP SHUTTER LIFTING MECHANISMS)
(SEE NOTE 13 ON SHEET 1)

1. TOP PROFILE 3005–H28 ALLOY.
2. BOTTOM LEADER W/PLUSH.
3. REAR PROFILE 3005–H28 ALLOY.
4. BOTTOM PROFILE 3005–H28 ALLOY.
5. COVER PROFILE 3005–H28 ALLOY.
6. NYLON DISK: 4 1/4" O. D.
7. ROLLING CUSHION W/BALLS.
8. BOX SIDE BRACKET: CAST ALUMINUM.*
9. RIBBON: 17/32" WIDE.
10. SIDE RAIL.
11. SLAT.
12. EXTRUDED ALUMINUM DRAWING HOOP.
13. GALVANIZED STEEL DRUM: 1 9/16" O. D. x 0.032" Thk.*
14. RETAINING METAL PLATE: 26 Ga. Galv. Stl. AT EACH END.
15. NYLON FERRULE: 1 17/32" O. D. x 0.045" Thk. x 3 5/16" Long.
16. NYLON FUNNEL.
17. SCREWS: # 4 x 1/2" S. S.

* SHALL BE CAPABLE TO SUSTAIN SLAT'S WEIGHT AND ASSURE LIFTING MECHANISM (SEE NOTE 13/1)

PRODUCT REVISED
as complying with the Florida
Building Code
Acceptance No 09-0527.06
Expiration Date June 07, 2014
By
Miami Dade Product Control
Division

Florida Building Code (High Velocity Hurricane Zone)

© 2009 TILTECO INC.

TILTECO INC.
TILLIT TESTING & ENGINEERING COMPANY
6355 N.W. 36th. St., Ste. 305, VIRGINIA GARDENS, Fl. 33166
Phone : (305)871–1530 . Fax : (305)871–1531
e–mail: tilteco@aol.com
EB–0006719
WALTER A. TILLIT Jr. P.E.
FLORIDA Lic. # 44167

JUN 01 2009

60mm SLAT ROLL–UP SHUTTER

DRAWN BY: M.C.V./L.G./L.G.

ROLLINGSHIELD, INC.
(N.S.A.# 1)
2500 N.W. 74th AVE.
MIAMI, FL. 33122
Phone : (305)436–6661 . Fax : (305)436–5523

4/3/09
DATE

09–041
DRAWING No

REV. No	DESCRIPTION	DATE	REV. No	DESCRIPTION	DATE
1	OLD 05–218	4/3/09			
2					

SHEET 3 OF 16

TYPE DRIVE ROLL-UP SHUTTER SYSTEM

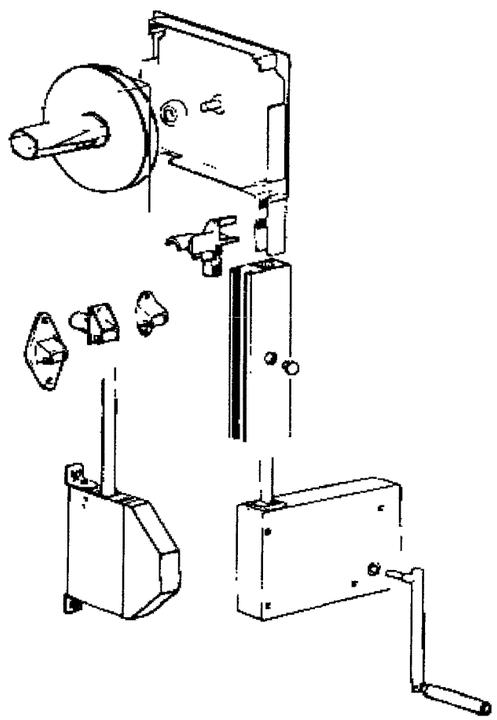

MOTORIZED ROLL-UP SHUTTER SYSTEM

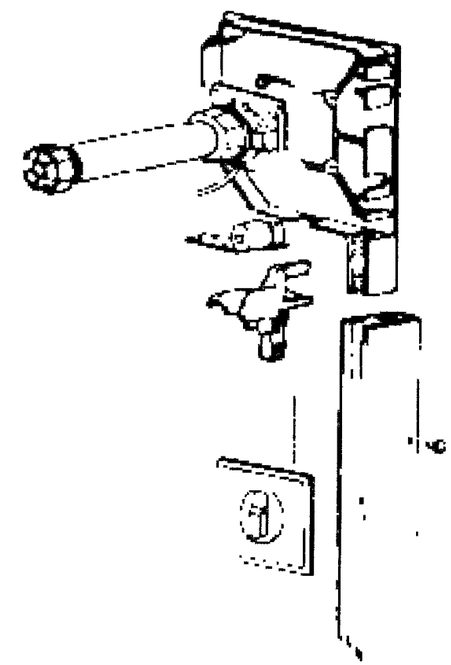

HAND CRANK ROLL-UP SHUTTER SYSTEM

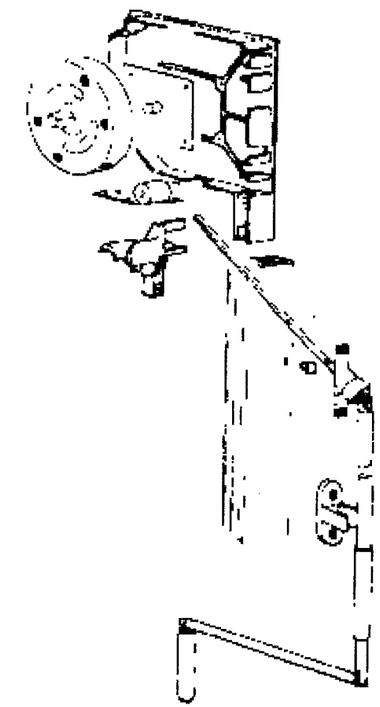

ALTERNATE ROLL-UP SHUTTER LIFTING MECHANISMS

PRODUCT REVISED
as complying with the Florida
Building Code
Acceptance No 09-0527.06
Expiration Date June 07/2014
By
Miami Dade Product Control
Division

Florida Building Code (High Velocity Hurricane Zone)

JUN 01 2009

© 2009 TILTECO INC.

TILTECO INC.
TILLIT TESTING & ENGINEERING COMPANY
6355 N.W. 36th. St., Ste. 305, VIRGINIA GARDENS, Fl. 33166
Phone : (305)871-1530 . Fax : (305)871-1531
e-mail: tilteco@aol.com
EB-0006719
WALTER A. TILLIT Jr. P.E.
FLORIDA Lic. # 44167

60mm SLAT ROLL-UP SHUTTER

ROLLINGSHIELD, INC.
(N.S.A.# 1)
2500 N.W. 74th AVE.
MIAMI, FL. 33122
Phone : (305)436-6661 . Fax : (305)436-5523

REV. No	DESCRIPTION	DATE	REV. No	DESCRIPTION	DATE
1	OLD 05-218	4/3/09			
2					

DRAWN BY: M.C.V./L.G./ L.G.
4/3/09 DATE
09-041 DRAWING No
SHEET 3A OF 16

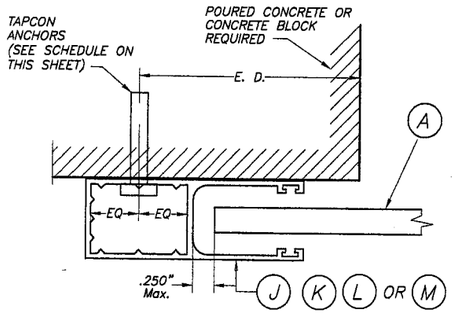

SECTION P – P (1) : WALL MOUNT

SCALE: 1/2" = 1"

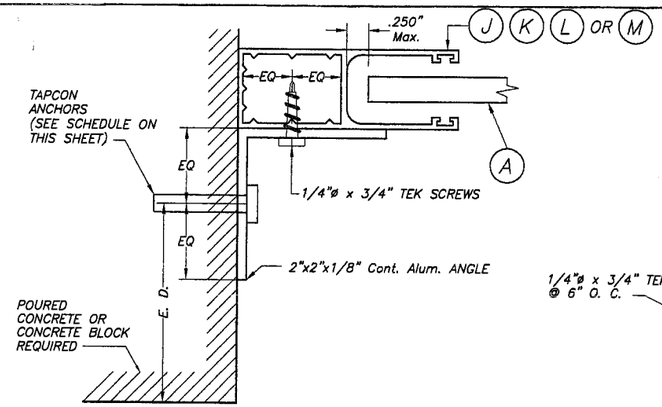

SECTION P – P (2) : SIDE WALL MOUNT

SCALE: 1/2" = 1"

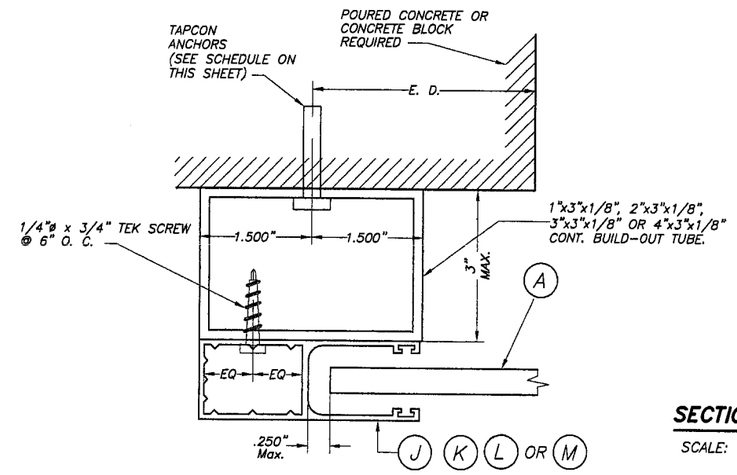

SECTION P – P (3) : BUILD-OUT MOUNT

SCALE: 1/2" = 1"

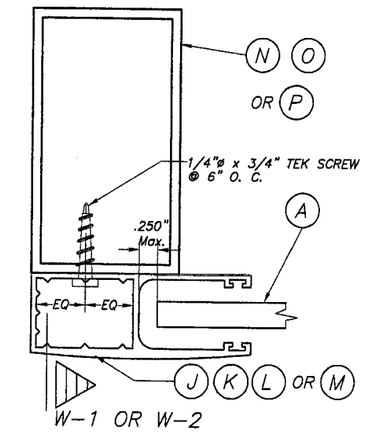

SECTION Q – Q : MULLION MOUNT (FACE MOUNT)

SCALE: 1/2" = 1"

SIDE RAIL ANCHOR SCHEDULE
MAXIMUM DESIGN PRESSURE RATING "W" (p. s. f.) AND CORRESPONDING MAXIMUM ANCHOR SPACING (in) * FOR SIDE RAILS (J), (K), (L) & (M) CONNECTION TO POURED CONCRETE OR MASONRY WALL

(USE MAXIMUM VALUES BETWEEN POSITIVE AND NEGATIVE LOAD)

MAXIMUM DESIGN LOAD "W" (p.s.f.)	SIDE RAIL (J)			SIDE RAIL (K)			SIDE RAIL (L)			SIDE RAIL (M)		
	WALL MOUNT	INSIDE MOUNT	BUILD-OUT MOUNT	WALL MOUNT	INSIDE MOUNT	BUILD-OUT MOUNT	WALL MOUNT	INSIDE MOUNT	BUILD-OUT MOUNT	WALL MOUNT	INSIDE MOUNT	BUILD-OUT MOUNT
80 OR LESS	5 1/2"	3 1/2"	6"	6"	4"	6"	5 1/2"	3 1/2"	6"	6"	4"	6"
	6"	6"	6"	6"	6"	6"	6"	6"	6"	6"	6"	6"
>80 TO 150	3"	N/A	5"	3"	N/A	6"	3"	N/A	5"	4"	N/A	5 1/2"
	6"	5 1/2"	6"	6"	6"	6"	6"	5 1/2"	6"	6"	6"	6"
>150 TO 195	N/A	N/A	4 1/2"	N/A	N/A	5"	N/A	N/A	4 1/2"	3"	N/A	5"
	6"	5"	6"	6"	5 1/2"	6"	6"	5"	6"	6"	5 1/2"	6"

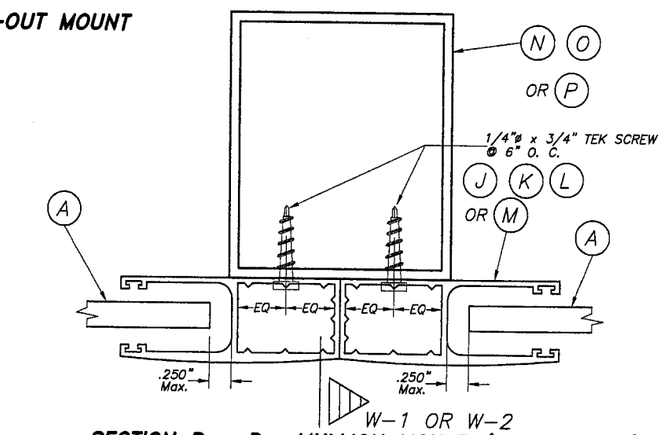

SECTION R – R : MULLION MOUNT (FACE MOUNT)

SCALE: 1/2" = 1"

CONCRETE BLOCK
POURED CONCRETE

SUBSTRATE LEGEND

* MAXIMUM ANCHOR SPACING (in.) AT SIDE RAILS VERSUS EDGE DISTANCE = E. D.

MAXIMUM ANCHOR SPACING ARE VALID FOR 3" EDGE DISTANCE.

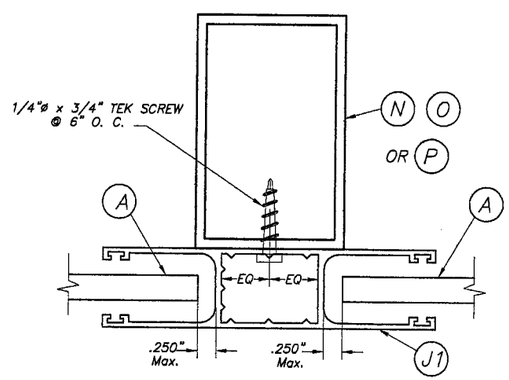

SECTION R – R (2) : MULLION MOUNT (FACE MOUNT)

SCALE: 1/2" = 1"

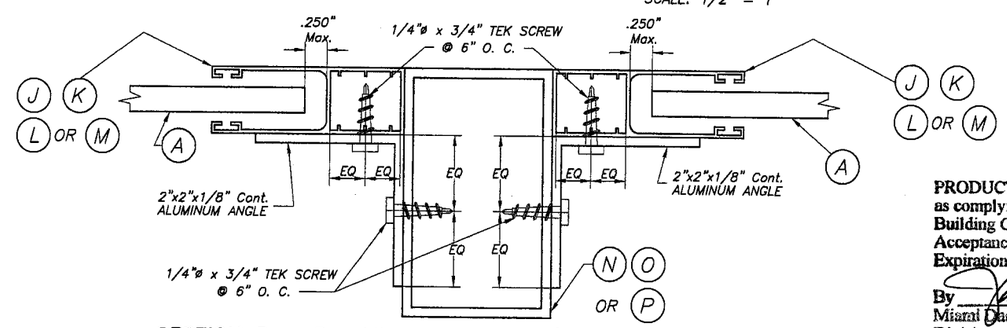

SECTION R – R : MULLION MOUNT (INSIDE MOUNT)

SCALE: 1/2" = 1"

PRODUCT REVISED
as complying with the Florida Building Code
Acceptance No 09-0527.06
Expiration Date June 07, 2014
By
Miami Dade Product Control Division

Florida Building Code (High Velocity Hurricane Zone)

JUN 01 2009

© 2009 TILTECO INC.

TILTECO INC.
TILLIT TESTING & ENGINEERING COMPANY
6355 N.W. 36th. St., Ste. 305, VIRGINIA GARDENS, Fl. 33166
Phone : (305)871-1530 . Fax : (305)871-1531
e-mail: tilteco@aol.com
EB-0006719
WALTER A. TILLIT Jr. P.E.
FLORIDA Lic. # 44167

60mm SLAT ROLL-UP SHUTTER

ROLLINGSHIELD, INC.
(N.S.A.# 1)
2500 N.W. 74th AVE.
MIAMI, FL. 33122
Phone : (305)436-6661 . Fax : (305)436-5523

REV. No	DESCRIPTION	DATE	REV. No	DESCRIPTION	DATE
1	OLD 05-218	4/3/09			
2					

DRAWN BY: L.G.
4/3/09 DATE
09-041 DRAWING No
SHEET 4 OF 16

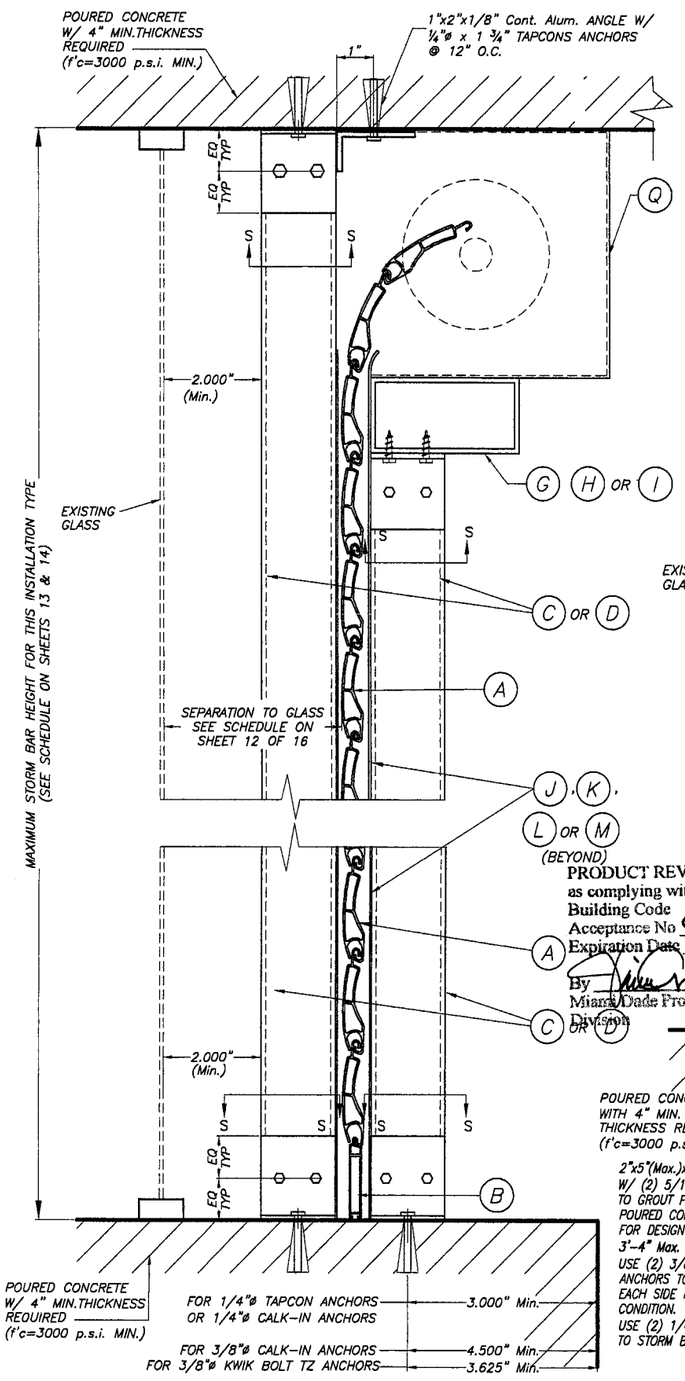

CEILING & FLOOR MOUNTING SECTION V-V(2) INSTALLATION W/ FIXED OR REMOVABLE STORM BARS W/CONCRETE ANCHORS

(SEE SECTION "S" FOR ANCHOR TYPE REQUIREMENT)

SCALE : 1/4" = 1"

SINGLE SPAN SECTIONS AND DETAILS ARE SIMILAR TO ABOVE SHOWN WITHOUT STORM BAR & HEADERS.

PRODUCT REVISED as complying with the Florida Building Code Acceptance No 09-0527.06 Expiration Date June 07, 2014 By Miami-Dade Product Control Division

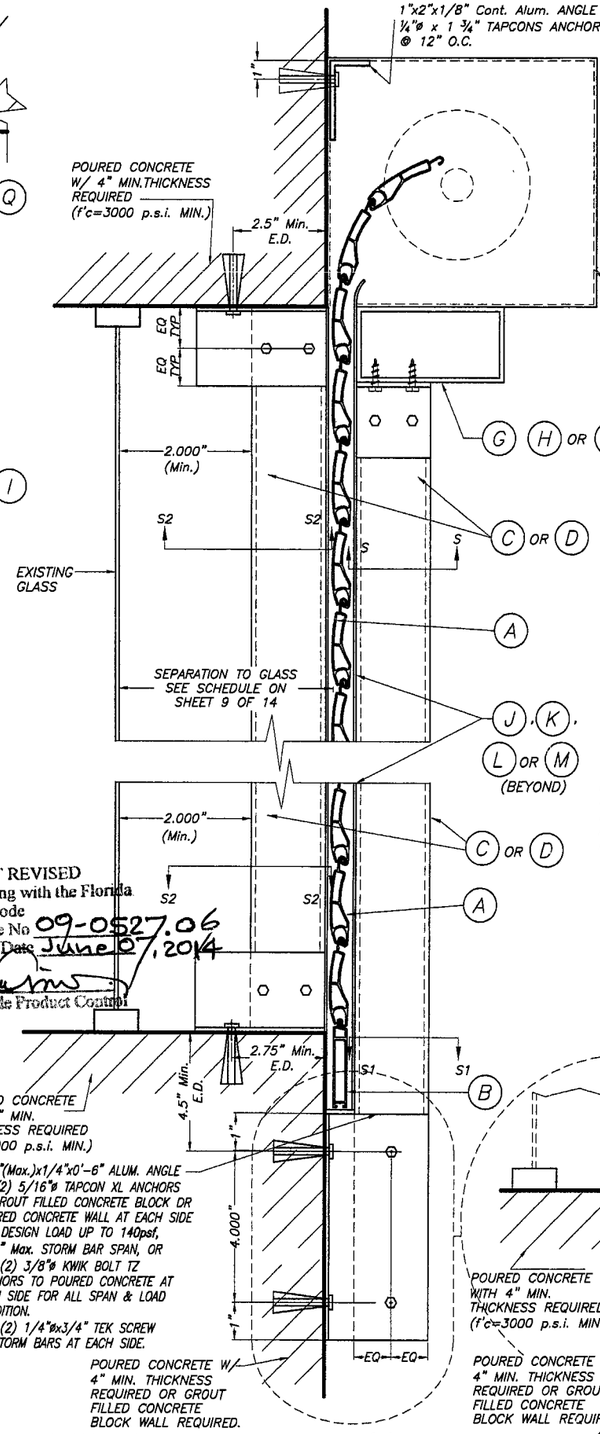

WALL MOUNTING SECTION V-V(1) INSTALLATION W/ FIXED STORM BARS W/ CONCRETE ANCHORS

SCALE : 1/4" = 1"

SECTION V - V

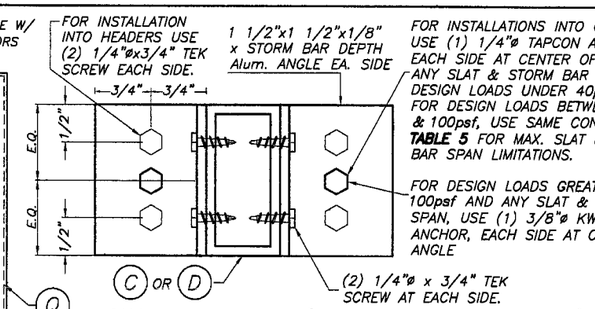

FOR INSTALLATIONS INTO CONCRETE, USE (1) 1/4"ø TAPCON ANCHOR, EACH SIDE AT CENTER OF ANGLE FOR ANY SLAT & STORM BAR SPAN & DESIGN LOADS UNDER 40psf.
FOR DESIGN LOADS BETWEEN 40psf & 100psf, USE SAME CONNECTION W/ **TABLE 5** FOR MAX. SLAT & STORM BAR SPAN LIMITATIONS.

FOR DESIGN LOADS GREATER THAN 100psf AND ANY SLAT & STORM BAR SPAN, USE (1) 3/8"ø KWIK BOLT TZ ANCHOR, EACH SIDE AT CENTER OF ANGLE

SECTION S - S (FOR FIXED STORM BAR)

SCALE : 1/2" = 1"

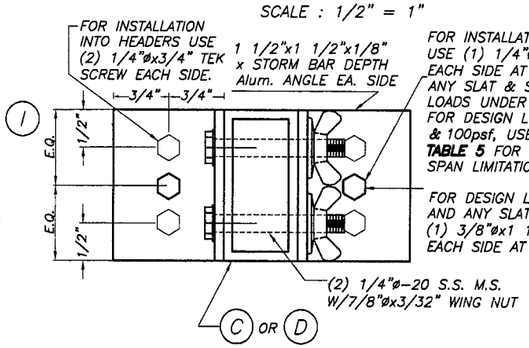

FOR INSTALLATIONS INTO CONCRETE, USE (1) 1/4"øx7/8" CALK-IN ANCHOR *, EACH SIDE AT CENTER OF ANGLE FOR ANY SLAT & STORM BAR SPAN & DESIGN LOADS UNDER 40psf.
FOR DESIGN LOADS BETWEEN 40psf & 100psf, USE SAME CONNECTION W/ **TABLE 5** FOR MAX. SLAT & STORM BAR SPAN LIMITATIONS.

FOR DESIGN LOADS GREATER THAN 100psf AND ANY SLAT & STORM BAR SPAN, USE (1) 3/8"øx1 1/4" CALK-IN ANCHOR *, EACH SIDE AT CENTER OF ANGLE

SECTION S - S (FOR REMOVABLE STORM BAR)

SCALE : 1/2" = 1"

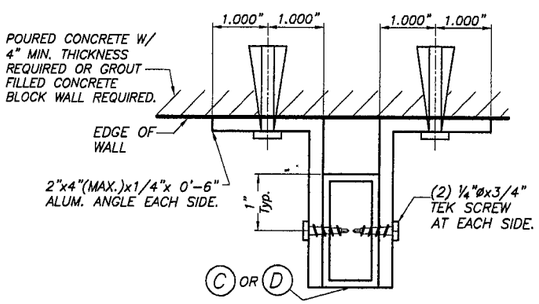

SECTION S1 - S1

SCALE : N. T. S.

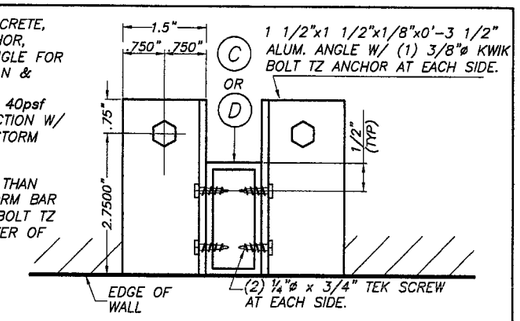

SECTION S2 - S2

SCALE : 1/4" = 1"

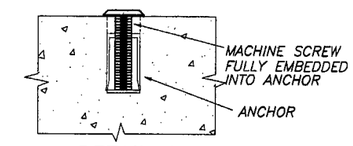

DETAIL A

N.T.S.

* 1/4" ø-20 OR 3/8" ø-16 MACHINE SCREWS USED JOINTLY W/ 1/4" ø x 7/8" OR 3/8" ø x 1 1/4" CALK-IN ANCHORS RESPECTIVELY SHALL BE LEFT TOGETHER W/ ANCHORS AT THE TIME STORM BARS ARE REMOVED. (SEE DET. A).

TABLE 5

DESIGN LOAD "W" (p.s.f.)	MAX. SLAT SPAN	"L" MAX. STORM BAR SPAN
40.0	3'-0"	8'-0"
	4'-0"	7'-9"
	5'-0"	6'-11"
	6'-0"	5'-9"
50.0	3'-0"	8'-0"
	4'-0"	6'-11"
	5'-0"	5'-6"
	6'-0"	4'-7"
60.0	3'-0"	7'-4"
	4'-0"	5'-9"
	5'-0"	4'-7"
80.0	3'-0"	5'-9"
	4'-0"	4'-4"
100.0	3'-0"	4'-7"
	4'-0"	3'-5"

OPTIONAL STORM BAR CONNECTION

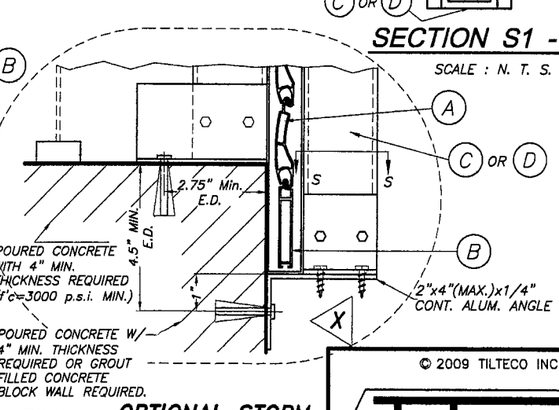

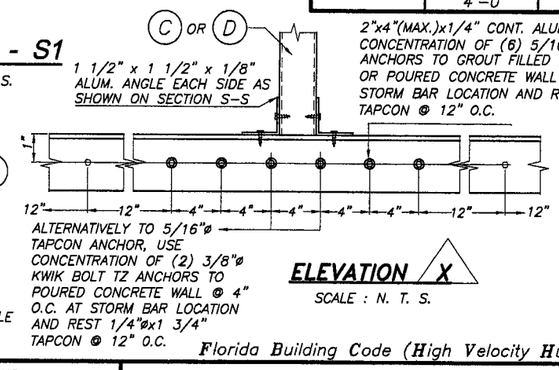

ELEVATION X

SCALE : N. T. S.

Florida Building Code (High Velocity Hurricane Zone)

JUN 01 2009

© 2009 TILTECO INC.

TILTECO INC.
TILLIT TESTING & ENGINEERING COMPANY
6355 N.W. 36th. St., Ste. 305, VIRGINIA GARDENS, Fl. 33166
Phone : (305)871-1530 . Fax : (305)871-1531
e-mail: tilteco@aol.com
EB-0006719
WALTER A. TILLIT Jr. P.E.
FLORIDA Lic. # 44167

60mm SLAT ROLL-UP SHUTTER

ROLLINGSHIELD, INC.
(N.S.A.# 1)
2500 N.W. 74th AVE.
MIAMI, FL. 33122
Phone : (305)436-6661 . Fax : (305)436-5523

REV. No	DESCRIPTION	DATE	REV. No	DESCRIPTION	DATE
1	OLD 05-218	4/3/09			
2					

DRAWN BY: L.G.
4/3/09 DATE
09-041 DRAWING No
SHEET 5 OF 16

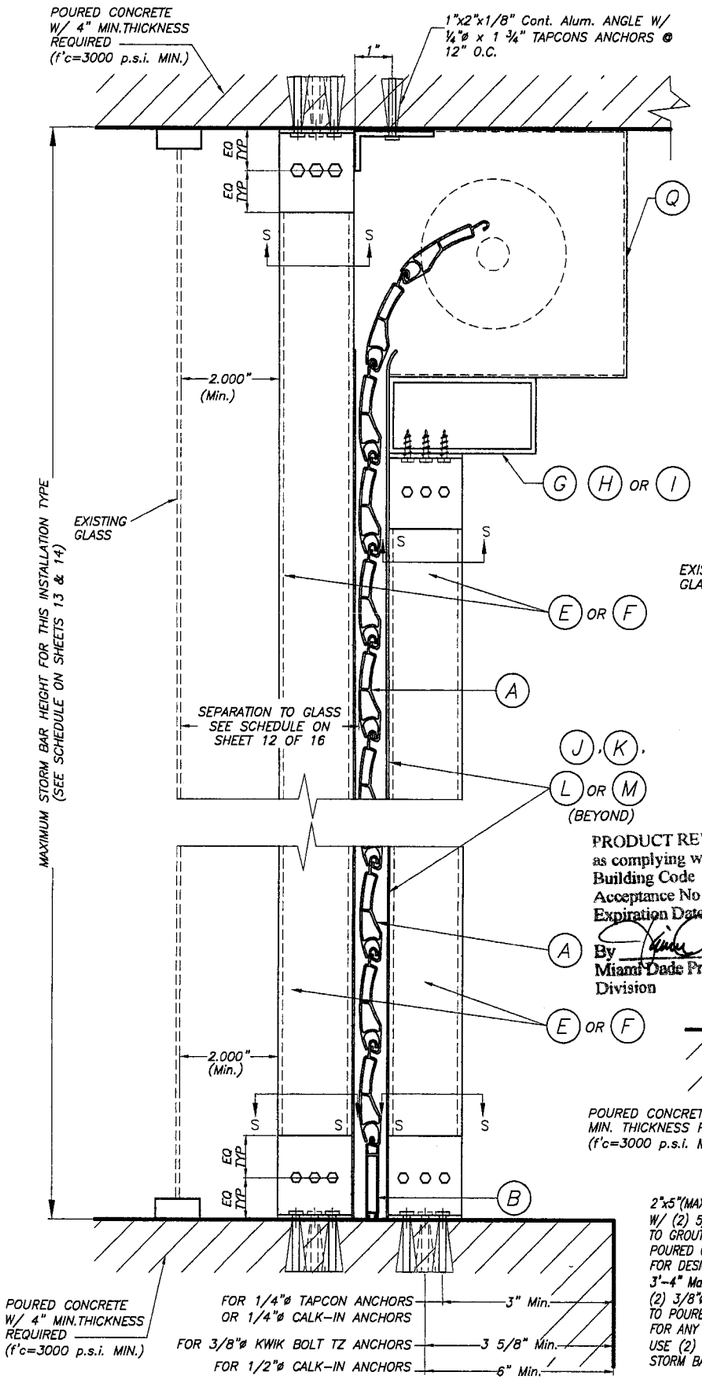

CEILING & FLOOR MOUNTING SECTION V-V(2) INSTALLATION W/ FIXED OR REMOVABLE STORM BARS W/CONCRETE ANCHORS

(SEE SECTION "S" FOR ANCHOR TYPE REQUIREMENT)

SCALE : N.T.S.

SINGLE SPAN SECTIONS AND DETAILS ARE SIMILAR TO ABOVE SHOWN WITHOUT STORM BAR & HEADERS.

SECTION V - V

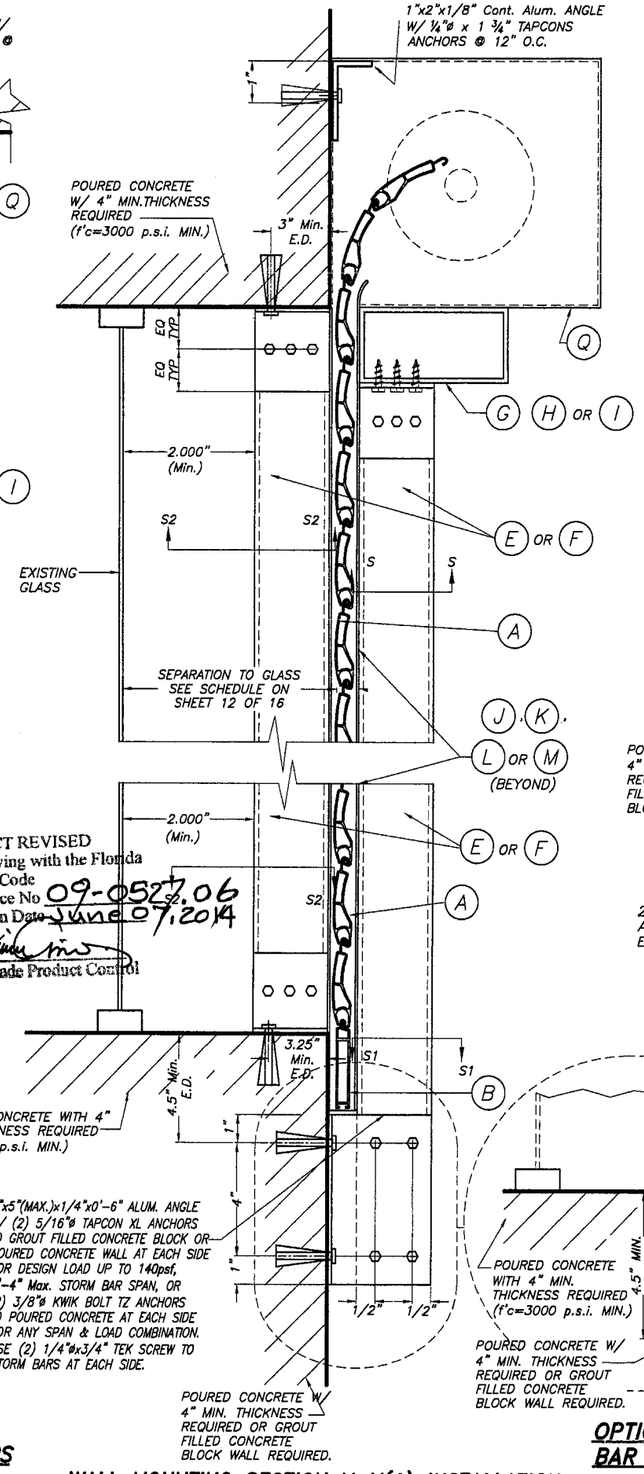

WALL MOUNTING SECTION V-V(1) INSTALLATION W/ FIXED STORM BARS W/CONCRETE ANCHORS

SCALE : N.T.S.

PRODUCT REVISED
as complying with the Florida Building Code
Acceptance No 09-0527.06
Expiration Date June 07, 2014
By
Miami-Dade Product Control Division

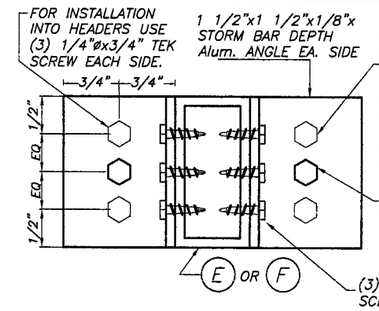

SECTION S - S (FOR FIXED STORM BAR)

SCALE : N.T.S.

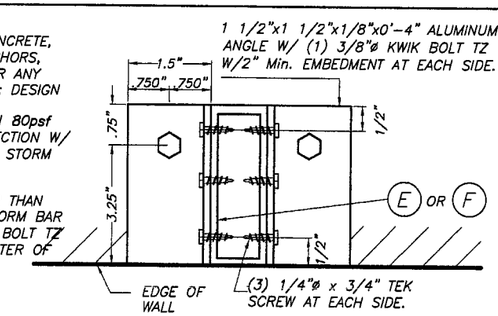

SECTION S2 - S2

SCALE : N.T.S.

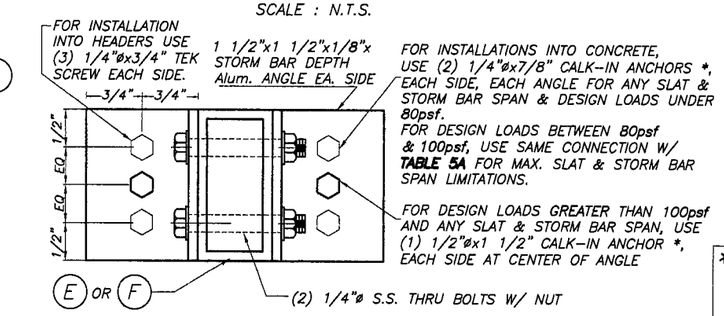

SECTION S - S (FOR REMOVABLE STORM BAR)

SCALE : N.T.S.

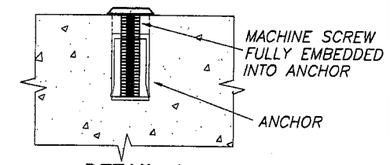

DETAIL A

SCALE : 1/2" = 1"

* 1/4"ø-20 OR 1/2"ø-13 MACHINE SCREWS USED JOINTLY W/ 1/4"øx7/8" OR 1/2"øx1 1/2" CALK-IN ANCHORS RESPECTIVELY SHALL BE LEFT TOGETHER W/ ANCHORS AT THE TIME STORM BARS ARE REMOVED. (SEE DET. A).

TABLE 5A

DESIGN LOAD "W" (p.s.f.)	MAX. SLAT SPAN	"L" MAX. STORM BAR SPAN
80.0	3'-0"	9'-11"
	4'-0"	8'-8"
	5'-0"	6'-11"
100.0	3'-0"	9'-2"
	4'-0"	6'-11"
	5'-0"	5'-6"

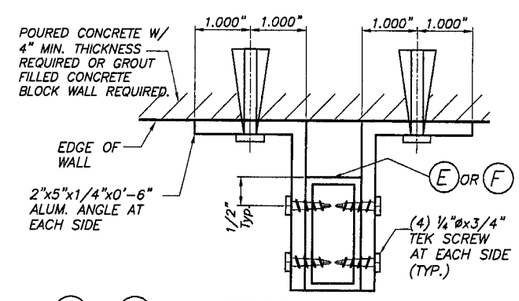

SECTION S1 - S1

SCALE : N. T. S.

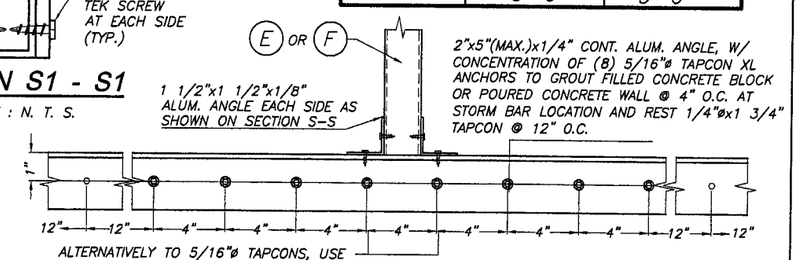

ELEVATION X

SCALE : N. T. S.

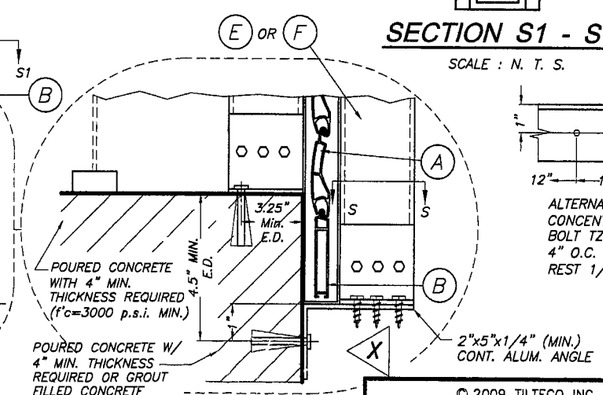

OPTIONAL STORM BAR CONNECTION

Florida Building Code (High Velocity Hurricane Zone)

© 2009 TILTECO INC.

TILTECO INC.
TILLIT TESTING & ENGINEERING COMPANY
6355 N.W. 36th. St., Ste. 305, VIRGINIA GARDENS, Fl. 33166
Phone : (305)871-1530 . Fax : (305)871-1531
e-mail: tilteco@aol.com
EB-0006719
WALTER A. TILLIT Jr. P.E.
FLORIDA Lic. # 44167

60mm SLAT ROLL-UP SHUTTER

ROLLINGSHIELD, INC.
(N.S.A.# 1)
2500 N.W. 74th AVE.
MIAMI, FL. 33122
Phone : (305)436-6661 . Fax : (305)436-5523

REV. No	DESCRIPTION	DATE	REV. No	DESCRIPTION	DATE
1	OLD 05-218	4/3/09			
2					

DRAWN BY: L.G.
4/3/09 DATE
09-041 DRAWING No
SHEET 5A OF 16

JUN 01 2009

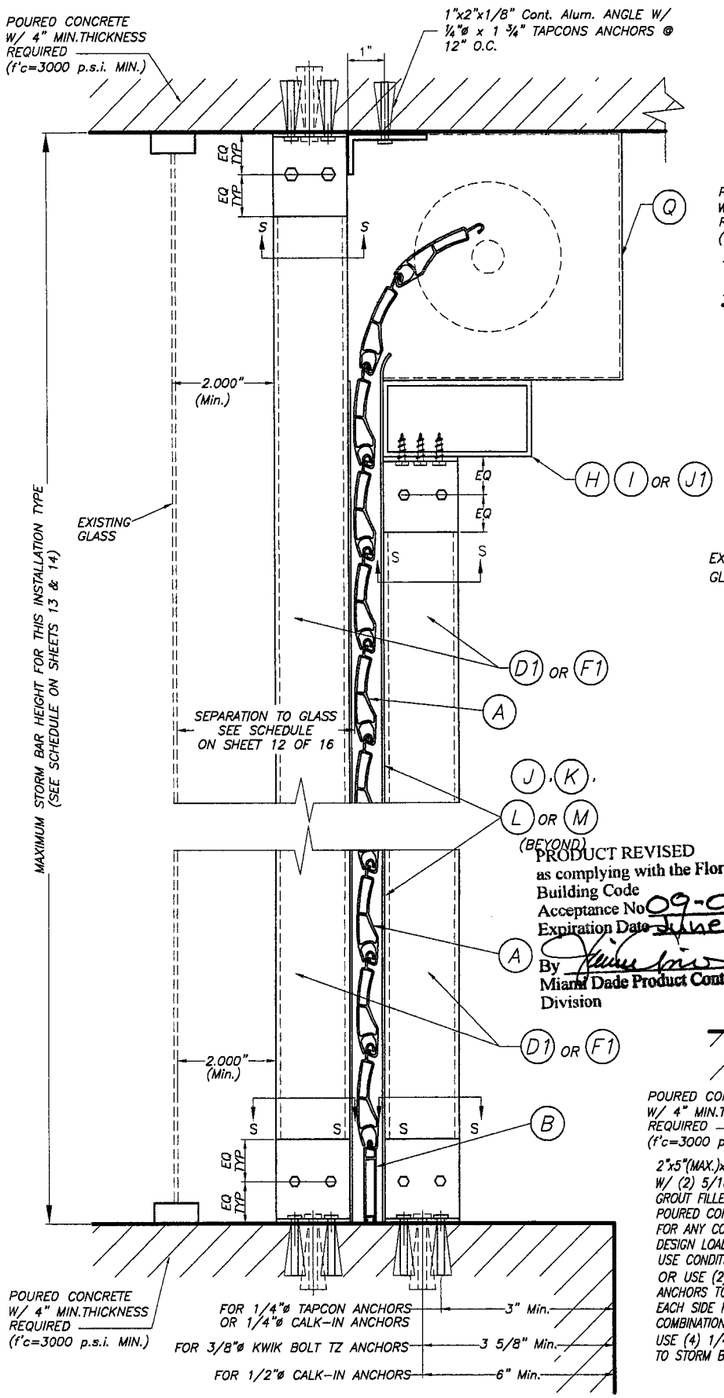

PRODUCT REVISED
as complying with the Florida Building Code
Acceptance No 09-0527.06
Expiration Date June 07/2014
By
Miami Dade Product Control Division

CEILING & FLOOR MOUNTING SECTION V-V(2) INSTALLATION W/ FIXED OR REMOVABLE STORM BARS W/CONCRETE ANCHORS

(SEE SECTION "S" FOR ANCHOR TYPE REQUIREMENT)

SCALE : N.T.S.

SINGLE SPAN SECTIONS AND DETAILS ARE SIMILAR TO ABOVE SHOWN WITHOUT STORM BAR & HEADERS.

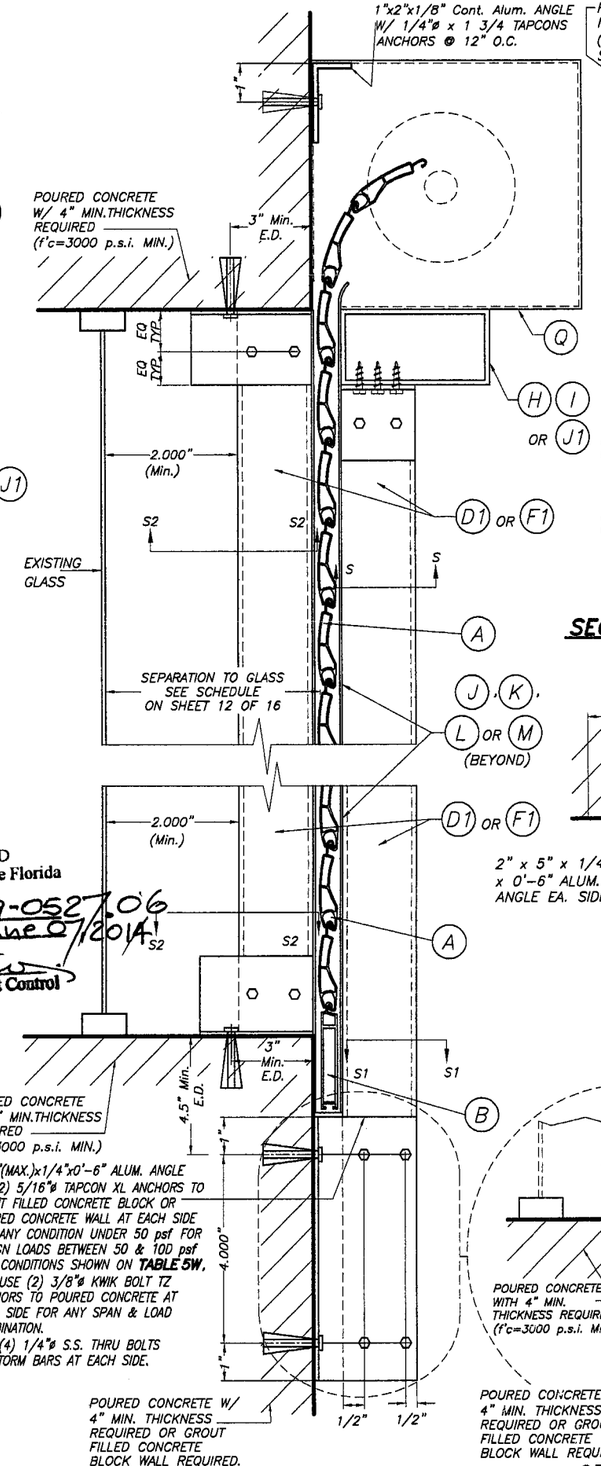

WALL MOUNTING SECTION V-V(1) INSTALLATION W/ FIXED STORM BARS W/ CONCRETE ANCHORS

SCALE : N.T.S.

SECTION V - V

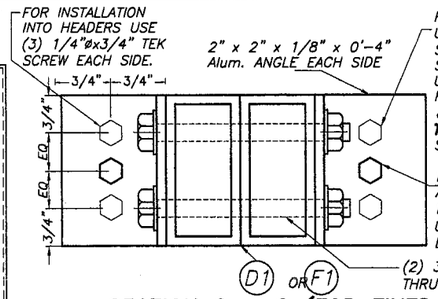

FOR INSTALLATIONS INTO CONCRETE, USE (2) 1/4"ø TAPCON ANCHORS, EACH SIDE, EACH ANGLE FOR ANY SLAT & STORM BAR SPAN & DESIGN LOADS UNDER 50psf.
FOR DESIGN LOADS BETWEEN 50psf & 100psf, USE SAME CONNECTION W/ **TABLE 5B** FOR MAX. SLAT & STORM BAR SPAN LIMITATIONS.
FOR DESIGN LOADS GREATER THAN 100psf AND ANY SLAT & STORM BAR D1 SPAN, EXCEPT STORM BAR F1 7'-8" Max. SPAN, USE (1) 3/8"ø KWIK BOLT TZ ANCHOR, EACH SIDE AT CENTER OF ANGLE

SECTION S - S (FOR FIXED STORM BAR)

SCALE : N.T.S.

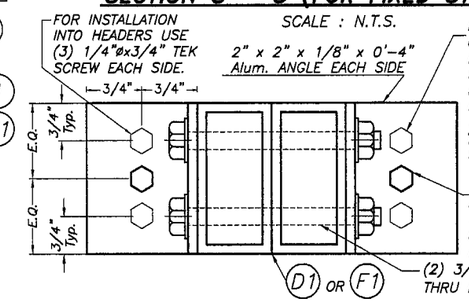

FOR INSTALLATIONS INTO CONCRETE, USE (2) 1/4"øx7/8" CALK-IN ANCHOR *, EACH SIDE, EACH ANGLE FOR ANY SLAT & STORM BAR SPAN & DESIGN LOADS UNDER 50psf.
FOR DESIGN LOADS BETWEEN 50psf & 100psf, USE SAME CONNECTION W/ **TABLE 5B** FOR MAX. SLAT & STORM BAR SPAN LIMITATIONS.
FOR DESIGN LOADS GREATER THAN 100psf AND ANY SLAT & STORM BAR D1 SPAN, EXCEPT STORM BAR F1 5'-10" Max. SPAN, USE (1) 1/2"øx1 1/2" CALK-IN ANCHOR *, EACH SIDE AT CENTER OF ANGLE

SECTION S - S (FOR REMOVABLE STORM BAR)

SCALE : N.T.S.

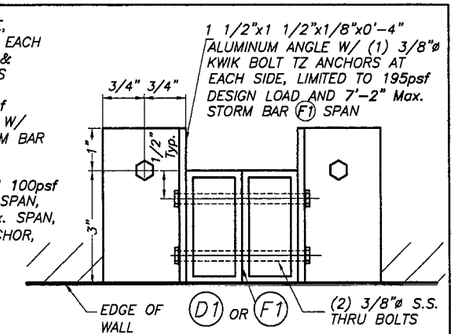

SECTION S2 - S2

SCALE : N.T.S.

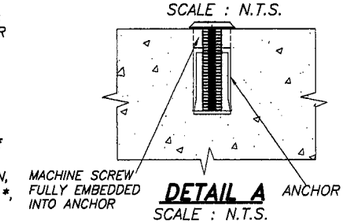

DETAIL A

SCALE : N.T.S.

*1/4"ø-20 OR 1/2"ø-13 MACHINE SCREWS USED JOINTLY W/ 1/4"øx7/8" OR 1/2"øx1 1/2" CALK-IN ANCHORS RESPECTIVELY SHALL BE LEFT TOGETHER W/ ANCHORS AT THE TIME STORM BARS ARE REMOVED. (SEE DET. A).

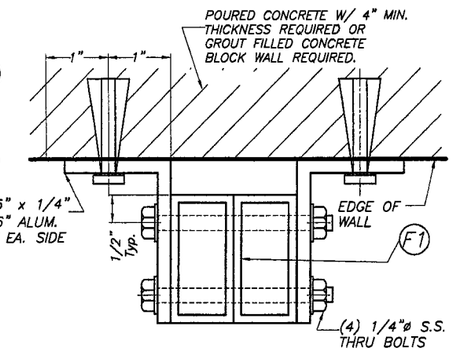

SECTION S1 - S1

SCALE : N.T.S.

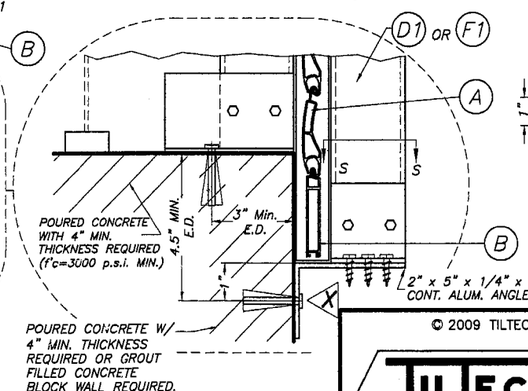

OPTIONAL STORM BAR CONNECTION

SCALE : N.T.S.

JUN 01 2009

TABLE 5W

DESIGN LOAD "W" (p.s.f.)	MAX. SLAT SPAN	"L" MAX. STORM BAR SPAN
50.0	3'-0"	13'-4"
	4'-0"	10'-5"
	5'-0"	8'-4"
	6'-0"	6'-11"
60.0	3'-0"	11'-7"
	4'-0"	8'-8"
	5'-0"	6'-11"
80.0	3'-0"	8'-8"
	4'-0"	6'-6"
	5'-0"	5'-2"
100.0	3'-0"	6'-11"
	4'-0"	5'-2"
	5'-0"	4'-2"

TABLE 5B

DESIGN LOAD "W" (p.s.f.)	MAX. SLAT SPAN	"L" MAX. STORM BAR SPAN
50.0	3'-0"	13'-4"
	4'-0"	12'-5"
	5'-0"	11'-1"
	6'-0"	9'-3"
60.0	3'-0"	12'-9"
	4'-0"	11'-7"
	5'-0"	9'-3"
80.0	3'-0"	11'-6"
	4'-0"	8'-8"
	5'-0"	6'-11"
100.0	3'-0"	9'-2"
	4'-0"	6'-11"
	5'-0"	5'-6"

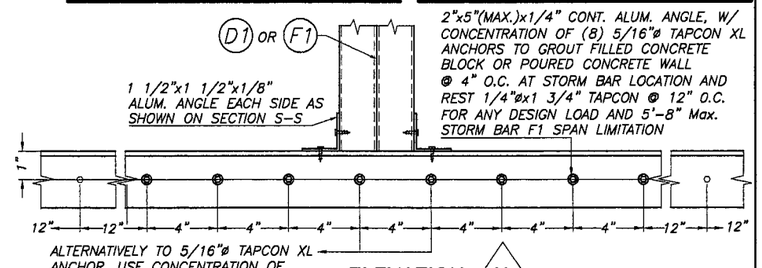

ELEVATION X

SCALE : N. T. S.

Florida Building Code (High Velocity Hurricane Zone)

© 2009 TILTECO INC.

TILTECO INC.
TILLIT TESTING & ENGINEERING COMPANY
6355 N.W. 36th. St., Ste. 305, VIRGINIA GARDENS, FL. 33166
Phone : (305)871-1530 . Fax : (305)871-1531
e-mail: tilteco@aol.com
EB-0006719
WALTER A. TILLIT Jr. P.E.
FLORIDA Lic. # 44167

60mm SLAT ROLL-UP SHUTTER

ROLLINGSHIELD, INC.
(N.S.A.# 1)
2500 N.W. 74th AVE.
MIAMI, FL. 33122
Phone : (305)436-6661 . Fax : (305)436-5523

REV. No	DESCRIPTION	DATE	REV. No	DESCRIPTION	DATE
1	OLD 05-218	4/3/09			
2					

DRAWN BY: L.G.
4/3/09 DATE
09-041 DRAWING No
SHEET 5B OF 16

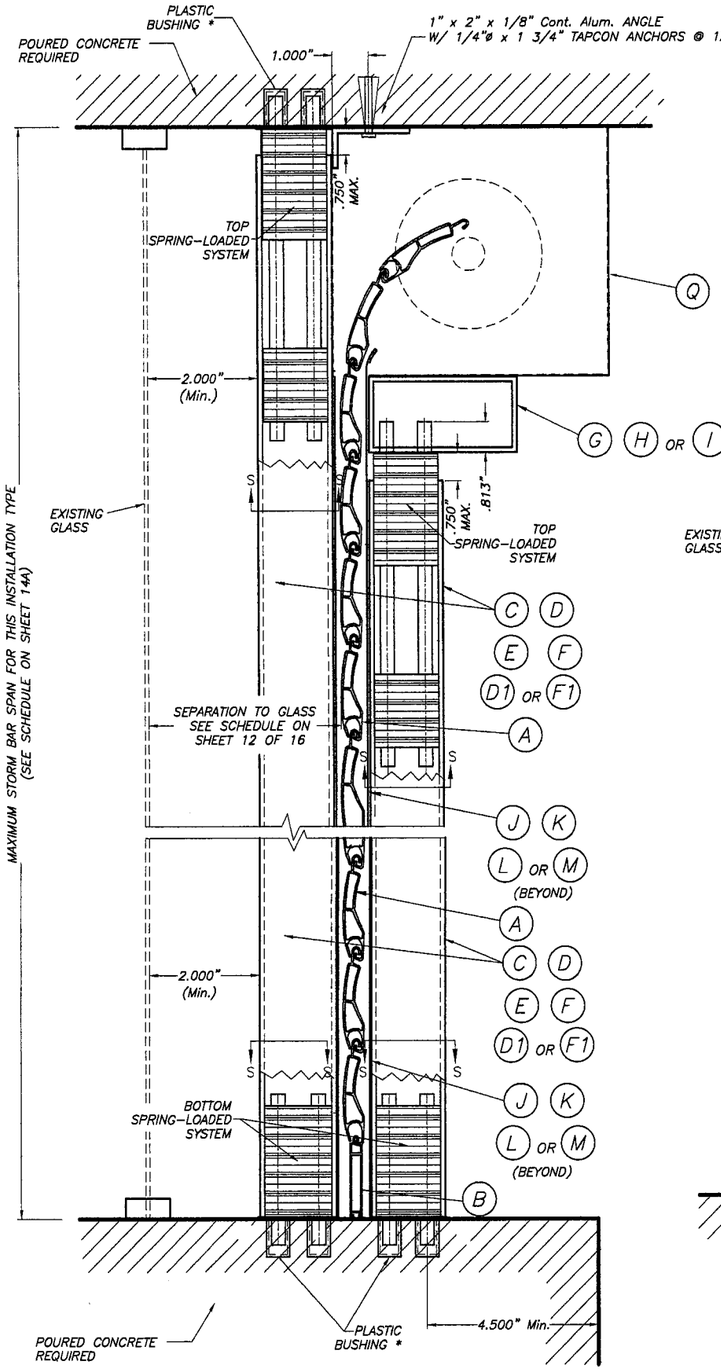

CEILING & FLOOR MOUNTING SECTION V-V(2) INSTALLATION W/ REMOVABLE STORM BARS W/SPRING-LOADED SYSTEM *

SCALE : 1/4" = 1"

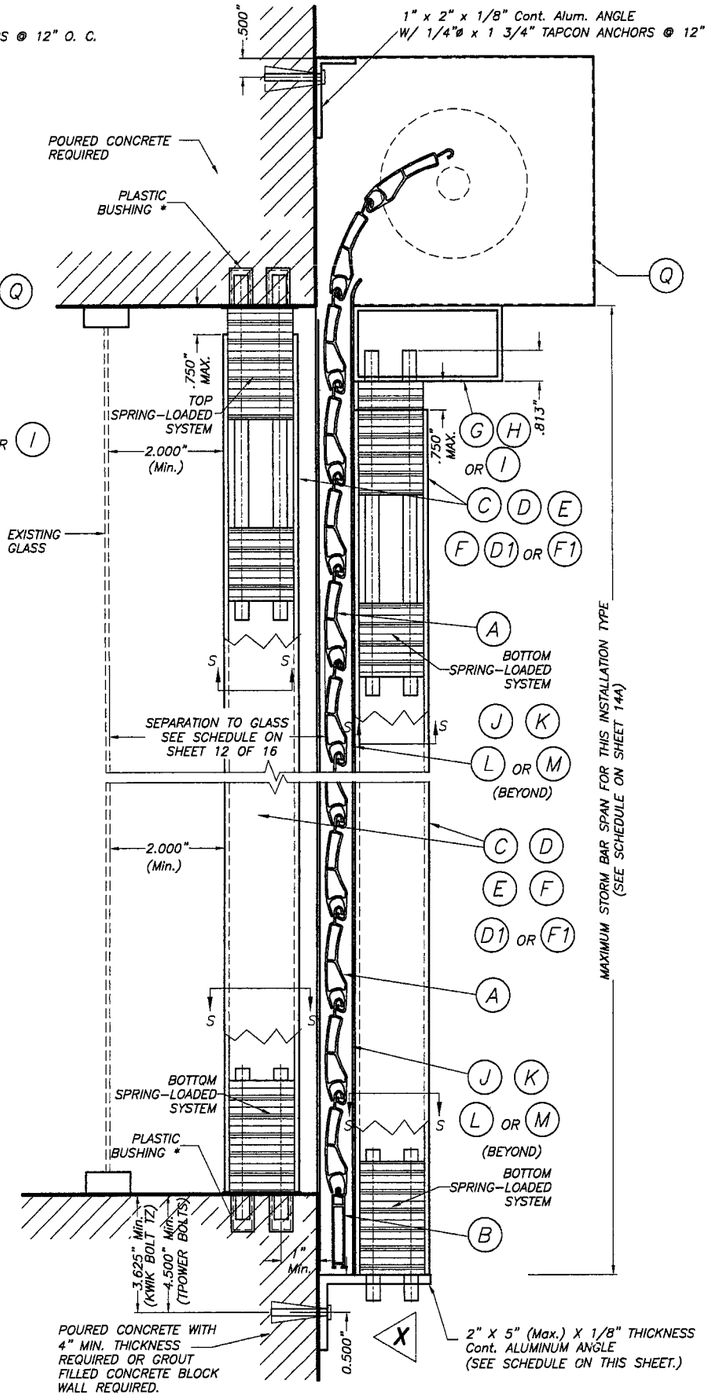

WALL MOUNTING SECTION V-V(1) INSTALLATION W/ REMOVABLE STORM BARS W/SPRING-LOADED SYSTEM *

SCALE : 1/4" = 1"

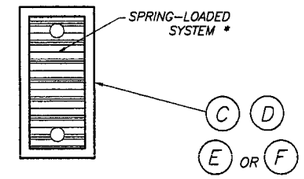

SECTION S - S : SINGLE STORM BAR

SCALE : 1/2" = 1"

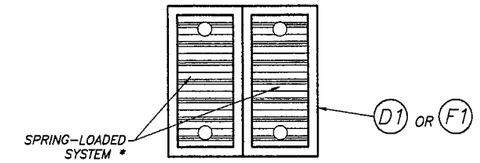

SECTION S - S : DOUBLE STORM BAR

SCALE : 1/2" = 1"

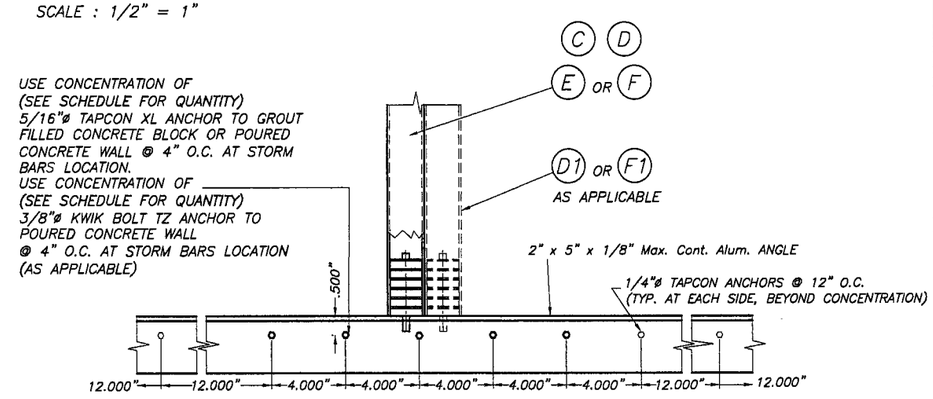

ELEVATION X

SCALE : 1/8" = 1"

ANCHOR & ANGLE SCHEDULE FOR ELEVATION X			
DESIGN LOAD (psf)	ANCHOR TYPE & QUANTITY	ANGLE THICKNESS	SUBSTRATE
75.0 OR LESS **	(5) 5/16" ø TAPCON XL	1/8"	CONCRETE BLOCK OR POURED CONCRETE
75.0 OR LESS ***	(2) 3/8" ø KWIK BOLT TZ	1/8"	POURED CONCRETE

** W/ 4'-0" Max. SLAT SPAN & 8'-0" MAX. STORM BAR SPAN

*** W/ 4'-0" Max. SLAT SPAN & 8'-0" MAX. STORM BAR SPAN

PRODUCT REVISED
as complying with the Florida Building Code
Acceptance No 09-0527.06
Expiration Date June 03/2014
By
Miami Dade Product Control Division

Florida Building Code (High Velocity Hurricane Zone)

SECTIONS V - V

* SEE SHEET 9 OF 16 FOR SPECS. & DETAILS.

JUN 01 2009

© 2009 TILTECO INC.

TILTECO INC.
TILLIT TESTING & ENGINEERING COMPANY
6355 N.W. 36th. St., Ste. 305, VIRGINIA GARDENS, Fl. 33166
Phone : (305)871-1530 . Fax : (305)871-1531
e-mail: tilteco@aol.com
EB-0006719
WALTER A. TILLIT Jr. P.E.
FLORIDA Lic. # 44167

60mm SLAT ROLL-UP SHUTTER

ROLLINGSHIELD, INC.
(N.S.A.# 1)
2500 N.W. 74th AVE.
MIAMI, FL. 33122
Phone : (305)436-8861 . Fax : (305)436-5523

REV. No	DESCRIPTION	DATE	REV. No	DESCRIPTION	DATE
1	OLD 05-218	4/3/09			
2					

DRAWN BY: L.G.
4/3/09 DATE
09-041 DRAWING No
SHEET 6 OF 16

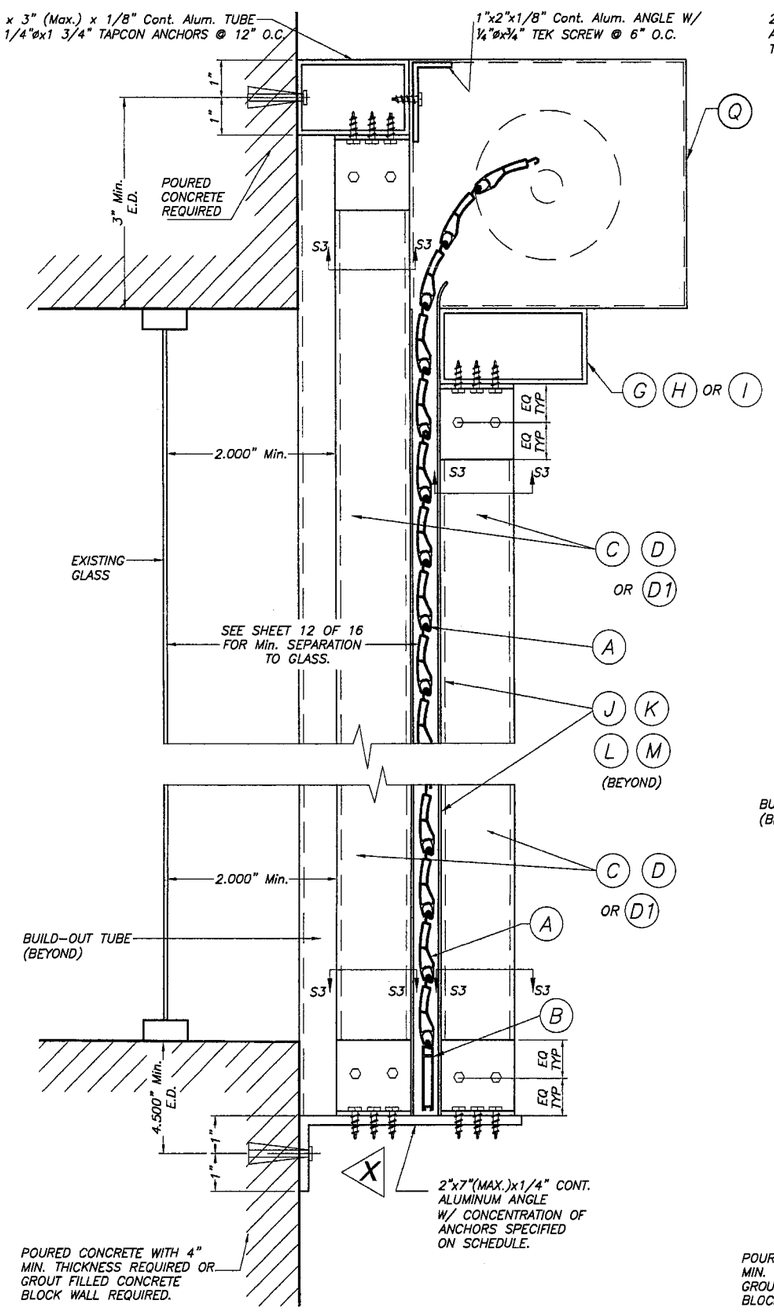

CASE I

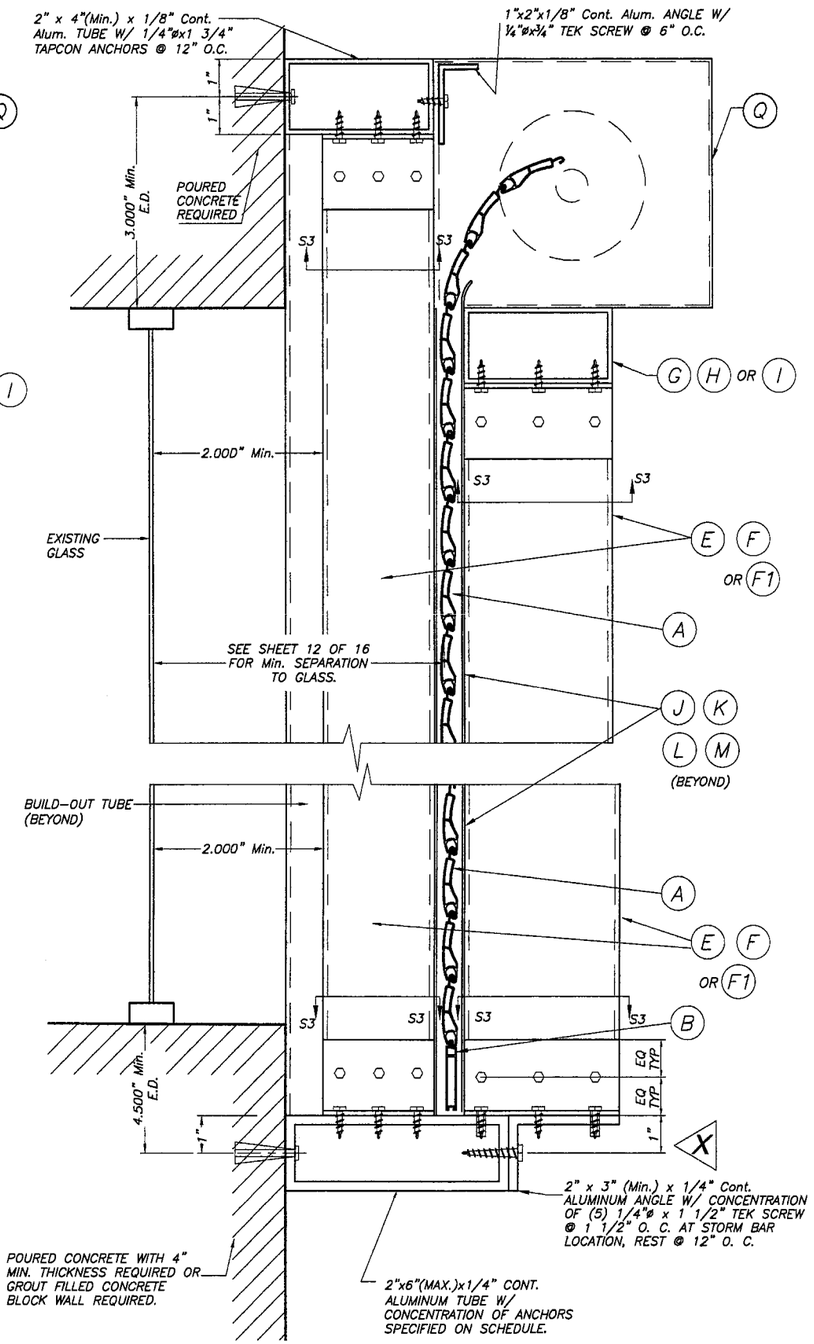

CASE II

FIXED STORM BAR CONNECTION AT BUILD-OUT INSTALLATIONS W/SHEET METAL SCREWS OR MACHINE SCREWS

SCALE : 1/4" = 1"

NOTE:
SINGLE SPAN SECTIONS AND DETAILS ARE SIMILAR TO ABOVE SHOWN WITHOUT STORM BAR & HEADERS.

SECTION V – V(3)

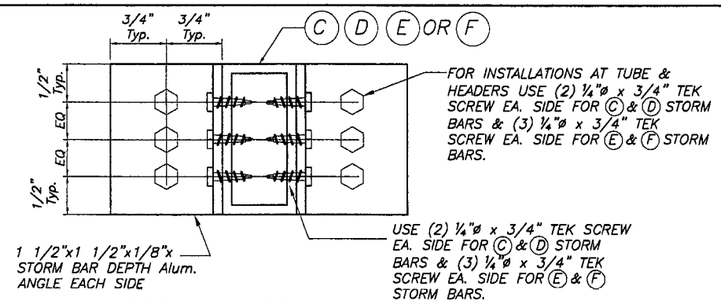

SECTION S3 – S3

SCALE : 1/2" = 1"

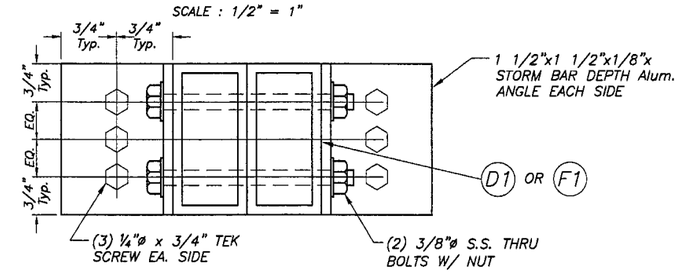

SECTION S3 – S3

SCALE : 1/2" = 1"

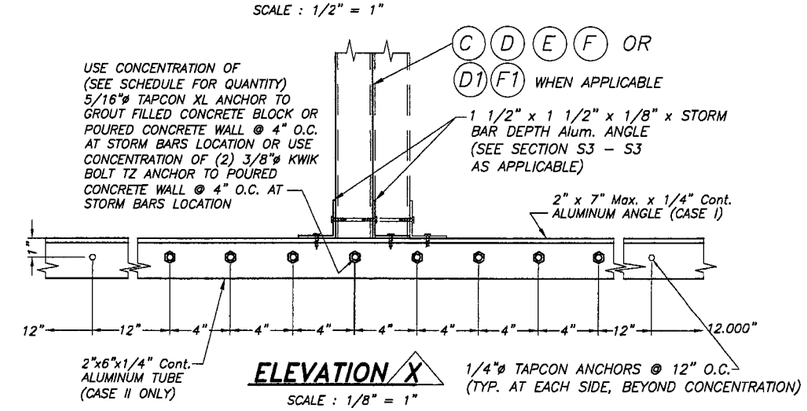

ELEVATION X

SCALE : 1/8" = 1"

ANCHORS & STORM BARS SCHEDULE FOR ELEVATION X

ANCHOR TYPE & QUANTITY	STORM BAR TYPE
(6) 5/16" ø TAPCON XL	C, D
(8) 5/16" ø TAPCON XL	E, F
(8) 5/16" ø TAPCON XL	D1, F1 *

* LIMITED TO 195psf, 3'-1" SPACING & 7'-0" MAX. SPAN STORM BAR F1

PRODUCT REVISED
as complying with the Florida Building Code
Acceptance No 09-0527.06
Expiration Date June 07/2014
By
Miami-Dade Product Control Division

Florida Building Code (High Velocity Hurricane Zone)

© 2009 TILTECO INC.

TILTECO INC.
TILLIT TESTING & ENGINEERING COMPANY
6355 N.W. 36th. St., Ste. 305, VIRGINIA GARDENS, Fl. 33166
Phone : (305)871-1530 . Fax : (305)871-1531
e-mail: tilteco@aol.com
EB-0006719
WALTER A. TILLIT Jr. P.E.
FLORIDA Lic. # 44167

JUN 01 2009

60mm SLAT ROLL-UP SHUTTER

ROLLINGSHIELD, INC.
(N.S.A.# 1)
2500 N.W. 74th AVE.
MIAMI, FL. 33122
Phone : (305)436-6661 . Fax : (305)436-5523

REV. No	DESCRIPTION	DATE	REV. No	DESCRIPTION	DATE
1	OLD 05-218	4/3/09			
2					

DRAWN BY: L.G.
4/3/09 DATE
09-041 DRAWING No
SHEET 7 OF 16

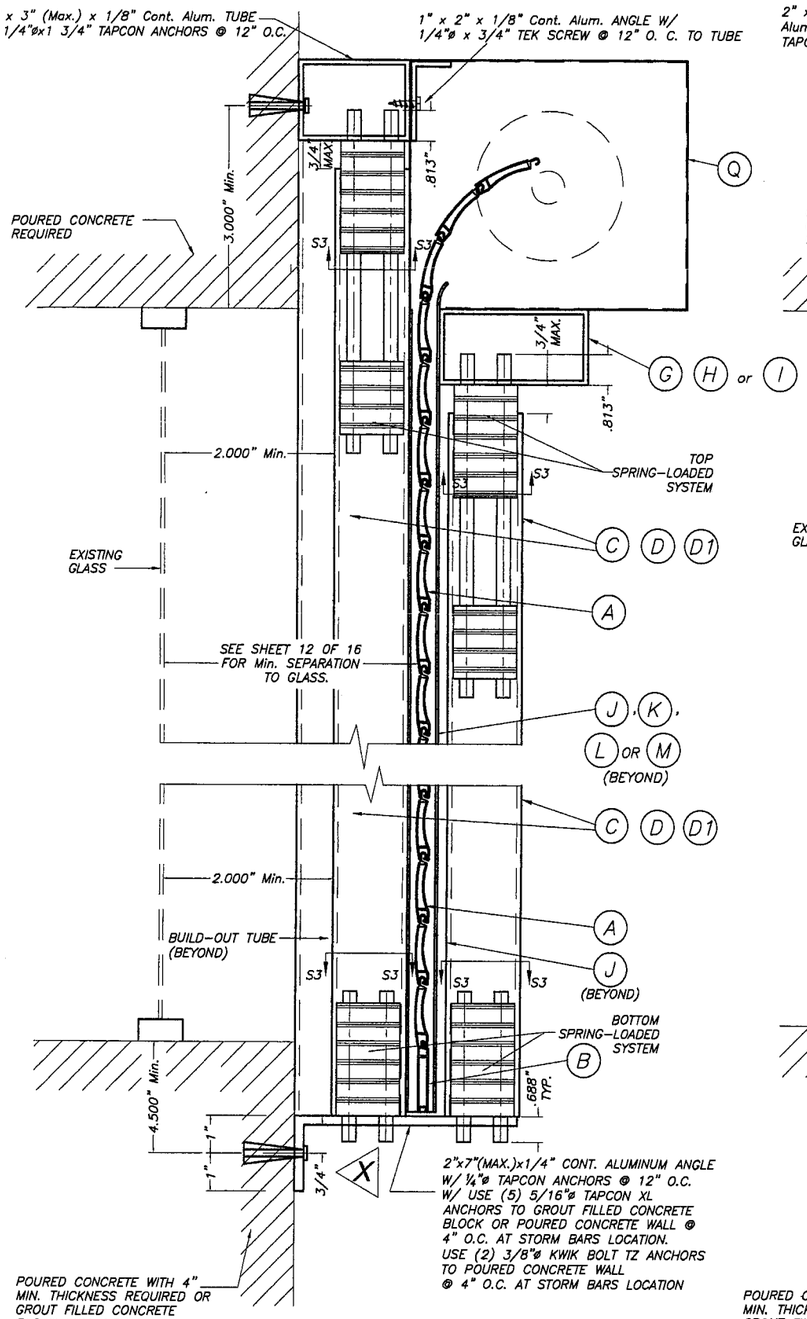

CASE I

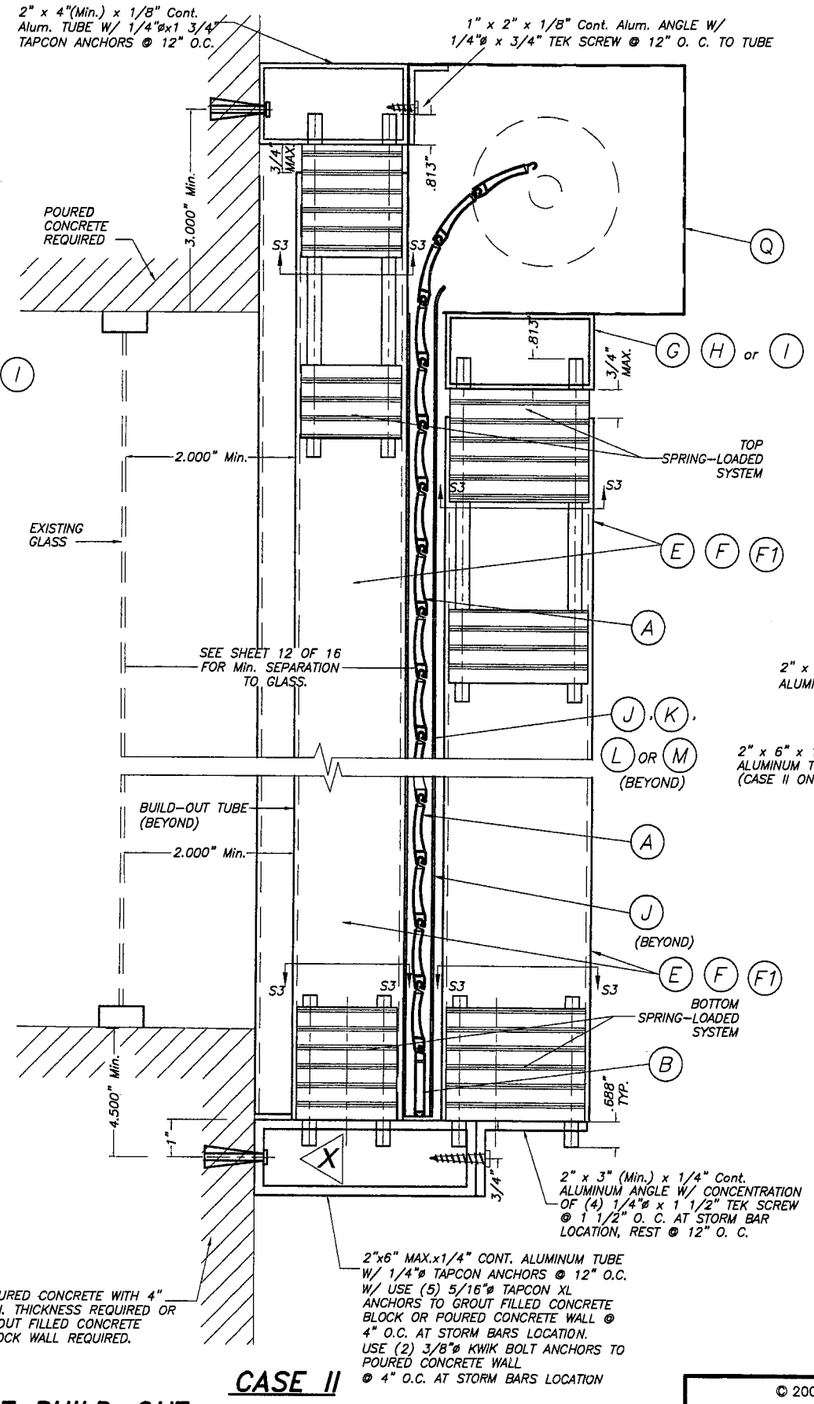

CASE II

REMOVABLE STORM BAR CONNECTION AT BUILD-OUT INSTALLATIONS W/SPRING-LOADED SYSTEM *

SCALE : 1/4" = 1"

SECTION V – V(3)

* SEE SHEET 9 OF 16 FOR SPECS. & DETAILS.

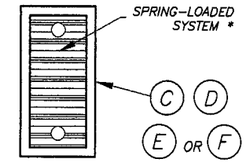

SECTION S3 – S3 : SINGLE STORM BAR

SCALE : 1/2" = 1"

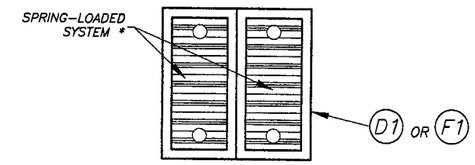

SECTION S3 – S3 : DOUBLE STORM BAR

SCALE : 1/2" = 1"

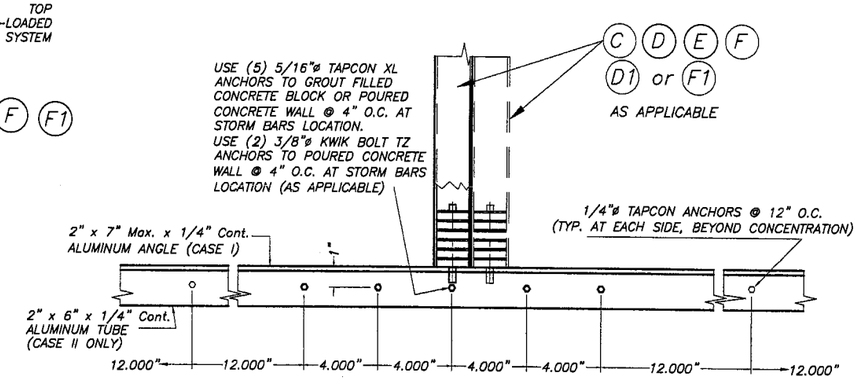

ELEVATION X

SCALE : 1/8" = 1"

PRODUCT REVISED
as complying with the Florida Building Code
Acceptance No 09-0527.06
Expiration Date June 07, 2014
By
Miami Dade Product Control Division

Florida Building Code (High Velocity Hurricane Zone)

© 2009 TILTECO INC.

TILTECO INC.
TILLIT TESTING & ENGINEERING COMPANY
6355 N.W. 36th. St., Ste. 305, VIRGINIA GARDENS, Fl. 33166
Phone : (305)871-1530 . Fax : (305)871-1531
e-mail: tilteco@aol.com
EB-0006719
WALTER A. TILLIT Jr. P.E.
FLORIDA Lic. # 44167

JUN 01 2009

60mm SLAT ROLL-UP SHUTTER

ROLLINGSHIELD, INC.
(N.S.A.# 1)
2500 N.W. 74th AVE.
MIAMI, FL. 33122
Phone : (305)436-6661 . Fax : (305)436-5523

REV. No	DESCRIPTION	DATE	REV. No	DESCRIPTION	DATE
1	OLD 05-218	4/3/09			
2					

DRAWN BY: L.G.
4/3/09 DATE
09-041 DRAWING No
SHEET 8 OF 16

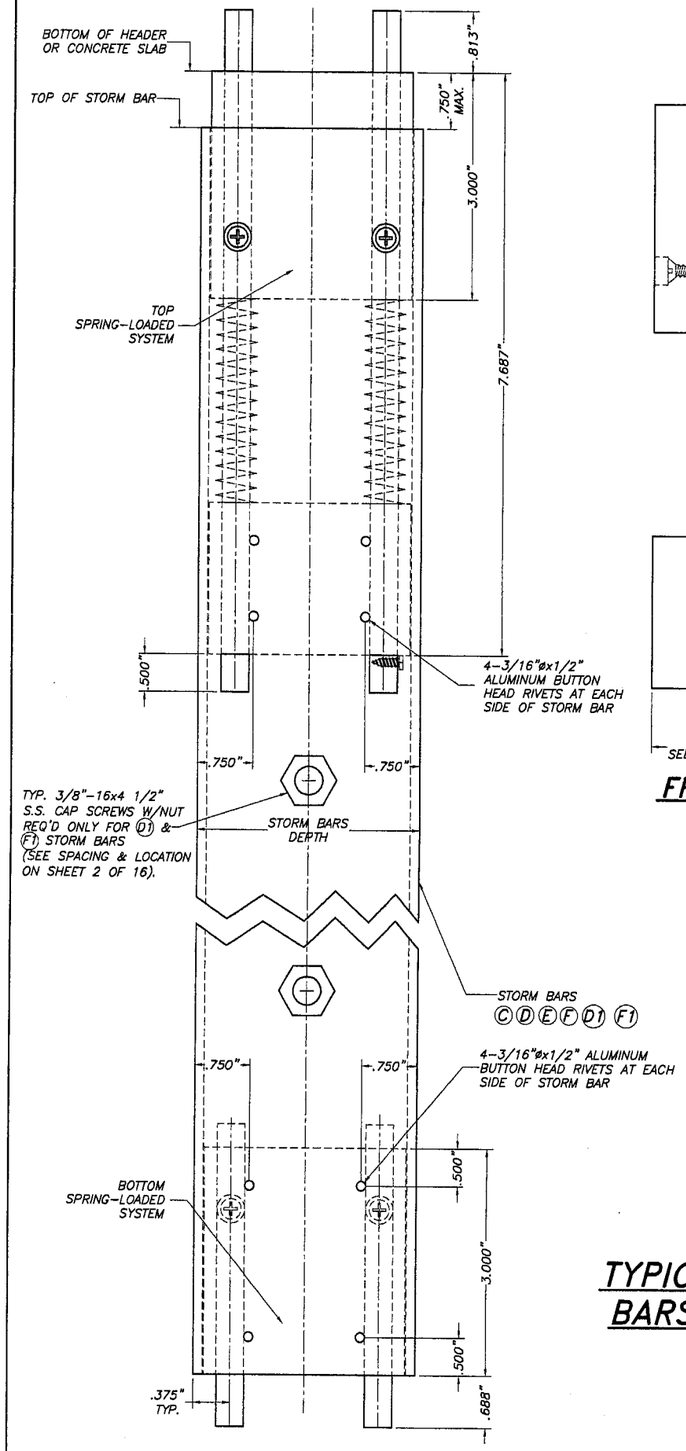

TYPICAL CONNECTION TO STORM BARS (SIDE VIEW)

SCALE: 1/2" = 1"

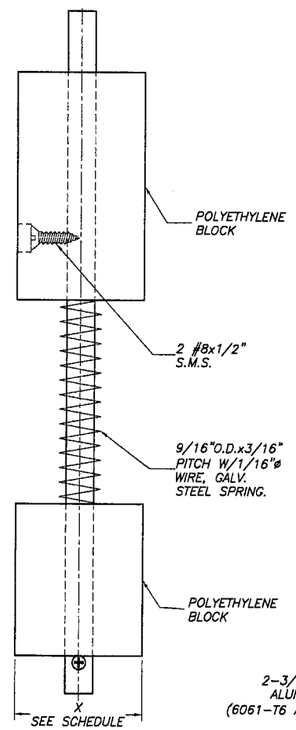

FRONT

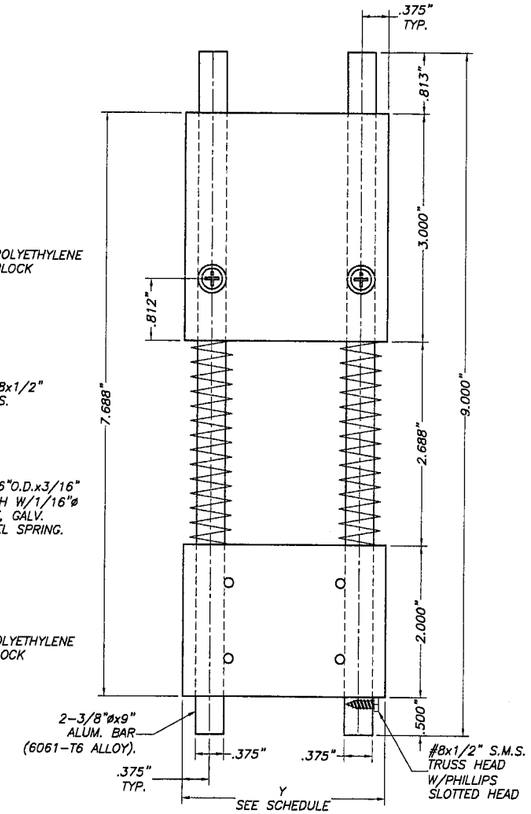

SIDE VIEW

TOP SPRING-LOADED SYSTEM

SCALE: 1/2" = 1"

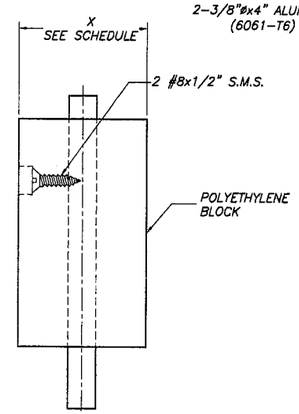

FRONT

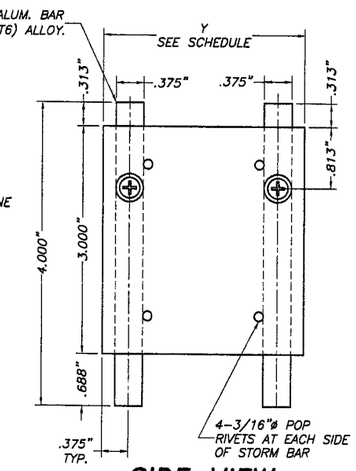

SIDE VIEW

BOTTOM SPRING-LOADED SYSTEM

SCALE: 1/2" = 1"

X, Y DIMENSIONS FOR A GIVEN TYPE OF STORM BAR		
STORM BAR TYPE	X(in)	Y(in)
(C)	1 19/32"	1 19/32"
(D)	1 23/32"	2 23/32"
(E)	1 23/32"	3 23/32"
(F)	1 15/32"	3 15/32"
(D1)	1 23/32"	2 23/32"
(F1)	1 15/32"	3 15/32"

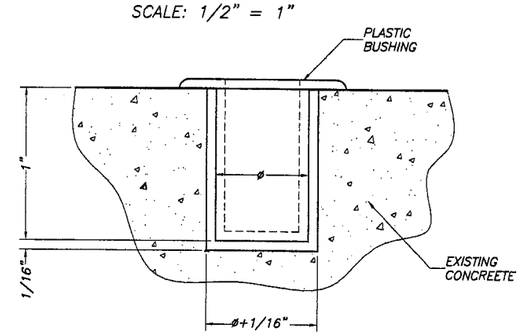

ENGAGEMENT HOLE DETAIL (IN CONCRETE) FOR REMOVABLE SPRING-LOADED STORM BARS

SCALE: 1" = 1"

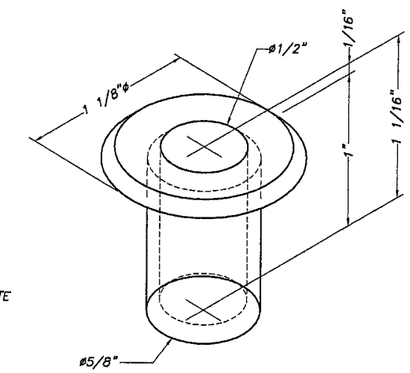

PLASTIC BUSHING: DETAIL 1(ISOMETRIC)

SCALE: 1" = 1"

NOTES:

(1) ENGAGEMENT HOLE DRILLED IN CONCRETE SHALL BE 5/8"øx1" DEEP, W/1/16" MAX. TOLERANCE IN BOTH DIAMETER & DEPTH.

(2) ENGAGEMENT HOLE DRILLED IN CONCRETE SHALL BE PERMANENTLY PROTECTED BY FITTING PLASTIC BUSHING (SEE DETAIL 1) INTO HOLE. IT SHALL BE THE RESPONSIBILITY OF SHUTTERS'S OWNER TO PERMANENTLY KEEP BUSHING FREE OF DUST & MOLD BY REMOVING IT FROM ENGAGEMENT HOLE, CLEANING IT AND REPOSITIONING IT INTO HOLE AS INDICATED ON ABOVE DETAIL.

TYPICAL SPRING-LOADED SYSTEM FOR REMOVABLE STORM BARS AS ALTERNATE TO THE USE OF CALK-IN ANCHORS

PRODUCT REVISED
as complying with the Florida
Building Code
Acceptance No 09-0527.06
Expiration Date June 07, 2014
By
Miami-Dade Product Control
Division

Florida Building Code (High Velocity Hurricane Zone)

© 2009 TILTECO INC.

TILTECO INC.
TILLIT TESTING & ENGINEERING COMPANY
6355 N.W. 36th. St., Ste. 305, VIRGINIA GARDENS, Fl. 33166
Phone : (305)871-1530 . Fax : (305)871-1531
e-mail: tilteco@aol.com
EB-0006719
WALTER A. TILLIT Jr. P.E.
FLORIDA Lic. # 44167

JUN 01 2009

60mm SLAT ROLL-UP SHUTTER

ROLLINGSHIELD, INC.
(N.S.A.# 1)
2500 N.W. 74th AVE.
MIAMI, FL. 33122
Phone : (305)436-6661 . Fax : (305)436-5523

REV. No	DESCRIPTION	DATE	REV. No	DESCRIPTION	DATE
1	OLD 05-218	4/3/09			
2					

DRAWN BY: L.G.
4/3/09 DATE
09-041 DRAWING No
SHEET 9 OF 16

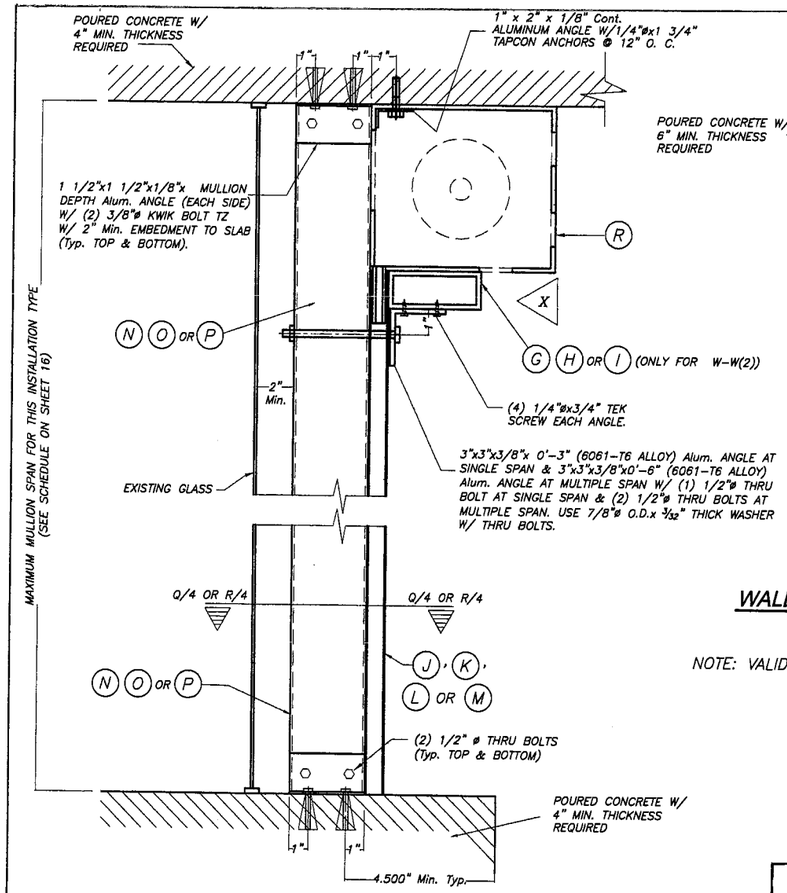

FLOOR/CEILING MOUNTING : SECTION W-W (1), W/O HEADER SECTION W-W (2), W/HEADER

SCALE : 1/8" = 1"

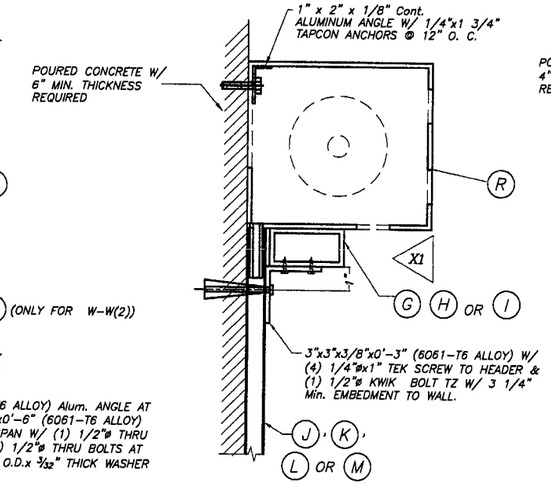

ALTERNATIVE :1 WALL MOUNTING : SECTION W-W (3)

SCALE : 1/8" = 1"

NOTE: VALID FOR ALL SPANS AND LOAD COMBINATIONS.

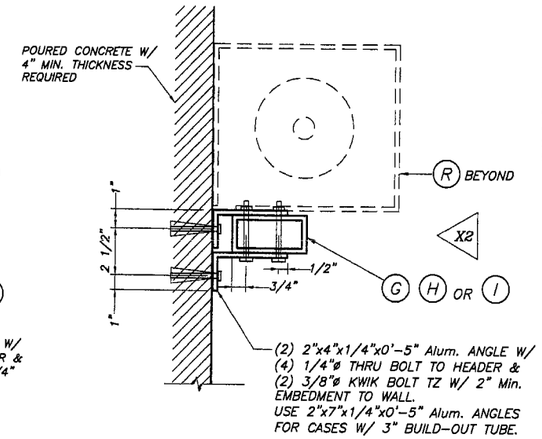

ALTERNATIVE :2 WALL MOUNTING : SECTION W-W(3)

SCALE : 1/8" = 1"

NOTE: VALID FOR ALL SPANS AND LOAD COMBINATIONS.

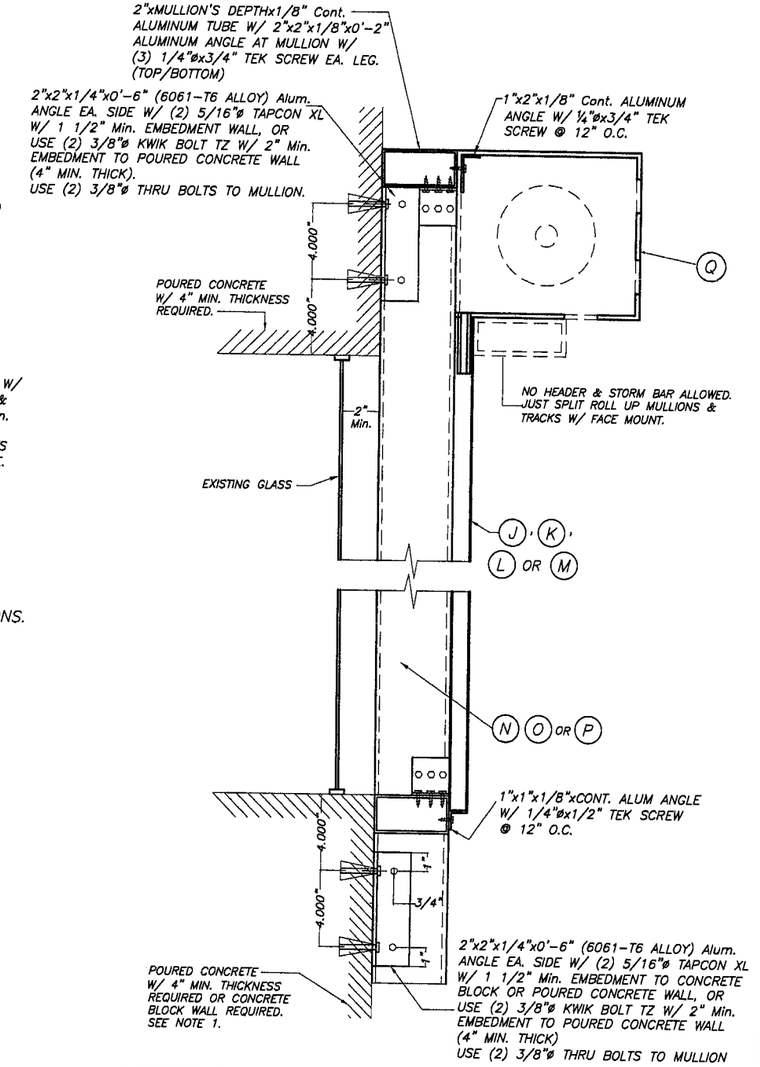

WALL MOUNTING : MULLION CONNECTION AT TOP & BOTTOM : SECTION W-W (1)

SCALE : 1/8" = 1"

NOTE 1:

EXISTING WALL MAY CONCRETE BLOCK FOR DESIGN LOADS UP TO 130.0 psf W/ 4'-0" Max. MULLION SPAN AND 4'-0" Max. MULLION SPACING AND SHALL BE 4" MIN. THICK POURED CONCRETE FOR ALL GREATER MULLION SPAN AND LOAD COMBINATIONS.

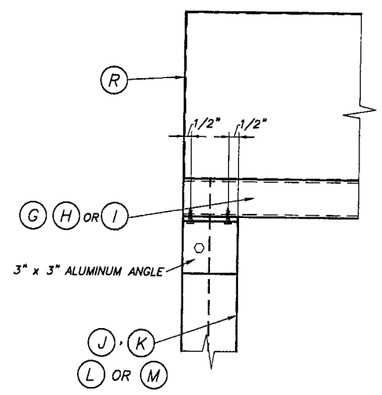

ELEVATION X1

SCALE : 1/8" = 1"

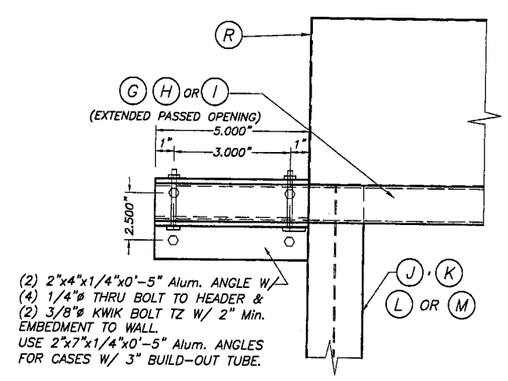

ELEVATION X2

SCALE : 1/8" = 1"

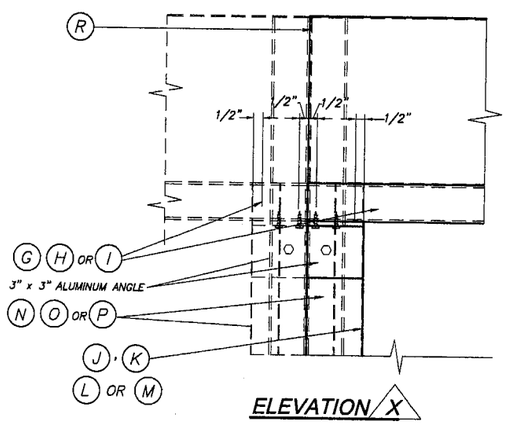

ELEVATION X

SCALE : 1/8" = 1"

TYPICAL HEADER CONNECTION AT ENDS: SECTIONS W-W

PRODUCT REVISED
as complying with the Florida Building Code
Acceptance No 09-0527.06
Expiration Date June 07, 2014
By
Miami-Dade Product Control Division

Florida Building Code (High Velocity Hurricane Zone)

© 2009 TILTECO INC.

TILTECO INC.
TILLIT TESTING & ENGINEERING COMPANY
6355 N.W. 36th. St., Ste. 305, VIRGINIA GARDENS, Fl. 33166
Phone : (305)871-1530 . Fax : (305)871-1531
e-mail: tilteco@aol.com
EB-0006719
WALTER A. TILLIT Jr. P.E.
FLORIDA Lic. # 44167

60mm SLAT ROLL-UP SHUTTER

ROLLINGSHIELD, INC.
(N.S.A.# 1)
2500 N.W. 74th AVE.
MIAMI, FL. 33122
Phone : (305)436-6661 . Fax : (305)436-5523

REV. No	DESCRIPTION	DATE	REV. No	DESCRIPTION	DATE
1	OLD 05-218	4/3/09			
2					

DRAWN BY: L.G.
4/3/09 DATE
09-041 DRAWING No
SHEET 10 OF 16

MAY 01 2009

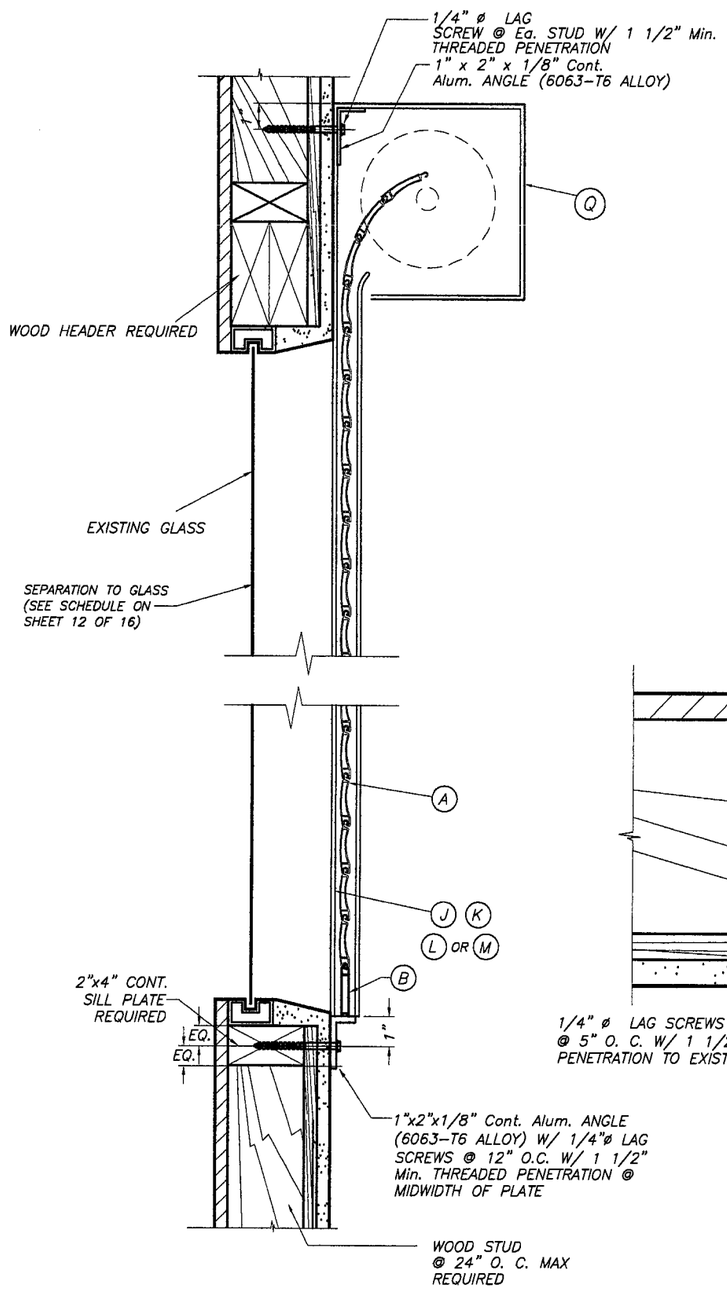

WALL MOUNTING INSTALLATION
SINGLE SPAN CONDITION
N. T. S.

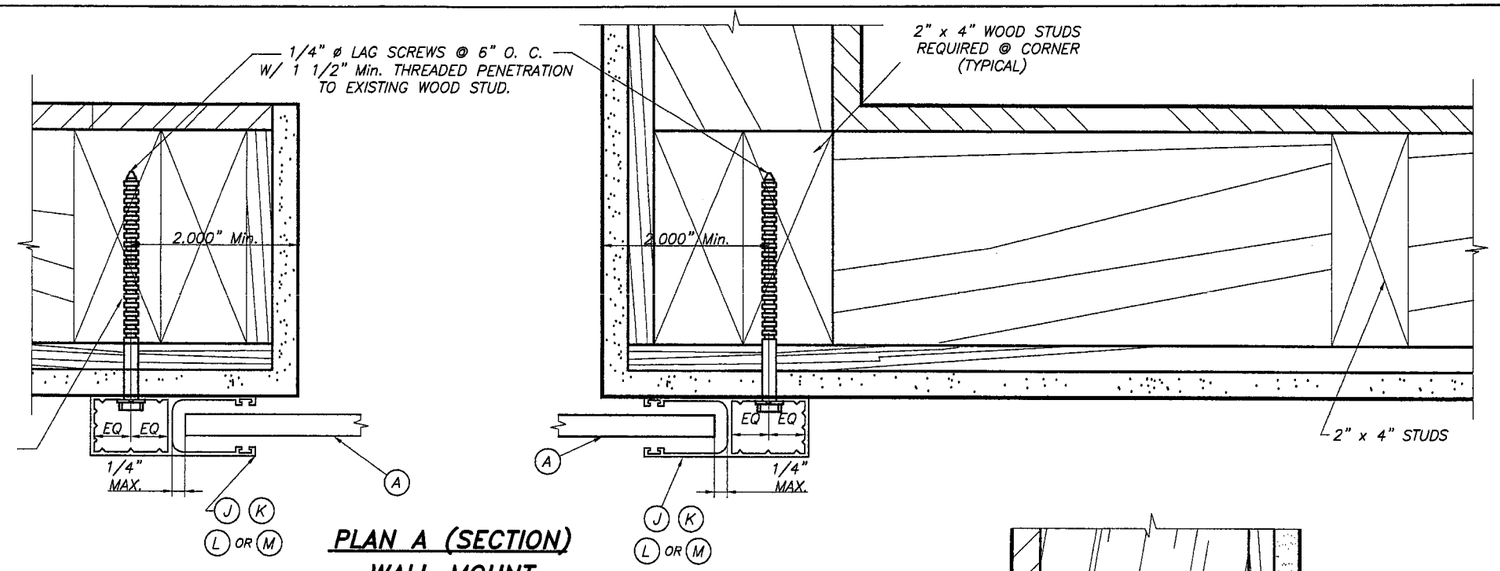

PLAN A (SECTION)
WALL MOUNT
SCALE : 3/8" = 1"

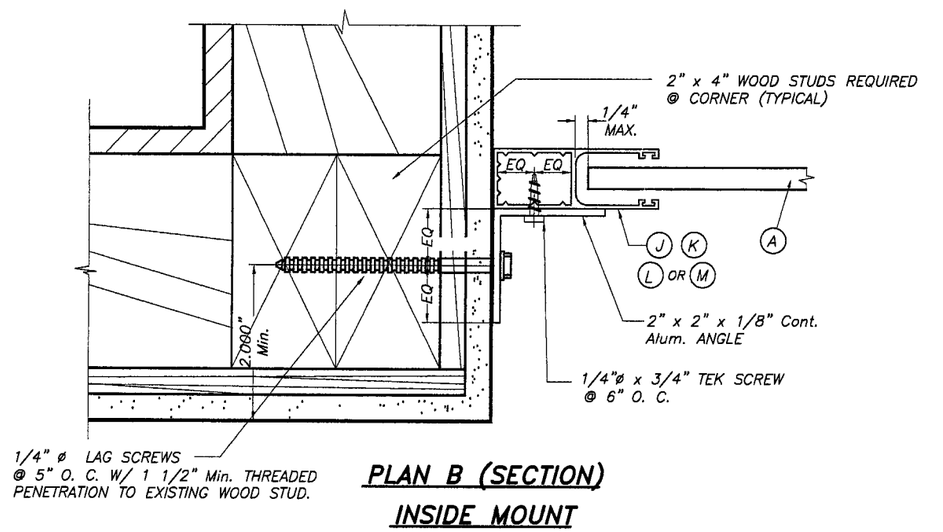

PLAN B (SECTION)
INSIDE MOUNT
SCALE : 3/8" = 1"

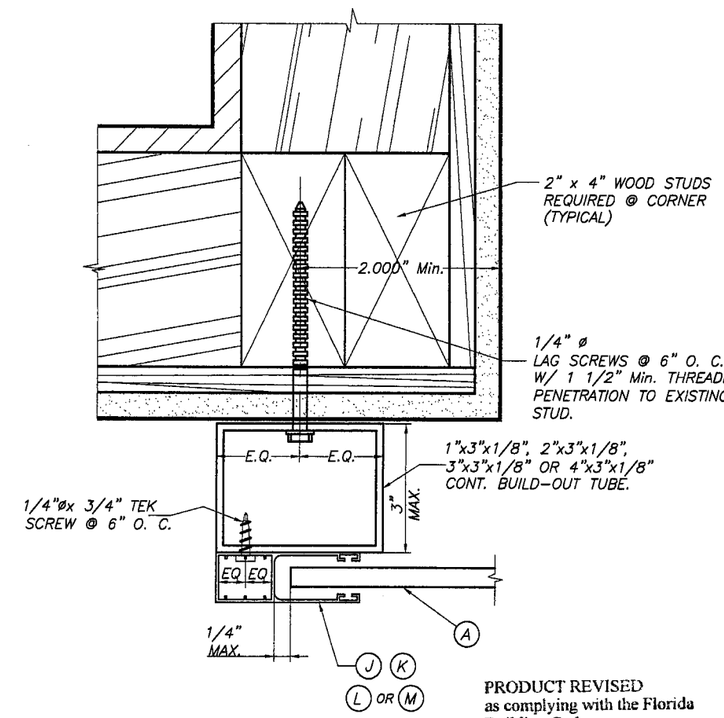

PLAN C (SECTION)
BUILD-OUT
SCALE : 3/8" = 1"

NOTES:

1. INSTALLATIONS ARE ONLY VALID FOR BUILDINGS WITH DESIGN LOADS UP TO 75.0 psf AND FOR SHUTTERS W/O STORM BARS, HEADERS AND MULLIONS.
2. FOR NEW FRAME CONSTRUCTION: WOOD MEMBER TO BE SOUTHERN PINE No. 2 W/ SPECIFIC DENSITY OF 0.55 OR EQUAL.

PRODUCT REVISED
as complying with the Florida Building Code
Acceptance No 09-0527.06
Expiration Date June 07/2014
By
Miami Dade Product Control Division

Florida Building Code (High Velocity Hurricane Zone)

© 2009 TILTECO INC.

TILTECO INC.
TILLIT TESTING & ENGINEERING COMPANY
6355 N.W. 36th. St., Ste. 305, VIRGINIA GARDENS, Fl. 33166
Phone : (305)871-1530 . Fax : (305)871-1531
e-mail: tilteco@aol.com
EB-0006719
WALTER A. TILLIT Jr. P.E.
FLORIDA Lic. # 44167

JUN 01 2009

60mm SLAT ROLL-UP SHUTTER

ROLLINGSHIELD, INC.
(N.S.A.# 1)
2500 N.W. 74th AVE.
MIAMI, FL. 33122
Phone : (305)436-6661 . Fax : (305)436-5523

REV. No	DESCRIPTION	DATE	REV. No	DESCRIPTION	DATE
1	OLD 05-218	4/3/09			
2					

DRAWN BY: L.G.
4/3/09 DATE
09-041 DRAWING No
SHEET 11 OF 16

SLAT PERFORMANCE CHART
MAXIMUM DESIGN PRESSURE RATING "W" (p. s. f.) AND CORRESPONDING MAXIMUM SLAT SPAN "L" FOR TYPE 1 SLAT

(USE MAXIMUM VALUES BETWEEN POSITIVE AND NEGATIVE LOADS)

SLAT TYPE / Max. DESIGN LOAD "W" (p.s.f.)	MAXIMUM SLAT SPAN	MINIMUM SEPARATION TO GLASS	
	SINGLE & MULTIPLE UNIT *	SINGLE & MULTIPLE UNIT **	SINGLE & MULTIPLE UNIT ***
40.0 OR LESS	6'-8"'	3"	3"
45.0	6'-6"	3"	3"
50.0	6'-3"	3"	3"
55.0	6'-1"	3"	3"
60.0	5'-11"	3"	3"
65.0	5'-9"	3"	3"
70.0	5'-7"	3"	3"
75.0	5'-6"	3"	3"
80.0	5'-5"	3"	3"
85.0	5'-3"	3"	3"
90.0	5'-2"	3"	3"
95.0	5'-1"	3"	3"
100.0	5'-0"	3"	3"
105.0	4'-11"	3"	3"
110.0	4'-10"	3"	3"
115.0	4'-9"	3"	3"
120.0	4'-8"	3"	3"
125.0	4'-8"	3"	3"
130.0	4'-7"	3"	3"
135.0	4'-6"	3"	3"
140.0	4'-5"	3"	3"
145.0	4'-5"	3"	3"
150.0	4'-4"	3"	3"
155.0	4'-3"	3"	3"
160.0	4'-2"	3"	3"
165.0	4'-1"	3"	3"
170.0	4'-0"	3"	3"
175.0	4'-0"	3"	3"
180.0	3'-11"	3"	3"
185.0	3'-10"	3"	3"
190.0	3'-10"	3"	3"
195.0	3'-9"	3"	3"

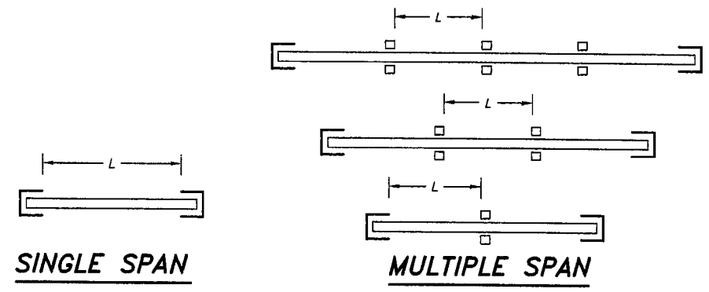

SPAN LAYOUT

* SPANS VALID FOR EVERY INSTALLATION LOCATED AT ANY ELEVATION OF BUILDING MEASURED AT BOTTOM OF SHUTTER. MINIMUM SEPARATION TO GLASS FOR SINGLE AND MULTIPLE UNITS SHALL BE MEASURED FROM BACK OF SLAT TO GLASS.

** MINIMUM SEPARATION TO GLASS FOR SHUTTERS INSTALLED WITHIN THE FIRST 30'-0" ELEVATION OF BUILDING AND MAXIMUM SPAN. SEE TABLE 1 FOR Min. SEPARATION TO GLASS FOR SPANS LESS THAN THE Max. ALLOWED.

*** MINIMUM SEPARATION TO GLASS FOR SHUTTERS INSTALLED ABOVE 30'-0" ELEVATION OF BUILDING, MEASURED AT BOTTOM OF SHUTTER.

TABLE 1:

SLAT SPAN (ft.)	MINIMUM SEPARATION TO GLASS
80" OR LESS	3"

NOTE : THE TOTAL SLAT DEFLECTION AFTER ADDING THE DEFLECTION OF THE HEADER AND/OR THE STORM BAR SHALL NOT EXCEED A MAXIMUM OF 2" OR L/30 IN THE POSITIVE DIRECTION AND A MAXIMUM OF L/30 IN THE NEGATIVE DIRECTION.

PRODUCT REVISED
as complying with the Florida Building Code
Acceptance No 09-0527.06
Expiration Date June 07, 2014
By
Miami-Dade Product Control Division

Florida Building Code (High Velocity Hurricane Zone)

© 2009 TILTECO INC.

TILTECO INC.
TILLIT TESTING & ENGINEERING COMPANY
8355 N.W. 36th. St., Ste. 305, VIRGINIA GARDENS, FL 33166
Phone : (305)871-1530 . Fax : (305)871-1531
e-mail: tilteco@aol.com
EB-0006719
WALTER A. TILLIT Jr. P.E.
FLORIDA Lic. # 44167

JUN 01 2009

60mm SLAT ROLL-UP SHUTTER

ROLLINGSHIELD, INC.
(N.S.A.# 1)
2500 N.W. 74th AVE.
MIAMI, FL. 33122
Phone : (305)436-6661 . Fax : (305)436-5523

REV. No	DESCRIPTION	DATE	REV. No	DESCRIPTION	DATE
1	OLD 05-218	4/3/09			
2					

DRAWN BY: L.G.
4/3/09 DATE
09-041 DRAWING No
SHEET 12 OF 16

STORM BAR LOADING CHART

MAXIMUM DESIGN PRESSURE RATING "W" (p. s. f.) AND CORRESPONDING MAXIMUM SPAN "L" FOR A GIVEN TYPE OF STORM BAR AND STORM BAR SPACING.

(USE MAXIMUM VALUES BETWEEN POSITIVE AND NEGATIVE LOADS)

MAX. SPAN FOR STORM BARS W/REGULAR CONCRETE ANCHORS

MAXIMUM DESIGN LOAD "W" (p.s.f.)	(C) TYPE 1 STORM BAR 2" x 2" x 3/16"					(D) TYPE 2 STORM BAR 2" x 3" x 1/8"					(E) TYPE 3 STORM BAR 2" x 4" x 1/8"				
	* STORM BAR SPACING					* STORM BAR SPACING					* STORM BAR SPACING				
	⩽ 3'-0"	3' TO 4'	4' TO 5'	5' TO 6'	6' TO 6.5'	⩽ 3'-0"	3' TO 4'	4' TO 5'	5' TO 6'	6' TO 6.5'	⩽ 3'-0"	3' TO 4'	4' TO 5'	5' TO 6'	6' TO 6.5'
40 OR LESS	6'-0"	6'-0"	6'-0"	5'-7"	5'-5"	8'-0"	7'-10"	7'-0"	6'-4"	6'-1"	10'-3"	9'-6"	8'-7"	7'-10"	7'-6"
45	6'-0"	6'-0"	5'-9"	5'-3"	5'-1"	8'-0"	7'-4"	6'-7"	6'-0"	5'-9"	9'-11"	9'-1"	8'-1"	7'-5"	7'-1"
50	6'-0"	6'-0"	5'-6"	5'-0"	4'-10"	8'-0"	7'-0"	6'-3"	5'-8"	5'-6"	9'-8"	8'-7"	7'-8"	7'-0"	6'-9"
55	6'-0"	5'-10"	5'-3"	4'-9"	4'-7"	7'-8"	6'-8"	5'-11"	5'-5"	5'-3"	9'-5"	8'-2"	7'-4"	6'-8"	6'-5"
60	6'-0"	5'-7"	5'-0"	4'-7"	4'-5"	7'-4"	6'-4"	5'-8"	5'-2"	5'-0"	9'-1"	7'-10"	7'-0"	6'-5"	6'-2"
65	6'-0"	5'-5"	4'-10"	4'-5"	4'-3"	7'-1"	6'-1"	5'-6"	5'-0"	4'-10"	8'-8"	7'-6"	6'-9"	6'-2"	5'-11"
70	6'-0"	5'-2"	4'-8"	4'-3"	4'-1"	6'-10"	5'-11"	5'-3"	4'-10"	4'-7"	8'-4"	7'-3"	6'-6"	5'-11"	5'-8"
75	5'-9"	5'-0"	4'-6"	4'-1"	3'-11"	6'-7"	5'-8"	5'-1"	4'-8"	4'-6"	8'-1"	7'-0"	6'-3"	5'-9"	5'-6"
80	5'-7"	4'-10"	4'-4"	4'-0"	3'-10"	6'-4"	5'-6"	4'-11"	4'-6"	4'-4"	7'-10"	6'-9"	6'-1"	5'-6"	5'-4"
85	5'-5"	4'-8"	4'-3"	3'-10"	3'-8"	6'-2"	5'-4"	4'-9"	4'-4"	4'-2"	7'-7"	6'-7"	5'-11"	5'-4"	5'-2"
90	5'-3"	4'-7"	4'-1"	3'-9"	3'-7"	6'-0"	5'-2"	4'-8"	4'-3"	4'-1"	7'-5"	6'-5"	5'-9"	5'-3"	5'-0"
95	5'-2"	4'-5"	4'-0"	3'-8"	3'-6"	5'-10"	5'-1"	4'-6"	4'-2"	4'-0"	7'-2"	6'-3"	5'-7"	5'-1"	4'-11"
100	5'-0"	4'-4"	3'-11"	3'-7"	3'-5"	5'-8"	4'-11"	4'-5"	4'-0"	3'-10"	7'-0"	6'-1"	5'-5"	4'-11"	4'-9"
105	4'-11"	4'-3"	3'-9"	3'-6"	3'-4"	5'-7"	4'-10"	4'-4"	3'-11"	3'-9"	6'-10"	5'-11"	5'-4"	4'-10"	4'-8"
110	4'-9"	4'-2"	3'-8"	3'-5"	3'-3"	5'-5"	4'-8"	4'-2"	3'-10"	3'-8"	6'-8"	5'-9"	5'-2"	4'-9"	4'-6"
115	4'-8"	4'-1"	3'-7"	3'-4"	3'-2"	5'-4"	4'-7"	4'-1"	3'-9"	3'-7"	6'-6"	5'-8"	5'-1"	4'-7"	4'-5"
120	4'-7"	4'-0"	3'-7"	3'-3"	3'-1"	5'-2"	4'-6"	4'-0"	3'-8"	3'-6"	6'-5"	5'-6"	4'-11"	4'-6"	4'-4"
125	4'-6"	3'-11"	3'-6"	3'-2"	3'-1"	5'-1"	4'-5"	3'-11"	3'-7"	3'-6"	6'-3"	5'-5"	4'-10"	4'-5"	4'-3"
130	4'-5"	3'-10"	3'-5"	3'-1"	3'-0"	5'-0"	4'-4"	3'-10"	3'-6"	3'-5"	6'-2"	5'-4"	4'-9"	4'-4"	4'-2"
135	4'-4"	3'-9"	3'-4"	3'-1"	2'-11"	4'-11"	4'-3"	3'-10"	3'-6"	3'-4"	6'-0"	5'-2"	4'-8"	4'-3"	4'-1"
140	4'-3"	3'-8"	3'-3"	3'-0"	2'-11"	4'-10"	4'-2"	3'-9"	3'-5"	3'-3"	5'-11"	5'-1"	4'-7"	4'-2"	4'-0"
145	4'-2"	3'-7"	3'-3"	2'-11"	2'-10"	4'-9"	4'-1"	3'-8"	3'-4"	3'-3"	5'-10"	5'-0"	4'-6"	4'-1"	3'-11"
150	4'-1"	3'-7"	3'-2"	2'-11"	2'-9"	4'-8"	4'-0"	3'-7"	3'-3"	3'-2"	5'-9"	4'-11"	4'-5"	4'-1"	3'-11"
155	4'-0"	3'-6"	3'-1"	2'-10"	2'-9"	4'-7"	4'-0"	3'-7"	3'-3"	3'-1"	5'-8"	4'-10"	4'-4"	4'-0"	3'-10"
160	4'-0"	3'-5"	3'-1"	2'-10"	2'-8"	4'-6"	3'-11"	3'-6"	3'-2"	3'-1"	5'-6"	4'-10"	4'-3"	3'-11"	3'-9"
165	3'-11"	3'-5"	3'-0"	2'-9"	2'-8"	4'-5"	3'-10"	3'-5"	3'-2"	3'-0"	5'-5"	4'-9"	4'-3"	3'-10"	3'-8"
170	3'-10"	3'-4"	3'-0"	2'-9"	2'-7"	4'-4"	3'-9"	3'-5"	3'-1"	3'-0"	5'-4"	4'-8"	4'-2"	3'-10"	3'-8"
175	3'-9"	3'-3"	2'-11"	2'-8"	2'-7"	4'-4"	3'-9"	3'-4"	3'-1"	2'-11"	5'-4"	4'-7"	4'-1"	3'-9"	3'-7"
180	3'-9"	3'-3"	2'-11"	2'-8"	2'-6"	4'-3"	3'-8"	3'-3"	3'-0"	2'-11"	5'-3"	4'-6"	4'-1"	3'-8"	3'-7"
185	3'-8"	3'-2"	2'-10"	2'-7"	2'-6"	4'-2"	3'-8"	3'-3"	3'-0"	2'-10"	5'-2"	4'-6"	4'-0"	3'-8"	3'-6"
190	3'-8"	3'-2"	2'-10"	2'-7"	2'-6"	4'-2"	3'-7"	3'-2"	2'-11"	2'-10"	5'-1"	4'-5"	3'-11"	3'-7"	3'-5"
195	3'-7"	3'-1"	2'-9"	2'-6"	2'-5"	4'-1"	3'-6"	3'-2"	2'-11"	2'-9"	5'-0"	4'-4"	3'-11"	3'-7"	3'-5"

* STORM BAR SPACING SHALL BE SUCH THAT MAXIMUM SLAT SPAN SHALL NOT BE EXCEEDED.

PRODUCT REVISED
as complying with the Florida
Building Code
Acceptance No 09-0527.06
Expiration Date June 09/2014
By
Miami-Dade Product Control
Division

Florida Building Code (High Velocity Hurricane Zone)

© 2009 TILTECO INC.

TILTECO INC.
TILLIT TESTING & ENGINEERING COMPANY
6355 N.W. 36th. St., Ste. 305, VIRGINIA GARDENS, Fl. 33166
Phone : (305)871-1530 . Fax : (305)871-1531
e-mail: tilteco@aol.com
EB-0006719
WALTER A. TILLIT Jr. P.E.
FLORIDA Lic. # 44167

JUN 01 2009

60mm SLAT ROLL-UP SHUTTER

ROLLINGSHIELD, INC.
(N.S.A.# 1)
2500 N.W. 74th AVE.
MIAMI, FL. 33122
Phone : (305)436-6661 . Fax : (305)436-5523

REV. No	DESCRIPTION	DATE	REV. No	DESCRIPTION	DATE
1	OLD 05-218	4/3/09			
2					

DRAWN BY: L.G.
4/3/09 DATE
09-041 DRAWING No
SHEET 13 OF 16

STORM BAR LOADING CHART

MAXIMUM DESIGN PRESSURE RATING "W" (p. s. f.) AND CORRESPONDING MAXIMUM SPAN "L" FOR A GIVEN TYPE OF STORM BAR AND STORM BAR SPACING.

(USE MAXIMUM VALUES BETWEEN POSITIVE AND NEGATIVE LOADS)

MAX. SPAN FOR STORM BARS W/REGULAR CONCRETE ANCHORS

MAXIMUM DESIGN LOAD "W" (p.s.f.)	(F) TYPE 4 STORM BAR 2" x 4" x 1/4"					(D1) TYPE 5 STORM BAR (2) 2" x 3" x 1/8"					(F1) TYPE 6 STORM BAR (2) 2" x 4" x 1/4"				
	* STORM BAR SPACING					* STORM BAR SPACING					* STORM BAR SPACING				
	⩽ 3'-0"	3' TO 4'	4' TO 5'	5' TO 6'	6' TO 6.5'	⩽ 3'-0"	3' TO 4'	4' TO 5'	5' TO 6'	6' TO 6.5'	⩽ 3'-0"	3' TO 4'	4' TO 5'	5' TO 6'	6' TO 6.5'
40 OR LESS	11'-10"	11'-0"	10'-5"	9'-11"	9'-9"	10'-3"	9'-6"	9'-0"	8'-7"	8'-5"	14'-1"	13'-1"	12'-5"	11'-10"	11'-7"
45	11'-6"	10'-8"	10'-1"	9'-8"	9'-5"	9'-11"	9'-3"	8'-9"	8'-4"	8'-2"	13'-8"	12'-9"	12'-0"	11'-6"	11'-3"
50	11'-2"	10'-5"	9'-10"	9'-4"	9'-0"	9'-8"	9'-0"	8'-6"	8'-1"	7'-9"	13'-4"	12'-5"	11'-9"	11'-2"	11'-0"
55	10'-11"	10'-2"	9'-7"	8'-11"	8'-7"	9'-5"	8'-9"	8'-4"	7'-8"	7'-5"	13'-0"	12'-1"	11'-5"	10'-11"	10'-9"
60	10'-8"	9'-11"	9'-4"	8'-6"	8'-2"	9'-3"	8'-7"	8'-1"	7'-4"	7'-1"	12'-9"	11'-10"	11'-2"	10'-8"	10'-6"
65	10'-6"	9'-9"	9'-0"	8'-2"	7'-10"	9'-1"	8'-5"	7'-9"	7'-1"	6'-10"	12'-6"	11'-7"	11'-0"	10'-6"	10'-3"
70	10'-4"	9'-7"	8'-8"	7'-11"	7'-7"	8'-11"	8'-3"	7'-6"	6'-10"	6'-7"	12'-3"	11'-5"	10'-9"	10'-4"	10'-1"
75	10'-1"	9'-4"	8'-4"	7'-8"	7'-4"	8'-9"	8'-1"	7'-3"	6'-7"	6'-4"	12'-0"	11'-2"	10'-7"	10'-1"	9'-11"
80	9'-11"	9'-1"	8'-1"	7'-5"	7'-1"	8'-7"	7'-10"	7'-0"	6'-5"	6'-2"	11'-10"	11'-0"	10'-5"	9'-11"	9'-9"
85	9'-10"	8'-9"	7'-10"	7'-2"	6'-11"	8'-5"	7'-7"	6'-9"	6'-2"	5'-11"	11'-8"	10'-10"	10'-3"	9'-10"	9'-7"
90	9'-8"	8'-6"	7'-8"	7'-0"	6'-8"	8'-4"	7'-4"	6'-7"	6'-0"	5'-9"	11'-6"	10'-8"	10'-1"	9'-8"	9'-3"
95	9'-6"	8'-4"	7'-5"	6'-9"	6'-6"	8'-3"	7'-2"	6'-5"	5'-10"	5'-8"	11'-4"	10'-7"	10'-0"	9'-5"	9'-0"
100	9'-4"	8'-1"	7'-3"	6'-7"	6'-4"	8'-1"	7'-0"	6'-3"	5'-9"	5'-6"	11'-2"	10'-5"	9'-10"	9'-2"	8'-10"
105	9'-1"	7'-11"	7'-1"	6'-5"	6'-2"	7'-11"	6'-10"	6'-1"	5'-7"	5'-4"	11'-1"	10'-4"	9'-9"	8'-11"	8'-7"
110	8'-11"	7'-9"	6'-11"	6'-4"	6'-1"	7'-8"	6'-8"	6'-0"	5'-5"	5'-3"	10'-11"	10'-2"	9'-7"	8'-9"	8'-5"
115	8'-9"	7'-7"	6'-9"	6'-2"	5'-11"	7'-6"	6'-6"	5'-10"	5'-4"	5'-1"	10'-10"	10'-1"	9'-4"	8'-7"	8'-3"
120	8'-6"	7'-5"	6'-7"	6'-0"	5'-10"	7'-4"	6'-5"	5'-9"	5'-3"	5'-0"	10'-8"	9'-11"	9'-2"	8'-4"	8'-0"
125	8'-4"	7'-3"	6'-6"	5'-11"	5'-8"	7'-3"	6'-3"	5'-7"	5'-1"	4'-11"	10'-7"	9'-10"	9'-0"	8'-2"	7'-11"
130	8'-2"	7'-1"	6'-4"	5'-10"	5'-7"	7'-1"	6'-2"	5'-6"	5'-0"	4'-10"	10'-6"	9'-9"	8'-10"	8'-0"	7'-9"
135	8'-0"	7'-0"	6'-3"	5'-8"	5'-6"	6'-11"	6'-0"	5'-5"	4'-11"	4'-9"	10'-5"	9'-8"	8'-8"	7'-11"	7'-7"
140	7'-11"	6'-10"	6'-1"	5'-7"	5'-4"	6'-10"	5'-11"	5'-3"	4'-10"	4'-8"	10'-4"	9'-6"	8'-6"	7'-9"	7'-5"
145	7'-9"	6'-9"	6'-0"	5'-6"	5'-3"	6'-8"	5'-10"	5'-2"	4'-9"	4'-7"	10'-2"	9'-4"	8'-4"	7'-7"	7'-4"
150	7'-8"	6'-7"	5'-11"	5'-5"	5'-2"	6'-7"	5'-9"	5'-1"	4'-8"	4'-6"	10'-1"	9'-2"	8'-2"	7'-6"	7'-2"
155	7'-6"	6'-6"	5'-10"	5'-4"	5'-1"	6'-6"	5'-7"	5'-0"	4'-7"	4'-5"	10'-0"	9'-0"	8'-1"	7'-4"	7'-1"
160	7'-5"	6'-5"	5'-9"	5'-3"	5'-0"	6'-5"	5'-6"	4'-11"	4'-6"	4'-4"	9'-11"	8'-11"	7'-11"	7'-3"	7'-0"
165	7'-3"	6'-4"	5'-8"	5'-2"	4'-11"	6'-3"	5'-5"	4'-10"	4'-5"	4'-3"	9'-11"	8'-9"	7'-10"	7'-2"	6'-10"
170	7'-2"	6'-2"	5'-7"	5'-1"	4'-10"	6'-2"	5'-4"	4'-10"	4'-5"	4'-2"	9'-10"	8'-7"	7'-8"	7'-0"	6'-9"
175	7'-1"	6'-1"	5'-6"	5'-0"	4'-10"	6'-1"	5'-3"	4'-9"	4'-4"	4'-2"	9'-9"	8'-6"	7'-7"	6'-11"	6'-8"
180	7'-0"	6'-0"	5'-5"	4'-11"	4'-9"	6'-0"	5'-3"	4'-8"	4'-3"	4'-1"	9'-8"	8'-4"	7'-6"	6'-10"	6'-7"
185	6'-10"	5'-11"	5'-4"	4'-10"	4'-8"	5'-11"	5'-2"	4'-7"	4'-2"	4'-0"	9'-6"	8'-3"	7'-5"	6'-9"	6'-6"
190	6'-9"	5'-10"	5'-3"	4'-9"	4'-7"	5'-10"	5'-1"	4'-6"	4'-2"	4'-0"	9'-5"	8'-2"	7'-3"	6'-8"	6'-5"
195	6'-8"	5'-10"	5'-2"	4'-9"	4'-7"	5'-9"	5'-0"	4'-6"	4'-1"	3'-11"	9'-3"	8'-0"	7'-2"	6'-7"	6'-4"

* STORM BAR SPACING SHALL BE SUCH THAT MAXIMUM SLAT SPAN SHALL NOT BE EXCEEDED.

PRODUCT REVISED
as complying with the Florida
Building Code
Acceptance No 09-0527.06
Expiration Date June 07, 2014
By
Miami Dade Product Control
Division

Florida Building Code (High Velocity Hurricane Zone)

© 2009 TILTECO INC.

TILTECO INC.
TILLIT TESTING & ENGINEERING COMPANY
6355 N.W. 36th. St., Ste. 305, VIRGINIA GARDENS, Fl. 33166
Phone : (305)871-1530 . Fax : (305)871-1531
e-mail: tilteco@aol.com
EB-0006719
WALTER A. TILLIT Jr. P.E.
FLORIDA Lic. # 44167

JUN 01 2009

60mm SLAT ROLL-UP SHUTTER

ROLLINGSHIELD, INC.
(N.S.A.# 1)
2500 N.W. 74th AVE.
MIAMI, FL. 33122
Phone : (305)436-6661 . Fax : (305)436-5523

REV. No	DESCRIPTION	DATE	REV. No	DESCRIPTION	DATE
1	OLD 05-218	4/3/09			
2					

DRAWN BY: L.G.
4/3/09 DATE
09-041 DRAWING No
SHEET 14 OF 16

STORM BAR LOADING CHART

MAXIMUM DESIGN PRESSURE RATING "W" (p. s. f.) AND CORRESPONDING MAXIMUM SPAN "L" FOR A GIVEN TYPE OF STORM BAR AND STORM BAR SPACING.

(USE MAXIMUM VALUES BETWEEN POSITIVE AND NEGATIVE LOAD)

MAX. SPAN FOR STORM BARS W/SPRING-LOADED SYSTEM

MAXIMUM DESIGN LOAD "W" (p.s.f.)	(C) TYPE 1 STORM BAR 2" x 2" x 3/16"		(D) TYPE 2 STORM BAR 2" x 3" x 1/8"		(E) TYPE 3 STORM BAR 2" x 4" x 1/8"	
	* STORM BAR SPACING		* STORM BAR SPACING		* STORM BAR SPACING	
	⩽ 3'-0"	3' TO 4'	⩽ 3'-0"	3' TO 4'	⩽ 3'-0"	3' TO 4'
40 OR LESS	4'-5"	3'-4"	8'-0"	6'-0"	10'-0"	7'-9"
45	3'-11"	3'-0"	7'-1"	5'-4"	9'-2"	6'-11"
50	3'-7"	2'-8"	6'-5"	4'-10"	8'-3"	6'-2"
55	3'-3"	2'-5"	5'-10"	4'-4"	7'-6"	5'-8"
60	3'-0"	2'-3"	5'-4"	4'-0"	6'-11"	5'-2"
65	2'-9"	2'-1"	4'-11"	3'-8"	6'-4"	4'-9"
70	2'-6"	1'-11"	4'-7"	3'-5"	5'-11"	4'-5"
75	2'-4"	1'-9"	4'-3"	3'-2"	5'-6"	4'-1"

* STORM BAR SPACING SHALL BE SUCH THAT MAXIMUM SLAT SPAN SHALL NOT BE EXCEEDED.

STORM BAR LOADING CHART

MAXIMUM DESIGN PRESSURE RATING "W" (p. s. f.) AND CORRESPONDING MAXIMUM SPAN "L" FOR A GIVEN TYPE OF STORM BAR AND STORM BAR SPACING.

(USE MAXIMUM VALUES BETWEEN POSITIVE AND NEGATIVE LOAD)

MAX. SPAN FOR STORM BARS W/SPRING-LOADED SYSTEM

MAXIMUM DESIGN LOAD "W" (p.s.f.)	(F) TYPE 4 STORM BAR 2" x 4" x 1/4"		(D1) TYPE 5 STORM BAR (2) 2" x 3" x 1/8"		(F1) TYPE 6 STORM BAR (2) 2" x 4" x 1/4"	
	* STORM BAR SPACING		* STORM BAR SPACING		* STORM BAR SPACING	
	⩽ 3'-0"	3' TO 4'	⩽ 3'-0"	3' TO 4'	⩽ 3'-0"	3' TO 4'
40 OR LESS	10'-4"	7'-9"	10'-3"	9'-6"	14'-1"	12'-1"
45	9'-2"	6'-11"	9'-11"	8'-11"	13'-8"	10'-8"
50	8'-3"	6'-2"	9'-8"	8'-0"	12'-10"	9'-8"
55	7'-6"	5'-8"	9'-5"	7'-3"	11'-8"	8'-9"
60	6'-11"	5'-2"	8'-11"	6'-8"	10'-8"	8'-0"
65	6'-4"	4'-9"	8'-2"	6'-2"	9'-11"	7'-5"
70	5'-11"	4'-5"	7'-7"	5'-9"	9'-2"	6'-11"
75	5'-6"	4'-1"	7'-1"	5'-4"	8'-7"	6'-5"

* STORM BAR SPACING SHALL BE SUCH THAT MAXIMUM SLAT SPAN SHALL NOT BE EXCEEDED.

PRODUCT REVISED
as complying with the Florida
Building Code
Acceptance No 09-0527.06
Expiration Date June 07, 2014
By
Miami-Dade Product Control
Division

Florida Building Code (High Velocity Hurricane Zone)

JUN 01 2009

© 2009 TILTECO INC.

TILTECO INC.
TILLIT TESTING & ENGINEERING COMPANY
6355 N.W. 36th. St., Ste. 305, VIRGINIA GARDENS, Fl. 33166
Phone : (305)871-1530 . Fax : (305)871-1531
e-mail: tilteco@aol.com
EB-0006719
WALTER A. TILLIT Jr. P.E.
FLORIDA Lic. # 44167

60mm SLAT ROLL-UP SHUTTER

ROLLINGSHIELD, INC.
(N.S.A.# 1)
2500 N.W. 74th AVE.
MIAMI, FL. 33122
Phone : (305)436-6661 . Fax : (305)436-5523

REV. No	DESCRIPTION	DATE	REV. No	DESCRIPTION	DATE
1	OLD 05-218	4/3/09			
2					

DRAWN BY: L.G.
4/3/09 DATE
09-041 DRAWING No
SHEET 14A OF 16

HEADER LOADING CHART MAXIMUM DESIGN PRESSURE RATING "W" (p. s. f.) AND CORRESPONDING MAXIMUM SPAN "L" FOR A GIVEN TYPE OF HEADER.

(USE MAXIMUM VALUES BETWEEN POSITIVE AND NEGATIVE LOADS)

MAXIMUM DESIGN LOAD "W" (p.s.f.)	(G) TYPE 1 HEADER 2" x 3" X 1/8"		(H) TYPE 2 HEADER 2" x 4" X 1/8"		(I) TYPE 3 HEADER 2" x 4" X 1/4"				
	STORM BAR HEIGHT		STORM BAR HEIGHT		STORM BAR HEIGHT				
	⩽ 5'-0"	5' TO 7'	⩽ 5'-0"	5' TO 8'	⩽ 6'-0"	6' TO 8'	8' TO 10'	10' TO 12'	12' TO 14'
40.0	9'-11"	8'-4"	12'-2"	9'-8"	14'-10"	12'-10"	11'-6"	10'-6"	9'-9"
45.0	9'-4"	7'-11"	11'-6"	9'-1"	14'-0"	12'-2"	10'-10"	9'-11"	9'-2"
50.0	8'-10"	7'-6"	10'-11"	8'-8"	13'-4"	11'-6"	10'-4"	9'-5"	8'-8"
55.0	8'-5"	7'-2"	10'-5"	8'-3"	12'-8"	11'-0"	9'-10"	9'-0"	8'-4"
60.0	8'-1"	6'-10"	10'-0"	7'-11"	12'-2"	10'-6"	9'-5"	8'-7"	7'-11"
65.0	7'-9"	6'-7"	9'-7"	7'-7"	11'-8"	10'-1"	9'-0"	8'-3"	7'-8"
70.0	7'-6"	6'-4"	9'-3"	7'-4"	11'-3"	9'-9"	8'-8"	7'-11"	7'-4"
75.0	7'-3"	6'-1"	8'-11"	7'-1"	10'-10"	9'-5"	8'-5"	7'-8"	7'-1"
80.0	7'-0"	5'-11"	8'-8"	6'-10"	10'-6"	9'-1"	8'-2"	7'-5"	6'-11"
85.0	6'-9"	5'-9"	8'-5"	6'-7"	10'-2"	8'-10"	7'-11"	7'-3"	6'-8"
90.0	6'-7"	5'-7"	8'-2"	6'-5"	9'-11"	8'-7"	7'-8"	7'-0"	6'-6"
95.0	6'-5"	5'-5"	7'-11"	6'-3"	9'-8"	8'-4"	7'-6"	6'-10"	6'-4"
100.0	6'-3"	5'-3"	7'-9"	6'-1"	9'-5"	8'-2"	7'-3"	6'-8"	6'-2"
105.0	6'-1"	5'-2"	7'-6"	6'-0"	9'-2"	7'-11"	7'-1"	6'-6"	6'-0"
110.0	6'-0"	5'-1"	7'-4"	5'-10"	9'-0"	7'-9"	6'-11"	6'-4"	5'-10"
115.0	5'-10"	4'-11"	7'-2"	5'-8"	8'-9"	7'-7"	6'-9"	6'-2"	5'-9"
120.0	5'-9"	4'-10"	7'-1"	5'-7"	8'-7"	7'-5"	6'-8"	6'-1"	5'-7"
125.0	5'-7"	4'-9"	6'-11"	5'-6"	8'-5"	7'-3"	6'-6"	5'-11"	5'-6"
130.0	5'-6"	4'-8"	6'-9"	5'-4"	8'-3"	7'-2"	6'-5"	5'-10"	5'-5"
135.0	5'-5"	4'-7"	6'-8"	5'-3"	8'-1"	7'-0"	6'-3"	5'-9"	5'-4"
140.0	5'-3"	4'-6"	6'-6"	5'-2"	7'-11"	6'-11"	6'-2"	5'-7"	5'-2"
145.0	5'-2"	4'-5"	6'-5"	5'-1"	7'-10"	6'-9"	6'-1"	5'-6"	5'-1"
150.0	5'-1"	4'-4"	6'-4"	5'-0"	7'-8"	6'-8"	5'-11"	5'-5"	5'-0"
155.0	5'-0"	4'-3"	6'-2"	4'-11"	7'-7"	6'-6"	5'-10"	5'-4"	4'-11"
160.0	4'-11"	4'-2"	6'-1"	4'-10"	7'-5"	6'-5"	5'-9"	5'-3"	4'-10"
165.0	4'-10"	4'-1"	6'-0"	4'-9"	7'-4"	6'-4"	5'-8"	5'-2"	4'-9"
170.0	4'-10"	4'-1"	5'-11"	4'-8"	7'-3"	6'-3"	5'-7"	5'-1"	4'-10"
175.0	4'-9"	4'-0"	5'-10"	4'-7"	7'-1"	6'-2"	5'-6"	5'-0"	4'-8"
180.0	4'-8"	3'-11"	5'-9"	4'-7"	7'-0"	6'-1"	5'-5"	4'-11"	4'-7"
185.0	4'-7"	3'-11"	5'-8"	4'-6"	6'-11"	6'-0"	5'-4"	4'-11"	4'-6"
190.0	4'-6"	3'-10"	5'-7"	4'-5"	6'-10"	5'-11"	5'-3"	4'-10"	4'-6"
195.0	4'-6"	3'-9"	5'-6"	4'-4"	6'-9"	5'-10"	5'-3"	4'-9"	4'-5"

PRODUCT REVISED
as complying with the Florida
Building Code
Acceptance No 09-0527.06
Expiration Date June 07/2014
By
Miami Dade Product Control
Division

Florida Building Code (High Velocity Hurricane Zone)

JUN 01 2009

© 2009 TILTECO INC.

TILTECO INC.
TILLIT TESTING & ENGINEERING COMPANY
6355 N.W. 36th. St., Ste. 305, VIRGINIA GARDENS, Fl. 33166
Phone : (305)871-1530 . Fax : (305)871-1531
e-mail: tilteco@aol.com
EB-0006719
WALTER A. TILLIT Jr. P.E.
FLORIDA Lic. # 44167

60mm SLAT ROLL-UP SHUTTER

ROLLINGSHIELD, INC.
(N.S.A.# 1)
2500 N.W. 74th AVE.
MIAMI, FL. 33122
Phone : (305)436-6661 . Fax : (305)436-5523

REV. No	DESCRIPTION	DATE	REV. No	DESCRIPTION	DATE
1	OLD 05-218	4/3/09			
2					

DRAWN BY: L.G.

4/3/09 DATE

09-041 DRAWING No

SHEET 15 OF 16

MULLION LOADING CHART

MAXIMUM DESIGN PRESSURE RATING "W" (p. s. f.) AND CORRESPONDING MAXIMUM SPAN "L"(Ft) FOR A GIVEN TYPE OF MULLION AND MULLION SPACING (Ft.).

(USE MAXIMUM VALUES BETWEEN POSITIVE AND NEGATIVE LOADS)

MAXIMUM DESIGN LOAD "W" (p.s.f.)	(N) TYPE 1 MULLION 3" x 4" x 1/8"				(O) TYPE 2 MULLION 4" x 4" x 1/4"				(P) TYPE 3 MULLION 4" x 6" x .250"					
	MULLION SPACING				MULLION SPACING				MULLION SPACING					
	≤ 4'-0"	4' TO 5'	5' TO 6'	6' TO 8'	≤ 4'-0"	4' TO 5'	5' TO 6'	6' TO 8'	≤ 4'-0"	4' TO 5'	5' TO 6'	6' TO 8'	8' TO 10'	10' TO 12'
40.0	9'-0"	8'-4"	7'-10"	8'-2"	11'-9"	10'-11"	10'-3"	10'-9"	16'-4"	15'-2"	14'-3"	14'-10"	13'-10"	13'-0"
45.0	8'-8"	8'-0"	7'-7"	7'-10"	11'-4"	10'-6"	9'-11"	10'-4"	15'-8"	14'-7"	13'-8"	14'-4"	13'-3"	12'-6"
50.0	8'-4"	7'-9"	7'-3"	7'-7"	10'-11"	10'-2"	9'-7"	10'-0"	15'-2"	14'-1"	13'-3"	13'-10"	12'-10"	12'-1"
55.0	8'-1"	7'-6"	7'-1"	7'-4"	10'-7"	9'-10"	9'-3"	9'-8"	14'-8"	13'-7"	12'-10"	13'-4"	12'-5"	11'-8"
60.0	7'-10"	7'-3"	6'-10"	7'-2"	10'-3"	9'-7"	9'-0"	9'-5"	14'-3"	13'-3"	12'-5"	13'-0"	12'-1"	11'-4"
65.0	7'-8"	7'-1"	6'-8"	7'-0"	10'-0"	9'-4"	8'-9"	9'-2"	13'-11"	12'-11"	12'-2"	12'-8"	11'-9"	11'-1"
70.0	7'-5"	6'-11"	6'-6"	6'-10"	9'-9"	9'-1"	8'-6"	8'-11"	13'-7"	12'-7"	11'-10"	12'-4"	11'-5"	10'-9"
75.0	7'-3"	6'-9"	6'-4"	6'-8"	9'-7"	8'-10"	8'-4"	8'-8"	13'-3"	12'-3"	11'-7"	12'-1"	11'-2"	10'-6"
80.0	7'-2"	6'-7"	6'-3"	6'-6"	9'-4"	8'-8"	8'-2"	8'-6"	12'-11"	12'-0"	11'-4"	11'-10"	10'-11"	10'-4"
85.0	7'-0"	6'-6"	6'-1"	6'-4"	9'-2"	8'-6"	8'-0"	8'-4"	12'-8"	11'-9"	11'-1"	11'-7"	10'-9"	10'-1"
90.0	6'-10"	6'-4"	6'-0"	6'-3"	9'-0"	8'-4"	7'-10"	8'-2"	12'-5"	11'-7"	10'-11"	11'-4"	10'-6"	9'-11"
95.0	6'-9"	6'-3"	5'-10"	6'-2"	8'-10"	8'-2"	7'-9"	8'-1"	12'-3"	11'-4"	10'-8"	11'-2"	10'-4"	9'-9"
100.0	6'-7"	6'-2"	5'-9"	6'-0"	8'-8"	8'-1"	7'-7"	7'-11"	12'-0"	11'-2"	10'-6"	10'-11"	10'-2"	9'-7"
105.0	6'-6"	6'-1"	5'-7"	5'-11"	8'-6"	7'-11"	7'-6"	7'-9"	11'-10"	11'-0"	10'-4"	10'-9"	–	–
110.0	6'-5"	5'-11"	5'-5"	5'-10"	8'-5"	7'-10"	7'-4"	7'-8"	11'-8"	10'-10"	10'-2"	10'-7"	–	–
115.0	6'-4"	5'-10"	5'-4"	5'-8"	8'-3"	7'-8"	7'-3"	7'-7"	11'-6"	10'-8"	10'-0"	10'-5"	–	–
120.0	6'-3"	5'-9"	5'-3"	5'-7"	8'-2"	7'-7"	7'-2"	7'-5"	11'-4"	10'-6"	9'-11"	10'-4"	–	–
125.0	6'-2"	5'-7"	5'-1"	5'-5"	8'-1"	7'-6"	7'-0"	7'-4"	11'-2"	10'-4"	9'-9"	10'-2"	–	–
130.0	6'-1"	5'-6"	5'-0"	5'-4"	7'-11"	7'-5"	6'-11"	7'-3"	11'-0"	10'-3"	9'-8"	10'-0"	–	–
135.0	6'-0"	5'-5"	4'-11"	5'-3"	7'-10"	7'-3"	6'-10"	7'-2"	10'-11"	10'-1"	9'-6"	9'-11"	–	–
140.0	5'-11"	5'-3"	4'-10"	5'-2"	7'-9"	7'-2"	6'-9"	7'-1"	10'-9"	10'-0"	9'-5"	9'-10"	–	–
145.0	5'-10"	5'-2"	4'-9"	5'-1"	7'-8"	7'-1"	6'-8"	7'-0"	10'-7"	9'-10"	9'-3"	9'-8"	–	–
150.0	5'-9"	5'-1"	4'-8"	5'-0"	7'-7"	7'-0"	6'-7"	6'-11"	10'-6"	9'-9"	9'-2"	9'-7"	–	–
155.0	5'-7"	5'-0"	4'-7"	4'-11"	7'-6"	7'-0"	6'-7"	6'-10"	10'-5"	9'-8"	9'-1"	9'-6"	–	–
160.0	5'-6"	4'-11"	4'-6"	4'-10"	7'-5"	6'-11"	6'-6"	6'-9"	10'-3"	9'-7"	9'-0"	9'-4"	–	–
165.0	5'-5"	4'-10"	4'-5"	4'-9"	7'-4"	6'-10"	6'-5"	6'-8"	10'-2"	9'-5"	8'-11"	9'-3"	–	–
170.0	5'-4"	4'-10"	4'-5"	4'-8"	7'-3"	6'-9"	6'-4"	6'-8"	10'-1"	9'-4"	8'-9"	9'-2"	–	–
175.0	5'-3"	4'-9"	4'-4"	4'-7"	7'-2"	6'-8"	6'-4"	6'-7"	10'-0"	9'-3"	8'-8"	9'-1"	–	–
180.0	5'-3"	4'-8"	4'-3"	4'-6"	7'-2"	6'-7"	6'-3"	6'-6"	9'-11"	9'-2"	8'-6"	9'-0"	–	–
185.0	5'-2"	4'-7"	4'-2"	4'-6"	7'-1"	6'-7"	6'-2"	6'-5"	9'-10"	9'-1"	8'-5"	8'-11"	–	–
190.0	5'-1"	4'-6"	4'-2"	4'-5"	7'-0"	6'-6"	6'-1"	6'-5"	9'-9"	9'-0"	8'-3"	8'-10"	–	–
195.0	5'-0"	4'-6"	4'-1"	4'-4"	6'-11"	6'-5"	6'-1"	6'-4"	9'-8"	8'-11"	8'-2"	8'-9"	–	–

NOTES : REFER TO ELEVATIONS ON SHEET 1A OF 16

1-. FOR MULLIONS INSTALLED W/O STORM BARS

A) MULLION SPACING SHALL BE SUCH THAT MAXIMUM SLAT SPAN SHALL NOT BE EXCEEDED

2-. FOR MULLIONS INSTALLED W/ STORM BARS & HEADERS

A) MULLION SPACING SHALL BE SUCH THAT MAXIMUM HEADER SPAN SHALL NOT BE EXCEEDED

B) STORM BAR SPACING SHALL BE SUCH THAT MAXIMUM SLAT SPAN SHALL NOT BE EXCEEDED

JUN 0 1 2009

PRODUCT REVISED
as complying with the Florida
Building Code
Acceptance No 09-0527.06
Expiration Date June 07, 2014
By
Miami Dade Product Control
Division

Florida Building Code (High Velocity Hurricane Zone)

© 2009 TILTECO INC.

TILTECO INC.
TILLIT TESTING & ENGINEERING COMPANY
6355 N.W. 36th. St., Ste. 305, VIRGINIA GARDENS, Fl. 33166
Phone : (305)871-1530 . Fax : (305)871-1531
e-mail: tilteco@aol.com
EB-0006719
WALTER A. TILLIT Jr. P.E.
FLORIDA Lic. # 44167

60mm SLAT ROLL-UP SHUTTER

ROLLINGSHIELD, INC.
(N.S.A.# 1)
2500 N.W. 74th AVE.
MIAMI, FL. 33122
Phone : (305)436-6661 . Fax : (305)436-5523

REV. No	DESCRIPTION	DATE	REV. No	DESCRIPTION	DATE
1	OLD 05-218	4/3/09			
2					

DRAWN BY: L.G.
4/3/09 DATE
09-041 DRAWING No
SHEET 16 OF 16