MIAMI-DADE COUNTY
BUILDING CODE COMPLIANCE OFFICE (BCCO)
PRODUCT CONTROL DIVISION

MIAMI-DADE COUNTY, FLORIDA
METRO-DADE FLAGLER BUILDING
140 WEST FLAGLER STREET, SUITE 1603
MIAMI, FLORIDA 33130-1563
(305) 375-2901 FAX (305) 375-2908
www.miamidade.gov/buildingcode

NOTICE OF ACCEPTANCE (NOA)

Innovative Window Concepts, L.L.C.
505 Industrial Way
Boynton Beach, FL 33426

SCOPE:

This NOA is being issued under the applicable rules and regulations governing the use of construction materials. The documentation submitted has been reviewed by Miami-Dade County Product Control Division and accepted by the Board of Rules and Appeals (BORA) to be used in Miami Dade County and other areas where allowed by the Authority Having Jurisdiction (AHJ).

This NOA shall not be valid after the expiration date stated below. The Miami-Dade County Product Control Division (In Miami Dade County) and/or the AHJ (in areas other than Miami Dade County) reserve the right to have this product or material tested for quality assurance purposes. If this product or material fails to perform in the accepted manner, the manufacturer will incur the expense of such testing and the AHJ may immediately revoke, modify, or suspend the use of such product or material within their jurisdiction. BORA reserves the right to revoke this acceptance, if it is determined by Miami-Dade County Product Control Division that this product or material fails to meet the requirements of the applicable building code.

This product is approved as described herein, and has been designed to comply with the Florida Building Code, including High Velocity Hurricane Zone of the Florida Building Code.

DESCRIPTION: Series 3040/3062 Aluminum Fixed Window -Impact

APPROVAL DOCUMENT: Drawing No. **W04-04**, titled "Aluminum Fixed Window (L. M. I.)", sheets 1 through 5 of 5, prepared by Al Farooq Corporation, dated 01-14-04 and last revised on July 29, 2009, signed and sealed by Arshad Viqar, P.E., bearing the Miami-Dade County Product Control renewal stamp with the Notice of Acceptance number and expiration date by the Miami-Dade County Product Control Division.

MISSILE IMPACT RATING: Large and Small Missile Impact Resistant

LABELING: Each unit shall bear a permanent label with the manufacturer's name or logo, city, state and following statement: "Miami-Dade County Product Control Approved", unless otherwise noted herein.

RENEWAL of this NOA shall be considered after a renewal application has been filed and there has been no change in the applicable building code negatively affecting the performance of this product.

TERMINATION of this NOA will occur after the expiration date or if there has been a revision or change in the materials, use, and/or manufacture of the product or process. Misuse of this NOA as an endorsement of any product, for sales, advertising or any other purposes shall automatically terminate this NOA. Failure to comply with any section of this NOA shall be cause for termination and removal of NOA.

ADVERTISEMENT: The NOA number preceded by the words Miami-Dade County, Florida, and followed by the expiration date may be displayed in advertising literature. If any portion of the NOA is displayed, then it shall be done in its entirety.

INSPECTION: A copy of this entire NOA shall be provided to the user by the manufacturer or its distributors and shall be available for inspection at the job site at the request of the Building Official.

This NOA **revises & renews** NOA # **05-0706.05** consists of this page 1 and evidence sheet E-1 as well as approval document mentioned above.

The submitted documentation was reviewed by **Ishaq I. Chanda, P.E.**

MIAMI-DADE COUNTY APPROVED

8
7/5/9

Innovative Window Concepts, L.L.C.

NOTICE OF ACCEPTANCE: EVIDENCE SUBMITTED

A. DRAWINGS (transferred from file # **05-0706.05**)

1. Manufacturer's die drawings and sections.
2. Drawing No. **W04-04**, titled "Aluminum Fixed Window (L. M. I.)", sheets 1 through 5 of 5, prepared by Al Farooq Corporation, dated 01-14-04 and last revised on July 29, 2009, signed and sealed by Arshad Viqar, P. E.

B. TESTS (transferred from file # **05-0706.05**)

1. Test reports on
   1) Air Infiltration Test, per FBC, TAS 202-94
   2) Water Infiltration Resistant Test per FBC TAS 202-94
   3) Uniform Static Air Pressure Test, Loading per FBC TAS 202-94
   4) Large Missile Impact Test per FBC, TAS 201-94
   5) Cyclic Wind Pressure Loading per FBC, TAS 203-94

   along with marked-up drawings and installation diagram of Series3040 and 3062 aluminum fixed "picture" window, prepared by American Test Lab of South Florida, Test Report No. **ATL-0530.01-03**, dated 06/25/03, signed and sealed by William R. Mehner, P.E. and Henry Hattem, P. E.

C. CALCULATIONS

1. Anchor verification, comparative and structural analysis, prepared by AL- Farooq Corporation, dated 07/17/09, signed and sealed by Arshad Viqar, P.E.
2. Glazing complies w/ ASTME-1300-02 & -04

D. QUALITY ASSURANCE

1. Miami Dade /Building Code Compliance Office (BCCO).

E. MATERIAL CERTIFICATIONS

1. Notice of Acceptance No. **07-1116.04** issued to E.I. DuPont DeNemours for "SentryGlasPlus", expiring on 01/14/2012.
2. Notice of Acceptance No. **06-0216.06** issued to Solutia, for "Saflex IIIG clear & color interlayer", expiring on 05/21/2011.

F. STATEMENTS

1. Statement letter of code compliance and "No financial interest" dated 06-25-09, signed and sealed by Arshad Viqar, P.E.
2. Statement letter of Lab compliance, as a part of above referenced test reports

G. OTHER

1. This NOA **revises** & **renews** NOA # **05-0706.05,** expiring 08-26-09.

Ishaq I. Chanda

Ishaq I. Chanda, P. E.
Product Control Examiner
NOA No 09-0527.09
Expiration Date: August 26, 2014
Approval Date: August 26, 2009

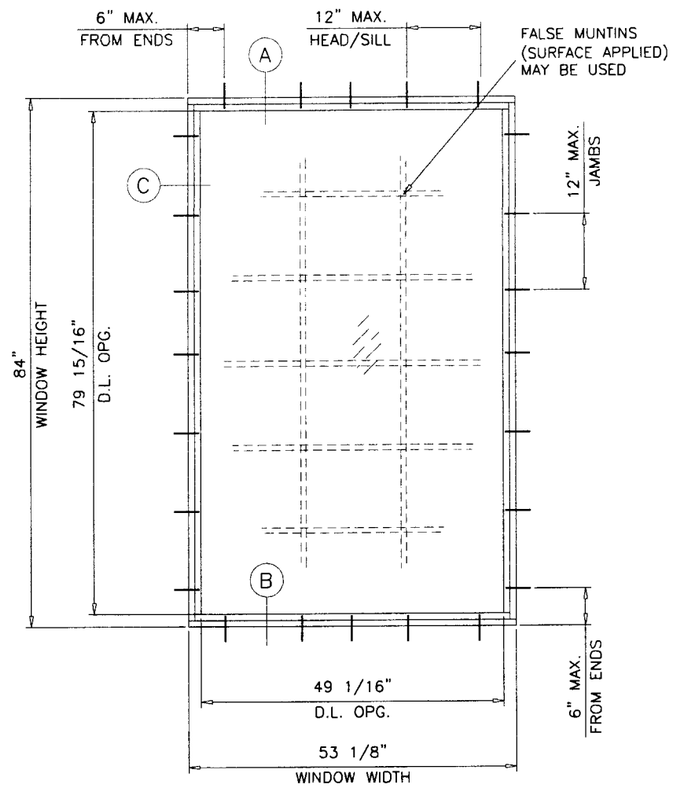

TYPICAL ELEVATION

TESTED UNIT

DAYLITE OPENINGS:
D.L.O. HEIGHT = WINDOW HEIGHT – 4.062"
D.L.O. WIDTH = WINDOW WIDTH – 4.062"

THESE WINDOWS ARE RATED FOR LARGE & SMALL MISSILE IMPACT. SHUTTERS ARE NOT REQUIRED.

ALUMINUM FIXED WINDOW (L.M.I.)

DESIGN LOAD RATINGS FOR THESE WINDOWS TO BE AS PER CHARTS SHOWN ON SHEETS 2 & 3.

APPROVAL APPLIES TO SINGLE UNITS OR SIDE BY SIDE COMBINATIONS OF FIX./FIX. OR FIXED WITH OTHER WINDOW TYPES IN MODULES OF TWO OR MORE WINDOWS USING MIAMI–DADE COUNTY APPROVED MULLIONS IN BETWEEN. LOWER DESIGN PRESSURE FROM WINDOWS OR MULLION APPROVAL WILL APPLY TO ENTIRE SYSTEM.

THIS PRODUCT HAS BEEN DESIGNED AND TESTED TO COMPLY WITH THE REQUIREMENTS OF THE FLORIDA BUILDING CODE 2007 EDITION INCLUDING HIGH VELOCITY HURRICANE ZONE (HVHZ).

1BY OR 2BY WOOD BUCKS BY OTHERS, MUST BE ANCHORED PROPERLY TO TRANSFER LOADS TO THE STRUCTURE.

ANCHORS SHALL BE AS LISTED, SPACED AS SHOWN ON DETAILS, ANCHORS EMBEDMENT TO BASE MATERIAL SHALL BE BEYOND WALL DRESSING OR STUCCO.

ANCHORING OR LOADING CONDITIONS NOT SHOWN IN THESE DETAILS ARE NOT PART OF THIS APPROVAL.

A LOAD DURATION INCREASE IS USED IN DESIGN OF ANCHORS INTO WOOD ONLY.

MATERIALS INCLUDING BUT NOT LIMITED TO STEEL/METAL SCREWS, THAT COME INTO CONTACT WITH OTHER DISSIMILAR MATERIALS SHALL MEET THE REQUIREMENTS OF 2007 FLORIDA BLDG. CODE SECTION 2003.8.4.

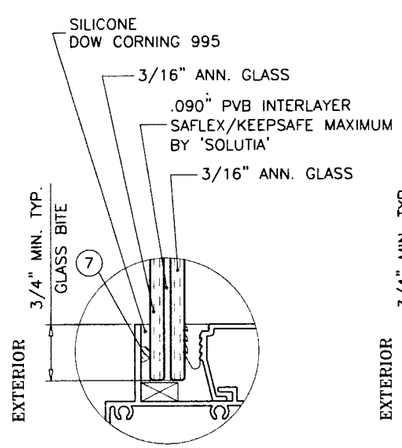

SERIES 3040
GLAZING OPTION 'A'

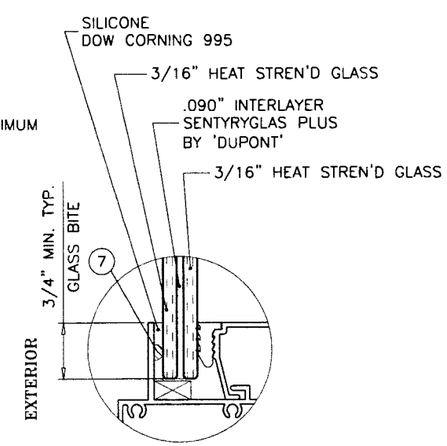

SERIES 3062
GLAZING OPTION 'B'

GLAZING OPTIONS

PRODUCT RENEWED
as complying with the Florida Building Code
Acceptance No 09-0527.09
Expiration Date AUG 26, 2014
By Ishaq I. Chanda
Miami-Dade Product Control Division

Engr: ARSHAD VIQAR
CIVIL
FLA. PE # 38863
C.A.N. 3538

JUL 29 2009

AL-FAROOQ CORPORATION
ENGINEERS & PRODUCT DEVELOPMENT
1235 S.W. 87 AVE
MIAMI, FLORIDA 33174
TEL. (305) 264-8100 FAX. (305) 262-6978
COMP-ANL\W04-04IWS

ALUMINUM FIXED WINDOW (L.M.I.)

INNOVATIVE WINDOW CONCEPTS
505 INDUSTRIAL WAY
BOYNTON BEACH, FL. 33426
TEL. (561) 493-2303 FAX. (561) 493-2302

revisions:

no	date	by	description
A	05.21.05		LOAD CAPACITY CHART REV.
B	04.23.09		UPDATED FOR 2007 FBC
C	07.23.09		REV. PER BCCO COMMENTS

date: 01-14-04
scale: 1/2"=1'-0"
dr. by: HAMID
chk. by:

drawing no.
W04-04

DESIGN LOAD CAPACITY - PSF			
		GLAZING OPTION 'A'	
		SERIES 3040	
WINDOW DIMS.		ANCHORS 'A'	
WIDTH	LENGTH	EXT.(+)	INT.(-)
19-1/8"	26" (3)	62.0	62.0
24"		62.0	62.0
26-1/2"		62.0	62.0
32"		62.0	62.0
37"		62.0	62.0
40"		62.0	62.0
48"		62.0	62.0
53-1/8"		62.0	62.0
60"		62.0	62.0
76"		62.0	62.0
19-1/8"	38-3/8" (4)	62.0	62.0
24"		62.0	62.0
26-1/2"		62.0	62.0
32"		62.0	62.0
37"		62.0	62.0
40"		59.8	59.8
48"		59.8	59.8
53-1/8"		59.8	59.8
60"		59.8	59.8
73"		59.8	59.8
19-1/8"	50-5/8" (5)	62.0	62.0
24"		62.0	62.0
26-1/2"		62.0	62.0
32"		62.0	62.0
37"		62.0	62.0
40"		57.4	57.4
48"		47.8	47.8
53-1/8"		45.3	45.3
55"		45.3	45.3
19-1/8"	63" (6)	62.0	62.0
24"		62.0	62.0
26-1/2"		62.0	62.0
32"		62.0	62.0
37"		62.0	62.0
40"		57.4	57.4
44"		52.1	52.1
19-1/8"	76" (7)	62.0	62.0
24"		62.0	62.0
26-1/2"		62.0	62.0
32"		62.0	62.0
37"		62.0	62.0

( ) INDICATE NO. OF ANCHORS FOR SHOWN DIMENSION

DESIGN LOAD CAPACITY - PSF					
		GLAZING OPTION 'B'			
		SERIES 3062			
WINDOW DIMS.		ANCHORS 'A'		ANCHORS 'B'	
WIDTH	LENGTH	EXT.(+)	INT.(-)	EXT.(+)	INT.(-)
19-1/8"	26" (3)	90.0	120.0	90.0	120.0
24"		90.0	120.0	90.0	120.0
26-1/2"		90.0	120.0	90.0	120.0
32"		90.0	120.0	90.0	120.0
37"		90.0	120.0	90.0	120.0
40"		90.0	120.0	90.0	120.0
48"		90.0	120.0	90.0	120.0
53-1/8"		90.0	120.0	90.0	120.0
60"		90.0	120.0	90.0	120.0
76"		90.0	120.0	90.0	120.0
19-1/8"	38-3/8" (4)	90.0	120.0	90.0	120.0
24"		90.0	120.0	90.0	120.0
26-1/2"		90.0	120.0	90.0	120.0
32"		90.0	120.0	90.0	120.0
37"		90.0	120.0	90.0	120.0
40"		90.0	120.0	90.0	120.0
48"		90.0	120.0	90.0	120.0
53-1/8"		90.0	120.0	90.0	120.0
60"		90.0	117.7	90.0	120.0
76"		90.0	118.4	90.0	120.0
19-1/8"	50-5/8" (5)	90.0	120.0	90.0	120.0
24"		90.0	120.0	90.0	120.0
26-1/2"		90.0	120.0	90.0	120.0
32"		90.0	120.0	90.0	120.0
37"		90.0	120.0	90.0	120.0
40"		90.0	120.0	90.0	120.0
48"		90.0	120.0	90.0	120.0
53-1/8"		90.0	120.0	90.0	120.0
60"		90.0	105.0	90.0	120.0
66"		88.6	107.4	88.6	118.1
76"		70.0	76.4	–	–
19-1/8"	63" (6)	90.0	120.0	90.0	120.0
24"		90.0	120.0	90.0	120.0
26-1/2"		90.0	120.0	90.0	120.0
32"		90.0	120.0	90.0	120.0
37"		90.0	120.0	90.0	120.0
40"		90.0	118.2	90.0	120.0
48"		90.0	114.3	90.0	120.0
53-1/8"		90.0	114.3	90.0	120.0
60"		70.0	67.6	–	–
70"		70.0	64.4	–	–
19-1/8"	76" (7)	90.0	120.0	90.0	120.0
24"		90.0	120.0	90.0	120.0
26-1/2"		90.0	120.0	90.0	120.0
32"		90.0	120.0	90.0	120.0
37"		90.0	120.0	90.0	120.0
40"		90.0	115.2	90.0	120.0
44"		88.5	108.6	88.5	117.9
48"		70.0	76.4	–	–
53-1/8"		70.0	76.4	–	–
58"		70.0	70.0	–	–

( ) INDICATE NO. OF ANCHORS FOR SHOWN DIMENSION

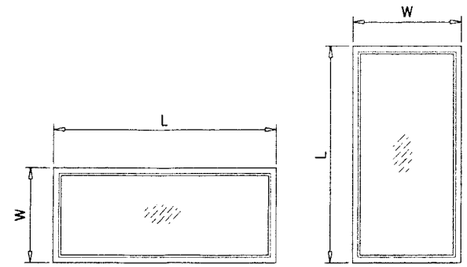

NOTE:
WIDTH AND LENGTH DIMENSIONS CAN BE ORIENTED VERTICALLY OR HORIZONTALLY AS SHOWN ABOVE.

NOTE:
GLASS CAPACITIES ON THIS SHEET ARE BASED ON ASTM E1300-02/04 (3 SEC. GUSTS).

PRODUCT RENEWED
as complying with the Florida Building Code
Acceptance No 09-0527.09
Expiration Date AUG 26, 2014
By Ishaq I. Chanda
Miami-Dade Product Control Division

Engr: ARSHAD VIQAR
CIVIL
FLA. PE # 38863
C.A.N. 3538

JUL 29 2009

AL-FAROOQ CORPORATION
ENGINEERS & PRODUCT DEVELOPMENT
1235 S.W. 87 AVE
MIAMI, FLORIDA 33174
TEL. (305) 264-8100 FAX. (305) 262-6978

COMP-ANL\W04-04IWS

ALUMINUM FIXED WINDOW (L.M.I.)

INNOVATIVE WINDOW CONCEPTS
505 INDUSTRIAL WAY
BOYNTON BEACH, FL. 33426
TEL. (561) 493-2303 FAX. (561) 493-2302

revisions:

no	date	by	description
A	05.21.05		LOAD CAPACITY CHART REV.
B	04.23.09		UPDATED FOR 2007 FBC
C	07.23.09		REV. PER BCCO COMMENTS

date: 01-14-04
scale: –
dr. by: HAMID
chk. by:

drawing no.
W04-04

DESIGN LOAD CAPACITY – PSF			
		GLAZING OPTION 'A'	
		SERIES 3040	
WINDOW DIMS.		ANCHORS 'A'	
WIDTH	LENGTH	EXT.(+)	INT.(–)
24"	24" (2)	62.0	62.0
30"		62.0	62.0
36"		62.0	62.0
42"		62.0	62.0
48"		62.0	62.0
54"		62.0	62.0
60"		62.0	62.0
66"		62.0	62.0
72"		62.0	62.0
78"		62.0	62.0
84"		62.0	62.0
24"	36" (3)	62.0	62.0
30"		62.0	62.0
36"		62.0	62.0
42"		62.0	62.0
48"		62.0	62.0
54"		62.0	62.0
60"		62.0	62.0
66"		62.0	62.0
72"		62.0	62.0
78"		62.0	62.0
24"	48" (4)	62.0	62.0
30"		62.0	62.0
36"		62.0	62.0
42"		54.6	54.6
48"		47.8	47.8
54"		47.8	47.8
58"		47.8	47.8
24"	60" (5)	62.0	62.0
30"		62.0	62.0
36"		62.0	62.0
42"		54.6	54.6
46"		49.9	49.9
24"	72" (6)	62.0	62.0
30"		62.0	62.0
36"		62.0	62.0
39"		58.8	58.8
24"	84" (7)	62.0	62.0
30"		62.0	62.0
33"		62.0	62.0
24"	96" (8)	62.0	62.0
30"		62.0	62.0

( ) INDICATE NO. OF ANCHORS FOR SHOWN DIMENSION

DESIGN LOAD CAPACITY – PSF					
		GLAZING OPTION 'B'			
		SERIES 3062			
WINDOW DIMS.		ANCHORS 'A'		ANCHORS 'B'	
WIDTH	LENGTH	EXT.(+)	INT.(–)	EXT.(+)	INT.(–)
24"	24" (2)	90.0	120.0	90.0	120.0
30"		90.0	120.0	90.0	120.0
36"		90.0	120.0	90.0	120.0
42"		90.0	120.0	90.0	120.0
48"		90.0	120.0	90.0	120.0
54"		90.0	120.0	90.0	120.0
60"		90.0	120.0	90.0	120.0
66"		90.0	120.0	90.0	120.0
72"		90.0	120.0	90.0	120.0
78"		90.0	120.0	90.0	120.0
84"		90.0	120.0	90.0	120.0
24"	36" (3)	90.0	120.0	90.0	120.0
30"		90.0	120.0	90.0	120.0
36"		90.0	120.0	90.0	120.0
42"		90.0	120.0	90.0	120.0
48"		90.0	120.0	90.0	120.0
54"		90.0	120.0	90.0	120.0
60"		90.0	120.0	90.0	120.0
66"		90.0	120.0	90.0	120.0
72"		90.0	113.8	90.0	120.0
78"		90.0	119.5	90.0	120.0
84"		90.0	108.6	90.0	120.0
24"	48" (4)	90.0	120.0	90.0	120.0
30"		90.0	120.0	90.0	120.0
36"		90.0	120.0	90.0	120.0
42"		90.0	120.0	90.0	120.0
48"		90.0	120.0	90.0	120.0
54"		90.0	120.0	90.0	120.0
60"		90.0	106.7	90.0	120.0
66"		90.0	109.7	90.0	120.0
69"		88.3	102.4	88.3	117.8
72"		70.0	76.4	–	–
78"		70.0	76.4	–	–
84"		70.0	76.4	–	–
24"	60" (5)	90.0	120.0	90.0	120.0
30"		90.0	120.0	90.0	120.0
36"		90.0	120.0	90.0	120.0
42"		90.0	112.5	90.0	120.0
48"		90.0	106.7	90.0	120.0
54"		88.5	103.4	88.5	118.1
55"		86.9	103.1	86.9	115.9
60"		70.0	67.6	–	–
66"		70.0	67.6	–	–
72"		70.0	67.6	–	–
74"		70.0	67.6	–	–

DESIGN LOAD CAPACITY – PSF					
		GLAZING OPTION 'B'			
		SERIES 3062			
WINDOW DIMS.		ANCHORS 'A'		ANCHORS 'B'	
WIDTH	LENGTH	EXT.(+)	INT.(–)	EXT.(+)	INT.(–)
24"	72" (6)	90.0	120.0	90.0	120.0
30"		90.0	120.0	90.0	120.0
36"		90.0	113.8	90.0	120.0
42"		90.0	103.3	90.0	120.0
46"		88.3	98.1	88.3	117.8
48"		70.0	76.4	–	–
54"		70.0	75.2	–	–
60"		70.0	67.6	–	–
61"		70.0	66.5	–	–
24"	84" (7)	90.0	120.0	90.0	120.0
30"		90.0	120.0	90.0	120.0
36"		90.0	108.6	90.0	120.0
39"		90.0	102.6	90.0	120.0
42"		70.0	76.4	–	–
48"		70.0	76.4	–	–
53"		70.0	76.4	–	–
24"	96" (8)	90.0	120.0	90.0	120.0
30"		90.0	120.0	90.0	120.0
34"		90.0	109.8	90.0	120.0
36"		70.0	76.4	–	–
42"		70.0	76.4	–	–
46"		70.0	76.4	–	–

( ) INDICATE NO. OF ANCHORS FOR SHOWN DIMENSION

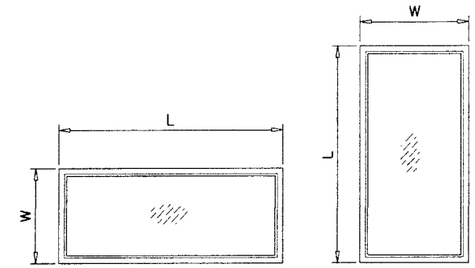

NOTE:
WIDTH AND LENGTH DIMENSIONS CAN BE ORIENTED VERTICALLY OR HORIZONTALLY AS SHOWN ABOVE.

NOTE:
GLASS CAPACITIES ON THIS SHEET ARE BASED ON ASTM E1300-02/04 (3 SEC. GUSTS).

PRODUCT RENEWED
as complying with the Florida Building Code
Acceptance No. 09-0527.09
Expiration Date 04.26.2014
By Ishaq I. Chanda
Miami-Dade Product Control Division

Engr: ARSHAD VIQAR
CIVIL
FLA. PE # 38863
C.A.N. 3538

JUL 29 2009

AL-FAROOQ CORPORATION
ENGINEERS & PRODUCT DEVELOPMENT
1235 S.W. 87 AVE
MIAMI, FLORIDA 33174
TEL. (305) 264-8100 FAX. (305) 262-6978

COMP-ANL\W04-04\WS

ALUMINUM FIXED WINDOW (L.M.I.)

INNOVATIVE WINDOW CONCEPTS
505 INDUSTRIAL WAY
BOYNTON BEACH, FL. 33426
TEL. (561) 493-2303 FAX. (561) 493-2302

revisions:

no	date	by	description
A	05.21.05		LOAD CAPACITY CHART REV.
B	04.23.09		UPDATED FOR 2007 FBC
C	07.23.09		REV. PER BCCO COMMENTS

date: 01-14-04
scale: –
dr. by: HAMID
chk. by:

drawing no.
W04-04

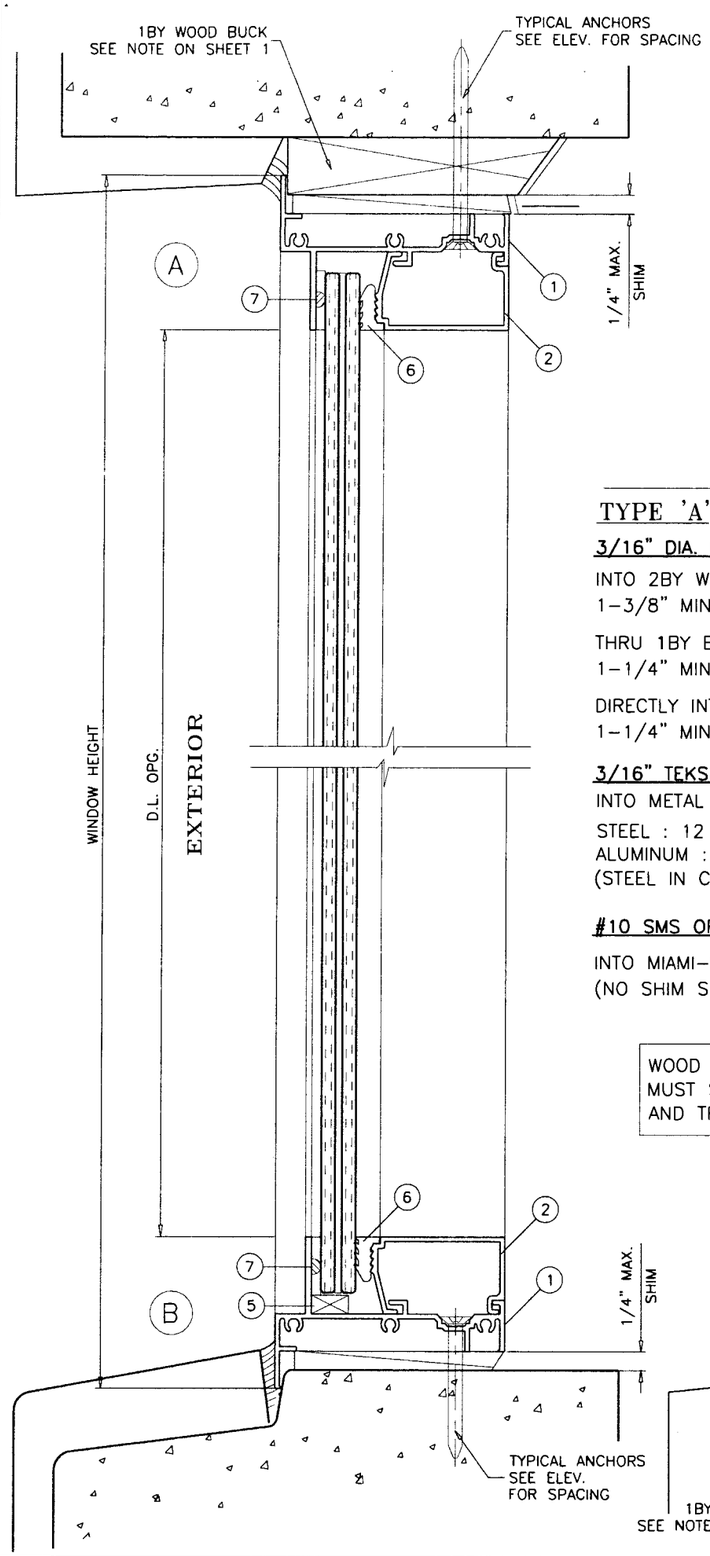

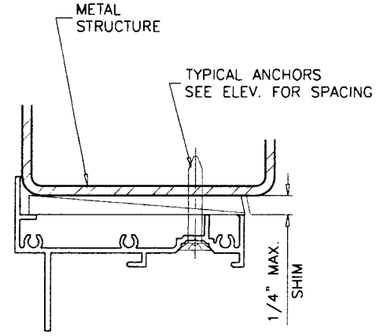

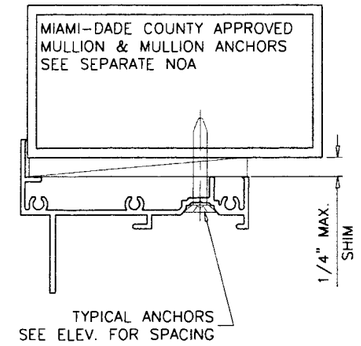

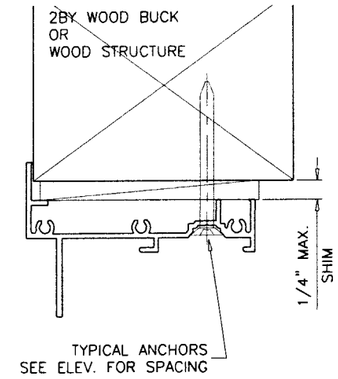

TYPICAL ANCHORS: SEE ELEV. FOR SPACING

TYPE 'A'

3/16" DIA. ULTRACON BY 'ELCO' (Fu=177 KSI, Fy=155 KSI)

INTO 2BY WOOD BUCKS OR WOOD STRUCTURES
1-3/8" MIN. PENETRATION INTO WOOD

THRU 1BY BUCKS INTO CONC. OR MASONRY
1-1/4" MIN. EMBED INTO CONC. OR MASONRY

DIRECTLY INTO CONC. OR MASONRY
1-1/4" MIN. EMBED INTO CONC. OR MASONRY

3/16" TEKS OR SELF DRILLING SCREWS (GRADE 5 CRS)
INTO METAL STRUCTURES

STEEL : 12 GA. MIN. (Fy = 36 KSI MIN.)
ALUMINUM : 1/8" THK. MIN. (6063-T5 MIN.)
(STEEL IN CONTACT WITH ALUMINUM TO BE PLATED OR PAINTED)

#10 SMS OR SELF DRILLING SCREWS

INTO MIAMI-DADE COUNTY APPROVED CLIPPED MULLIONS (MIN. THK. = 1/8")
(NO SHIM SPACE)

TYPE 'B'

1/4" DIA. ULTRACON BY 'ELCO' (Fu=177 KSI, Fy=155 KSI)

INTO 2BY WOOD BUCKS OR WOOD STRUCTURES
1-3/8" MIN. PENETRATION INTO WOOD

THRU 1BY BUCKS INTO CONC. OR MASONRY
1-1/4" MIN. EMBED INTO CONC. OR MASONRY

DIRECTLY INTO CONC. OR MASONRY
1-1/4" MIN. EMBED INTO CONC. OR MASONRY

#14 SMS OR SELF DRILLING SCREWS (GRADE 2 CRS)
INTO METAL STRUCTURES

STEEL : 12 GA. MIN. (Fy = 36 KSI MIN.)
ALUMINUM : 1/8" THK. MIN. (6063-T5 MIN.)
(STEEL IN CONTACT WITH ALUMINUM TO BE PLATED OR PAINTED)

#10 SMS OR SELF DRILLING SCREWS

INTO MIAMI-DADE COUNTY APPROVED CLIPPED MULLIONS (MIN. THK. = 1/8")
(NO SHIM SPACE)

WOOD BUCKS AND METAL STRUCTURE NOT BY I.W.C.
MUST SUSTAIN LOADS IMPOSED BY GLAZING SYSTEM
AND TRANSFER THEM TO THE BUILDING STRUCTURE.

TYPICAL EDGE DISTANCE

INTO CONCRETE AND MASONRY = 1-1/2" MIN.
INTO WOOD STRUCTURE = 1" MIN.
INTO METAL STRUCTURE = 3/4" MIN.

CONCRETE f'c = 3000 PSI MIN.
C-90 HOLLOW/FILLED BLOCK f'm = 2000 PSI MIN.

SEALANT:

ALL JOINTS AND FRAME CONNECTIONS SEALED WITH
SCHNEE MOREHEAD SEAM SEALER SM5504.

PRODUCT RENEWED
as complying with the Florida Building Code
Acceptance No 09-0527.09
Expiration Date AUG 26, 2014
By Ishaq I. Chanda
Miami-Dade Product Control Division

Engr: ARSHAD VIQAR
CIVIL
FLA. PE # 38863
C.A.N. 3538

JUL 29 2009

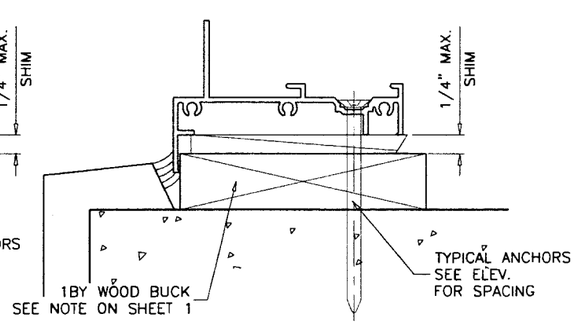

AL-FAROOQ CORPORATION
ENGINEERS & PRODUCT DEVELOPMENT
1235 S.W. 87 AVE
MIAMI, FLORIDA 33174
TEL. (305) 264-8100 FAX. (305) 262-6978

COMP-ANL\W04-04IWS

ALUMINUM FIXED WINDOW (L.M.I.)

INNOVATIVE WINDOW CONCEPTS
505 INDUSTRIAL WAY
BOYNTON BEACH, FL. 33426
TEL. (561) 493-2303 FAX. (561) 493-2302

revisions:

no	date	by	description
A	05.21.05		NO CHANGE THIS SHEET
B	04.23.09		UPDATED FOR 2007 FBC
C	07.23.09		REV. PER BCCO COMMENTS

date: 01-14-04
scale: 1/2" = 1"
dr. by: HAMID
chk. by:

drawing no.
W04-04

ITEM	PART #	QUANTITY	DESCRIPTION	MATERIAL	MANF./SUPPLIER/REMARKS
1	021-024	4	WINDOW FRAME	6063-T5	-
2	021-020	4	GLAZING STOP	6063-T5	-
4	#8 X 1"	2/ CORNER	ASSEMBLY SCREWS	CRS	PH SMS
5	-	2/ LITE	SETTING BLOCK, 1/2" X 1/4" X 1" LONG	NEOPRENE	FRANK LOWE
6	015-007	AS REQD.	GLAZING GASKET	RIGID VINYL	MASTER TOOL
7	015-006	AS REQD.	.105 SPACER	POLYURETHANE	FRANK LOWE

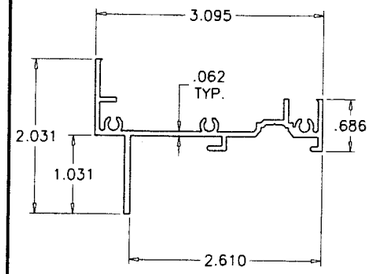

FRAME

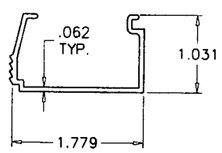

GLAZING STOP

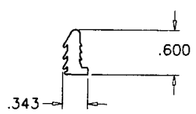

WEDGE GASKET

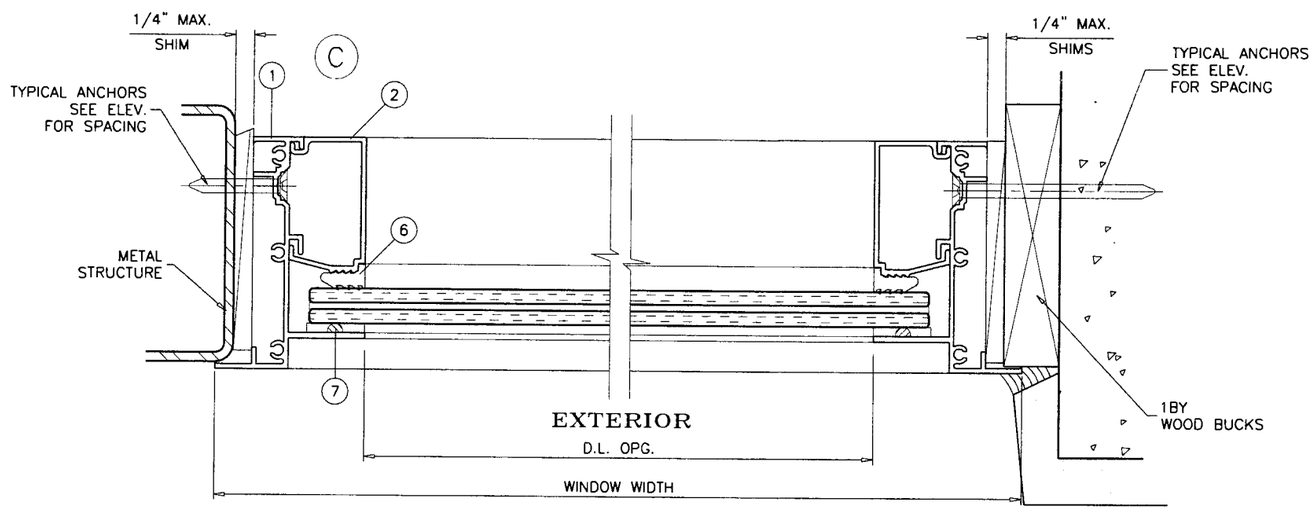

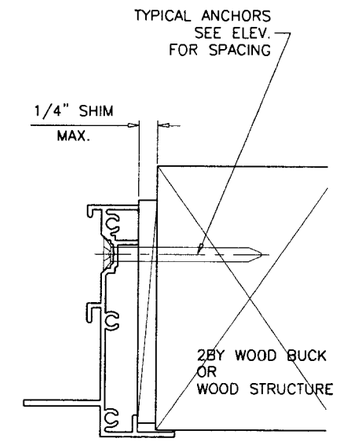

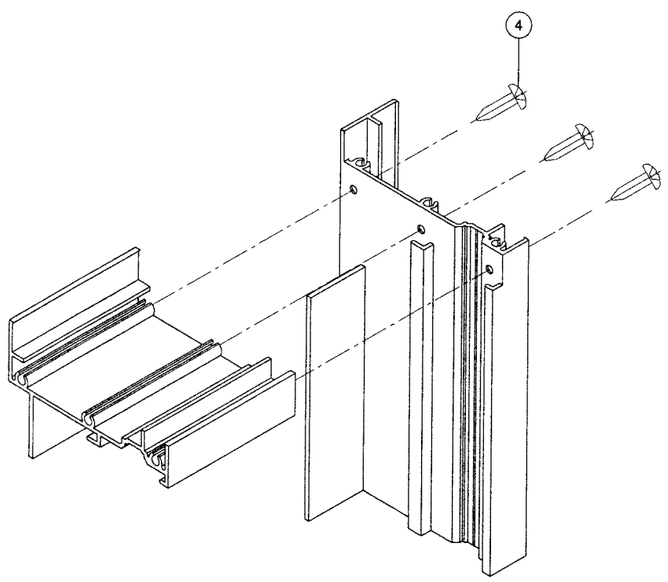

FRAME CORNERS

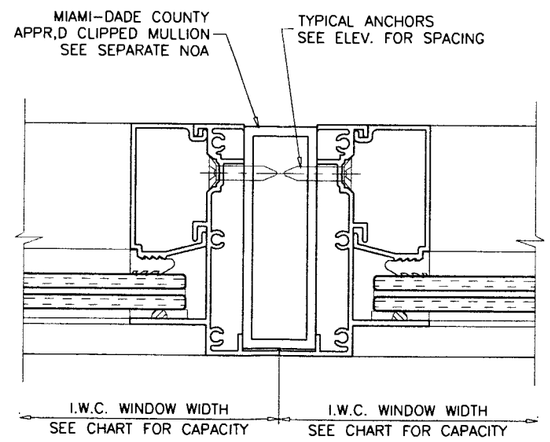

PRODUCT RENEWED
as complying with the Florida
Building Code
Acceptance No. 09-0527.09
Expiration Date Aug 26, 2014
By Ishaq I. Chanda
Miami-Dade Product Control
Division

Engr: ARSHAD ViQAR
CIVIL
FLA. PE # 38863
C.A.N. 3538

JUL 29 2009

AL-FAROOQ CORPORATION
ENGINEERS & PRODUCT DEVELOPMENT
1235 S.W. 87 AVE
MIAMI, FLORIDA 33174
TEL. (305) 264-8100 FAX. (305) 262-6978
COMP-ANL\W04-04IWS

ALUMINUM FIXED WINDOW (L.M.I.)

INNOVATIVE WINDOW CONCEPTS
505 INDUSTRIAL WAY
BOYNTON BEACH, FL. 33426
TEL. (561) 493-2303 FAX. (561) 493-2302

revisions:

no	date	by	description
A	05.21.05		NO CHANGE THIS SHEET
B	04.23.09		UPDATED FOR 2007 FBC
C	07.23.09		REV. PER BCCO COMMENTS

date: 01-14-04
scale: 1/2" = 1"
dr. by: HAMID
chk. by:

drawing no.
W04-04

sheet 5 of 5