MIAMI-DADE COUNTY
BUILDING CODE COMPLIANCE OFFICE (BCCO)
PRODUCT CONTROL DIVISION

MIAMI-DADE COUNTY, FLORIDA
METRO-DADE FLAGLER BUILDING
140 WEST FLAGLER STREET, SUITE 1603
MIAMI, FLORIDA 33130-1563
(305) 375-2901 FAX (305) 375-2908
www.miamidade.gov/buildingcode

NOTICE OF ACCEPTANCE (NOA)

Quality Engineered Products, Co., Inc.
4506 Quality Lane
Tampa, FL 33622

SCOPE:
This NOA is being issued under the applicable rules and regulations governing the use of construction materials. The documentation submitted has been reviewed by Miami-Dade County Product Control Division and accepted by the Board of Rules and Appeals (BORA) to be used in Miami Dade County and other areas where allowed by the Authority Having Jurisdiction (AHJ).

This NOA shall not be valid after the expiration date stated below. The Miami-Dade County Product Control Division (In Miami Dade County) and/or the AHJ (in areas other than Miami Dade County) reserve the right to have this product or material tested for quality assurance purposes. If this product or material fails to perform in the accepted manner, the manufacturer will incur the expense of such testing and the AHJ may immediately revoke, modify, or suspend the use of such product or material within their jurisdiction. BORA reserves the right to revoke this acceptance, if it is determined by Miami-Dade County Product Control Division that this product or material fails to meet the requirements of the applicable building code.

This product is approved as described herein, and has been designed to comply with the Florida Building Code, including High Velocity Hurricane Zone of the Florida Building Code.

DESCRIPTION: Series 16 ga Inswing Single Glazed Commercial Steel Door-Impact

APPROVAL DOCUMENT: Drawing No. **QEP005**, titled "Single Glazed Door (Inswing)", sheets 1 through 6of 6, prepared by manufacturer, dated 10/28/09, signed and sealed by David M. Schonacher, P. E. , bearing the Miami-Dade County Product Control approval stamp with the Notice of Acceptance number and approval date by the Miami-Dade County Product Control Division.

MISSILE IMPACT RATING: Large and Small Missile Impact Resistant

Limitation: 1. Doors are 16 ga (.062" thk) min with min Tensile yield strength of 43.0 ksi
2. Approved EPS core by Dynaplast (Former Apache) or Carpenter Co. having current NOA

LABELING: Each unit shall bear a permanent label with the manufacturer's name or logo, city, state and following statement: "Miami-Dade County Product Control Approved", unless otherwise noted herein.

RENEWAL of this NOA shall be considered after a renewal application has been filed and there has been no change in the applicable building code negatively affecting the performance of this product.

TERMINATION of this NOA will occur after the expiration date or if there has been a revision or change in the materials, use, and/or manufacture of the product or process. Misuse of this NOA as an endorsement of any product, for sales, advertising or any other purposes shall automatically terminate this NOA. Failure to comply with any section of this NOA shall be cause for termination and removal of NOA.

ADVERTISEMENT: The NOA number preceded by the words Miami-Dade County, Florida, and followed by the expiration date may be displayed in advertising literature. If any portion of the NOA is displayed, then it shall be done in its entirety.

INSPECTION: A copy of this entire NOA shall be provided to the user by the manufacturer or its distributors and shall be available for inspection at the job site at the request of the Building Official.
This NOA consists of this page, evidence sheet E-1, as well as, approval document mentioned above.
The submitted documentation was reviewed by **Ishaq I. Chanda, P.E.**

MIAMI-DADE COUNTY APPROVED

11/5/10

NOTICE OF ACCEPTANCE: EVIDENCE SUBMITTED

A. DRAWINGS

1. Manufacturer's die drawings and sections.
2. Drawing No. **QEP005**, titled "Single Glazed Door (Inswing)", sheets 1 through 6of 6, prepared by manufacturer, dated 10/28/09, signed and sealed by David M. Schonacher, signed and sealed by David M. Schonacher, P. E.

B. TESTS

1. Test reports on 1) Air Infiltration Test, per FBC TAS 202-94
   2) Uniform Static Air Pressure Test, Loading per FBC TAS 202.
   3) Water Resistance Test per FBC TAS 202-94 (Not Performed).
   4) Large Missile Impact Test per FBC, TAS 201-94
   5) Cyclic Wind Pressure Loading per FBC, TAS 203-94
   6) Forced Entry Test, per FBC and TAS 202-94

Along with marked-up drawings and installation diagram of Single Outswing /Inswing Flush and Glazed Commercial Steel Doors, prepared by Architect Testing Lab Inc., Test Report No. **84528.01-401-18,** dated May 19, 2009 (This test report was last revised on 11/06/09) , signed and sealed by Joseph A. Reed, P. E

C. CALCULATIONS

1. Anchor verification calculations, dated 06/15/2009 and last revised on 10/28/2009, prepared, signed and sealed by David M. Schonacher, P.E.

D. QUALITY ASSURANCE BY:

1. Miami Dade Building Code Compliance Office (BCCO).

E. MATERIAL CERTIFICATIONS

1. Tensile test report prepared by prepared by Architect Testing, Test Report No. **84528.01-401-18,** tested per ASTM E8-03, dated 11/09/09 signed and sealed by Joseph A. Reed, P. E.
2. Notice of Acceptance No. **07-1107.08** issued to Dyplast Product, LLC (Former Apache Products Company) for "EPS-Expanded Polystyrene Insulation", expiring on 01/11/12.
3. Notice of Acceptance No. **06-1228.07** issued to Carpenter Company for "EPS-Expanded Polystyrene Insulation", expiring on 04/11/12.
4. Notice of Acceptance No. **06-0823.09** issued to Owens Corning for "Fold form Insulation", expiring on 05/31/12.
5. Notice of Acceptance No. **08-0206.01** issued to Solutia, Inc. for "Vanciva composite laminated glass", expiring on 12/11/2013.

F. STATEMENTS

1. Statesman letter of conformance to FBC 2007 and "No financial interest", dated 06/15/09, signed and sealed by David M. Schonacher, P. E.
2. Statement letter of compliance, as a part of the above referenced test report, issued by Architectural Testing Inc.

G. OTHER

1. None

Ishaq I. Chanda

Ishaq I. Chanda, P.E.
Product Control Examiner
NOA No 09-0604.09
Expiration Date: December 30, 2014
Approval Date: December 30, 2009

QUALITY ENGINEERED PRODUCTS

SINGLE GLAZED DOOR (INSWING)

INSTALLATION NOTES:

1. ONE (1) INSTALLATION ANCHOR IS REQUIRED AT EACH ANCHOR LOCATION SHOWN.

2. THE NUMBER OF INSTALLATION ANCHORS DEPICTED IS THE MINIMUM NUMBER OF ANCHORS TO BE USED FOR PRODUCT INSTALLATION.

4. SHIM AS REQUIRED AT EACH INSTALLATION ANCHOR WITH LOAD BEARING SHIM(S). MAXIMUM ALLOWABLE SHIM STACK TO BE 1/4 INCH. SHIM WHERE SPACE OF 1/16 INCH OR GREATER OCCURS. SHIM(S) SHALL BE CONSTRUCTED OF HIGH DENSITY PLASTIC OR BETTER.

6. FOR INSTALLATION THROUGH PROPERLY SECURED 1X BUCK TO CONCRETE/MASONRY, OR DIRECTLY INTO CONCRETE/MASONRY, USE 3/16 INCH DIAMETER ITW TAPCON OF SUFFICIENT LENGTH TO ACHIEVE 1 1/4 INCH MINIMUM EMBEDMENT.

8. MINIMUM EMBEDMENT AND EDGE DISTANCE EXCLUDE WALL FINISHES, INCLUDING BUT NOT LIMITED TO STUCCO, FOAM, BRICK VENEER, AND SIDING.

9. INSTALLATION ANCHORS AND ASSOCIATED HARDWARE MUST BE MADE OF CORROSION RESISTANT MATERIAL OR HAVE A CORROSION RESISTANT COATING.

10. FOR GROUT FILLED BLOCK, DO NOT INSTALL INSTALLATION ANCHORS INTO MORTAR JOINTS. EDGE DISTANCE IS MEASURED FROM FREE EDGE OF BLOCK OR EDGE OF MORTAR JOINT INTO FACE SHELL OF BLOCK.

11. INSTALLATION ANCHORS SHALL BE INSTALLED IN ACCORDANCE WITH ANCHOR MANUFACTURER'S INSTALLATION INSTRUCTIONS, AND ANCHORS SHALL NOT BE USED IN SUBSTRATES WITH STRENGTHS LESS THAN THE MINIMUM STRENGTH SPECIFIED BY THE ANCHOR MANUFACTURER.

12. INSTALLATION ANCHOR CAPACITIES FOR PRODUCTS HEREIN ARE BASED ON SUBSTRATE MATERIALS WITH THE FOLLOWING PROPERTIES:
    A. WOOD - MINIMUM SPECIFIC GRAVITY OF 0.55 (FOR SILL INSTALLATION ONLY).
    B. CONCRETE -MINIMUM COMPRESSIVE STRENGTH OF 3000 PSI.
    C. MASONRY - STRENGTH CONFORMANCE TO ASTM C-90, GRADE N, TYPE 1 (OR GREATER).

GENERAL NOTES:

1. THE PRODUCT SHOWN HEREIN IS DESIGNED AND MANUFACTURED TO COMPLY WITH THE 2007 FLORIDA BUILDING CODE (FBC), INCLUDING HVHZ AND HAS BEEN EVALUATED ACCORDING TO THE FOLLOWING:
   - TAS 201-94/TAS 202-94/TAS 203-94

2. ADEQUACY OF THE EXISTING STRUCTURAL CONCRETE/MASONRY AS A MAIN WIND FORCE RESISTING SYSTEM CAPABLE OF WITHSTANDING AND TRANSFERRING APPLIED PRODUCT LOADS TO THE FOUNDATION IS THE RESPONSIBILITY OF THE ENGINEER OR ARCHITECT OF RECORD FOR THE PROJECT OF INSTALLATION.

4. THE INSTALLATION DETAILS DESCRIBED HEREIN ARE GENERIC AND MAY NOT REFLECT ACTUAL CONDITIONS FOR A SPECIFIC SITE. IF SITE CONDITIONS CAUSE INSTALLATION TO DEVIATE FROM THE REQUIREMENTS DETAILED HEREIN, A LICENSED ENGINEER OR ARCHITECT SHALL PREPARE SITE SPECIFIC DOCUMENTS FOR USE WITH THIS DOCUMENT FOR NON-HVHZ. ONE TIME APPROVAL REQUIRES FOR HVHZ FROM MIAMI-DADE COUNTY.

5. THIS PRODUCT IS LARGE AND SMALL MISSILE IMPACT RESISTANT APPROVED IMPACT PROTECTIVE SYSTEM **IS NOT REQUIRED** ON THIS PRODUCT IN AREAS REQUIRING IMPACT RESISTANCE.

6. DOOR FRAME MATERIAL: STEEL

7. GLASS MEETS THE REQUIREMENTS OF ASTM E 1300 GLASS CHARTS. SEE SHEET 2 FOR GLAZING DETAIL.

8. DESIGNATIONS "X" FOLLOWING:
   X: OPERABLE PANEL

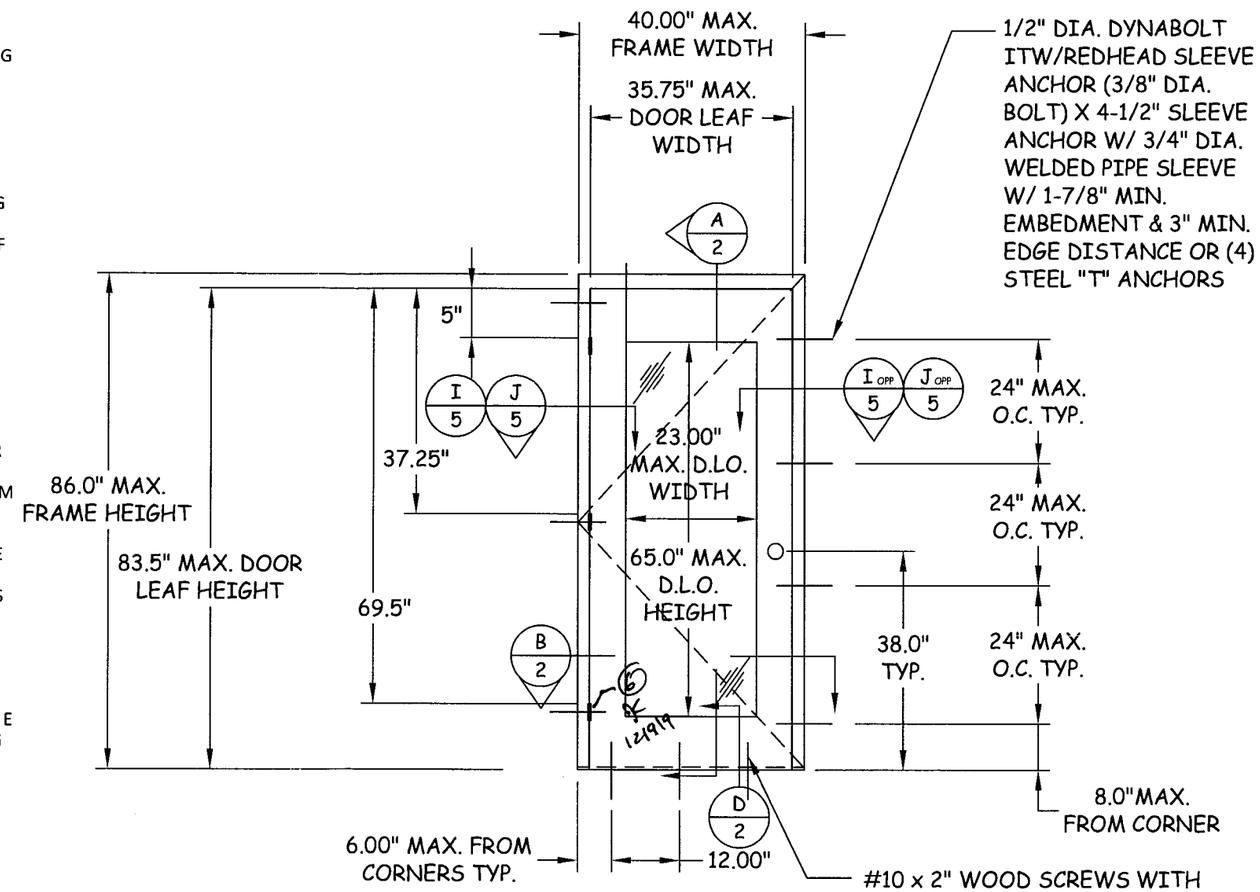

INSWING DOOR (INTERIOR VIEW)

TABLE OF CONTENTS		
SHEET	REVISION	SHEET DESCRIPTION
1	-	INSTALLATION & GENERAL NOTES
2	-	CYLINDRICAL LOCK SECTIONS
3	-	DOOR DETAILS
4	-	ANCHOR DETAILS
5	-	STEEL REINFORCEMENTS
6	-	COMPONENTS & BILL OF MATERIALS

MIAMI DADE/FLORIDA BUILDING CODE DESIGN PRESSURES			
CYLINDRICAL LOCK REINFORCED	WHERE ~~AIR~~ & WATER INFILTRATION REQUIREMENTS IS NEEDED	WHERE ~~AIR~~ & WATER INFILTRATION REQUIREMENTS IS NOT NEEDED	MISSILE IMPACT RATING
POSITIVE	NOT APPROVED	+80 PSF*	LARGE & SMALL MISSILE IMPACT RATED
NEGATIVE	NOT APPROVED	-80 PSF*	LARGE & SMALL MISSILE IMPACT RATED

* UNIT SHALL BE INSTALLED AT LOCATION PROTECTED BY OVERHANG SUCH THAT OVERHANG RATIO (OH) = OH LENGTH/OH HEIGHT IS GREATER THAN 1

Approved as complying with the Florida Building Code
Date DEC 30, 2009
NOA# 09-0604.09
Miami Dade Product Control Division
By Ishwar I. Chanda

Quality Engineered Products Co., Inc.
4506 QUALITY LN.
TAMPA, FL. 33634
PH: (813) 885-1693 FX: (813) 884-2673

TITLE: GLAZED DOOR INSTALLATION & GENERAL NOTES

PREPARED BY: QUALITY ENGINEERED PRODUCTS 4506 QUALITY LN. TAMPA, FL 33634 PH: 813.885.1693 FX: 813.884.2673

REVISIONS

NO.	DESCRIPTION	BY	DATE

DAVID M. SCHONACHER, P.E. FLORIDA REG. # 63131

DATE: 04.28.09 | DWN BY: KRM | CHK BY: DMS | SCALE: NTS

DWG #: QEP005

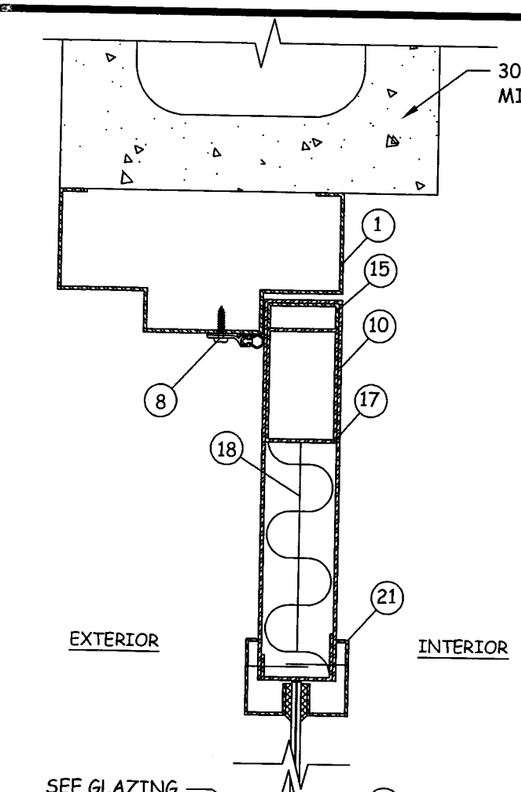

A/2 VERTICAL SECTION

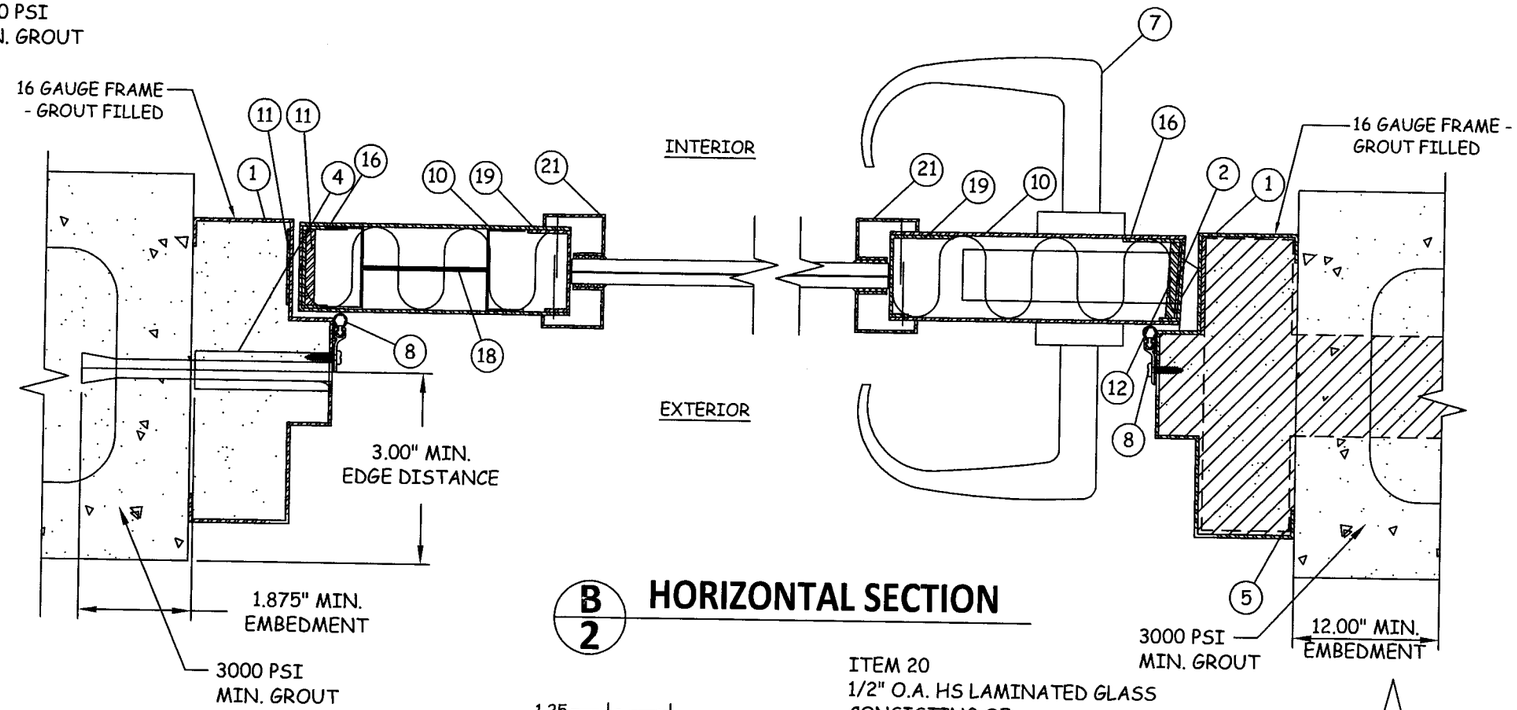

B/2 HORIZONTAL SECTION

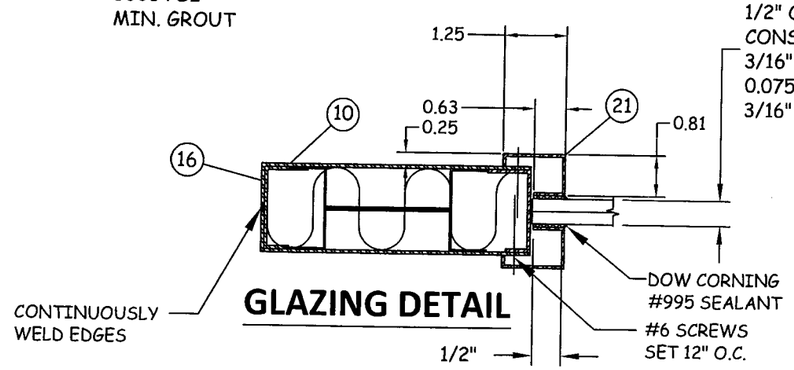

ITEM 20
1/2" O.A. HS LAMINATED GLASS
CONSISTING OF:
3/16" HEAT STRENGTHENED GLASS
0.075" INTERLAYER BY VANCEZA
3/16" HEAT STRENGTHENED GLASS

C/2 GLAZING DETAIL

C/2 DETAIL LOCK CHANNEL

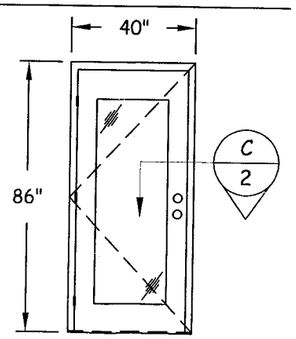

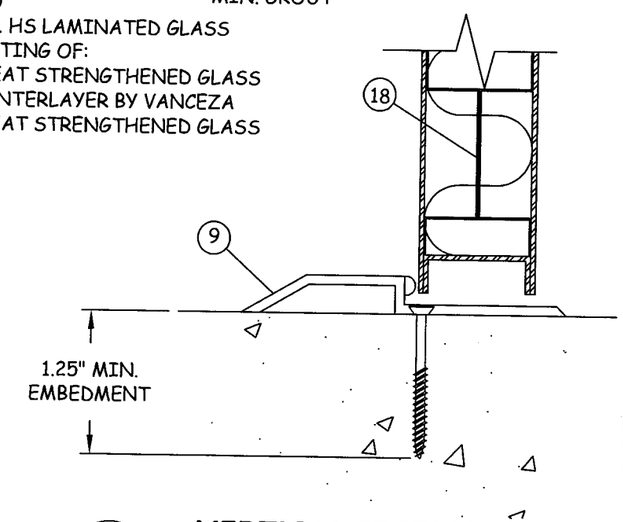

D/2 VERTICAL SECTION
SILL MASONARY/CONCRETE

Approved as complying with the Florida Building Code
Date DEC 30, 2009
NOA# 09-0604.09
Miami Dade Product Control Division
By

Quality Engineered Products Co., Inc.
4506 QUALITY LN.
TAMPA, FL. 33634
PH: (813) 885-1693 FX: (813) 884-2673

TITLE: GLAZED DOOR
MORTISE LOCK SECTION

PREPARED BY:
QUALITY ENGINEERED PRODUCTS
4506 QUALITY LN.
TAMPA, FL 33634
PH: 813.885.1693 FX: 813.884.2673

REVISIONS

NO.	DESCRIPTION	BY	DATE

DAVID M. SCHONACHER, P.E.
FLORIDA REG. # 63131

DATE: 04.28.09
DWN BY: KRM
CHK BY: DMS
SCALE: NTS
DWG #: QEP005
SHEET: 2 OF 6

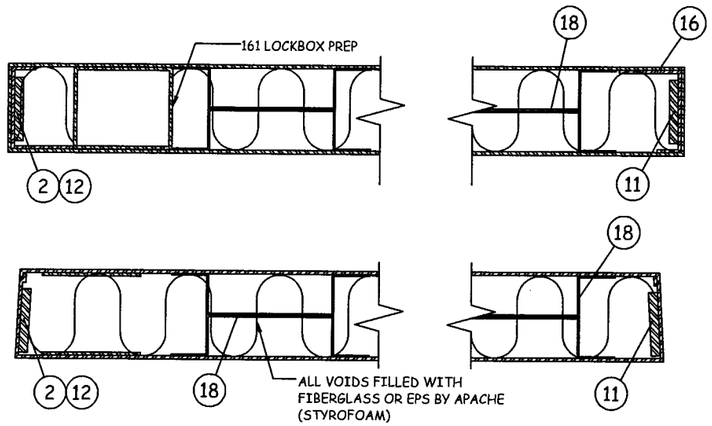

E/3 SEAMLESS EDGE DOOR

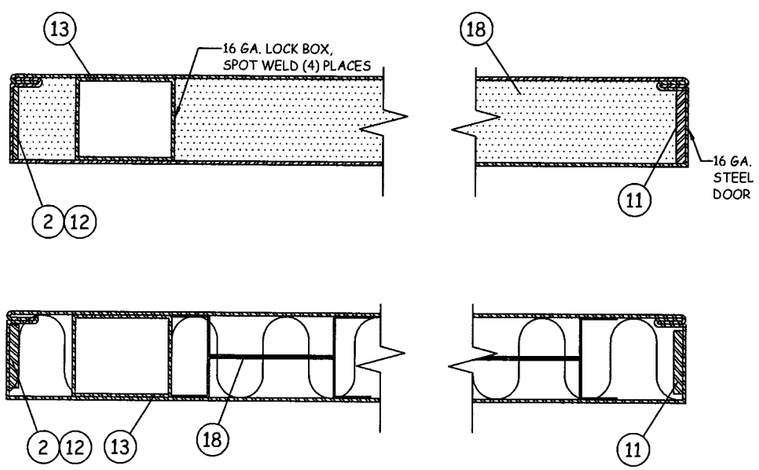

F/3 EDGE SEAM DOOR

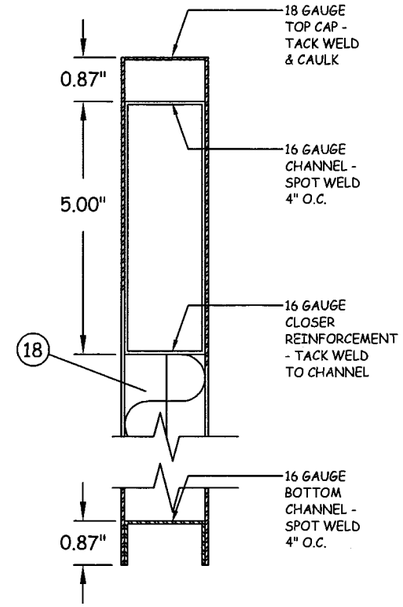

H/3 VERTICAL DOOR SECTION

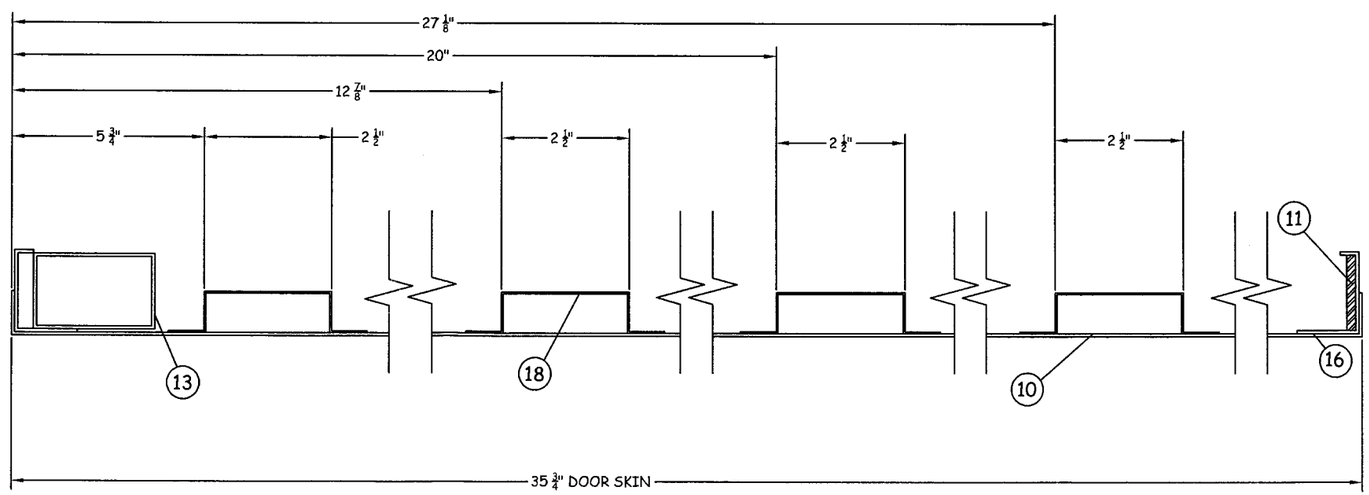

G/3 INTERNAL SECTION (PANEL ILLUSTRATION)

REINFORCEMENT SPACING

Approved as complying with the Florida Building Code
Date DEC 30 2009
NOA# 09-0604.09
Miami Dade Product Control Division
By Shaq I. Chanda

Quality Engineered Products Co., Inc.
4506 QUALITY LN.
TAMPA, FL. 33634
PH: (813) 885-1693 FX: (813) 884-2673

TITLE: GLAZED DOOR
DOOR DETAILS

PREPARED BY:
QUALITY ENGINEERED PRODUCTS
4506 QUALITY LN.
TAMPA, FL 33634
PH: 813.885.1693 FX: 813.884.2673

REVISIONS

NO.	DESCRIPTION	BY	DATE

DAVID M. SCHONACHER, P.E.
FLORIDA REG. # 63131

DATE: 04.28.09
DWN BY: KRM
CHK BY: DMS
SCALE: NTS

DWG #: QEP005

SHEET: 3 OF 6

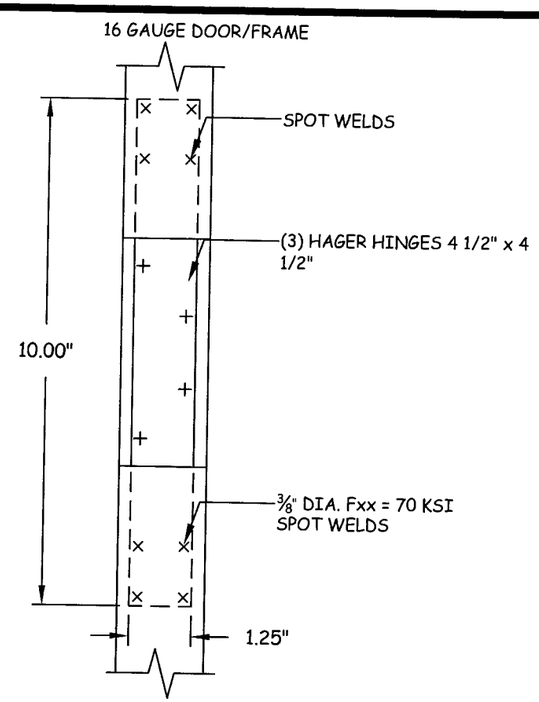

(11) DOOR & FRAME STEEL HINGE PLATE 7 GAUGE x 1 1/4" x 10"

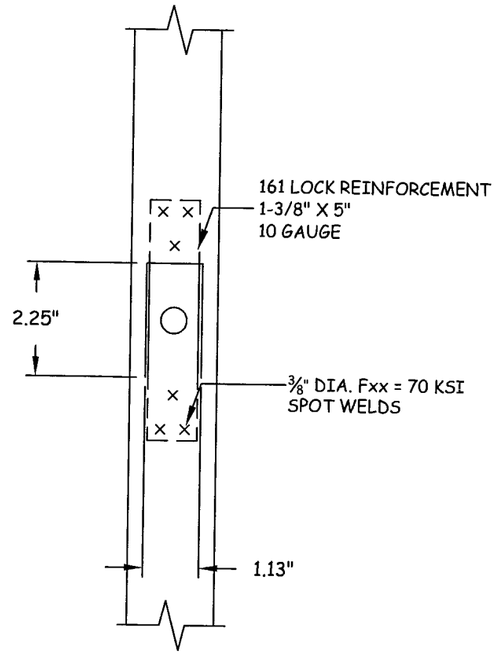

DOOR LOCK REINFORCEMENT

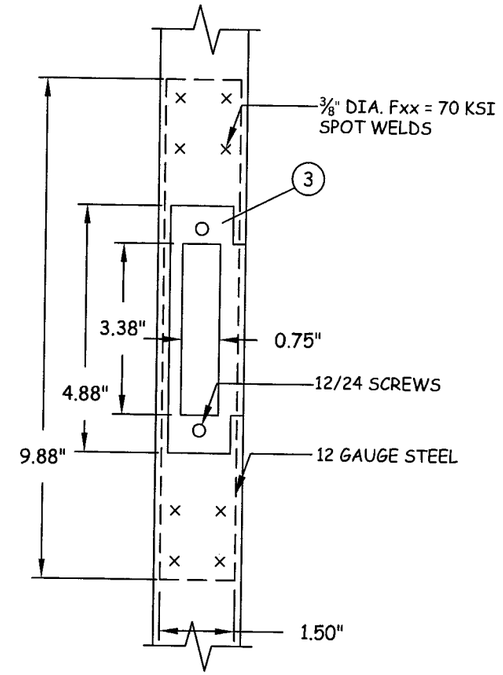

12 GA. STEEL REINFORCED DOOR FRAME

DOOR HINGE REINFORCEMENT

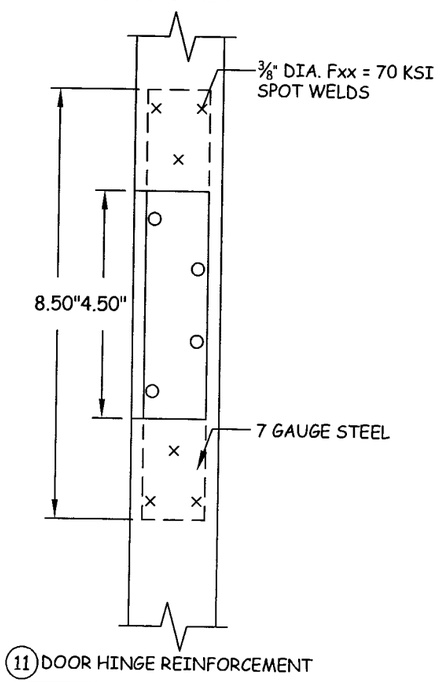

(11) DOOR HINGE REINFORCEMENT

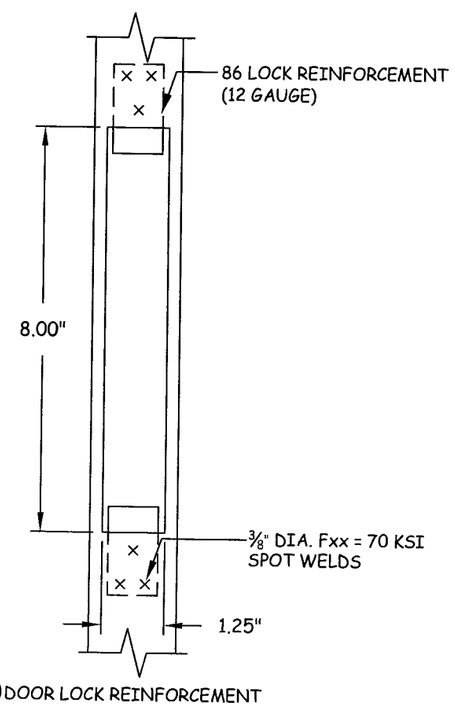

(2) DOOR LOCK REINFORCEMENT

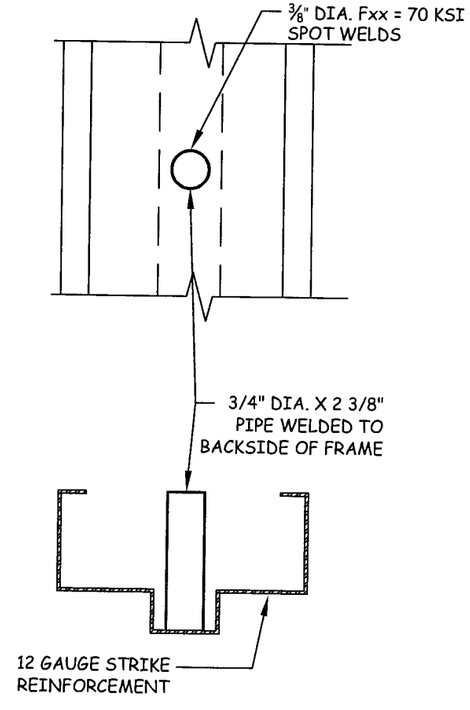

PIPE SLEEVE DETAIL

Approved as complying with the Florida Buiding Code
Date DEC 30, 2009
NOA# 09-0604.09
Miami Dade Product Control Division
By Ishaq I. Chanda

Quality Engineered Products Co., Inc.
4506 QUALITY LN.
TAMPA, FL. 33634
PH: (813) 885-1693 FX: (813) 884-2673

TITLE: GLAZED DOOR STEEL REINFORCEMENTS

PREPARED BY:
QUALITY ENGINEERED PRODUCTS
4506 QUALITY LN.
TAMPA, FL 33634
PH: 813.885.1693 FX: 813.884.2673

REVISIONS

NO.	DESCRIPTION	BY	DATE

DAVID M. SCHONAGER, P.E.
FLORIDA REG. # 63131

DATE: 04.28.09
DWN BY: KRM
CHK BY: DMS
SCALE: NTS
DWG #: QEP005
SHEET: 4 OF 6

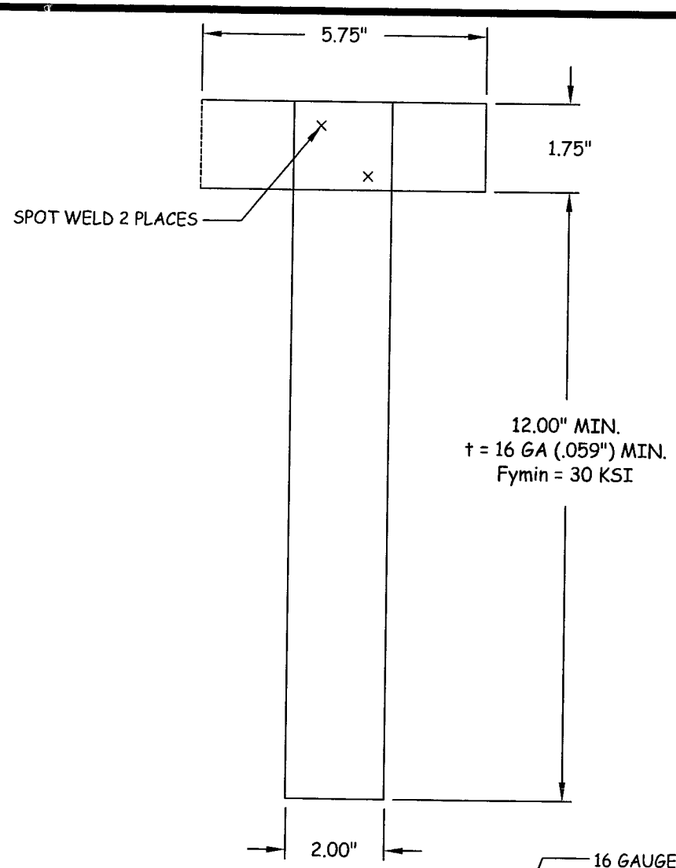

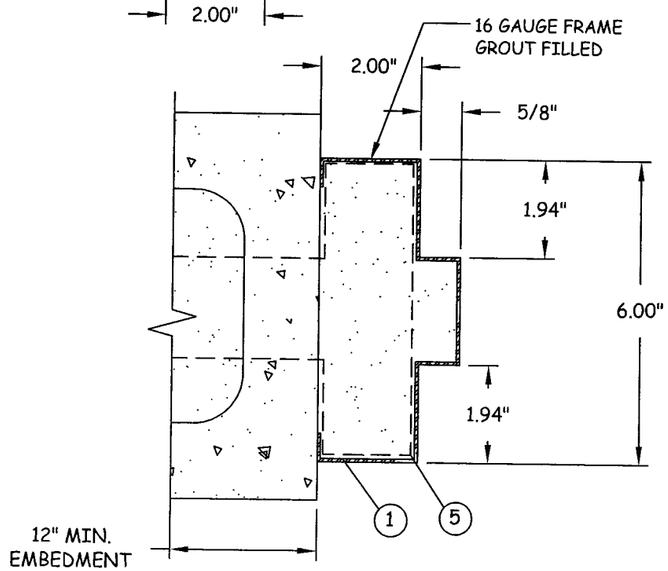

I / 5 **FRAME JAMB**

T-ANCHOR

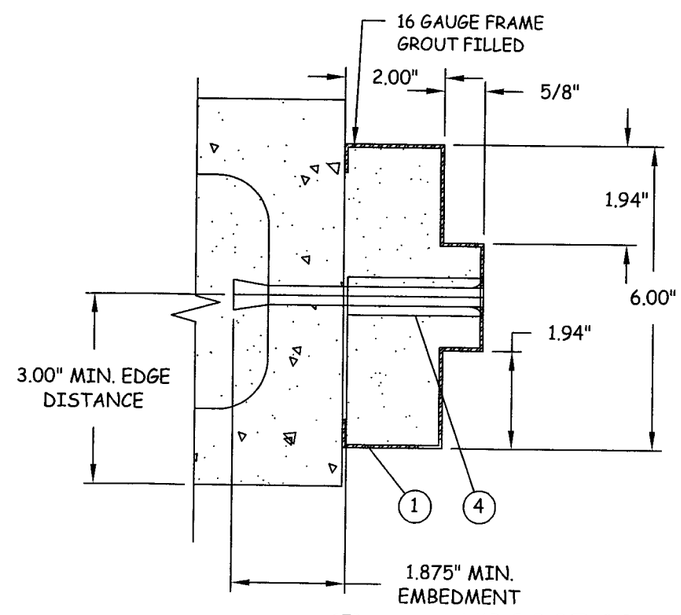

J / 5 **FRAME JAMB**

ANCHOR BOLT

Approved as complying with the Florida Building Code
Date DEC 30, 2009
NOA# 09-0604.09
Miami Dade Product Control Division
By [signature]

Quality Engineered Products Co., Inc.

4506 QUALITY LN.
TAMPA, FL. 33634
PH: (813) 885-1693 FX: (813) 884-2673

TITLE: GLAZED DOOR ANCHOR DETAILS

PREPARED BY:
QUALITY ENGINEERED PRODUCTS
4506 QUALITY LN.
TAMPA, FL 33634
PH: 813.885.1693 FX: 813.884.2673

REVISIONS

NO.	DESCRIPTION	BY	DATE

DAVID M. SCHONACHER, P.E.
FLORIDA REG. # 63131

DATE: 04.28.09
DWN BY: KRM
CHK BY: DMS
SCALE: NTS

DWG #: QEP005

SHEET: 5 OF 6

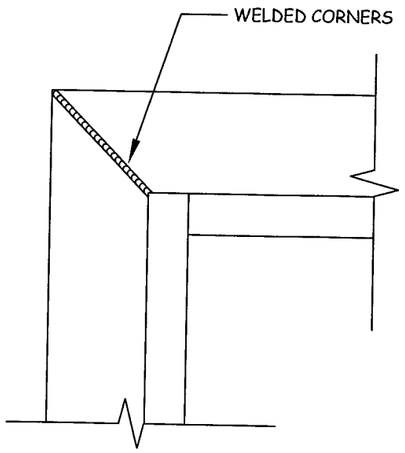

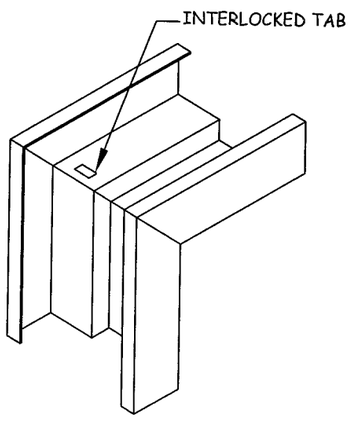

BILL OF MATERIALS

MARK	DESCRIPTION
1	16 GAUGE STEEL FRAME W/ GROUTED JAMBS
2	1⅛" X 2½" X 12 GA. STEEL LOCK OR STRIKE REINFORCEMENT (MORTISE)
3	1½" x 8" x 12 GA. FRAME STRIKE REINFORCEMENTS
4	½" DIA. DYNABOLT ITW/REDHEAD SLEEVE ANCHOR (⅜" DIA. BOLT) X 4½" SLEEVE ANCHOR W/ ¾" DIA. WELDED PIPE SLEEVE W/ 1⅞" MIN. EMBEDMENT & 3" MIN. EDGE DISTANCE
5	T-ANCHORS PER DETAIL SHEET 5
6	HAGER HINGES BB1279 4.5 X 4.5 X .134 THICK
7	MARKS 195 SERIES, SCHLAGE D SERIES OR BEST 93K
8	PEMKO 303AS WEATHER STRIP
9	PEMKO 2001av THRESHOLD
10	16 GAUGE STEEL DOOR
11	1¼" X 10" X 7 GA.STEEL HINGE REINFORCEMENT
12	1⅜" x 5" x 10 GA. LATCH REINFORCEMENT (CYLINDRICAL)
13	16 GAUGE LOCK BODY REINFORCEMENT (16 GAUGE PLATE AT MORTISE LOCKS)
14	U-SHAPE END STEEL CHANNEL
15	U-SHAPE CLOSE TOP STEEL CHANNEL
16	1¼" x 1⅝" x ½" FULL LENGTH STEEL CHANNEL
17	1½" x 5¼" 12 GA. STEEL BOX CHANNEL WELDED 6" O.C. FULL LENGTH
18	20 GAUGE HAT STIFFENERS 74" LONG W/ FIBERGLASS INSULATION OR POLYSTYRENE FOAM BY DYPLAST (FROM APACHE PRODUCTS) PER CURRENT NOA.
19	1¼" x 1⅝" x ½" 16 GA. STEEL GLAZING CHANNEL REINFORCEMENT
20	1/2" LAMINATED GLASS 3/16" HEAT STRENGTHENED GLASS 0.075" INTERLAYER BY VANCEZA, LAMINATED BY OLDCASTLE GLASS 3/16" HET STRENGTHENED GLASS)
21	18 GA. STEEL EXTRUDED DOOR GLAZING TRIM W/ #6 SCREWS @ 12" O/C

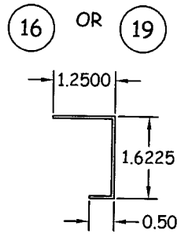

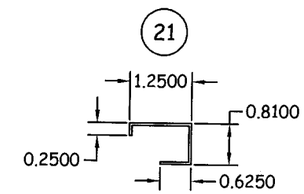

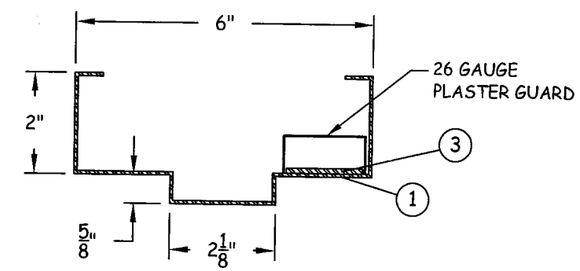

PLASTER GUARD
W/ 16 GA. JAMB

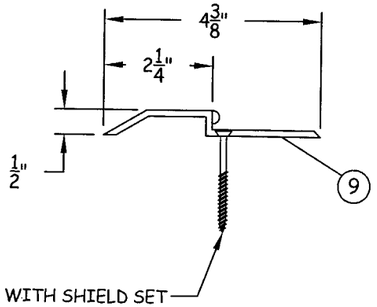

#10 x 2" WOOD SCREWS WITH SHIELD SET AT 12" O.C. (EMBED INTO WOOD W/ 1.375" MIN. PENETRATION) OR 3/16" x 2" TAPCON SET AT 12" O.C. (EMBED INTO CONCRETE W/ 1-1/4" MIN. PENETRATION)

Approved as complying with the Florida Building Code
Date DEC 30, 2009
NOA# 05-0604.05
Miami Dade Product Control Division
By Ishay I. Chandler

Quality Engineered Products Co., Inc.
4506 QUALITY LN.
TAMPA, FL. 33634
PH: (813) 885-1693 FX: (813) 884-2673

TITLE: GLAZED DOOR COMPONENTS & BILL OF MATERIALS

PREPARED BY:
QUALITY ENGINEERED PRODUCTS
4506 QUALITY LN.
TAMPA, FL 33634
PH: 813.885.1693 FX: 813.884.2673

REVISIONS

NO.	DESCRIPTION	BY	DATE

DAVID M. SCHONACHER, P.E.
FLORIDA REG. # 63131

DATE: 04.28.09
DWN BY: KRM
CHK BY: DMS
SCALE: NTS

DWG #: QEP005

SHEET: 6 OF 6