MIAMI-DADE COUNTY
DEPARTMENT OF REGULATORY AND ECONOMIC RESOURCES (RER)
BOARD AND CODE ADMINISTRATION DIVISION

MIAMI-DADE COUNTY
PRODUCT CONTROL SECTION
11805 SW 26 Street, Room 208
Miami, Florida 33175-2474
T (786) 315-2590 F (786) 315-2599
www.miamidade.gov/economy

NOTICE OF ACCEPTANCE (NOA)

R. C. Aluminum Industries, Inc.
2805 NW 75th Ave
Miami, FL 33122

SCOPE:

This NOA is being issued under the applicable rules and regulations governing the use of construction materials. The documentation submitted has been reviewed and accepted by Miami-Dade County RER - Product Control Section to be used in Miami Dade County and other areas where allowed by the Authority Having Jurisdiction (AHJ).

This NOA shall not be valid after the expiration date stated below. The Miami-Dade County Product Control Section (In Miami Dade County) and/or the AHJ (in areas other than Miami Dade County) reserve the right to have this product or material tested for quality assurance purposes. If this product or material fails to perform in the accepted manner, the manufacturer will incur the expense of such testing and the AHJ may immediately revoke, modify, or suspend the use of such product or material within their jurisdiction. RER reserves the right to revoke this acceptance, if it is determined by Miami-Dade County Product Control Section that this product or material fails to meet the requirements of the applicable building code.

This product is approved as described herein, and has been designed to comply with the Florida Building Code, including the High Velocity Hurricane Zone.

DESCRIPTION: Series "PH 3200" Aluminum Sliding Glass Door - N. I.

APPROVAL DOCUMENT: Drawing No. **W07-102**, titled "Series PH3200 Alum Sliding Glass Door (N.I.)", sheets 1 through 9 of 9, prepared by AL-Farooq Corporation, dated 11/08/07 and last revised on OCT 31, 2012, signed and sealed by Javad Ahmad, P.E., bearing the Miami-Dade County Product Control Revision stamp with the Notice of Acceptance number and expiration date by the Miami-Dade County Product Control Section.

MISSILE IMPACT RATING: None. Approved shutters complying w/ FBC are required

Limitations:

1. See Design Pressure (DP) chart in sheet 2 and anchor capacity charts at head and sill in sheet 3. Lower Design Pressure shall control from the charts. Max Exterior DP is limited to =+120 PSF

LABELING: Each unit shall bear a permanent label with the manufacturer's name or logo, city, state and series and following statement: "Miami-Dade County Product Control Approved", noted herein.

RENEWAL of this NOA shall be considered after a renewal application has been filed and there has been no change in the applicable building code negatively affecting the performance of this product.

TERMINATION of this NOA will occur after the expiration date or if there has been a revision or change in the materials, use, and/or manufacture of the product or process. Misuse of this NOA as an endorsement of any product, for sales, advertising or any other purposes shall automatically terminate this NOA. Failure to comply with any section of this NOA shall be cause for termination and removal of NOA.

ADVERTISEMENT: The NOA number preceded by the words Miami-Dade County, Florida, and followed by the expiration date may be displayed in advertising literature. If any portion of the NOA is displayed, then it shall be done in its entirety.

INSPECTION: A copy of this entire NOA shall be provided to the user by the manufacturer or its distributors and shall be available for inspection at the job site at the request of the Building Official.

This NOA **revises & renews NOA # 08-0130.08** and consists of this page 1 and evidence pages E-1, as well as approval document mentioned above.

The submitted documentation was reviewed by **Ishaq I. Chanda, P.E.**

MIAMI-DADE COUNTY APPROVED

4
11/1/12

NOTICE OF ACCEPTANCE: EVIDENCE SUBMITTED

A. DRAWINGS

1. Manufacturer's die drawings and sections (Submitted under file # **08-0130.08**)
2. Drawing No. **W07-102**, titled "Series PH3200 Alum Sliding Glass Door (N.I.)", sheets 1 through 9 of 9, prepared by AL-Farooq Corporation, dated 11/08/07 and last revised on OCT 31, 2012, signed and sealed by Javad Ahmad, P.E.

B. TESTS (Submitted under file # **08-0130.08**)

1. Test reports on: 1) Air Infiltration Test, per FBC, TAS 202-94
   2) Uniform Static Air Pressure Test, Loading per FBC TAS 202-94

   Along with marked-up drawings and installation diagram, prepared by Fenestration Testing Laboratory, Inc., Test Report No. **FTL-5287**, dated 07/26/2007, signed and sealed by Carlos S. Rionda, P.E.
2. Test reports on: 1) Air Infiltration Test, per FBC, TAS 202-94
   2) Uniform Static Air Pressure Test, Loading per FBC TAS 202-94
   3) Water Resistance Test, per FBC, TAS 202-94
   4) Large Missile Impact Test per FBC, TAS 201-94
   5) Cyclic Wind Pressure Loading per FBC, TAS 203-94
   6) Forced Entry Test, per FBC 2411 3.2.1, TAS 202-94

   along with marked-up drawings and installation diagram of an aluminum sliding glass door, prepared by Fenestration Testing Laboratory, Inc., Test Report No. **FTL-5288** dated 08/30/07, signed and sealed by Carlos S. Rionda, P.E.
3. Additional test reports **FTL-5786** dated 12/03/08, issued by Fenestration Testing Laboratory, Inc., per TAS 202-94 and TAs 201/203-94 (LMI), signed and sealed by Michael R. Wenzel, P. E.

C. CALCULATIONS

1. Anchor verification calculations and structural analysis, complying with FBC-2010, prepared by Al Farooq Corporation, dated 03/13/09 and last revised on AUG 08, 2012, signed and sealed by Javad Ahmad, P.E.
2. Glazing complies w/ ASTME-1300-02 & -04

D. QUALITY ASSURANCE

1. Miami Dade Department of Regulatory and Economic Resources (RER).

E. MATERIAL CERTIFICATIONS

1. Technical cut sheet of strength properties of Teknor Apex-8431 thermoplastic elastomer, extruded by Melt Plastic Inc.

F. STATEMENTS

1. Statement letter of conformance and letter of no financial interest, prepared by Al Farooq Corporation, dated 07/26/12, signed and sealed by Javad Ahmad, P.E.
2. Lab compliance as part of the above referenced test report.

G. OTHER

1. This NOA **revises** & **renews** NOA # **08-0130.08**, expiring on March 27, 2013.
2. Test proposal, dated 12/08/06 approved by BCCO.

Ishaq I. Chanda

Ishaq I. Chanda, P.E.
Product Control Examiner
NOA No. 09-0604.17
Expiration Date: March 27, 2018
Approval Date: November 08, 2012

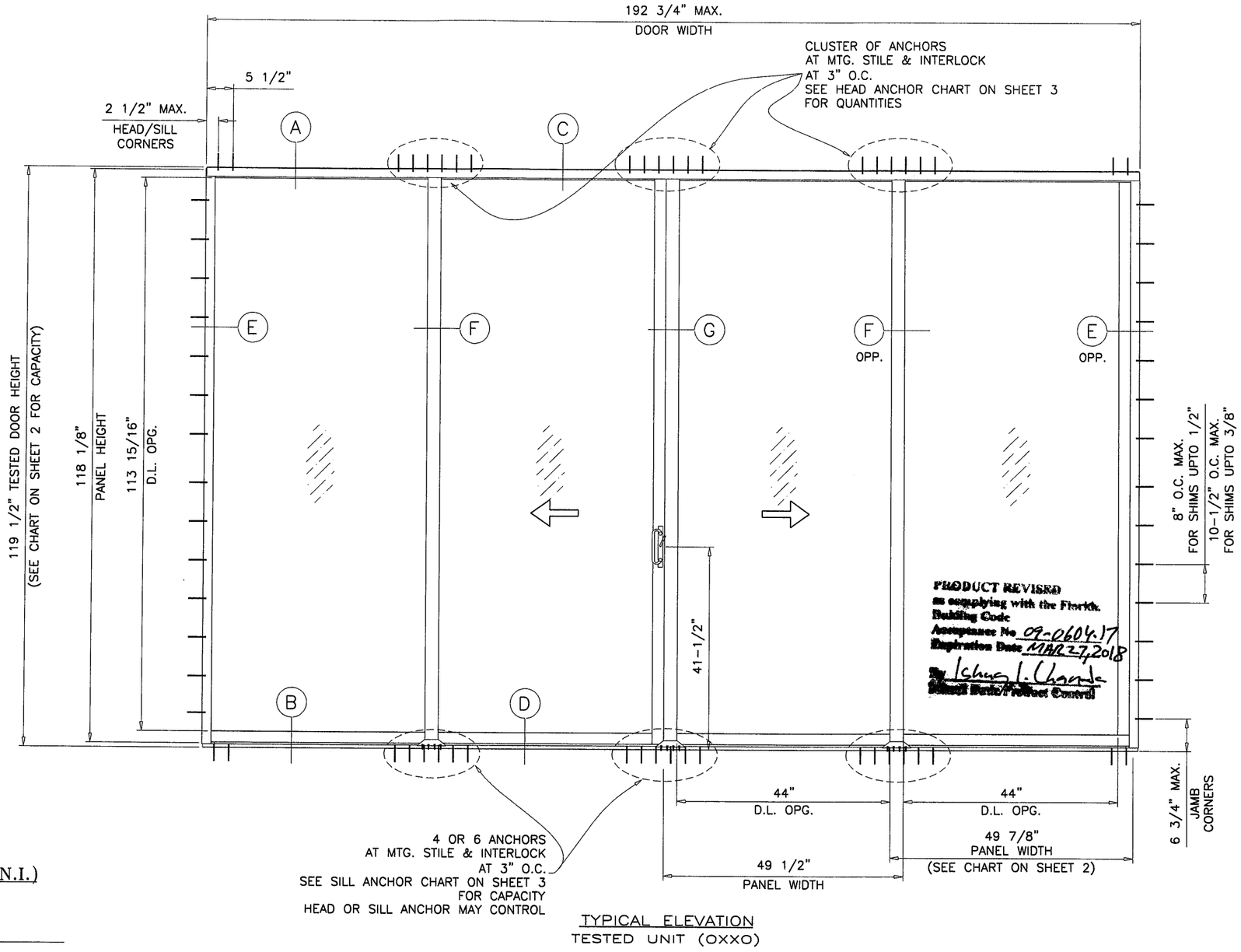

TYPICAL ELEVATION
TESTED UNIT (OXXO)

DAYLITE OPENINGS:
D.L.O. HEIGHT = PANEL HEIGHT – 4.188"
D.L.O. WIDTH (FIX. PANEL) = PANEL WIDTH – 5.875"
D.L.O. WIDTH (OPER. PANEL) = PANEL WIDTH – 5.500"

SERIES PH3200 ALUM SLIDING GLASS DOOR (N.I.)

DESIGN LOAD RATING FOR DOORS TO BE AS PER CHART SHOWN ON SHEET 2.

THIS PRODUCT HAS BEEN DESIGNED AND TESTED TO COMPLY WITH THE REQUIREMENTS OF THE FLORIDA BUILDING CODE INCLUDING HIGH VELOCITY HURRICANE ZONE (HVHZ).

WOOD BUCKS BY OTHERS, MUST BE ANCHORED PROPERLY TO TRANSFER LOADS TO THE STRUCTURE.

ANCHORS SHALL BE AS LISTED, SPACED AS SHOWN ON DETAILS, ANCHORS EMBEDMENT TO BASE MATERIAL SHALL BE BEYOND WALL DRESSING OR STUCCO.

ANCHORING OR LOADING CONDITIONS NOT SHOWN IN THESE DETAILS ARE NOT PART OF THIS APPROVAL.

A LOAD DURATION INCREASE IS USED IN DESIGN OF ANCHORS INTO WOOD ONLY.

MATERIALS INCLUDING BUT NOT LIMITED TO STEEL/METAL SCREWS, THAT COME INTO CONTACT WITH OTHER DISSIMILAR MATERIALS SHALL MEET THE REQUIREMENTS OF THE FLORIDA BLDG. CODE SECTION 2003.8.4.

DOORS NOT RATED FOR IMPACT.

INSTALLATION OF THIS PRODUCT IN THE HVHZ AREA REQUIRES THE USE OF APPROVED SHUTTERS OR EXTERNAL PROTECTION DEVICES COMPLYING WITH HVHZ REQUIREMENTS.

INSTALLATION OF THIS SYSTEM OUTSIDE THE HVHZ AREA SHALL MEET THE APPLICABLE REQUIREMENTS FOR WIND BORNE DEBRIS PROTECTION.

MONOLITHIC INSULATING GLASS
NON IMPACT

Engr: JAVAD AHMAD
CIVIL
FLA. PE # 70592
C.A.N. 3538

OCT 31 2012

AL-FAROOQ CORPORATION
ENGINEERS & PRODUCT DEVELOPMENT
1235 S.W. 87 AVE
MIAMI, FLORIDA 33174
TEL. (305) 264-8100 FAX. (305) 262-6978
COMP-ANL\W07-102RC

SERIES PH3200 ALUM SLIDING GLASS DOOR (N.I.)

R.C. ALUMINUM INDUSTRIES INC.
2805 N.W. 75 TH AVE.
MIAMI, FL. 33122
TEL. (305) 592-2184 FAX. (305) 592-1515

revisions:

no	date	by	description
A	03.05.09		UPDATED FOR 2007 FBC
B	09.17.10		REV. PER BCCO COMMENTS
C	12.07.10		REV. PER BCCO COMMENTS

date: 11-08-07
scale: 1/2"=1'-0"
dr. by: HAMID
chk. by:

drawing no.
W07-102

sheet 1 of 9

DESIGN LOAD CAPACITY – PSF

PANEL WIDTH NOMINAL INCHES	DOOR HEIGHT INCHES	1" OVERALL INSUL. GLASS	
		EXT. (+)	INT. (–)
36	80	120.0	210.0
42		120.0	210.0
48		120.0	204.2
54		120.0	191.8
60		120.0	182.9
36	84	120.0	210.0
42		120.0	207.4
48		120.0	190.6
54		120.0	178.3
60		120.0	169.4
36	90	120.0	210.0
42		120.0	189.4
48		120.0	173.2
54		120.0	161.3
60		120.0	152.4
36	96	120.0	195.4
42		120.0	174.2
48		120.0	158.8
54		120.0	147.3
36	102	120.0	181.5
42		120.0	161.3
48		120.0	146.6
54		120.0	135.5
36	108	120.0	169.4
42		120.0	150.2
48		120.0	136.1
36	114	120.0	158.8
42		120.0	140.5
48		120.0	127.0
36	119	120.0	150.9
42		120.0	133.3
48		120.0	120.3
36	120	120.0	149.5
42		120.0	132.0
36	126	120.0	130.8
42		113.5	113.5
36	132	113.4	113.4
42		98.3	98.3
36	144	87.0	87.0

MAX. OVERALL DOOR WIDTHS TO BE LIMITED TO TESTED 192–3/4 IN.
WHICH TO BE USED WITH SINGLE NOM. PANEL WIDTH PER CHART ABOVE.
EXTERIOR(+) DESIGN PRESSURE NOT TO EXCEED 120 PSF.

ITEM NO.	PART NUMBER	QUANTITY	DESCRIPTION	MATERIAL	MANF./SUPPLIER/REMARKS
E1	PH3400–001	1/ PANEL	INTERLOCK STILE INSIDE	6005–T5	–
E2	PH3400–002	1	LOCK STILE	6063–T6	–
E3	PH3400–003	1	MEETING STILE	6005–T5	–
E4	PH3400–004	1/ FIX. PANEL	JAMB STILE	6063–T6	–
E5	PH3400–005	2	FRAME JAMB	6063–T6	–
E6	PH3400–006	1	FRAME HEAD	6005–T5	–
E7	PH3400–007	1	SILL TRACK	6005–T5	–
E8	PH3400–008	1	SILL THRESHOLD (LENGTH = OPNG. WIDTH BETWEEN FIXED PANELS)	6063–T6	–
E9	PH3400–009	1	HEAD CLOSURE ADAPTOR (LENGTH = OPNG. WIDTH BETWEEN FIXED PANELS)	6063–T6	–
E10	PH3400–010	1/ MOV. PANEL	MOVING OUTSIDE TOP RAIL	6063–T6	–
E11	PH3400–024	1/ MOV. PANEL	MOVING OUTSIDE BOTTOM RAIL	6005–T5	–
E12	PH3400–012	1/ FIX. PANEL	FIXED INSIDE TOP RAIL	6063–T6	–
E13	PH3400–013	1/ FIX. PANEL	FIXED INSIDE BOTTOM RAIL	6063–T6	–
E14	2400ST–031	AS REQD.	SILL TRACK PLATE, 5" LONG AT ENDS, 10" LONG AT STILE LOCATIONS	6061–T6	–
E15	2400ST–040	AS REQD.	SCREEN TRACK INSIDE	–	–
E16	2400ST–056	AS REQD.	SCREEN VERTICAL JAMB	–	–
E17	2400ST–057	AS REQD.	SCREEN TOP & BOTTOM RAIL	–	–
S1		2/ CORNER	#14 X 1" PH SMS TYPE "B" ST/ST	–	FRAME ASSY SCREWS
S2		2/ CORNER	#10 X 1" PH SMS TYPE "B" ST/ST	–	PANEL ASSY SCREWS
S3		AS REQD.	#10 X 3/4" PH.SMS. ST/ST	–	–
S5		4/ CLIP	1/4–20 X 3/4" LG. SOGKET HEAD CAP SCREW	ST/ST	–
V1	V–019	1/ MOV. PANEL	DRIP SILL VINYL, DUROMETER 65±5 SHORE A	SOFT PVC	–
V2	V–026	AS REQD.	BULB VINYL, DUROMETER 75±5 SHORE A	TPE	MELTPOINT PLASTIC
V3	V–047	AS REQD.	BULB VINYL, DUROMETER 75±5 SHORE A	TPE	MELTPOINT PLASTIC
V6	V–078	AS REQD.	MARINE GLAZING FOR LAM/INS. GLASS NI	TPE	MELTPOINT PLASTIC
M1	U52	–	Q–LON 250T270 @ HEAD ADAPTOR & SILL THRESHOLD	–	–
M2	W31235NIK	AS REQD.	PILE WITH PLASTIC FIN W'STRIPPING	–	–
M3	P–066	AS REQD.	SILICONE BUMPER	–	–
M4	DC995	–	BLACK SILICONE (LMI)	–	–
M5	CCES–1003	–	ROLLER TRACK COVER	ST/ST	–
M6	RC 00151W/D	–	SILL ANCHOR TRACK	6005–T5	6" LONG
H1	PS01–0001–XXX	–	2 POINT LOCK KIT	–	–
H2	PR03–6000	–	ALUMINUM HOUSING W/ ST/ST TANDEM WHEELS	–	–

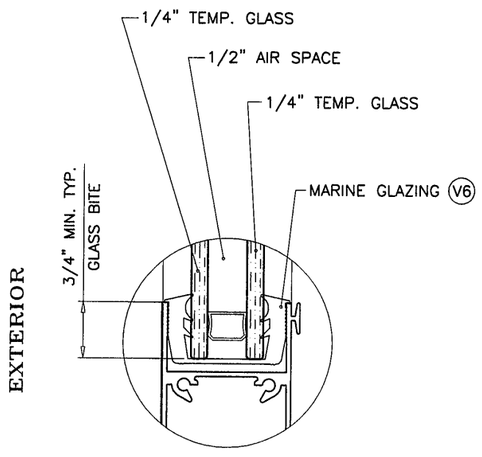

GLAZING DETAIL
1" OVERALL INSUL. GLASS

SEALANTS:

ALL FRAME AND PANEL JOINT, INSTALLATION SCREWS AND HEADS OF ANCHOR SCREWS AT SILL TO BE SEALED WITH WHITE/ALUM COLORED SEALANT.

LOCKS:

THREE PLY METALLIC HOOK LOCK WITH SURFACE MOUNT METALLIC HANDLE AT 42" FROM BOTTOM.
LOCK FASTENED WITH (2) #6 X 1/2" FH MACHINE SCREWS AND HANDLE FASTENED WITH (2) #8 X 2–1/4" OH MACHINE SCREWS.
SURFACE MOUNT METALLIC KEEPERS AT 42" FROM BOTTOM FASTENED WITH (2) #10 X 3/4" PH SMS.

NOTE:
GLASS CAPACITIES ON THIS SHEET ARE BASED ON ASTM E1300–04 (3 SEC. GUSTS) AND FLORIDA BUILDING COMMISSION DECLARATORY STATEMENT DCA05–DEC–219

PRODUCT REVISED
as complying with the Florida Building Code
Acceptance No 12-0604.17
Expiration Date 3/27/18
Miami Dade Product Control

Engr: JAVAD AHMAD
CIVIL
FLA. PE # 70592
C.A.N. 3538
OCT 31 2012

AL-FAROOQ CORPORATION
ENGINEERS & PRODUCT DEVELOPMENT
1235 S.W. 87 AVE
MIAMI, FLORIDA 33174
TEL. (305) 264-8100 FAX. (305) 262-6978

COMP–ANL\W07–102RC

SERIES PH3200 ALUM SLIDING GLASS DOOR (N.I.)

R.C. ALUMINUM INDUSTRIES INC.
2805 N.W. 75 TH AVE.
MIAMI, FL. 33122
TEL. (305) 592–1515 FAX. (305) 592–2184

revisions:

no	date	by	description
A	03.05.09		UPDATED FOR 2007 FBC
B	09.17.10		REV. PER BCCO COMMENTS
C	12.07.10		REV. PER BCCO COMMENTS

date: 11–08–07
scale: –
dr. by: HAMID
chk. by:

drawing no.
W07–102

DESIGN LOAD CAPACITY - PSF (HEAD ANCHORS)

PANEL WIDTH NOMINAL INCHES	DOOR HEIGHT INCHES	1/2" MAX. SHIM SPACE									1/4" MAX. SHIM SPACE			
		ANCHORS 'A'			ANCHORS 'B'			ANCHORS 'C'			ANCHORS 'B'		ANCHORS 'C'	
		4 ANCHORS AT MTG. STILE ENDS	6 ANCHORS AT MTG. STILE ENDS	8 ANCHORS AT MTG. STILE ENDS	4 ANCHORS AT MTG. STILE ENDS	6 ANCHORS AT MTG. STILE ENDS	8 ANCHORS AT MTG. STILE ENDS	8 ANCHORS AT MTG. STILE ENDS	10 ANCHORS AT MTG. STILE ENDS	12 ANCHORS AT MTG. STILE ENDS	4 ANCHORS AT MTG. STILE ENDS	6 ANCHORS AT MTG. STILE ENDS	4 ANCHORS AT MTG. STILE ENDS	6 ANCHORS AT MTG. STILE ENDS
		EXT. (+) INT. (-)	EXT. (+) INT. (-)	EXT. (+) INT. (-)	EXT. (+) INT. (-)	EXT. (+) INT. (-)	EXT. (+) INT. (-)	EXT. (+) INT. (-)	EXT. (+) INT. (-)	EXT. (+) INT. (-)	EXT. (+) INT. (-)	EXT. (+) INT. (-)	EXT. (+) INT. (-)	EXT. (+) INT. (-)
36	80	124.0	186.0	210.0	151.7	210.0	210.0	162.4	203.0	210.0	209.5	209.5	200.0	210.0
42		106.3	159.4	193.7	130.0	193.7	193.7	139.2	174.0	208.8	179.6	179.6	171.4	210.0
48		93.0	139.5	169.5	113.8	169.5	169.5	121.8	152.3	182.7	157.1	157.1	150.0	210.0
54		82.7	124.0	150.7	101.1	150.7	150.7	108.3	135.3	162.4	139.7	139.7	133.3	200.0
60		74.4	111.6	135.6	91.0	135.6	135.6	97.4	121.8	146.2	125.7	125.7	120.0	180.0
36	84	118.1	177.1	210.0	144.5	210.0	210.0	154.7	193.3	210.0	209.5	209.5	190.5	210.0
42		101.2	151.8	193.7	123.8	185.8	193.7	132.6	165.7	198.9	179.6	179.6	163.3	210.0
48		88.6	132.9	169.5	108.4	162.6	169.5	116.0	145.0	174.0	157.1	157.1	142.9	210.0
54		78.7	118.1	150.7	96.3	144.5	150.7	103.1	128.9	154.7	139.7	139.7	127.0	190.5
60		70.9	106.3	135.6	86.7	130.1	135.6	92.8	116.0	139.2	125.7	125.7	114.3	171.4
36	90	110.2	165.3	210.0	134.8	202.3	210.0	144.4	180.4	210.0	209.5	209.5	177.8	210.0
42		94.5	141.7	189.0	115.6	173.4	193.7	123.7	154.7	185.6	176.8	179.6	152.4	210.0
48		82.7	124.0	165.3	101.1	151.7	169.5	108.3	135.3	162.4	154.7	157.1	133.3	200.0
54		73.5	110.2	147.0	89.9	134.9	150.7	96.2	120.3	144.4	137.5	139.7	118.5	177.8
60		66.1	99.2	132.3	80.9	121.4	135.6	86.6	108.3	129.9	123.7	125.7	106.7	160.0
36	96	103.3	155.0	206.7	126.4	189.7	210.0	135.3	169.2	203.0	193.3	209.5	166.7	210.0
42		88.6	132.9	177.1	108.4	162.6	193.7	116.0	145.0	174.0	165.7	179.6	142.9	210.0
48		77.5	116.3	155.0	94.8	142.3	169.5	101.5	126.9	152.3	145.0	157.1	125.0	187.5
54		68.9	103.3	137.8	84.3	126.4	150.7	90.2	112.8	135.3	128.9	139.7	111.1	166.7
36	102	97.3	145.9	194.5	119.0	178.5	210.0	127.4	159.2	191.1	182.0	209.5	156.9	210.0
42		83.4	125.0	166.7	102.0	153.0	193.7	109.2	136.5	163.8	156.0	179.6	134.5	201.7
48		72.9	109.4	145.9	89.2	133.9	169.5	95.5	119.4	143.3	136.5	157.1	117.6	176.5
54		64.8	97.3	129.7	79.3	119.0	150.7	84.9	106.1	127.4	121.3	139.7	104.6	156.9
36	108	91.9	137.8	183.7	112.4	168.6	210.0	120.3	150.4	180.4	171.9	209.5	148.1	210.0
42		78.7	118.1	157.5	96.3	144.5	193.7	103.1	128.9	154.7	147.3	179.6	127.0	190.5
48		68.9	103.3	137.8	84.3	126.4	168.6	90.2	112.8	135.3	128.9	157.1	111.1	166.7
36	114	87.0	130.5	174.0	106.5	159.7	210.0	114.0	142.5	170.9	162.8	209.5	140.4	210.0
42		74.6	111.9	149.2	91.2	136.9	182.5	97.7	122.1	146.5	139.5	179.6	120.3	180.5
48		65.3	97.9	130.5	79.8	119.8	159.7	85.5	106.8	128.2	122.1	157.1	105.3	157.9
36	119	83.4	125.0	166.7	102.0	153.0	204.0	109.2	136.5	163.8	156.0	209.5	134.5	201.7
42		71.5	107.2	142.9	87.4	131.2	174.8	93.6	117.0	140.4	133.7	179.6	115.2	172.9
48		62.5	93.8	125.0	76.5	114.8	153.0	81.9	102.4	122.8	117.0	157.1	100.8	151.3
36	120	82.7	124.0	165.3	101.1	151.7	202.3	108.3	135.3	162.4	154.7	209.5	133.3	200.0
42		70.9	106.3	141.7	86.7	130.1	173.4	92.8	116.0	139.2	132.6	179.6	114.3	171.4
36	126	78.7	118.1	157.5	96.3	144.5	192.6	103.1	128.9	154.7	147.3	209.5	127.0	190.5
42		67.5	101.2	135.0	82.6	123.9	165.1	88.4	110.5	132.6	126.3	179.6	108.8	163.3
36	132	75.2	112.7	150.3	91.9	137.9	183.9	98.4	123.0	147.6	140.6	209.5	121.2	181.8
42		64.4	96.6	128.8	78.8	118.2	157.6	84.4	105.5	126.5	120.5	179.6	103.9	155.8
36	144	68.9	103.3	137.8	84.3	126.4	168.6	90.2	112.8	135.3	128.9	193.3	111.1	166.7

DESIGN LOAD CAPACITY - PSF SILL ANCHORS (TYPE A)

PANEL WIDTH NOMINAL INCHES	DOOR HEIGHT INCHES	4 ANCHORS AT MTG. STILE ENDS	6 ANCHORS AT MTG. STILE ENDS
		EXT. (+) INT. (-)	EXT. (+) INT. (-)
36	80	210.0	210.0
42		198.9	193.7
48		169.5	169.5
54		150.7	150.7
60		139.2	135.6
36	84	210.0	210.0
42		189.4	193.7
48		165.7	169.5
54		147.3	150.7
60		132.6	135.6
36	90	206.2	210.0
42		176.8	193.7
48		154.7	169.5
54		137.5	150.7
60		123.7	135.6
36	96	193.3	210.0
42		165.7	193.7
48		145.0	169.5
54		128.9	150.7
36	102	182.0	210.0
42		156.0	193.7
48		136.5	169.5
54		121.3	150.7
36	108	171.9	210.0
42		147.3	193.7
48		128.9	169.5
36	114	162.8	210.0
42		139.5	193.7
48		122.1	169.5
36	119	156.0	210.0
42		133.7	193.7
48		117.0	169.5
36	120	154.7	210.0
42		132.6	193.7
36	126	147.3	210.0
42		126.3	189.4
36	132	140.6	210.0
42		120.5	180.8
36	144	128.9	193.3

NOTE:
SEE SHEET 2 FOR DESIGN LOAD CAPACITY OF DESIRED GLASS SIZE.
USING CHART ON THIS SHEET SELECT ANCHOR OPTION WITH DESIGN RATING MORE THAN DESIGN LOADS REQUIRED.
LOWER DESIGN PRESSURES FROM GLASS OR HEAD, SILL ANCHOR CHARTS WILL APPLY TO ENTIRE SYSTEM.

Engr: JAVAD AHMAD
CIVIL
FLA. PE # 70592
C.A.N. 3538

OCT 31 2012

PRODUCT REVISED
as complying with the Florida Building Code
Acceptance No. 09-0604-17
Expiration Date 3/27/18
[illegible] Product Control

AL-FAROOQ CORPORATION
ENGINEERS & PRODUCT DEVELOPMENT
1235 S.W. 87 AVE
MIAMI, FLORIDA 33174
TEL. (305) 264-8100 FAX. (305) 262-6978

COMP-ANL\W07-102RC

SERIES PH3200 ALUM SLIDING GLASS DOOR (N.I.)

R.C. ALUMINUM INDUSTRIES INC.
2805 N.W. 75 TH AVE.
MIAMI, FL. 33122
TEL. (305) 592-1515 FAX. (305) 592-2184

revisions:			
no	date	by	description
A	03.05.09		UPDATED FOR 2007 FBC
B	09.17.10		REV. PER BCCO COMMENTS
C	12.07.10		REV. PER BCCO COMMENTS

date: 11-08-07
scale: -
dr. by: HAMID
chk. by:

drawing no.
W07-102

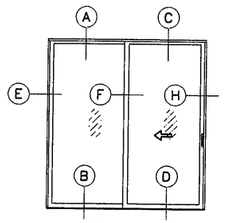

OX (SHOWN)
XO

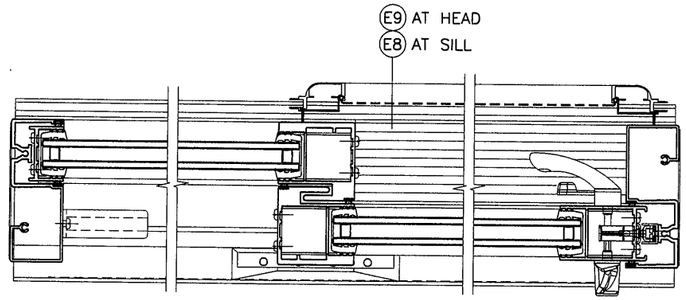

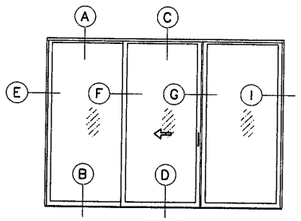

OXO

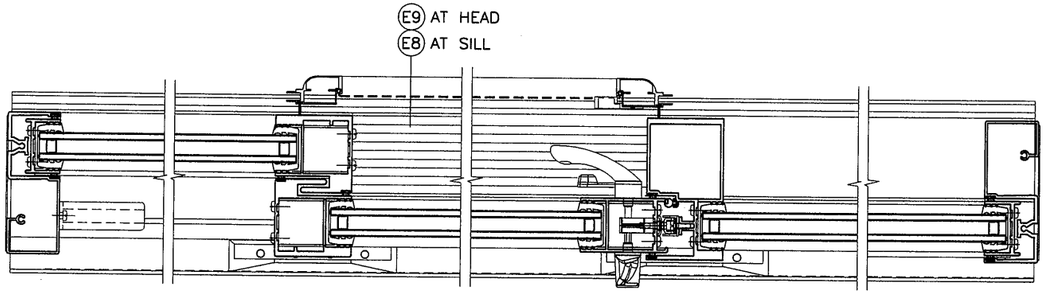

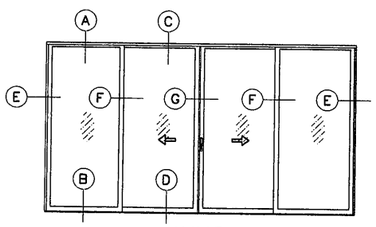

OXXO

APPROVED CONFIGURATIONS

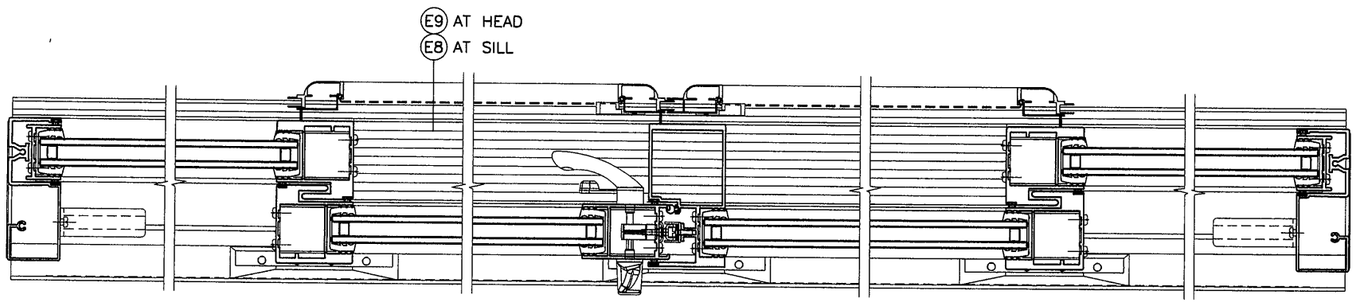

HORIZONTAL CROSS SECTION FOR ILLUSTRATION ONLY.
SEE SHEETS 5, 6 & 7 FOR INSTALLATION ANCHORS.

PRODUCT REVISED
as complying with the Florida
Building Code
Acceptance No 09-0604.17
Expiration Date 3/27/18
By [signature]
Miami Dade Product Control

Engr: JAVAD AHMAD
CIVIL
FLA. PE # 70592
C.A.N. 3538

OCT 31 2012

AL-FAROOQ CORPORATION
ENGINEERS & PRODUCT DEVELOPMENT
1235 S.W. 87 AVE
MIAMI, FLORIDA 33174
TEL. (305) 264-8100 FAX. (305) 262-6978
COMP-ANL\W07-102RC

SERIES PH3200 ALUM SLIDING GLASS DOOR (N.I.)

R.C. ALUMINUM INDUSTRIES INC.
2805 N.W. 75 TH AVE.
MIAMI, FL. 33122
TEL. (305) 592-1515 FAX. (305) 592-2184

revisions:

no	date	by	description
B	09.17.10		REV. PER BCCO COMMENTS
C	12.07.10		REV. PER BCCO COMMENTS

date: 11-08-07
scale: -
dr. by: HAMID
chk. by:

drawing no.
W07-102

sheet 4 of 9

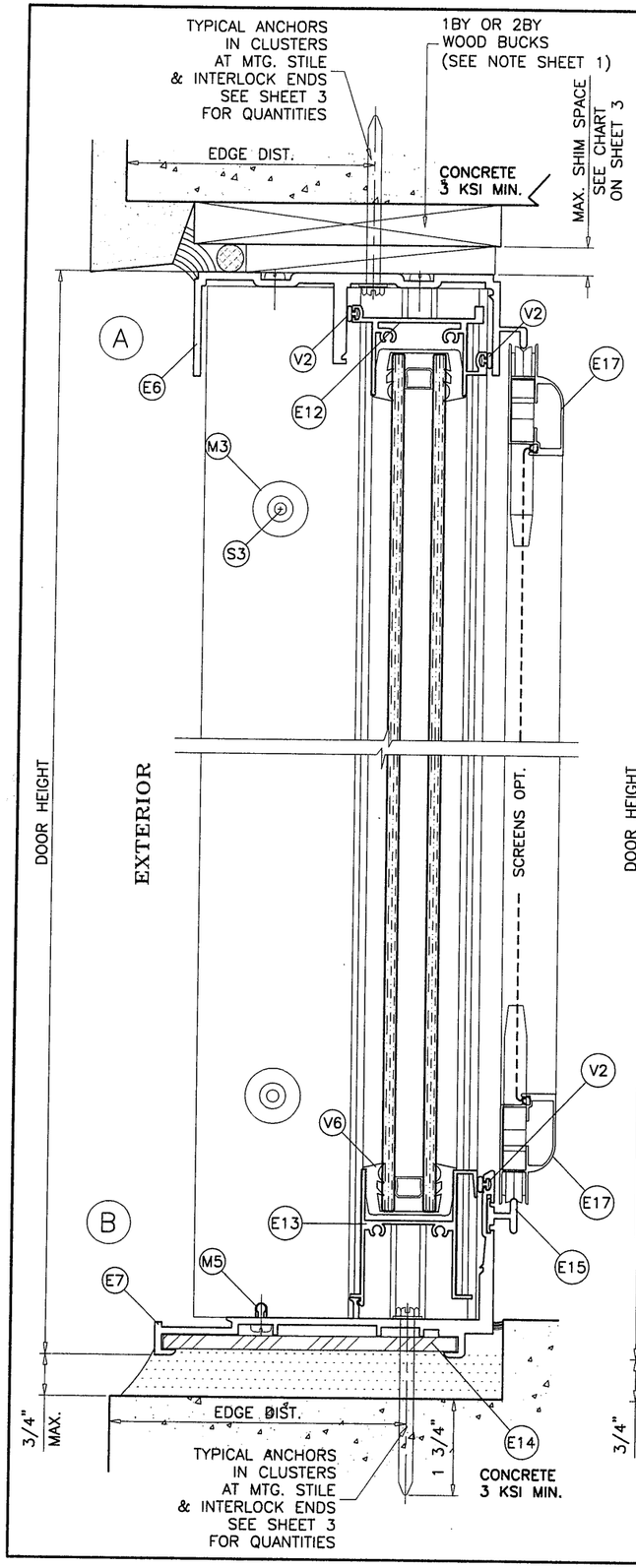

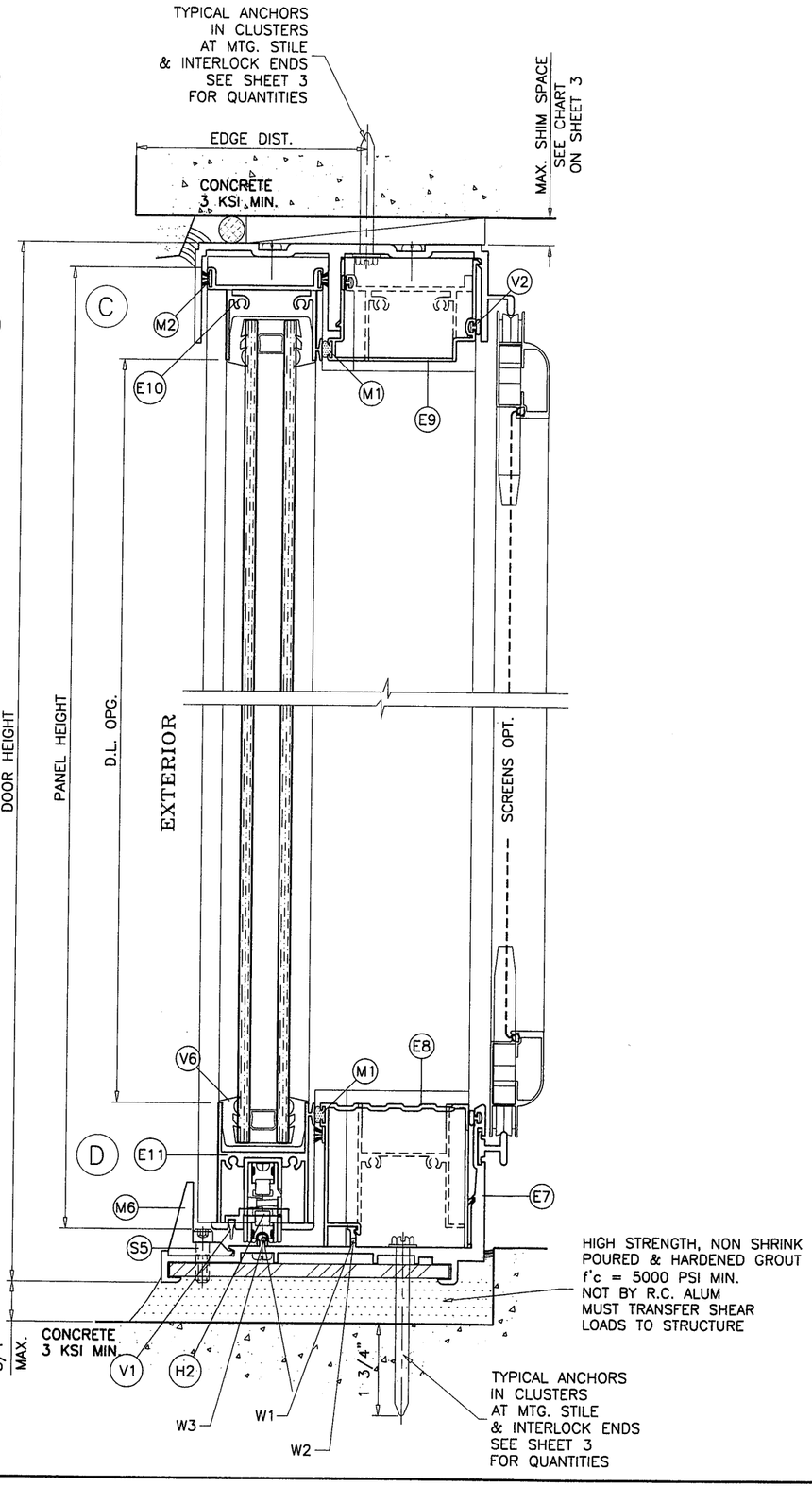

PRODUCT REVISED
as complying with the Florida Building Code
Acceptance No. 09-0604.17
Expiration Date 3/27/18
By Ishaq I. Chaudhary
Miami Dade Product Control

WEEPS:

W1 = 3/4" WEEP NOTCH AT EACH END OF EACH TRACK
W2 = 1-3/4" NOTCH AT MIDSPAN OF FIX. PANEL TRACK
W3 = 2-1/2" NOTCH AT MIDSPAN OF MOV. PANEL TRACK

Engr: JAVAD AHMAD
CIVIL
FLA. PE # 70592
C.A.N. 35538
OCT 31 2012

AL-FAROOQ CORPORATION
ENGINEERS & PRODUCT DEVELOPMENT
1235 S.W. 87 AVE
MIAMI, FLORIDA 33174
TEL. (305) 264-8100 FAX. (305) 262-6978

COMP-ANL\W07-102RC

SERIES PH3200 ALUM SLIDING GLASS DOOR (N.I.)

R.C. ALUMINUM INDUSTRIES INC.
2805 N.W. 75 TH AVE.
MIAMI, FL. 33122
TEL. (305) 592-2184 FAX. (305) 592-2184

revisions:

no	date	by	description
A	03.05.09		UPDATED FOR 2007 FBC
B	09.17.10		REV. PER BCCO COMMENTS
C	12.07.10		REV. PER BCCO COMMENTS

date: 11-08-07
scale: 3/8" = 1"
dr. by: HAMID
chk. by:

drawing no.
W07-102

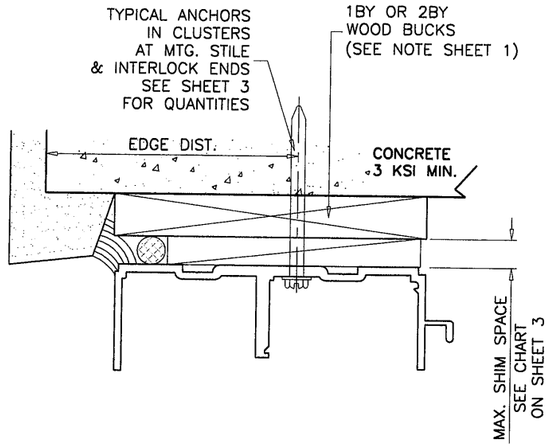

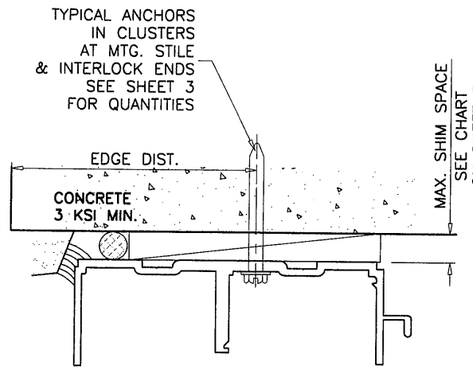

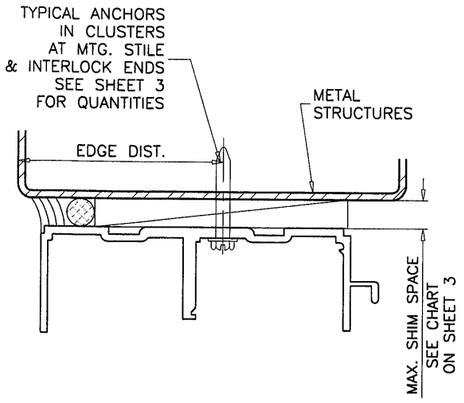

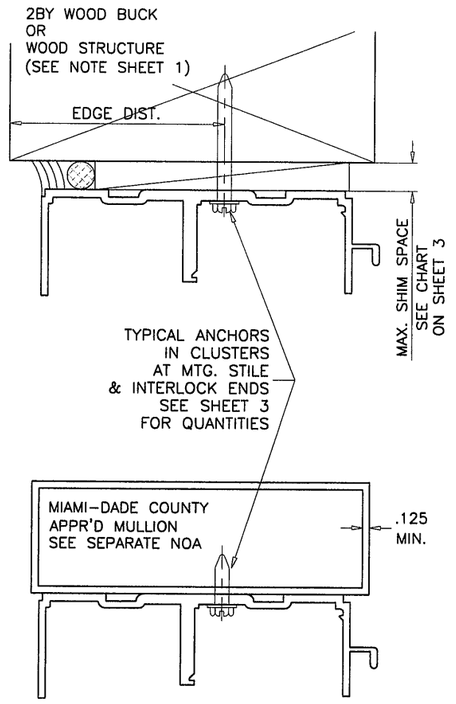

TYPICAL ANCHORS: SEE ELEV. FOR SPACING

AT HEAD

TYPE 'A'– 1/4" X 2-3/4" HILTI KWIK-CON II (Fu=163 KSI, Fy=157 KSI)
THRU 1BY OR 2BY WOOD BUCKS INTO CONCRETE

TYPE 'B'– 1/4" X 2-3/4" HILTI KWIK-CON II (Fu=163 KSI, Fy=157 KSI)
DIRECTLY INTO CONCRETE, 1-3/4" MIN. EMBEDMENT

TYPE 'C'– 1/4" DIA. TEKS OR SELF DRILLING SCREWS (Fu=92 KSI, Fy=120 KSI)
INTO METAL STRUCTURES OR APPROVED MULLIONS
STEEL : 1/8" THK. MIN. (Fy = 36 KSI MIN.)
ALUMINUM : 1/8" THK. MIN. (6063-T5 MIN.)
(STEEL IN CONTACT WITH ALUMINUM TO BE PLATED OR PAINTED)

AT SILL

TYPE 'A'– 1/4" DIA. HILTI KWIK-CON II (Fu=163 KSI, Fy=157 KSI)
DIRECTLY INTO CONCRETE, 1-3/4" MIN. EMBEDMENT

AT JAMBS

TYPE 'A'– 1/4" DIA. HILTI KWIK-CON II (Fu=163 KSI, Fy=157 KSI)
THRU 1BY BUCKS, 1-1/4" MIN. CONC. OR MASONRY EMBED.
INTO 2BY BUCKS, 1-1/2" MIN. WOOD EMBEDMENT

TYPE 'B'– 1/4" DIA. HILTI KWIK-CON II (Fu=163 KSI, Fy=157 KSI)
DIRECTLY INTO MASONRY OR CONCRETE
1-1/4" MIN. MASONRY OR CONCRETE EMBEDMENT

TYPE 'C'– 1/4" DIA. TEKS OR SELF DRILLING SCREWS (Fu=92 KSI, Fy=120 KSI)
INTO METAL STRUCTURES OR APPROVED MULLIONS
STEEL : 1/8" THK. MIN. (Fy = 36 KSI MIN.)
ALUMINUM : 1/8" THK. MIN. (6063-T5 MIN.)
(STEEL IN CONTACT WITH ALUMINUM TO BE PLATED OR PAINTED)

ANCHOR EDGE DISTANCES

INTO CONCRETE = 2-1/2" MIN.
INTO WOOD STRUCTURE = 1" MIN.
INTO METAL STRUCTURE = 3/4" MIN.

CONCRETE AT HEAD, SILL OR JAMBS f'c = 3000 PSI MIN.
C-90 HOLLOW/FILLED BLOCK AT JAMBS f'm = 1500 PSI MIN.

1BY OR 2BY WOOD BUCKS AND METAL STRUCTURES NOT BY RC ALUM MUST SUPPORT LOADS IMPOSED BY GLAZING SYSTEM AND TRANSFER THEM TO THE BUILDING STRUCTURE.

PRODUCT REVISED
in complying with the Florida Building Code
Acceptance No. 09-0604.17
Expiration Date 3/27/18
By Glenn J. Gaul
Miami Dade Product Control

Engr: JAVAD AHMAD
CIVIL
FLA. PE # 70592
C.A.N. 3538
OCT 31 2012

AL-FAROOQ CORPORATION
ENGINEERS & PRODUCT DEVELOPMENT
1235 S.W. 87 AVE
MIAMI, FLORIDA 33174
TEL. (305) 264-8100 FAX. (305) 262-6978
COMP-ANL\W07-102RC

R.C. ALUMINUM INDUSTRIES INC.
2805 N.W. 75 TH AVE.
MIAMI, FL. 33122
TEL. (305) 592-1515 FAX. (305) 592-2184

SERIES PH3200 ALUM SLIDING GLASS DOOR (N.I.)

revisions:

no	date	by	description
B	09.17.10		REV. PER BCCO COMMENTS
C	12.07.10		REV. PER BCCO COMMENTS

date: 11-08-07
scale: 3/8" = 1"
dr. by: HAMID
chk. by:

drawing no.
W07-102

sheet 6 of 9

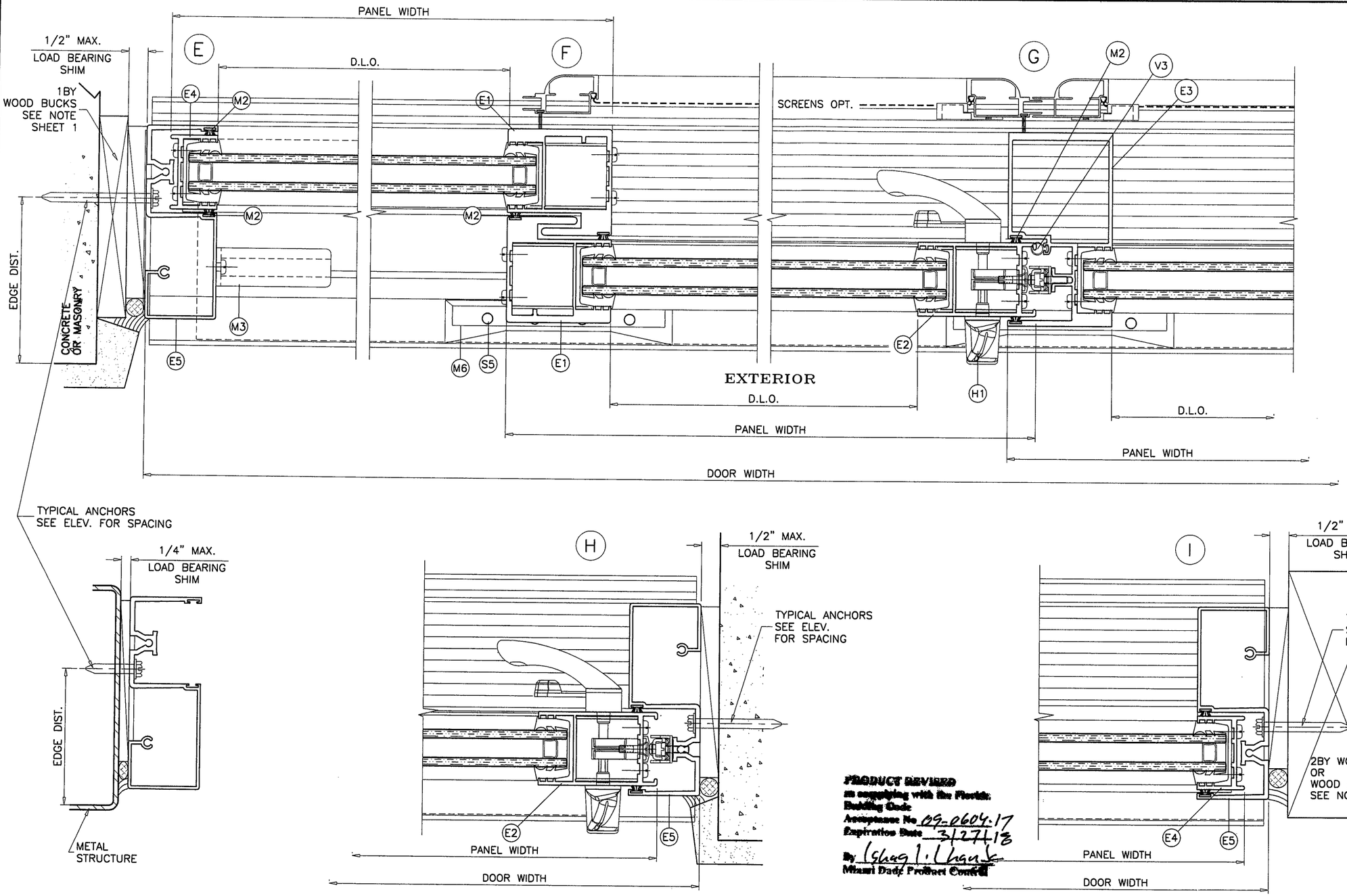

PRODUCT REVISED
in complying with the Florida Building Code
Acceptance No 09-0604.17
Expiration Date 3/27/13
By Ishaq I. Khan
Miami Dade Product Control

Engr: JAVAD AHMAD
CIVIL
FLA. PE # 70592
C.A.N. 3538

OCT 31 2012

AL-FAROOQ CORPORATION
ENGINEERS & PRODUCT DEVELOPMENT
1235 S.W. 87 AVE
MIAMI, FLORIDA 33174
TEL. (305) 264-8100 FAX. (305) 262-6978

COMP-ANL\W07-102RC

SERIES PH3200 ALUM SLIDING GLASS DOOR (N.I.)

R.C. ALUMINUM INDUSTRIES INC.
2805 N.W. 75 TH AVE.
MIAMI, FL. 33122
TEL. (305) 592-1515 FAX. (305) 592-2184

revisions:			
no	date	by	description
A	03.05.09		UPDATED FOR 2007 FBC
B	09.17.10		REV. PER BCCO COMMENTS
C	12.07.10		REV. PER BCCO COMMENTS

date: 11-08-07
scale: 3/8" = 1"
dr. by: HAMID
chk. by:

drawing no.
W07-102

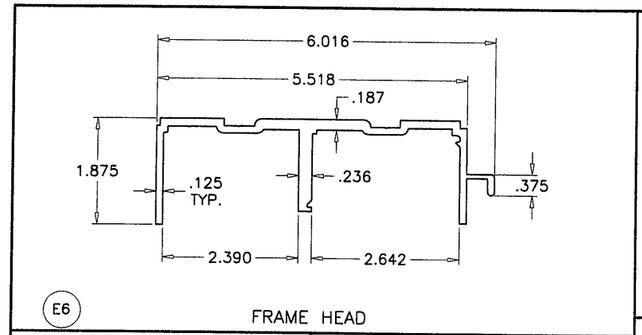

E6 FRAME HEAD

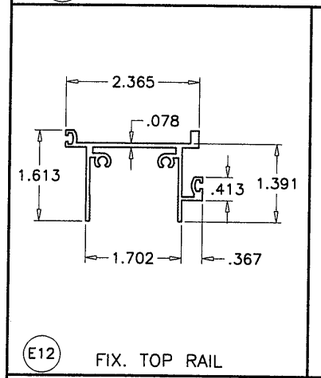

E12 FIX. TOP RAIL

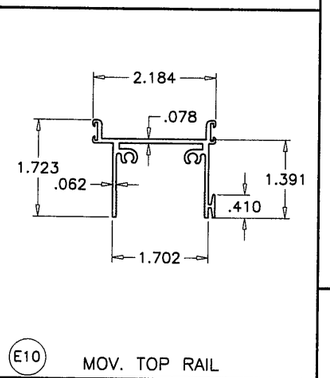

E10 MOV. TOP RAIL

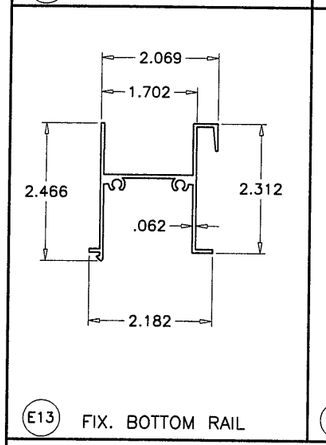

E13 FIX. BOTTOM RAIL

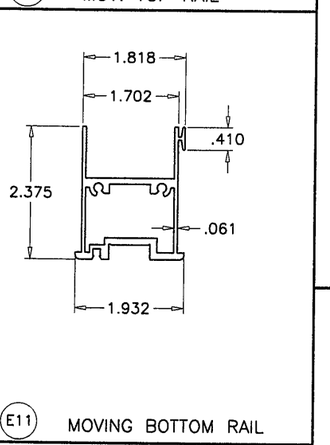

E11 MOVING BOTTOM RAIL

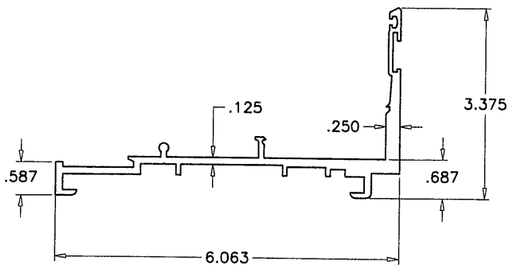

E7 FRAME SILL

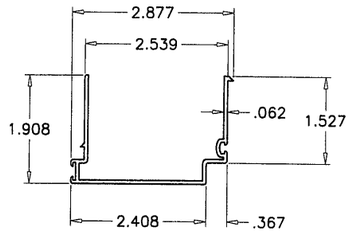

E9 HEAD COVER

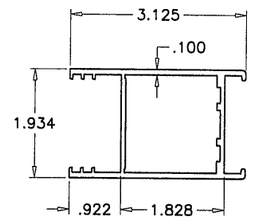

E2 LOCK STILE

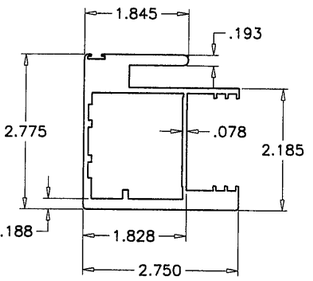

E1 INTERLOCK

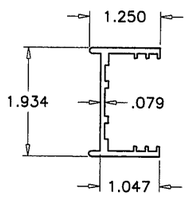

E4 FIXED STILE

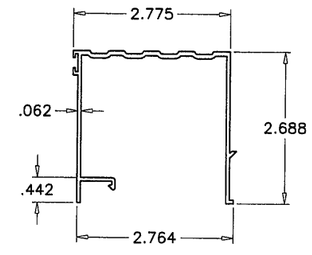

E8 THRESHOLD COVER

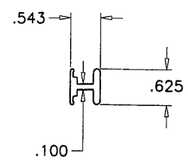

E15 INSIDE SILL TRACK

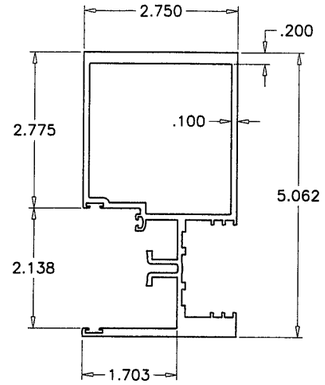

E3 MTG. STILE

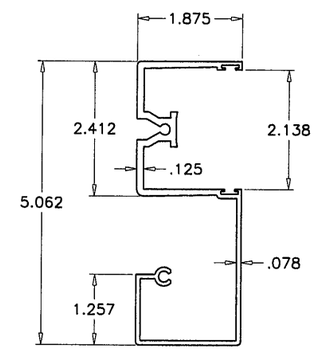

E5 FRAME JAMB

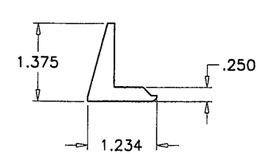

M6 SILL ANCHOR

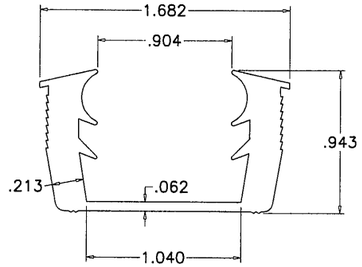

V6 MARINE GLAZING

HARDNESS = 70 SHORE A
TENSILE STRENGTH (BREAK)= 2000 PSI
ELONGATION AT BREAK = 600%
TEAR STRENGTH = 250 LBS/IN
SPECIFIC GRAVITY = .928

PRODUCT REVISED
as complying with the Florida
Building Code
Acceptance No 09-0604.17
Expiration Date 3/27/18
By Ishag I. Chaudhuri
Miami Dade Product Control

Engr: JAVAD AHMAD
CIVIL
FLA. PE # 70592
C.A.N. 3538

OCT 31 2012

AL-FAROOQ CORPORATION
ENGINEERS & PRODUCT DEVELOPMENT
1235 S.W. 87 AVE
MIAMI, FLORIDA 33174
TEL. (305) 264-8100 FAX. (305) 262-6978

COMP-ANL\W07-102RC

SERIES PH3200 ALUM SLIDING GLASS DOOR (N.I.)

R.C. ALUMINUM INDUSTRIES INC.
2805 N.W. 75 TH AVE.
MIAMI, FL. 33122
TEL. (305) 592-1515 FAX. (305) 592-2184

revisions:

no	date	by	description
A	03.05.09		UPDATED FOR 2007 FBC
B	09.17.10		REV. PER BCCO COMMENTS
C	12.07.10		NO CHANGE THIS SHEET

date: 11-08-07
scale: 3/8" = 1"
dr. by: HAMID
chk. by:

drawing no.
W07-102

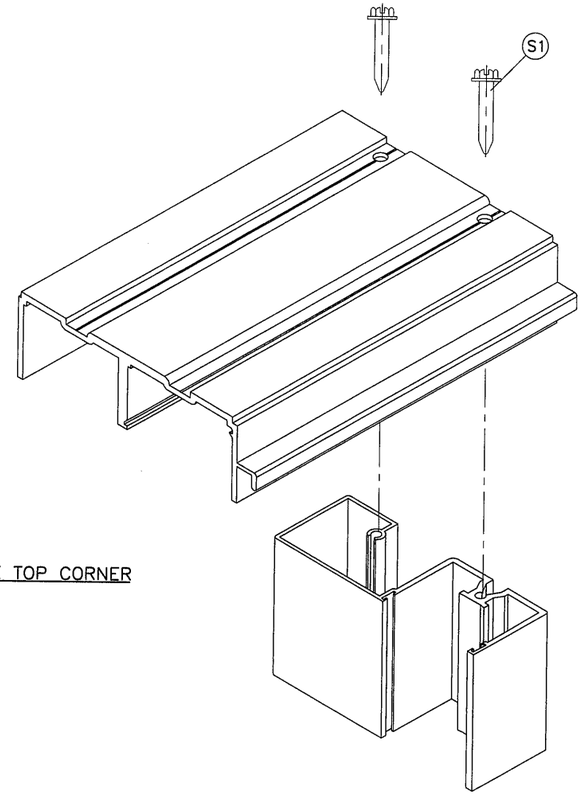

FRAME TOP CORNER

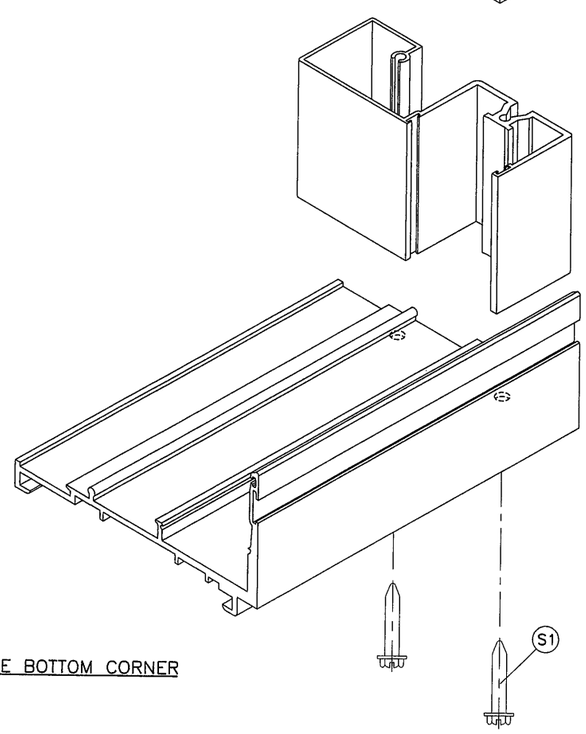

FRAME BOTTOM CORNER

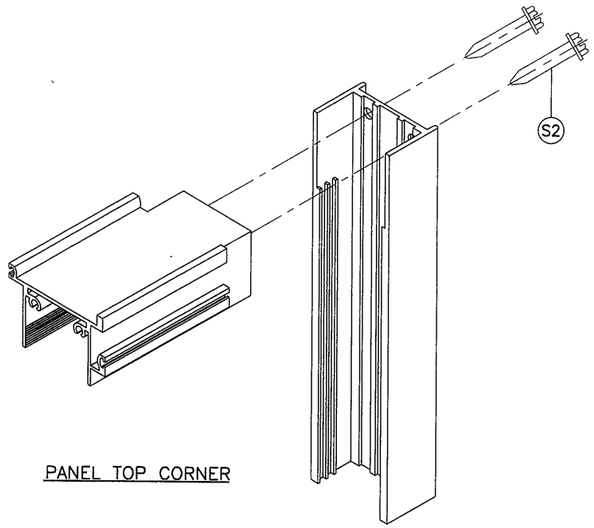

PANEL TOP CORNER

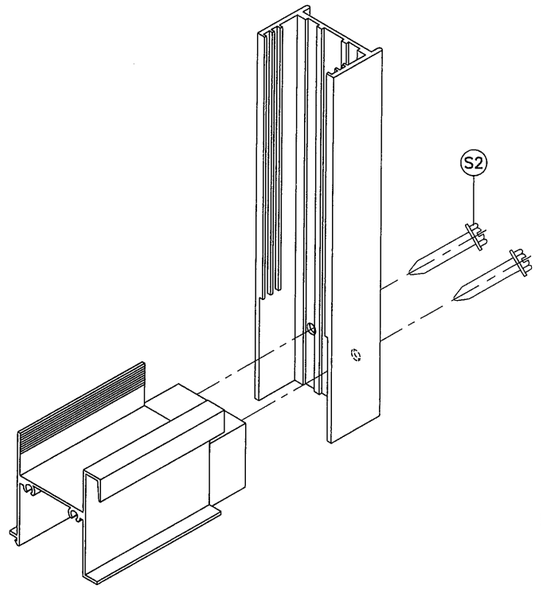

PANEL BOTTOM CORNER

PRODUCT REVISED
as complying with the Florida
Building Code
Acceptance No 09-0604.17
Expiration Date MAR 27, 2018
By Ishag I. Chanda
Miami Dade Product Control

Engr: JAVAD AHMAD
CIVIL
FLA. PE # 70592
C.A.N. 3538

OCT 31 2012

afc

AL-FAROOQ CORPORATION
ENGINEERS & PRODUCT DEVELOPMENT
1235 S.W. 87 AVE
MIAMI, FLORIDA 33174
TEL. (305) 264-8100 FAX. (305) 262-6978

COMP-ANL\W07-102RC

SERIES PH3200 ALUM SLIDING GLASS DOOR (N.I.)

R.C. ALUMINUM INDUSTRIES INC.
2805 N.W. 75 TH AVE.
MIAMI, FL. 33122
TEL. (305) 592-1515 FAX. (305) 592-2184

revisions:

no	date	by	description
A	03.05.09		UPDATED FOR 2007 FBC
B	09.17.10		NO CHANGE THIS SHEET
C	12.07.10		NO CHANGE THIS SHEET

date: 11-08-07
scale: 3/8" = 1"
dr. by: HAMID
chk. by:

drawing no.
W07-102

sheet 9 of 9