MIAMI-DADE COUNTY

BUILDING CODE COMPLIANCE OFFICE (BCCO)
PRODUCT CONTROL DIVISION

MIAMI-DADE COUNTY, FLORIDA
METRO-DADE FLAGLER BUILDING
140 WEST FLAGLER STREET, SUITE 1603
MIAMI, FLORIDA 33130-1563
(305) 375-2901 FAX (305) 372-6339
www.miamidade.gov/buildingcode

NOTICE OF ACCEPTANCE (NOA)

R.C. Aluminum Industries, Inc.
2805 NW 75th Avenue
Miami, FL 33122

SCOPE:

This NOA is being issued under the applicable rules and regulations governing the use of construction materials. The documentation submitted has been reviewed by Miami-Dade County Product Control Division and accepted by the Board of Rules and Appeals (BORA) to be used in Miami Dade County and other areas where allowed by the Authority Having Jurisdiction (AHJ).

This NOA shall not be valid after the expiration date stated below. The Miami-Dade County Product Control Division (In Miami Dade County) and/or the AHJ (in areas other than Miami Dade County) reserve the right to have this product or material tested for quality assurance purposes. If this product or material fails to perform in the accepted manner, the manufacturer will incur the expense of such testing and the AHJ may immediately revoke, modify, or suspend the use of such product or material within their jurisdiction. BORA reserves the right to revoke this acceptance, if it is determined by Miami-Dade County Product Control Division that this product or material fails to meet the requirements of the applicable building code. This product is approved as described herein, and has been designed to comply with the Florida Building Code, including the High Velocity Hurricane Zone.

DESCRIPTION: Series "PH4400" Aluminum Single Hung Window – L.M.I.

APPROVAL DOCUMENT: Drawing No. **W08-78**, titled "Series PH4400 Alum. Single Hung Window (L.M.I.)", sheets 1 through 8 of 8, dated 09/10/08, with revision A dated 07/09/10, prepared by Al-Farooq Corporation, signed and sealed by Javad Ahmad, P.E., bearing the Miami-Dade County Product Control Approval stamp with the Notice of Acceptance number and approval date by the Miami-Dade County Product Control Division.

MISSILE IMPACT RATING: Large and Small Missile Impact Resistant

LABELING: Each unit shall bear a permanent label with the manufacturer's name or logo, city, state and following statement: "Miami-Dade County Product Control Approved", unless otherwise noted herein.

RENEWAL of this NOA shall be considered after a renewal application has been filed and there has been no change in the applicable building code negatively affecting the performance of this product.

TERMINATION of this NOA will occur after the expiration date or if there has been a revision or change in the materials, use, and/or manufacture of the product or process. Misuse of this NOA as an endorsement of any product, for sales, advertising or any other purposes shall automatically terminate this NOA. Failure to comply with any section of this NOA shall be cause for termination and removal of NOA.

ADVERTISEMENT: The NOA number preceded by the words Miami-Dade County, Florida, and followed by the expiration date may be displayed in advertising literature. If any portion of the NOA is displayed, then it shall be done in its entirety.

INSPECTION: A copy of this entire NOA shall be provided to the user by the manufacturer or its distributors and shall be available for inspection at the job site at the request of the Building Official.

This NOA and consists of this page 1, Evidence pages E-1 and E-2, as well as approval document mentioned above.

The submitted documentation was reviewed by **Manuel Perez, P.E.**

MIAMI-DADE COUNTY APPROVED

R.C. Aluminum Industries, Inc.

NOTICE OF ACCEPTANCE: EVIDENCE SUBMITTED

A. DRAWINGS

1. Manufacturer's die drawings and sections.
2. Drawing No **W08-78**, Sheets 1 through 8 of 8, titled "Series PH4400 Alum. Single Hung Window (L.M.I.)", dated 09/10/08 with revision A dated 07/09/10, prepared by Al-Farooq Corporation, signed and sealed by Javad Ahmad, P.E.

B. TESTS

1. Test reports on: 1) Air Infiltration Test, per FBC, TAS 202-94
   2) Uniform Static Air Pressure Test, Loading per FBC, TAS 202-94
   3) Water Resistance Test, per FBC, TAS 202-94
   4) Small Missile Impact Test per FBC, TAS 201-94
   5) Cyclic Wind Pressure Loading per FBC, TAS 203-94
   6) Kinetic Energy Drop Load Test (400 Ft. Lb.), per ANSI Z97.1

   along with marked-up drawings and installation diagram of a series PH4400 aluminum single hung window, prepared by Fenestration Testing Laboratory, Inc., Test Report No. **FTL-5505,** dated 03/20/08, signed and sealed by Carlos S. Rionda, P.E.
2. Test reports on: 1) Small Missile Impact Test per FBC, TAS 201-94
   2) Cyclic Wind Pressure Loading per FBC, TAS 203-94
   3) Kinetic Energy Drop Load Test (400 Ft. Lb.), per ANSI Z97.1

   along with marked-up drawings and installation diagram of a series PH4400 aluminum single hung window, prepared by Fenestration Testing Laboratory, Inc., Test Report No. **FTL-5504,** dated 01/14/08, signed and sealed by Carlos S. Rionda, P.E.
3. Test reports on: 1) Air Infiltration Test, per FBC, TAS 202-94
   2) Uniform Static Air Pressure Test, Loading per FBC, TAS 202-94
   3) Water Resistance Test, per FBC, TAS 202-94
   4) Large Missile Impact Test per FBC, TAS 201-94
   5) Cyclic Wind Pressure Loading per FBC, TAS 203-94
   6) Kinetic Energy Drop Load Test (400 Ft. Lb.), per ANSI Z97.1

   along with marked-up drawings and installation diagram of a series PH4400 aluminum single hung window, prepared by Fenestration Testing Laboratory, Inc., Test Report No. **FTL-5470,** dated 03/20/08, signed and sealed by Carlos S. Rionda, P.E.
4. Test reports on: 1) Large Missile Impact Test per FBC, TAS 201-94
   2) Cyclic Wind Pressure Loading per FBC, TAS 203-94
   3) Kinetic Energy Drop Load Test (400 Ft. Lb.), per ANSI Z97.1

   along with marked-up drawings and installation diagram of a series PH4400 aluminum single hung window, prepared by Fenestration Testing Laboratory, Inc., Test Report No. **FTL-5469,** dated 02/19/08, signed and sealed by Carlos S. Rionda, P.E.

Manuel Perez

Manuel Perez, P.E.
Product Control Examiner
NOA No. 09-0604.21
Expiration Date: August 04, 2015
Approval Date: August 04, 2010

NOTICE OF ACCEPTANCE: EVIDENCE SUBMITTED

B. TESTS (CONTINUED)

5. Test reports on: 1) Air Infiltration Test, per FBC, TAS 202-94
   2) Uniform Static Air Pressure Test, Loading per FBC, TAS 202-94
   3) Water Resistance Test, per FBC, TAS 202-94

   along with marked-up drawings and installation diagram of a series PH4400 aluminum single hung window, prepared by Fenestration Testing Laboratory, Inc., Test Report No. **FTL-5155,** dated 02/27/07, signed and sealed by Carlos S. Rionda, P.E.

C. CALCULATIONS

1. Anchor verification calculations and structural analysis, complying with FBC-2007, prepared by Al-Farooq Corporation, dated 03/18/09 and 07/09/10, signed and sealed by Javad Ahmad, P.E.
   Complies with ASTM E1300-04

D. QUALITY ASSURANCE

1. Miami Dade Building Code Compliance Office (BCCO).

E. MATERIAL CERTIFICATIONS

1. Notice of Acceptance No. **09-0312.03** issued to E.I. DuPont DeNemours & Co., Inc. for their "**DuPont Sentry Glass® Interlayer**" dated 05/13/09, expiring on 01/14/12.

F. STATEMENTS

1. Statement letter of conformance and no financial interest, dated July 9, 2010, signed and sealed by Javad Ahmad, P.E.
2. Proposal # **06-0204** issued by BCCO to R.C. Aluminum Industries, Inc., dated 03/28/08, signed by Ishaq I. Chanda, P.E., Product Control Division.

G. OTHER

1. None.

Manuel Perez, P.E.
Product Control Examiner
NOA No. 09-0604.21
Expiration Date: August 04, 2015
Approval Date: August 04, 2010

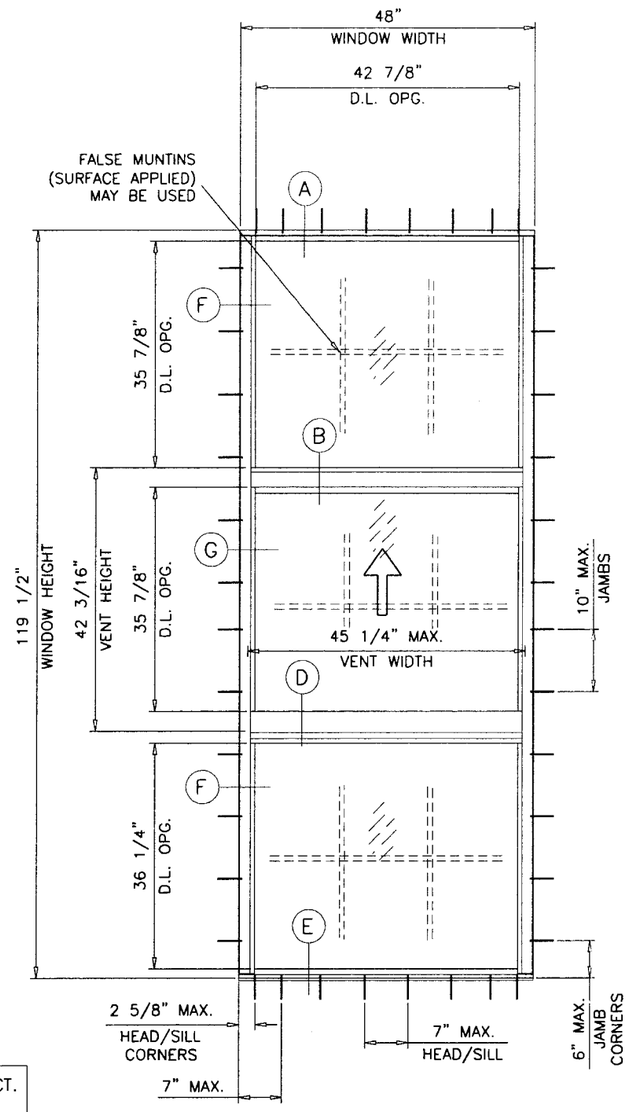

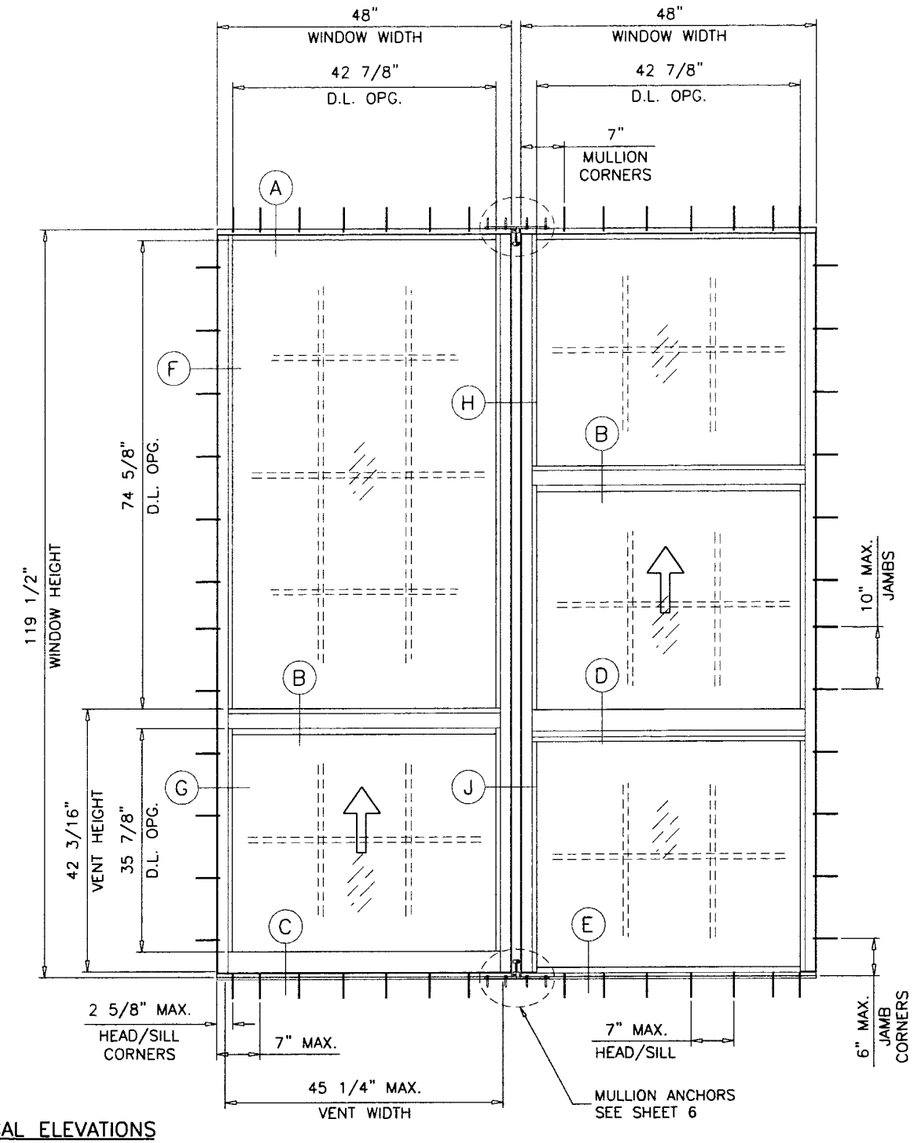

TYPICAL ELEVATIONS

TESTED UNITS

THESE WINDOWS ARE RATED FOR LARGE & SMALL MISSILE IMPACT. SHUTTERS ARE NOT REQUIRED.

SERIES PH4400
ALUMINUM SINGLE HUNG WINDOW

APPROVAL APPLIES TO SINGLE UNITS OR SIDE BY SIDE COMBINATIONS OF S.H. TO S.H. OR S.H./FIX. TO S.H./FIX. IN MODULES OF TWO OR MORE WINDOWS USING MIAMI-DADE COUNTY APPROVED MULLIONS IN BETWEEN.

FOR WINDOWS CAPACITY SEE CHARTS ON SHEET 2.

FOR MULLION CAPACITY SEE CHART ON SHEET 3.

LOWER DESIGN PRESSURES FROM WINDOW CAPACITY CHART OR MULLION CAPACITY CHART WILL APPLY TO ENTIRE SYSTEM.

THIS PRODUCT HAS BEEN DESIGNED AND TESTED TO COMPLY WITH THE REQUIREMENTS OF THE FLORIDA BUILDING CODE 2007 EDITION INCLUDING HIGH VELOCITY HURRICANE ZONE (HVHZ).

WOOD BUCKS BY OTHERS, MUST BE ANCHORED PROPERLY TO TRANSFER LOADS TO THE STRUCTURE.

ANCHORS SHALL BE AS LISTED, SPACED AS SHOWN ON DETAILS, ANCHORS EMBEDMENT TO BASE MATERIAL SHALL BE BEYOND WALL DRESSING OR STUCCO.

ANCHORING OR LOADING CONDITIONS NOT SHOWN IN THESE DETAILS ARE NOT PART OF THIS APPROVAL.

A LOAD DURATION INCREASE IS USED IN DESIGN OF ANCHORS INTO WOOD ONLY.

MATERIALS INCLUDING BUT NOT LIMITED TO STEEL/METAL SCREWS, THAT COME INTO CONTACT WITH OTHER DISSIMILAR MATERIALS SHALL MEET THE REQUIREMENTS OF 2007 FLORIDA BLDG. CODE SECTION 2003.8.4.

PRODUCT COMPLIES WITH REQUIREMENTS OF ANSI Z97.1.

LAMINATED INSULATING GLASS
LARGE MISSILE IMPACT

Engr: JAVAD AHMAD
CIVIL
FLA. PE # 70592
C.A.N. 3538

JUL 1 2 2010

Approved as complying with the Florida Building Code
Date Aug. 4, 2015
NOAF 09-0604.21
Miami Dade Product Control Division
By

AL-FAROOQ CORPORATION
ENGINEERS & PRODUCT DEVELOPMENT
1235 S.W. 87 AVE
MIAMI, FLORIDA 33174
TEL. (305) 264-8100 FAX. (305) 262-6978
COMP-ANL\W08-78RC

SERIES PH4400 ALUM SINGLE HUNG WINDOW (L.M.I.)

R.C. ALUMINUM INDUSTRIES INC.
2805 N.W. 75 TH AVE.
MIAMI, FL. 33122
TEL. (305) 592-1515 FAX. (305) 592-2184

revisions:			
no	date	by	description
A	07.09.10		NO CHANGE THIS SHEET

date: 09-10-08
scale: 1/2"=1'-0"
dr. by: HAMID
chk. by:

drawing no. W08-78

sheet 1 of 8

EQUAL LITES SINGLE HUNG WINDOWS			
DESIGN LOAD CAPACITY – PSF			
WINDOW DIMS.		LAM. INSUL. GLASS	
WIDTH	HEIGHT	EXT.(+)	INT.(–)
36"	48"	120.0	120.0
42"		120.0	120.0
48"		120.0	120.0
54"		114.3	114.3
60"		82.0	82.0
66"		60.9	60.9
72"		46.5	46.5
36"	54"	120.0	120.0
42"		120.0	120.0
48"		120.0	120.0
54"		103.9	103.9
60"		74.2	74.2
66"		54.9	54.9
36"	60"	120.0	120.0
42"		120.0	120.0
48"		120.0	120.0
54"		95.9	95.9
60"		68.2	68.2
36"	66"	120.0	120.0
42"		120.0	120.0
48"		120.0	120.0
54"		89.7	89.7
36"	72"	120.0	120.0
42"		120.0	120.0
48"		120.0	120.0
36"	78"	120.0	120.0
42"		120.0	120.0
48"		120.0	120.0
36"	84"	120.0	120.0
42"		120.0	120.0
36"	90"	120.0	120.0
42"		120.0	120.0
36"	96"	120.0	120.0
36"	102"	120.0	120.0

EQUAL LITES SINGLE HUNG/FIXED WINDOWS				
DESIGN LOAD CAPACITY – PSF				
WINDOW DIMS.			LAM. INSUL. GLASS	
WIDTH	S.H. HT.	HEIGHT	EXT.(+)	INT.(–)
36"	48"	72"	120.0	120.0
42"			120.0	120.0
48"			120.0	120.0
54"			114.3	114.3
60"			82.0	82.0
66"			60.9	60.9
72"			46.5	46.5
36"	54"	81"	120.0	120.0
42"			120.0	120.0
48"			120.0	120.0
54"			103.9	103.9
60"			74.2	74.2
66"			54.9	54.9
36"	60"	90"	120.0	120.0
42"			120.0	120.0
48"			120.0	120.0
54"			95.9	95.9
60"			68.2	68.2
36"	66"	99"	120.0	120.0
42"			120.0	120.0
48"			120.0	120.0
54"			89.7	89.7
36"	72"	108"	120.0	120.0
42"			120.0	120.0
48"			120.0	120.0
36"	78"	117"	120.0	120.0
42"			120.0	120.0
48"			120.0	120.0
36"	80"	120"	120.0	120.0
42"			120.0	120.0
48"			120.0	120.0

UNEQUAL LITES SINGLE HUNG WINDOWS UNEQUAL LITES SINGLE HUNG/FIXED WINDOWS									
DESIGN LOAD CAPACITY – PSF LAM. INSUL. GLASS									
WINDOW DIMS.		42-3/16" VENT HT.		36-3/16" VENT HT.		30-3/16" VENT HT.		24-3/16" VENT HT.	
WIDTH	HEIGHT	EXT.(+)	INT.(–)	EXT.(+)	INT.(–)	EXT.(+)	INT.(–)	EXT.(+)	INT.(–)
36"	84"	120.0	120.0	120.0	120.0	120.0	120.0	120.0	120.0
42"		120.0	120.0	120.0	120.0	120.0	120.0	120.0	120.0
48"		120.0	120.0	120.0	120.0	120.0	120.0	120.0	120.0
54"		–	–	80.7	80.7	85.5	85.5	92.6	92.6
60"		–	–	–	–	58.3	58.3	62.8	62.8
66"		–	–	–	–	41.6	41.6	–	–
36"	90"	120.0	120.0	120.0	120.0	120.0	120.0	120.0	120.0
42"		120.0	120.0	120.0	120.0	120.0	120.0	120.0	120.0
48"		120.0	120.0	120.0	120.0	120.0	120.0	120.0	120.0
54"		–	–	80.4	80.4	85.5	85.5	92.6	92.6
60"		–	–	–	–	58.1	58.1	–	–
36"	96"	120.0	120.0	120.0	120.0	120.0	120.0	120.0	120.0
42"		120.0	120.0	120.0	120.0	120.0	120.0	120.0	120.0
48"		120.0	120.0	120.0	120.0	120.0	120.0	120.0	120.0
54"		–	–	80.4	80.4	85.5	85.5	–	–
36"	102"	120.0	120.0	120.0	120.0	120.0	120.0	120.0	120.0
42"		120.0	120.0	120.0	120.0	120.0	120.0	120.0	120.0
48"		120.0	120.0	120.0	120.0	120.0	120.0	120.0	120.0
54"		–	–	80.4	80.4	–	–	–	–
36"	108"	120.0	120.0	120.0	120.0	120.0	120.0	120.0	120.0
42"		120.0	120.0	120.0	120.0	120.0	120.0	120.0	120.0
48"		120.0	120.0	120.0	120.0	120.0	120.0	–	–
36"	114"	120.0	120.0	120.0	120.0	120.0	120.0	120.0	120.0
42"		120.0	120.0	120.0	120.0	120.0	120.0	–	–
48"		120.0	120.0	120.0	120.0	–	–	–	–
36"	120"	120.0	120.0	120.0	120.0	120.0	120.0	120.0	120.0
42"		120.0	120.0	120.0	120.0	–	–	–	–
48"		120.0	120.0	–	–	–	–	–	–

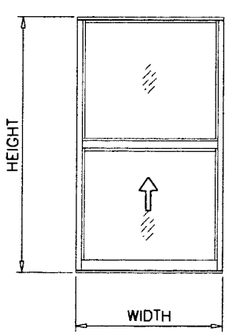

EQUAL LITES
SINGLE HUNG WINDOWS

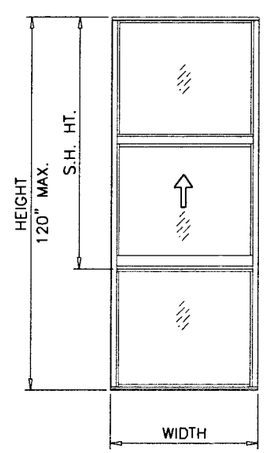

EQUAL LITES
SINGLE HUNG/FIXED WINDOWS

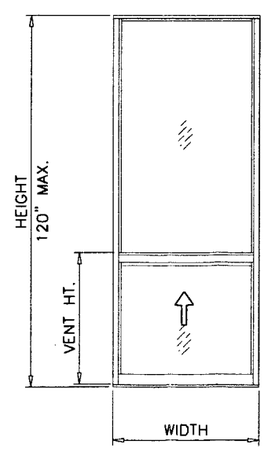

UNEQUAL LITES (ORIEL)
SINGLE HUNG WINDOWS

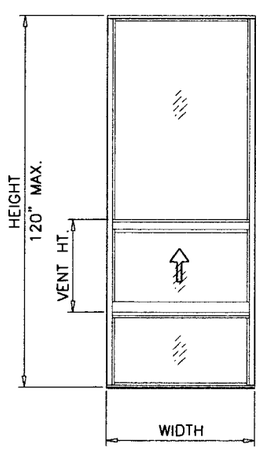

UNEQUAL LITES (ORIEL)
SINGLE HUNG/FIXED WINDOWS

NOTE:
GLASS CAPACITIES ON THIS SHEET ARE BASED ON ASTM E1300-04 (3 SEC. GUSTS) AND FLORIDA BUILDING COMMISSION DECLARATORY STATEMENT DCA05-DEC-219

Engr: JAVAD AHMAD
CIVIL
FLA. PE # 70592
C.A.N. 3538

JUL 1 2 2010

Approved as complying with the Florida Building Code
Date: AUG. 4, 2015
Notice: 09-0604.21
Permit Application Control
By: Manuel Perez

AL-FAROOQ CORPORATION
ENGINEERS & PRODUCT DEVELOPMENT
1235 S.W. 87 AVE
MIAMI, FLORIDA 33174
TEL. (305) 264-8100 FAX. (305) 262-6978
COMP-ANL\W08-78RC

SERIES PH4400 ALUM SINGLE HUNG WINDOW (L.M.I.)

R.C. ALUMINUM INDUSTRIES INC.
2805 N.W. 75 TH AVE.
MIAMI, FL. 33122
TEL. (305) 592-1515 FAX. (305) 592-2184

revisions:

no	date	by	description
A	07.09.10		NO CHANGE THIS SHEET

date: 09-10-08
scale: –
dr. by: HAMID
chk. by:

drawing no.
W08-78

MULLION CAPACITY CHART - PSF			
WINDOW DIMS.		STD. MULLION	
WIDTH (W)	MULL SPAN	EXT.(+)	INT.(-)
37-1/2"	78"	120.0	120.0
43-1/2"		120.0	120.0
49-1/2"		120.0	120.0
55-1/2"		120.0	120.0
61-1/2"		120.0	120.0
67-1/2"		120.0	120.0
73-1/2"		120.0	120.0
37-1/2"	84"	120.0	120.0
43-1/2"		120.0	120.0
49-1/2"		120.0	120.0
55-1/2"		120.0	120.0
61-1/2"		120.0	120.0
67-1/2"		120.0	120.0
37-1/2"	90"	120.0	120.0
43-1/2"		120.0	120.0
49-1/2"		120.0	120.0
55-1/2"		120.0	120.0
61-1/2"		120.0	120.0
37-1/2"	96"	120.0	120.0
43-1/2"		120.0	120.0
49-1/2"		120.0	120.0
55-1/2"		120.0	120.0
61-1/2"		120.0	120.0
37-1/2"	102"	120.0	120.0
43-1/2"		120.0	120.0
49-1/2"		120.0	120.0
55-1/2"		120.0	120.0
37-1/2"	108"	120.0	120.0
43-1/2"		120.0	120.0
49-1/2"		120.0	120.0
55-1/2"		118.4	118.4
37-1/2"	114"	120.0	120.0
43-1/2"		120.0	120.0
49-1/2"		120.0	120.0
37-1/2"	120"	120.0	120.0
43-1/2"		120.0	120.0
49-1/2"		120.0	120.0

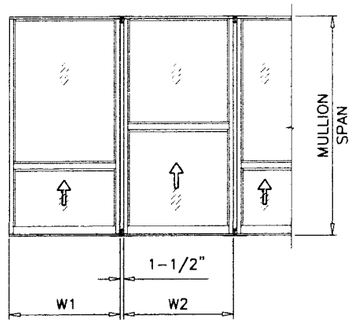

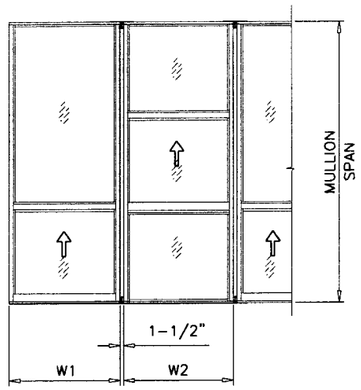

$$\text{WIDTH (W)} = \frac{W1 + W2}{2} + 1\text{-}1/2"$$

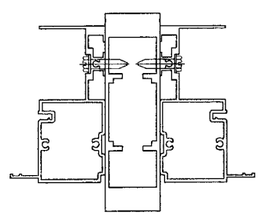

STD. MULLION

REFER TO SHEET 2 TO OBTAIN CAPACITY OF EQUAL LITE AND UNEQUAL LITES SINGLE HUNG WINDOWS AND SINGLE HUNG/FIXED WINDOWS

REFER TO CHARTS ABOVE TO OBTAIN MULLION CAPACITY.

USE LOWEST VALUES OF OPTIONS CONSULTED.

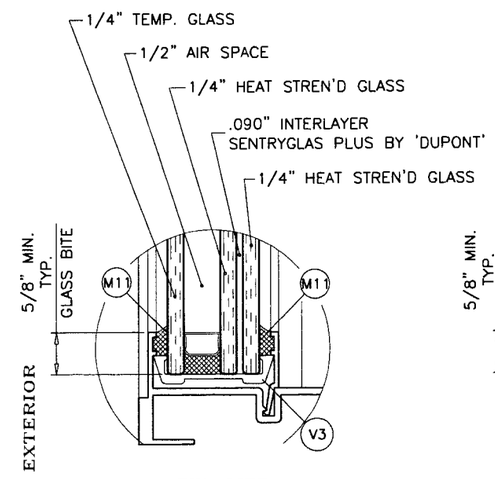

FIX. LITE

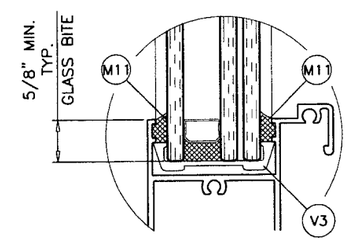

VENT

GLZING DETAIL

1-1/4" OVERALL LAM. INSUL. GLASS

Engr: JAVAD AHMAD
CIVIL
FLA. PE # 70592
C.A.N. 3538

JUL 1 2 2010

Approved as complying with the Florida Building Code
Date AUG. 4, 2015
NOA# 09-0604.21
Miami-Dade Product Control
By

AL-FAROOQ CORPORATION
ENGINEERS & PRODUCT DEVELOPMENT
1235 S.W. 87 AVE
MIAMI, FLORIDA 33174
TEL. (305) 264-8100 FAX. (305) 262-6978

COMP-ANL\W08-78RC

SERIES PH4400 ALUM SINGLE HUNG WINDOW (L.M.I.)

R.C. ALUMINUM INDUSTRIES INC.
2805 N.W. 75 TH AVE.
MIAMI, FL. 33122
TEL. (305) 592-1515 FAX. (305) 592-2184

revisions:

no	date	by	description
A	07.09.10		REV. PER BCCO COMMENTS

date: 09-10-08
scale: -
dr. by: HAMID
chk. by:

drawing no.
W08-78

sheet 3 of 8

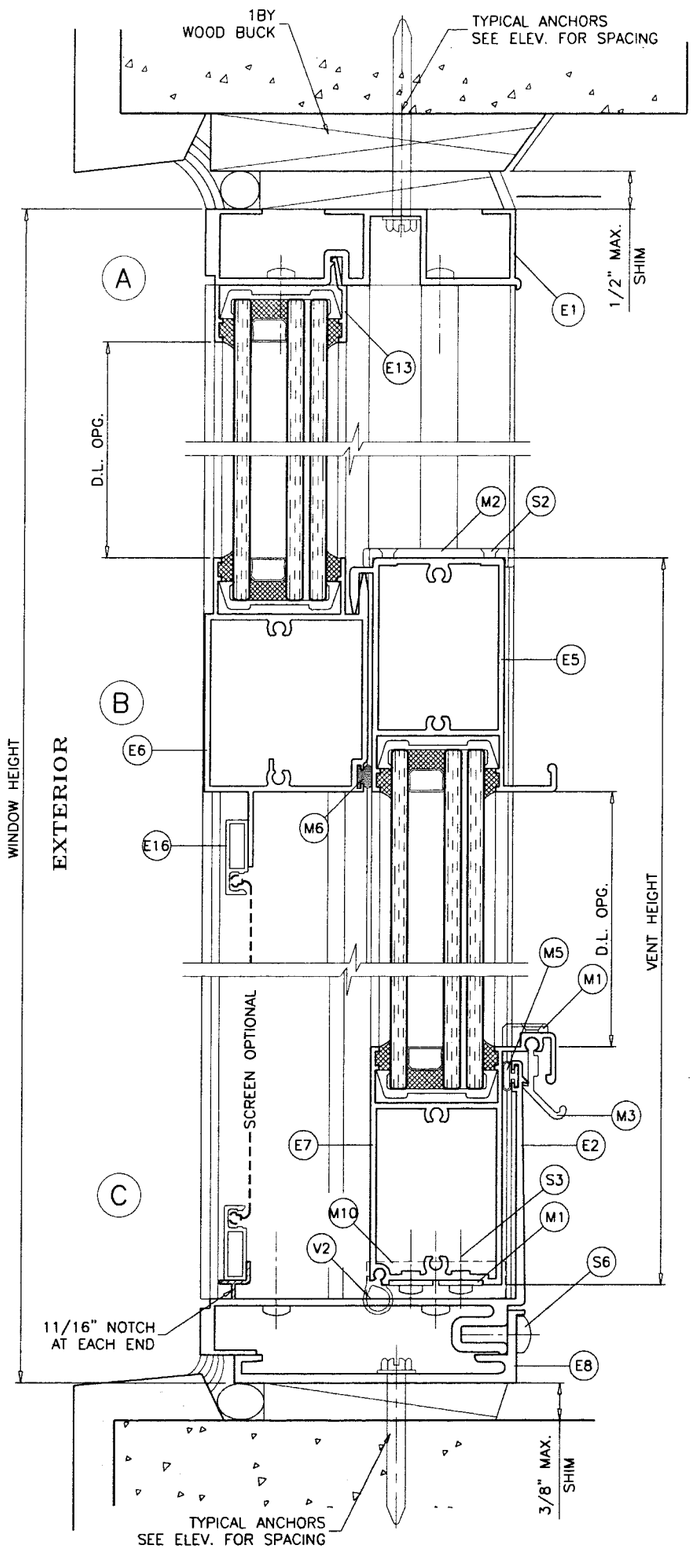

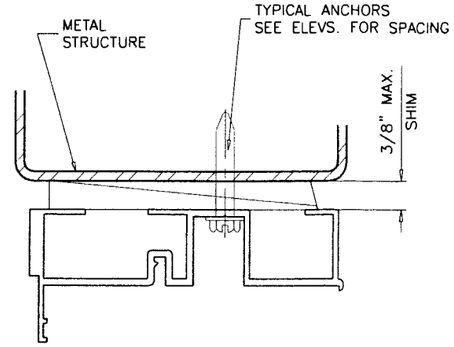

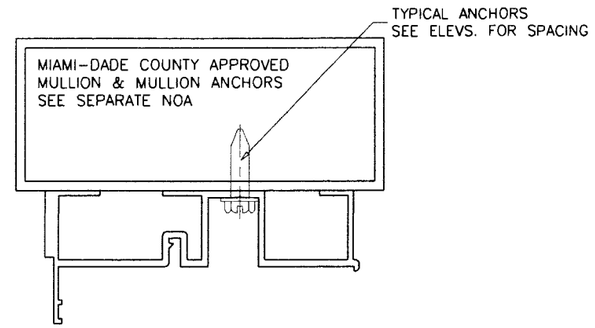

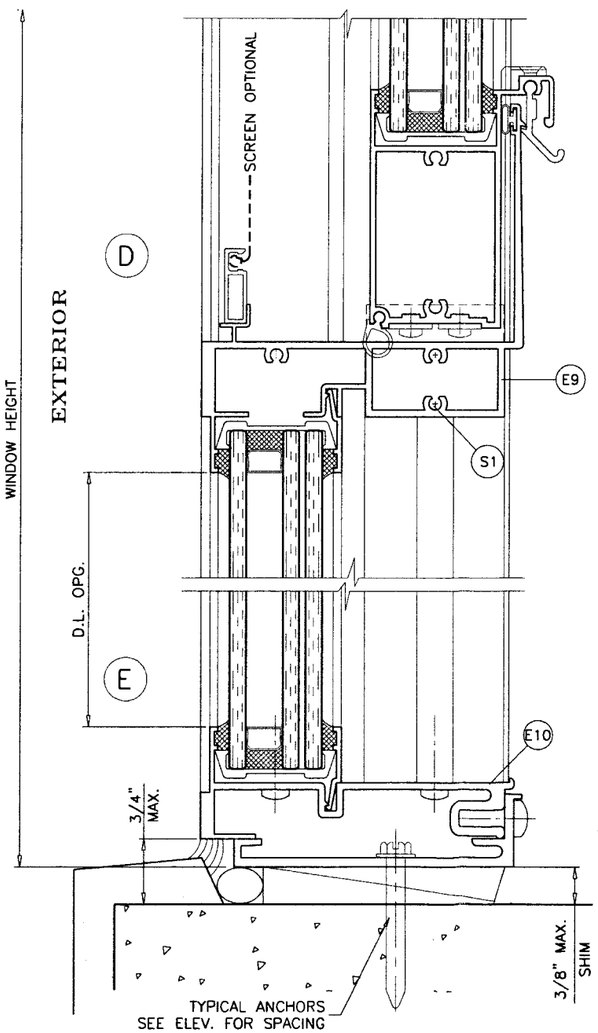

WOOD BUCKS AND METAL STRUCTURE NOT BY RC ALUMINUM MUST SUSTAIN LOADS IMPOSED BY GLAZING SYSTEM AND TRANSFER THEM TO THE BUILDING STRUCTURE.

TYPICAL ANCHORS: SEE ELEV. FOR SPACING

TYPE 'A'– 1/4" HILTI KWIK-CON II (Fu=163 KSI, Fy=157 KSI)
INTO 2BY WOOD BUCKS OR WOOD STRUCTURES
1-1/2" MIN. PENETRATION INTO WOOD
THRU 1BY BUCKS INTO CONC. OR MASONRY
1-1/4" MIN. EMBED INTO CONC. OR MASONRY

TYPE 'B'– 1/4" HILTI KWIK-CON II (Fu=163 KSI, Fy=157 KSI)
DIRECTLY INTO CONCRETE
1-1/4" MIN. EMBED INTO CONCRETE

TYPE 'C'– 1/4" HILTI KWIK-FLEX SELF DRILLING SCREWS (Fu=92 KSI, Fy=120 KSI)
INTO METAL STRUCTURES
STEEL : 12 GA. MIN. (Fy = 36 KSI MIN.)
ALUMINUM : 1/8" THK. MIN. (6063-T5 MIN.)
(STEEL IN CONTACT WITH ALUMINUM TO BE PLATED OR PAINTED)

TYPE 'C'– #14 SMS OR SELF DRILLING SCREWS
INTO MIAMI-DADE COUNTY APPROVED MULLIONS
(NO SHIM SPACE)

ANCHOR EDGE DISTANCES
INTO WOOD STRUCTURE = 1" MIN.
INTO CONCRETE AND MASONRY = 3" MIN.
INTO METAL STRUCTURE = 1" MIN.

CONCRETE f'c = 3000 PSI MIN.
MASONRY f'm = 1500 PSI MIN.

SEALANT:

ALL JOINTS AND FRAME CONNECTIONS SEALED WITH DOW CORNING 795 SEALANT.

Engr: JAVAD AHMAD
CIVIL
FLA. PE # 70592
C.A.N. 3538
JUL 1 2 2010

Approved as complying with the Florida Building Code
Date AUG. 4 2015
NOA# 09-0604.21
Miami-Dade Product Control Division
By

AL-FAROOQ CORPORATION
ENGINEERS & PRODUCT DEVELOPMENT
1235 S.W. 87 AVE
MIAMI, FLORIDA 33174
TEL. (305) 264-8100 FAX. (305) 262-6978
COMP-ANL\W08-78RC

SERIES PH4400 ALUM SINGLE HUNG WINDOW (L.M.I.)

R.C. ALUMINUM INDUSTRIES INC.
2805 N.W. 75 TH AVE.
MIAMI, FL. 33122
TEL. (305) 592-1515 FAX. (305) 592-2184

revisions:

no	date	by	description
A	07.09.10		REV. PER BCCO COMMENTS

date: 09-10-08
scale: 1/2" = 1"
dr. by: HAMID
chk. by:

drawing no.
W08-78

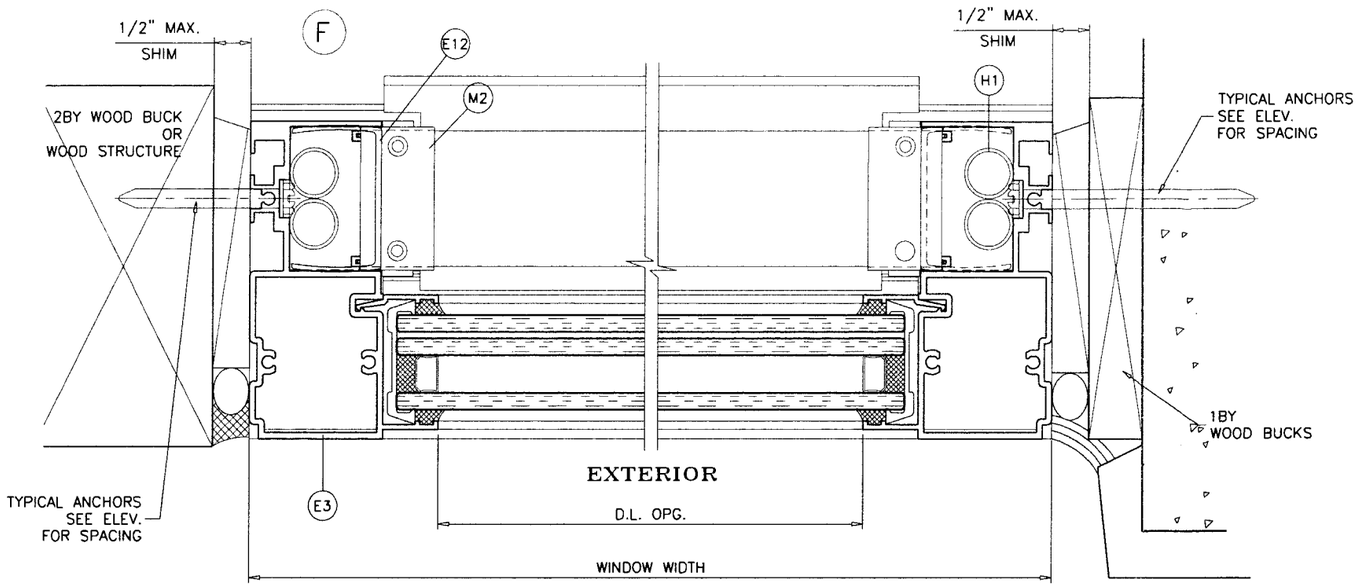

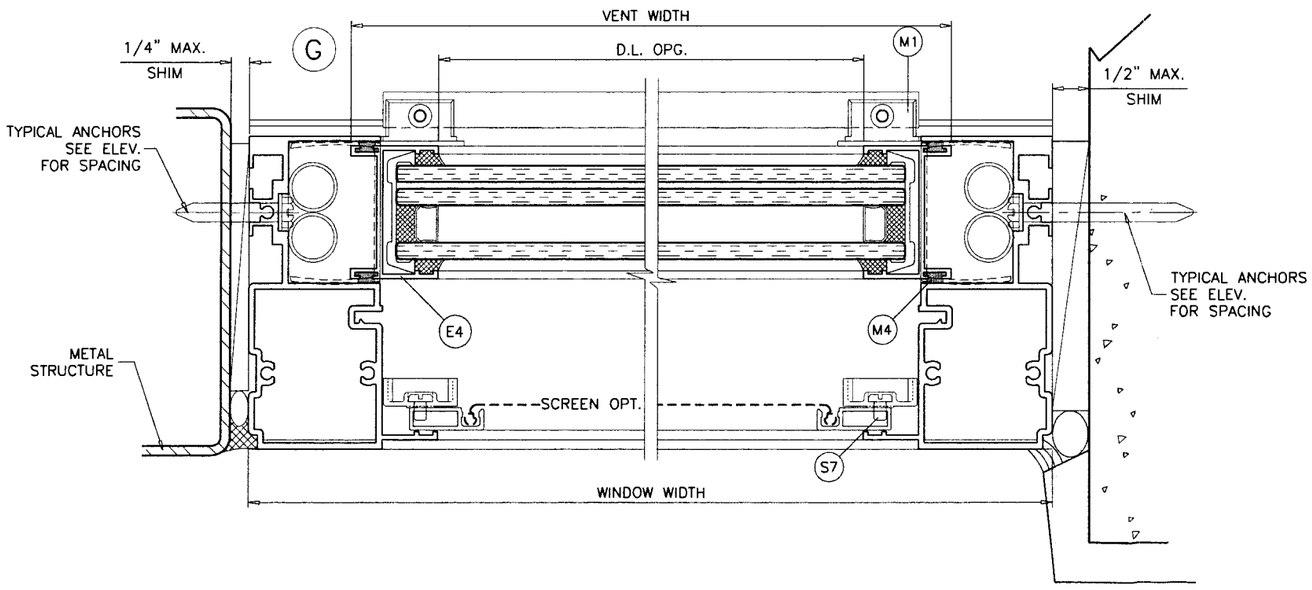

Engr: JAVAD AHMAD
CIVIL
FLA. PE # 70592
C.A.N. 3538

JUL 1 2 2010

Approved as complying with the Florida Building Code
Date AUG. 4, 2015
NOAA 09-0604.21
Miami Dade Product Control
Division
By Manuel Perez

AL-FAROOQ CORPORATION
ENGINEERS & PRODUCT DEVELOPMENT
1235 S.W. 87 AVE
MIAMI, FLORIDA 33174
TEL. (305) 264-8100 FAX. (305) 262-6978
COMP-ANL\W08-78RC

SERIES PH4400 ALUM SINGLE HUNG WINDOW (L.M.I.)

R.C. ALUMINUM INDUSTRIES INC.
2805 N.W. 75 TH AVE.
MIAMI, FL. 33122
TEL. (305) 592-1515 FAX. (305) 592-2184

revisions:

no	date	by	description
A	07.09.10		NO CHANGE THIS SHEET

date: 09-10-08
scale: 1/2" = 1"
dr. by: HAMID
chk. by:

drawing no.
W08-78

sheet 5 of 8

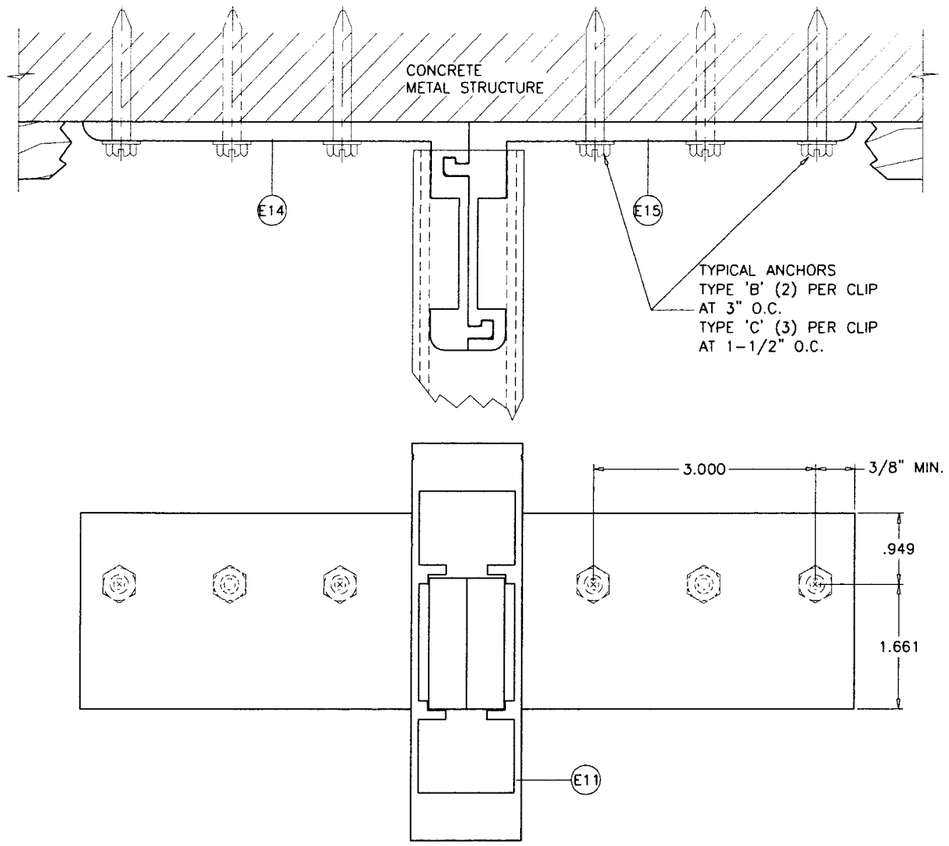

MULLION CONNECTION AT HEAD & SILL

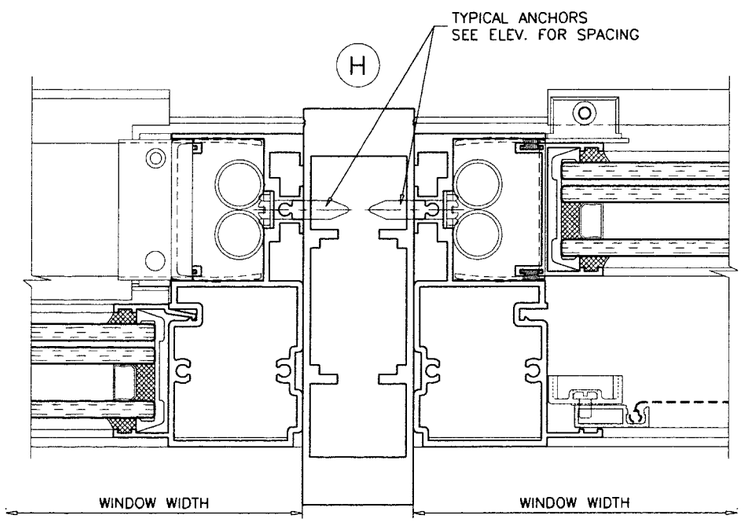

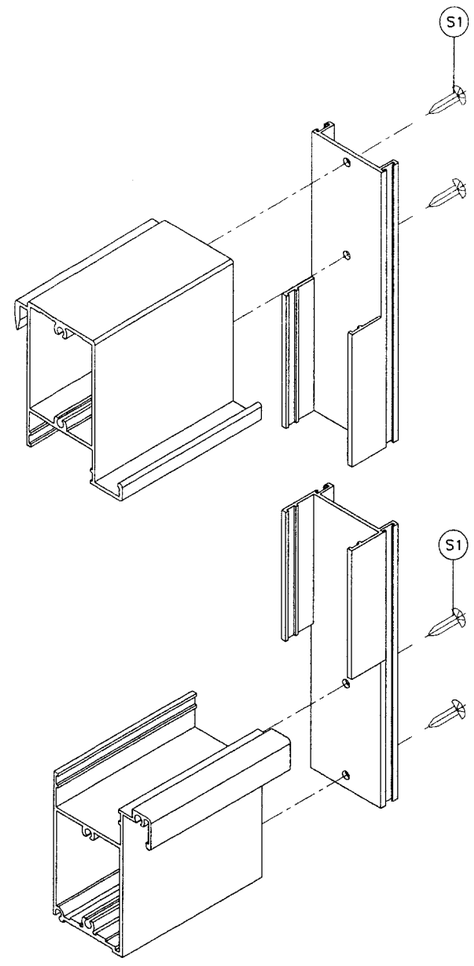

VENT CORNER DETAIL

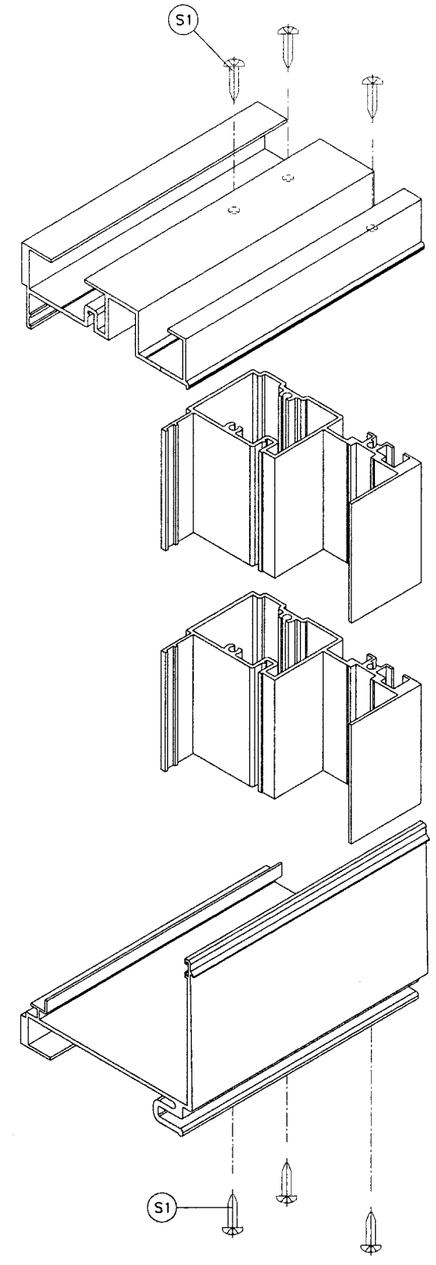

FRAME CORNERS DETAIL

SEE CHARTS ON SHEET 3 FOR MULLION LOAD CAPACITY

Engr: JAVAD AHMAD
CIVIL
FLA. PE # 70592
C.A.N. 3538

JUL 1 2 2010

Approved as complying with the Florida Building Code
Date AUG. 4 2015
NOA# 09-0604.21
Miami Dade Product Control Division
By Manuel Perez

AL-FAROOQ CORPORATION
ENGINEERS & PRODUCT DEVELOPMENT
1235 S.W. 87 AVE
MIAMI, FLORIDA 33174
TEL. (305) 264-8100 FAX. (305) 262-6978

COMP-ANL\W08-78RC

SERIES PH4400 ALUM SINGLE HUNG WINDOW (L.M.I.)

R.C. ALUMINUM INDUSTRIES INC.
2805 N.W. 75 TH AVE.
MIAMI, FL. 33122
TEL. (305) 592-1515 FAX. (305) 592-2184

revisions:

no	date	by	description
A	07.09.10		REV. PER BCCO COMMENTS

date: 09-10-08
scale: 1/2" = 1"
dr. by: HAMID
chk. by:

drawing no.
W08-78

sheet 6 of 8

ITEM #	PART #	REQD.	DESCRIPTION	MATERIAL	MANF./SUPPLIER/REMARKS
E1	PH4400-001	1	FRAME HEAD	6063-T6	-
E2	PH4400-002	1	FRAME SILL	6063-T6	-
E3	PH4400-003	2	FRAME JAMB	6005-T5	-
E4	PH4400-004	2	VENT JAMB	6063-T6	-
E5	PH4400-005	1	VENT TOP	6005-T5	-
E6	PH4400-006	1	MEETING RAIL	6005-T5	-
E7	PH4400-007	1	VENT BOTTOM	6063-T6	-
E8	PH4400-008	1	SILL ANCHOR CLIP	6063-T6	-
E9	PH4400-009	1	MEETING SILL	6063-T6	-
E10	PH4400-010	1	FRAME SILL 3P	6063-T6	-
E11	PH4400-011A	AS REQD.	MULLIOM	6063-T6	-
E12	PH4400-012	1	VENT STOP	6063-T6	AT TOP OF FRAME
E13	500Y-007	AS REQD.	GLAZING BEAD	6063-T6	-
E14	500Y-024	AS REQD.	FEMALE ANCHOR CLIP	-	TOP & BOTTOM OF MULLION
E15	500Y-025	AS REQD.	MALE ANCHOR CLIP	-	TOP & BOTTOM OF MULLION
E16	500Y-026	AS REQD.	EXTRUDED FRAME (OPTIONAL)	-	-
E17	500Y-030	AS REQD.	EXTRUDED SCREEN CORNER (OPTIONAL)	-	-
V2	V-071	AS REQD.	VENT BOTTOM WEATHERSEAL	VINYL	DUROMETER ±65
V3	V-073	AS REQD.	MARINE GLAZING GASKET	EPDM	DUROMETER ±75
S1		AS REQD.	#10 X 1" LG. PH. SMS POINT"B" ST/ST (ASSEMBLY SCREW)	-	-
S2		2/ GUIDE	#8 X 3/8" LG. FH. SMS TYPE "B" ST/ST (@ P-037 & P-013)	-	-
S3		-	#8 X 1/2" LG. P.H. SMS. ST/ST (@ BALANCE BRACKET)	-	AT BALANCE CLIP
S5		-	#8 X 1" LG. FH. SMS ST/ST (@ BALANCE)	-	AT TOP OF BALANCE
S6		AS REQD.	#14 X 3/4" LG. PH. SMS TYPE "B" ST/ST AT SILL	-	AT 4" FROM ENDS & 20" O.C. MAX.
S7		-	#8-32 X 1/4" LG. PHL. MACHINE SCREW ST/ST	-	-
H1		2/ WDW.	ULTRALIFT BALANCE	-	-
H2		2/ WDW.	ULTRALIFT NOT TILT BRACKET	-	-
M1	P-040	2/ VENT	VENT BOTTOM GUIDE	NYLON	BOTTOM OF SASH VENT
M2	P-037	2/ VENT	VENT TOP GUIDE	NYLON	TOP OF SASH VENT
M3	P-035	2/ WDW.	FINGER LOCK	ALUMINUM	AT 6" FROM EACH END
M4	U56	-	Q225T270 BLACK @ VENT JAMBS	FOAM	-
M5	V-086	-	OPERABLE VENT GASKET	VINYL	-
M6	U52	-	Q250T270 WHITE @ MEETING RAIL	-	-
M7	P-028	-	SCREEN RETAINER CLIP-90° ROTATION	-	-
M10		-	1 1/4" X 1 7/8" X 1/2" HIGH BAFFLE 30 PPI RETIC. W/ADHES AT BOTTOM	-	-
M11	DC-995	AS REQD.	GLAZING COMPOUND	SILICONE	DOW CORNING

Engr: JAVAD AHMAD
CIVIL
FLA. PE # 70592
C.A.N. 3538

JUL 1 2 2010

Approved as complying with the Florida Building Code
Date AUG. 4, 2015
NOA# 09-0604.21
Miami Dade Product Control Division
By Manuel Perez

AL-FAROOQ CORPORATION
ENGINEERS & PRODUCT DEVELOPMENT
1235 S.W. 87 AVE
MIAMI, FLORIDA 33174
TEL. (305) 264-8100 FAX. (305) 262-6978
COMP-ANL\W08-78RC

SERIES PH4400 ALUM SINGLE HUNG WINDOW (L.M.I.)

R.C. ALUMINUM INDUSTRIES INC.
2805 N.W. 75 TH AVE.
MIAMI, FL. 33122
TEL. (305) 592-1515 FAX. (305) 592-2184

revisions:

no	date	by	description
A	07.09.10		REV. PER BCCO COMMENTS

date: 09-10-08
scale: 1/2" = 1"
dr. by: HAMID
chk. by:

drawing no.
W08-78

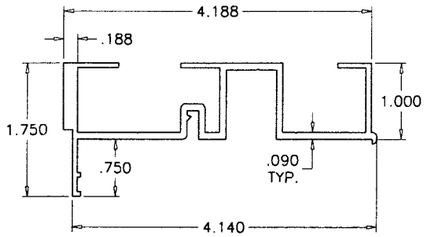

E1 FRAME HEAD

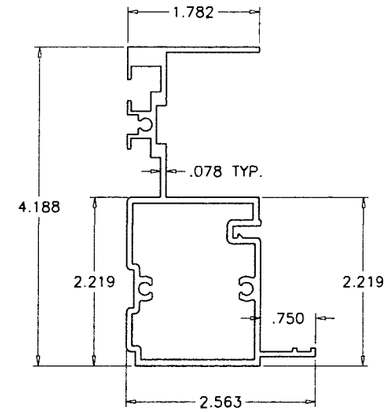

E3 FRAME JAMB

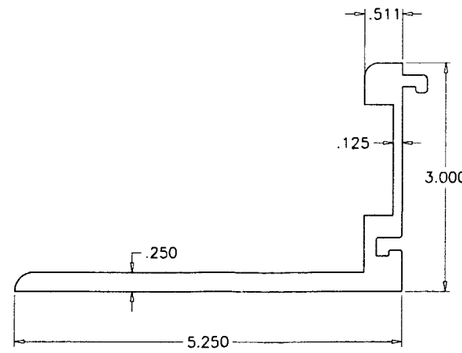

E14 FEMALE ANCHOR CLIP

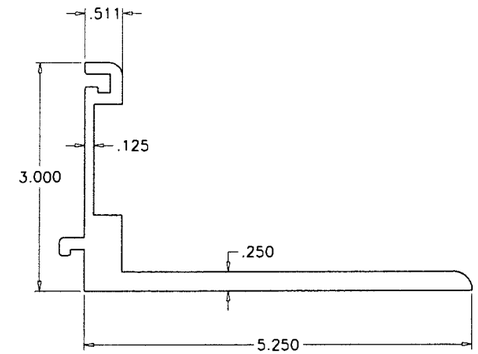

E15 MALE ANCHOR CLIP

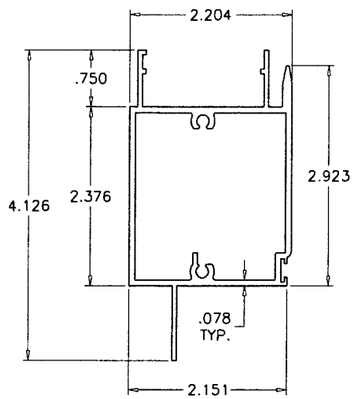

E6 MEETING RAIL

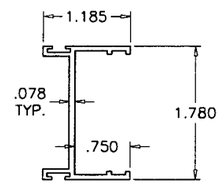

E4 VENT SIDE RAIL

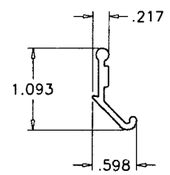

M3 VENT LATCH

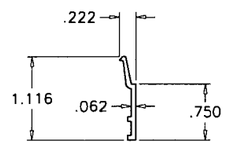

E13 GLAZING BEAD

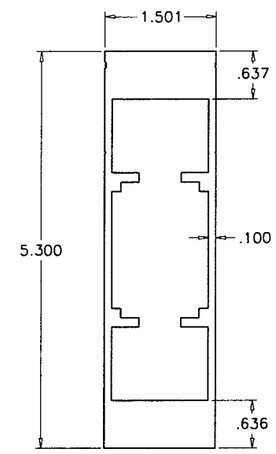

E11 STD. MULLION

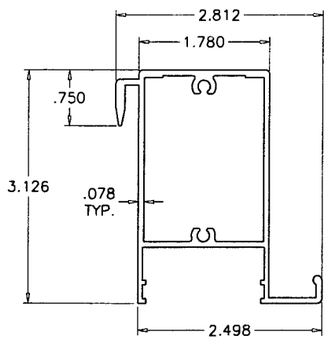

E5 VENT TOP RAIL

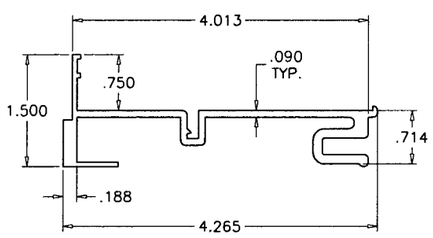

E10 FRAME SILL FIXED WDW.

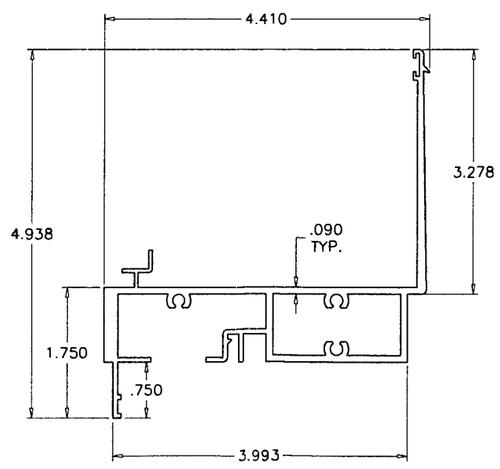

E9 SILL MTG. RAIL W/ FIXED BOTTOM

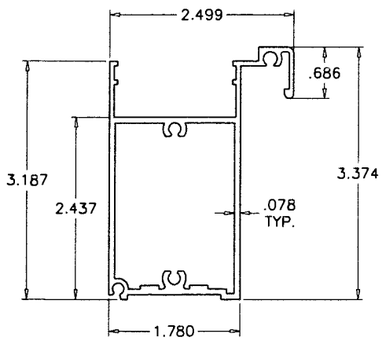

E7 VENT BOTTOM RAIL

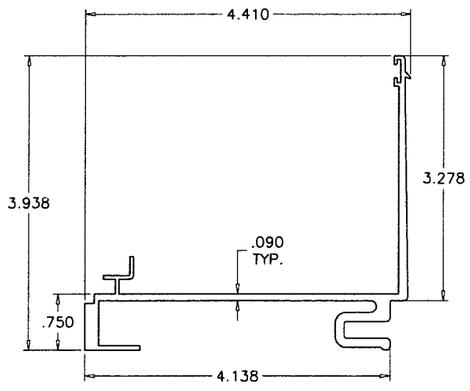

E2 FRAME SILL

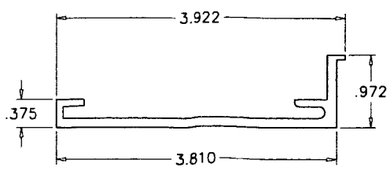

E8 SILL ANCHOR CLIP

Engr: JAVAD AHMAD
CIVIL
FLA. PE # 70592
C.A.N. 3538

JUL 1 2 2010

Approved as complying with the Florida Building Code
Date AUG. 4, 2015
NOA# 09-0604.21
Miami-Dade Product Control Division
By Manuel Perez

AL-FAROOQ CORPORATION
ENGINEERS & PRODUCT DEVELOPMENT
1235 S.W. 87 AVE
MIAMI, FLORIDA 33174
TEL. (305) 264-8100 FAX. (305) 262-6978

COMP-ANL\W08-78RC

SERIES PH4400 ALUM SINGLE HUNG WINDOW (L.M.I.)

R.C. ALUMINUM INDUSTRIES INC.
2805 N.W. 75 TH AVE.
MIAMI, FL. 33122
TEL. (305) 592-1515 FAX. (305) 592-2184

revisions:

no	date	by	description
A	07.09.10		NO CHANGE THIS SHEET

date: 09-10-08
scale: 1/2" = 1"
dr. by: HAMID
chk. by:

drawing no. W08-78

sheet 8 of 8