MIAMI-DADE

BUILDING CODE COMPLIANCE OFFICE (BCCO)
PRODUCT CONTROL DIVISION

MIAMI-DADE COUNTY, FLORIDA
METRO-DADE FLAGLER BUILDING
140 WEST FLAGLER STREET, SUITE 1603
MIAMI, FLORIDA 33130-1563
(305) 375-2901 FAX (305) 375-2908

NOTICE OF ACCEPTANCE (NOA)

BEMO USA Corporation
3062 N. Maple Street
Mesa, AZ 85215

SCOPE:

This NOA is being issued under the applicable rules and regulations governing the use of construction materials. The documentation submitted has been reviewed by Miami-Dade County Product Control Division and accepted by the Board of Rules and Appeals (BORA) to be used in Miami Dade County and other areas where allowed by the Authority Having Jurisdiction (AHJ).

This NOA shall not be valid after the expiration date stated below. The Miami-Dade County Product Control Division (In Miami Dade County) and/or the AHJ (in areas other than Miami Dade County) reserve the right to have this product or material tested for quality assurance purposes. If this product or material fails to perform in the accepted manner, the manufacturer will incur the expense of such testing and the AHJ may immediately revoke, modify, or suspend the use of such product or material within their jurisdiction. BORA reserves the right to revoke this acceptance, if it is determined by Miami-Dade County Product Control Division that this product or material fails to meet the requirements of the applicable building code.

This product is approved as described herein, and has been designed to comply with the Florida Building Code including the High Velocity Hurricane Zone of the Florida Building Code.

DESCRIPTION: BEMO 305 Aluminum Standing Seam Roof Panel

LABELING: Each unit shall bear a permanent label with the manufacturer's name or logo, city, state and following statement: "Miami-Dade County Product Control Approved", unless otherwise noted herein.

RENEWAL of this NOA shall be considered after a renewal application has been filed and there has been no change in the applicable building code negatively affecting the performance of this product.

TERMINATION of this NOA will occur after the expiration date or if there has been a revision or change in the materials, use, and/or manufacture of the product or process. Misuse of this NOA as an endorsement of any product, for sales, advertising or any other purposes shall automatically terminate this NOA. Failure to comply with any section of this NOA shall be cause for termination and removal of NOA.

ADVERTISEMENT: The NOA number preceded by the words Miami-Dade County, Florida, and followed by the expiration date may be displayed in advertising literature. If any portion of the NOA is displayed, then it shall be done in its entirety.

INSPECTION: A copy of this entire NOA shall be provided to the user by the manufacturer or its distributors and shall be available for inspection at the job site at the request of the Building Official.

This revises NOA # 07-0619.05 and consists of pages 1 through 6.
The submitted documentation was reviewed by Alex Tigera.

MIAMI-DADE COUNTY APPROVED

ROOFING SYSTEM APPROVAL:

Category:	Roofing
Sub-Category:	Metal, Panels(Non-Structural)
Material:	Aluminum
Deck Type:	Steel
Maximum Design Pressure:	**-219.6 psf**
Fire Classification:	See General Limitation #1

TRADE NAMES OF PRODUCTS MANUFACTURED OR LABELED BY APPLICANT:

Product	Dimensions	Test Specifications	Product Description
BEMO 305 Aluminum Standing Seam Roof Panel	Length: varies Width: 12" Height: 2.5" Thickness: 0.040"	TAS 125	Aluminum, preformed, standing seam roof panels.
Sliding Hook Clip	l = 5" w = 1-7/8" h = 3-1/8"	TAS 110	18 ga. stainless steel preformed, two piece sliding clips with four preformed holes.

TRADE NAMES OF PRODUCTS MANUFACTURED BY OTHERS:

Product	Dimensions	Product Description	Manufacturer
Fasteners	#12	Corrosion resistant Screws for fastening of metal deck.	Generic
Fasteners	#14	Corrosion resistant Screws for fastening of clip.	Generic

EVIDENCE SUBMITTED

Test Agency	Test Identifier	Test Name/Report	Date
Farabaugh Engineering and Testing, Inc.	T179-09	TAS 125	05/23/09
PRI Asphalt Technologies, Inc.	BEMO-001-02-01	ASTM B 117	06/30/02
PRI Asphalt Technologies, Inc.	BEMO-002-02-01	TAS 100	05/21/02
PRI Asphalt Technologies, Inc.	BEMO-003-02-01	TAS 114 (G)	05/20/02
Architectural Testing	01-41542.01	TAS-125	06/13/02

APPROVED ASSEMBLIES

SYSTEM A: Aluminum Standing Seam Roof Panel

Deck Type: 18-22 ga. Steel

Deck Description: ASTM A 611 Grade C Type B Steel Deck 22ga for field conditions.
ASTM A 611 Grade C Type B Steel Deck 20ga for perimeter and corner conditions

Slope Range: 2":12" or greater

Maximum Uplift Pressure: See **Table A** below (See General Limitation #2)

Deck Attachment: Steel deck shall be secured 6" 0.c. to structural supports spaced a maximum of 5ft. o.c. with two (2) #12 x 1-1/4" HWH TEK 4/5 fasteners at bottom of each flute (6" o.c.) Deck sidelap shall be secured 30" o.c. with #14 x 7/8" HWH TEK fasteners.

Insulation: Between 3/4" – 4" thick of an Atlas AC-Foam-II polyiso insulation with current NOA with a minimum 25psi compressive strength fastened with approved fasteners and plates. Fastening density shall be in compliance with applicable Building Code and Roofing Application Standard RAS 117.

Fire Barrier Board: Any approved fire barrier having a current NOA. Or for class A or B fire rating, install minimum ¼" thick Georgia Pacific "Dens Deck" (with current NOA) or minimum 4mm thick of Tritex, RockRoof (with current NOA) or $^5/_8$" water resistant type X gypsum sheathing with treated core and facer.

Underlayment: Minimum underlayment shall be an ASTM D 226 Type II installed with a minimum 4" side-lap and 6" end-laps. Underlayment shall be fastened with corrosion resistant tin-caps and 12 gauge 1 ¼" annular ring-shank nails, spaced 6" o.c. at all laps and two staggered rows 12" o.c. in the field of the roll. Or, any approved underlayment having a current NOA.

Valleys: Valley construction shall be in compliance with Roofing Application Standard RAS 133 and with Southeastern Metal Manufacturing Company's current published installation instructions.

Metal Panels and Accessories:

Install the "BEMO Aluminum Standing Seam Panels" and accessories in compliance with BEMO USA's current, published installation instructions and details. Flashing, penetrations, valley construction and other details shall be constructed in compliance with the minimum requirements provided in Roofing Application Standards RAS 133.

Panels shall be installed with approved sliding hook clips (5" long x 1-7/8" wide x 3-1/8" tall), attached to the substrate with two (2) #14 corrosion resistant fasteners of sufficient length to penetrate through the bottom flange of the steel deck a minimum of ¾". Clip fastening shall not exceed the spacing listed below in **Table A**, each row shall be staggered; see drawings herein. Standing seams shall be hand crimped and followed by a roll-form machine for the finish crimp.

TABLE A
MAXIMUM DESIGN PRESSURES

Roof Areas	**Field**	**Perimeter and Corner[1]**
Maximum Design Pressures	**–157.25 psf**	**–219.6 psf**
Maximum Clip Spacing	**24" o.c.**	**12" o.c.**
Minimum Gage Type B-Deck	**22 ga.**	**20 ga.**

1. Extrapolation shall not be allowed

GENERAL LIMITATIONS

1 Fire classification is not part of this acceptance; refer to a current Approved Roofing Materials Directory for fire ratings of this product.

2 The maximum designed pressure listed herein shall be applicable to all roof pressure zones (i.e. field, perimeters, and corners). Neither rational analysis, nor extrapolation shall be permitted for enhanced fastening at enhanced pressure zones (i.e. perimeters, extended corners and corners).

3. Panels may be rolls formed in continuous lengths from eave to ridge. Maximum lengths shall be as described in Roofing Application Standard RAS 133

4. All panels shall be permanently labeled with the manufacturer's name and/or logo, and the following statement: "Miami-Dade County Product Control Approved" **or** with the Miami-Dade County Product Control Seal as seen below. All clips shall be permanently labeled with the manufacturer's name and/or logo, and/or model.

MIAMI-DADE COUNTY
APPROVED

5. All insulation and barrier board shall have preliminary attachment, prior to the installation of the roofing assembly at a minimum application rate of two fasteners per board for insulation boards having no dimension greater than 4 ft., and four fasteners for any insulation board having no dimension greater than 8 ft.

DRAWINGS

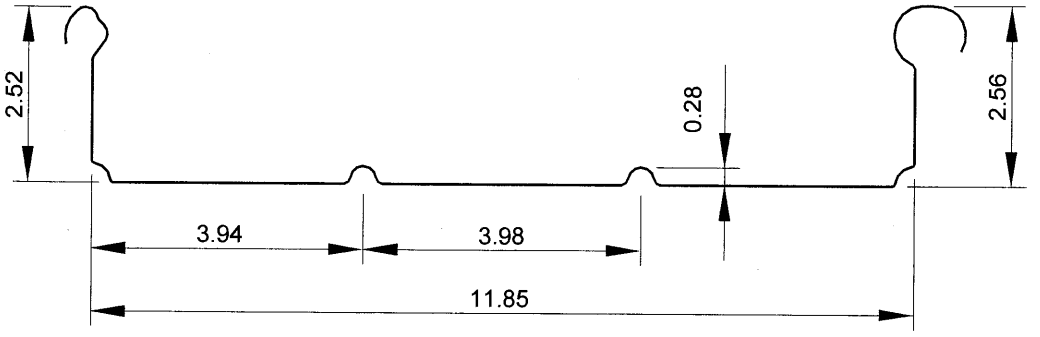

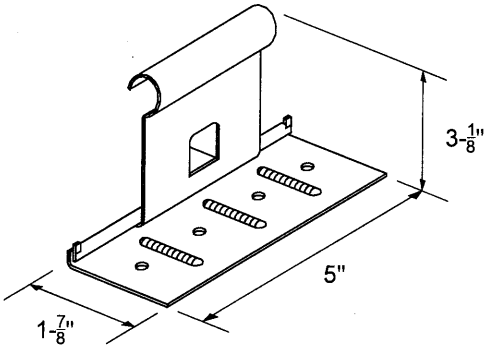

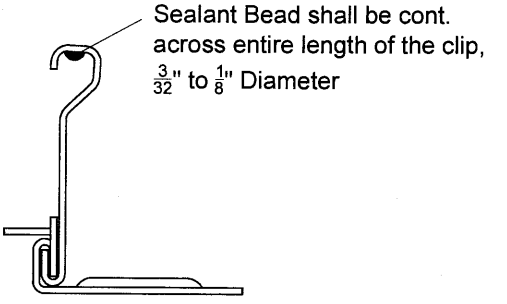

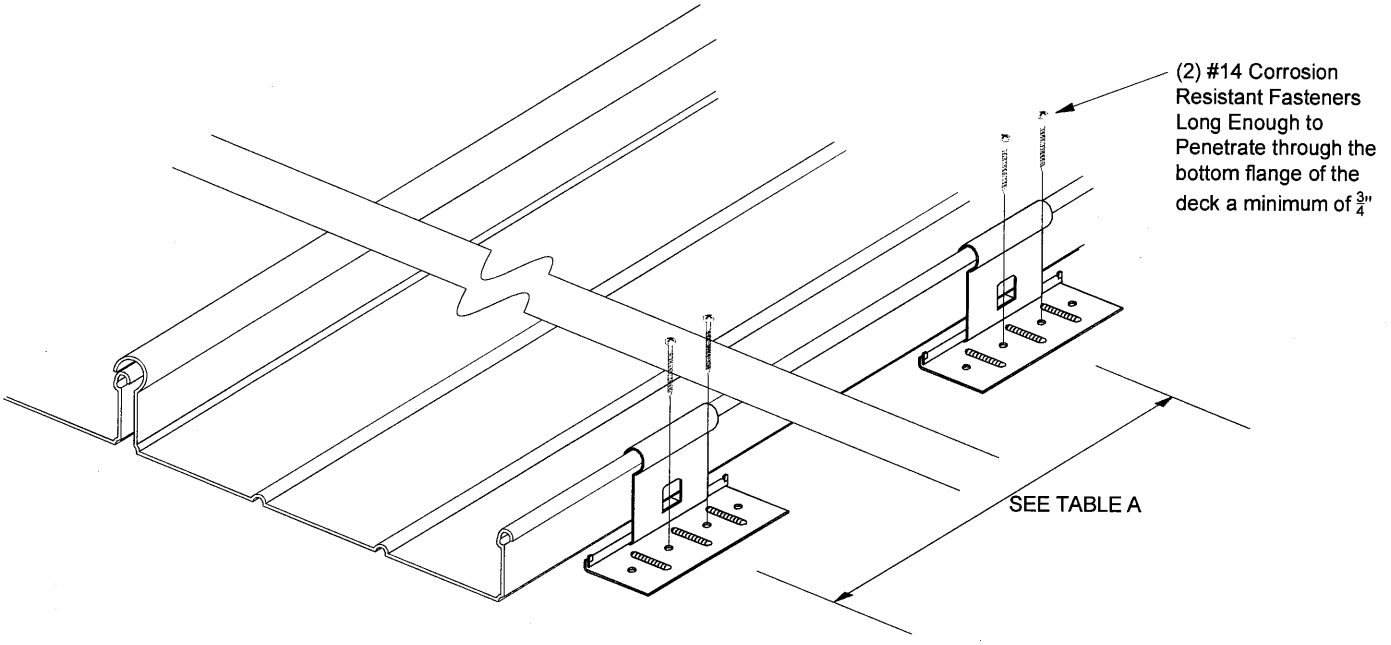

BEMO 305 ALUMINUM STANDING SEAM PANEL

END OF THIS ACCEPTANCE