MIAMI-DADE COUNTY

BUILDING CODE COMPLIANCE OFFICE (BCCO)
PRODUCT CONTROL DIVISION

MIAMI–DADE COUNTY, FLORIDA
METRO–DADE FLAGLER BUILDING
140 WEST FLAGLER STREET, SUITE 1107
MIAMI, FLORIDA 33130–1563
(305) 375–2902 FAX (305) 372–6339
www.miamidade.gov/buildingcode

NOTICE OF ACCEPTANCE (NOA)

R.C. Aluminum Industries, Inc.
2805 N.W. 75th Avenue
Miami, FL 33122

SCOPE: This NOA is being issued under the applicable rules and regulations governing the use of construction materials. The documentation submitted has been reviewed by Miami–Dade County Product Control Division and accepted by the Board of Rules and Appeals (BORA) to be used in Miami–Dade County and other areas where allowed by the Authority Having Jurisdiction (AHJ).
This NOA shall not be valid after the expiration date stated below. The Miami–Dade County Product Control Division (In Miami–Dade County) and/or the AHJ (in areas other than Miami–Dade County) reserve the right to have this product or material tested for quality assurance purposes. If this product or material fails to perform in the accepted manner, the manufacturer will incur the expense of such testing and the AHJ may immediately revoke, modify, or suspend the use of such product or material within their jurisdiction. BORA reserves the right to revoke this acceptance, if it is determined by Miami–Dade County Product Control Division that this product or material fails to meet the requirements of the applicable building code.
This product is approved as described herein, and has been designed to comply with the Florida Building Code, including the High Velocity Hurricane Zone.

DESCRIPTION: Series FX 345 Aluminum Window Wall System – S.M.I.

APPROVAL DOCUMENT: Drawing No. **W03–46**, titled "Series "FX–345" Aluminum Window Wall System (S.M.I.)", sheets 1 through 9 of 9, dated 06/21/03, with revision "G" dated 07/09/09, prepared by Al–Farooq Corporation, signed and sealed by Arshad Viqar, P. E., bearing the Miami–Dade County Product Control Revision stamp with the Notice of Acceptance number and expiration date by the Miami-Dade County Product Control Division.

MISSILE IMPACT RATING: Small Missile Impact Resistant

LIMITATIONS:

Miami–Dade County Product Control Approved Shutters Or Protection Devises Shall Be Required.

LABELING: Each unit shall bear a permanent label with the manufacturer's name or logo, city, state and following statement: "Miami–Dade County Product Control Approved", unless otherwise noted herein.

RENEWAL of this NOA shall be considered after a renewal application has been filed and there has been no change in the applicable building code negatively affecting the performance of this product.

TERMINATION of this NOA will occur after the expiration date or if there has been a revision or change in the materials, use, and/or manufacture of the product or process. Misuse of this NOA as an endorsement of any product, for sales, advertising or any other purposes shall automatically terminate this NOA. Failure to comply with any section of this NOA shall be cause for termination and removal of NOA.

ADVERTISEMENT: The NOA number preceded by the words Miami–Dade County, Florida, and followed by the expiration date may be displayed in advertising literature. If any portion of the NOA is displayed, then it shall be done in its entirety.

INSPECTION: A copy of this entire NOA shall be provided to the user by the manufacturer or its distributors and shall be available for inspection at the job site at the request of the Building Official.
This NOA **revises and renews NOA No. 07–0831.04** and consists of this page 1 and evidence pages E–1, E–2 and E–3, as well as approval document mentioned above.
The submitted documentation was reviewed by **Jaime D. Gascon, P. E.**

MIAMI-DADE COUNTY APPROVED

J. Gascon
7/27/09

R.C. Aluminum Industries, Inc.

NOTICE OF ACCEPTANCE: EVIDENCE SUBMITTED

A. DRAWINGS

1. Manufacturers die drawings and sections.
2. Drawing No. **W03–46**, titled "Series "FX–345" Aluminum Window Wall System (S.M.I.)", sheets 1 through 9 of 9, dated 06/21/03, with revision "G" dated 07/09/09, prepared by Al–Farooq Corporation, signed and sealed by Arshad Viqar, P. E.

B. TESTS

1. Test reports on: 1) Safety Glazing Materials Used in Buildings, per American National Standard for, ANSI Z-97.1 and (CPSC 16 CFR 1201),
   along with marked–up and die drawings of aluminum window wall system, prepared by Fenestration Testing Laboratory, Inc., Test Report No. **FTL–5320,** dated 07/05/07, signed and sealed by Carlos S. Rionda, P. E.
   (Submitted under NOA No. 07–0813.04)
2. Test reports on: 1) Air Infiltration Test, per FBC, TAS 202–94
   2) Uniform Static Air Pressure Test, Loading per FBC, TAS 202–94
   3) Water Resistance Test, per FBC, TAS 202–94
   4) Small Missile Impact Test per FBC, TAS 201–94
   5) Cyclic Wind Pressure Loading per FBC, TAS 203–94
   along with marked–up drawings and installation diagram of aluminum window wall system, prepared by Fenestration Testing Laboratory, Inc., Test Report No. **FTL–4612**, dated 05/17/05, signed and sealed by Edmundo J. Largaespada, P. E.
   (Submitted under NOA No. 05–1214.02)
3. Test reports on: 1) Air Infiltration Test, per FBC, TAS 202–94
   2) Uniform Static Air Pressure Test, Loading per FBC, TAS 202–94
   3) Water Resistance Test, per FBC, TAS 202–94
   4) Small Missile Impact Test per FBC, TAS 201–94
   5) Cyclic Wind Pressure Loading per FBC, TAS 203–94
   along with marked–up drawings and installation diagram of aluminum window wall system, prepared by Fenestration Testing Laboratory, Inc., Test Report No. **FTL–3719**, dated 02/26/03, signed and sealed by Joseph C. Chan, P. E.
   (Submitted under NOA No. 04–0831.04)
4. Test reports on: 1) Air Infiltration Test, per FBC, TAS 202–94
   2) Uniform Static Air Pressure Test, Loading per FBC, TAS 202–94
   3) Water Resistance Test, per FBC, TAS 202–94
   4) Small Missile Impact Test per FBC, TAS 201–94
   5) Cyclic Wind Pressure Loading per FBC, TAS 203–94
   along with marked–up drawings and installation diagram of aluminum window wall system, prepared by Fenestration Testing Laboratory, Inc., Test Report No. **FTL–3713**, dated 02/14/03, signed and sealed by Edmundo J. Largaespada, P. E.
   (Submitted under NOA No. 04–0830.01)

Jaime D. Gascon, P. E.
Chief, Product Control Division
NOA No 09–0615.03
Expiration Date: June 10, 2014
Approval Date: August 19, 2009

NOTICE OF ACCEPTANCE: EVIDENCE SUBMITTED

B. TESTS (CONTINUED)

5. Test reports on: 1) Small Missile Impact Test per FBC, TAS 201–94
2) Cyclic Wind Pressure Loading per FBC, TAS 203–94
along with marked–up drawings and installation diagram of aluminum window wall system, prepared by Fenestration Testing Laboratory, Inc., Test Report No. **FTL–3478**, dated 07/03/02, signed and sealed by Edmundo J. Largaespada, P. E.
(Submitted under NOA No. 03–1023.02)

6. Test reports on: 1) Small Missile Impact Test per FBC, TAS 201–94
2) Cyclic Wind Pressure Loading per FBC, TAS 203–94
along with marked–up drawings and installation diagram of aluminum window wall system, prepared by Hurricane Engineering & Testing, Inc., Test Report No. **HETI–01–1031**, dated 06/11/01, revised on 08/06/03, signed and sealed by Rafael E. Droz–Seda, P. E.
(Submitted under NOA No. 99–0204.07)

7. Test reports on: 1) Air Infiltration Test, per FBC, TAS 202–94
2) Uniform Static Air Pressure Test, Loading per FBC, TAS 202–94
3) Water Resistance Test, per FBC, TAS 202–94
along with marked–up drawings and installation diagram of aluminum window wall system, prepared by Hurricane Engineering & Testing, Inc., Test Report No. **HETI–01–1189**, dated 06/01/01, signed and sealed by Rafael E. Droz–Seda, P. E.
(Submitted under NOA No. 99–0204.07)

C. CALCULATIONS

1. Revised Anchor Calculations, and structural analysis, complying with FBC 2007, dated 05/04/09, prepared by Al–Farooq Corporation, signed and sealed by Arshad Viqar, P.E.
Complies with ASTM E1300–02/ 04

D. QUALITY ASSURANCE

1. Miami Dade Building Code Compliance Office (BCCO)

E. MATERIAL CERTIFICATIONS

1. Notice of Acceptance No. **09–0312.02** issued to E.I. DuPont DeNemours & Co., Inc. for their "**DuPont Butacite® PVB, Interlayer**" dated 05/13/09, expiring on 12/11/10.
2. Notice of Acceptance No. **06–0216.06** issued to Solutia Inc. for their "**Saflex IIIG Clear or colored interlayer**" dated 05/04/06, expiring on 05/21/11.

F. STATEMENTS

1. Statement letter of no financial interest issued by Al–Farooq Corporation, dated 05/04/09, signed and sealed by Arshad Viqar, P. E.

Jaime D. Gascon, P. E.
Chief, Product Control Division
NOA No 09–0615.03
Expiration Date: June 10, 2014
Approval Date: August 19, 2009

NOTICE OF ACCEPTANCE: EVIDENCE SUBMITTED

F. STATEMENTS (CONTINUED)

2. Statement letter of Code Compliance issued by Al–Farooq Corporation, dated 05/04/09, signed and sealed by Arshad Viqar, P. E.
3. Statement letter of changes issued by Al–Farooq Corporation, dated 05/04/09, signed and sealed by Arshad Viqar, P. E.

G. OTHERS

1. Notice of Acceptance **No. 07–0831.04**, issued to R. C. Aluminum Industries, Inc., for Series "FX 345 Aluminum Window Wall System – S.M.I.", approved on 04/10/08, and expiring on 06/10/09.

Jaime D. Gascon, P. E.
Chief, Product Control Division
NOA No 09–0615.03
Expiration Date: June 10, 2014
Approval Date: August 19, 2009

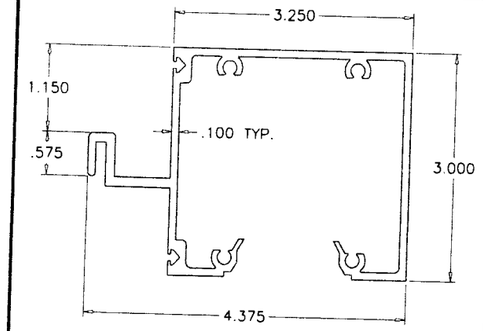

1 FRAME HEAD/SILL

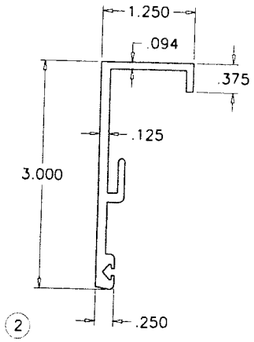

2 GLAZING RETAINER HEAD/SILL

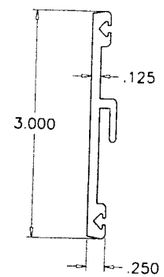

2B GLAZING RETAINER HORIZONTAL

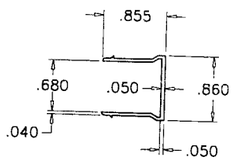

7 SNAP-IN COVER JAMB

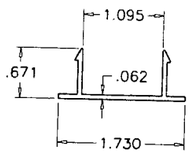

6 SNAP-IN COVER HEAD/SILL

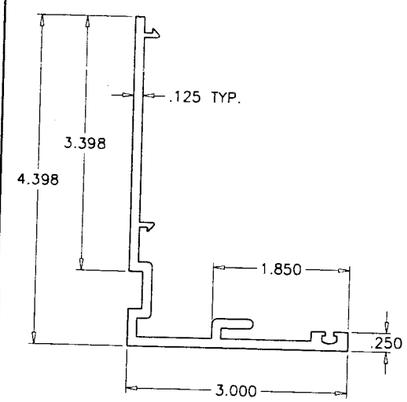

2A GLAZING RETAINER JAMB

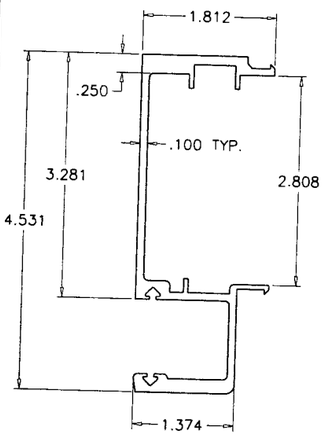

5 MALE MULLION

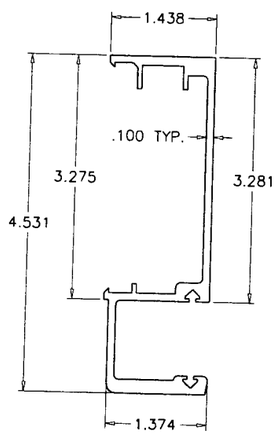

4 FEMALE MULLION

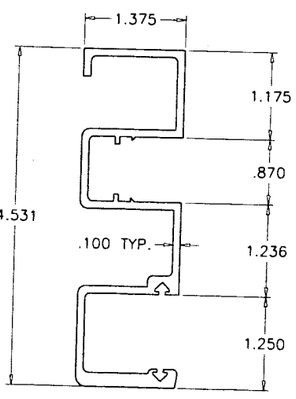

3 FRAME JAMB

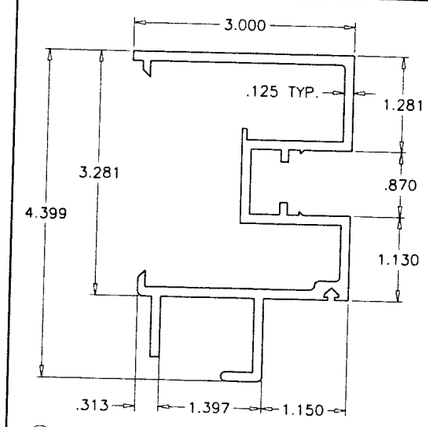

3A ALT. FRAME JAMB 1

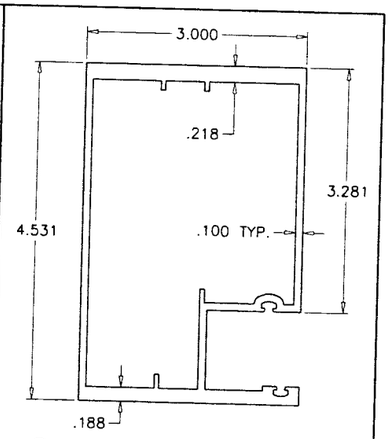

3B ALT. FRAME JAMB 2

MATERIALS LIST

ITEM NO.	PART NO.	QUANTITY	DESCRIPTION	MATERIAL	MANF./SUPPLIER/REMARKS
1	FX345-04	AS REQD.	FRAME HEAD/SILL	6063-T6	ALUMAX OR EQUIV.
2	FX345-06	AS REQD.	GLAZING RETAINER (HEAD/SILL)	6063-T5	ALUMAX OR EQUIV.
2A	FX345-013	AS REQD.	GLAZING RETAINER (JAMB)	6063-T6	ALUMAX OR EQUIV.
2B	FX345-05	AS REQD.	GLAZING RETAINER (HORIZONTAL)	6063-T6	ALUMAX OR EQUIV.
3	FX345-09	AS REQD.	FRAME JAMB	6063-T5	ALUMAX OR EQUIV.
3A	FX345-012	AS REQD.	ALT. FRAME JAMB 1	6063-T6	ALUMAX OR EQUIV.
3B	FX345-049	AS REQD.	ALT. FRAME JAMB 2	6063-T6	ALUMAX OR EQUIV.
4	FX345-01	AS REQD.	FEMALE MULLION	6063-T6	ALUMAX OR EQUIV.
5	FX345-02	AS REQD.	MALE MULLION	6063-T6	ALUMAX OR EQUIV.
6	FX345-07	AS REQD.	SNAP-IN COVER HEAD/SILL	6063-T5	ALUMAX OR EQUIV.
7	245FX011	AS REQD.	SNAP-IN COVER JAMB	6063-T5	ALUMAX OR EQUIV.
8	WV-8215	AS REQD.	GLAZING GASKET	VINYL	WIBORG
9	WV-3289	AS REQD.	BULB WEATHERSTRIPPING	VINYL	WIBORG
10	-	2/ LITE	SETTING BLOCKS (3/4" X 5/8" X 3-1/4")	NEOPRENE	LOWE
11	-	-	SEALANT DOW CORNING 795 OR EQUAV.	SILICONE	AT EXT. GLASS PERIMETER
12	-	AS REQD.	REINFORCING BAR (1/2" X 3" X 90")	STEEL, A36	MIN. Fy=36 KSI, SILICONED IN PLACE
13	-	4/ CORNER	FRAME ASSEMBLY SCREWS	--	#12 X 1-1/4" PH SMS

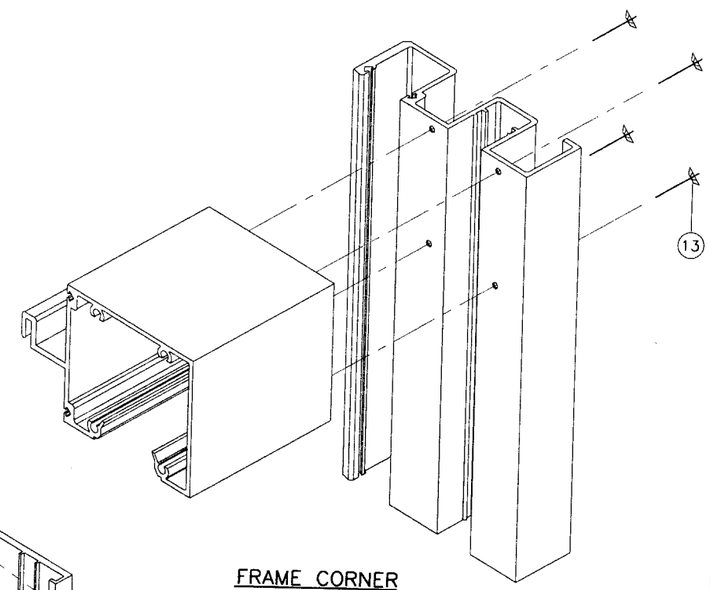

FRAME CORNER

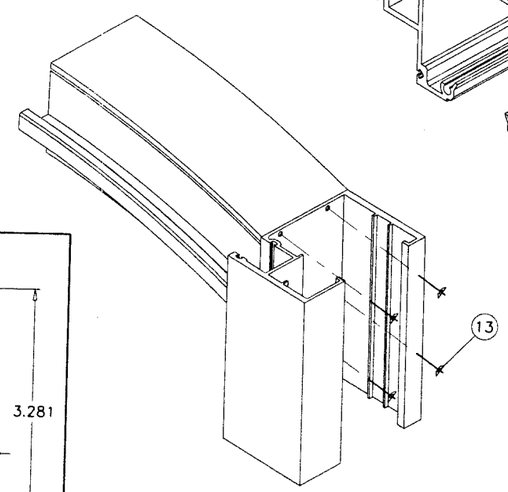

RADIUS CORNER

Engr: ARSHAD VIQAR
CIVIL
FLA. PE # 38863
C.A.N. 3538

JUL 1 3 2009

PRODUCT REVISED
as complying with the Florida
Building Code
Acceptance No 09-0615.03
Expiration Date JUNE 10, 2014
By
Miami Dade Product Control
Division

AL-FAROOQ CORPORATION
ENGINEERS & PRODUCT DEVELOPMENT
1235 S.W. 87 AVE
MIAMI, FLORIDA 33174
TEL. (305) 264-8100 FAX. (305) 262-6978
STORE\W03-46RC

FX-345 ALUM. WINDOW WALL SYSTEM (S.M.I.)

R.C. ALUMINUM INDUSTRIES INC.
2805 N.W. 75 TH AVE.
MIAMI, FL. 33122
TEL. (305) 592-1515 FAX. (305) 592-2184

revisions:

no	date	by	description
C	11.04.05		NO CHANGE THIS SHEET
D	06.27.06		NO CHANGE THIS SHEET
E	07.16.07		JAMB TYPE 2 REV.
F	05.05.09		UPDATED FOR 2007 FBC
G	07.09.09		DIMS. ADDED

date: 06-21-03
scale: 1/2" = 1"
dr. by: HAMID
chk. by:

drawing no.
W03-46

sheet 9 of 9

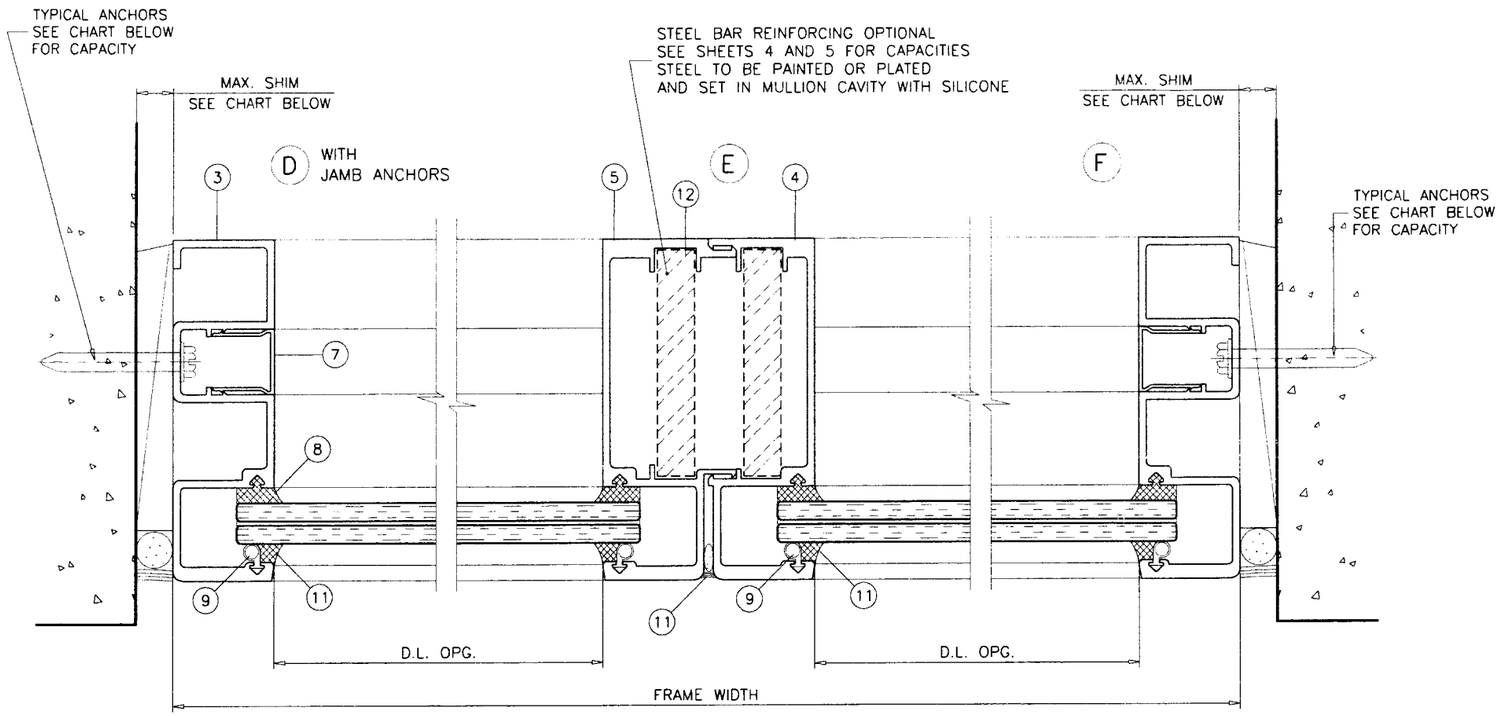

EXTERIOR

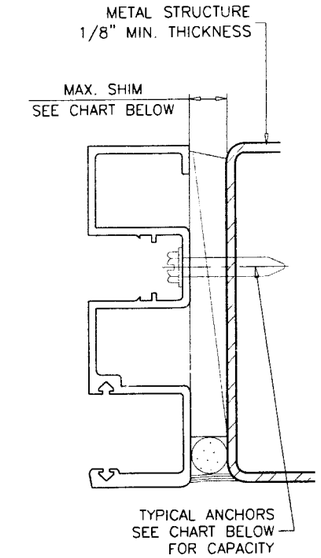

JAMB WITH FRAME ANCHORS

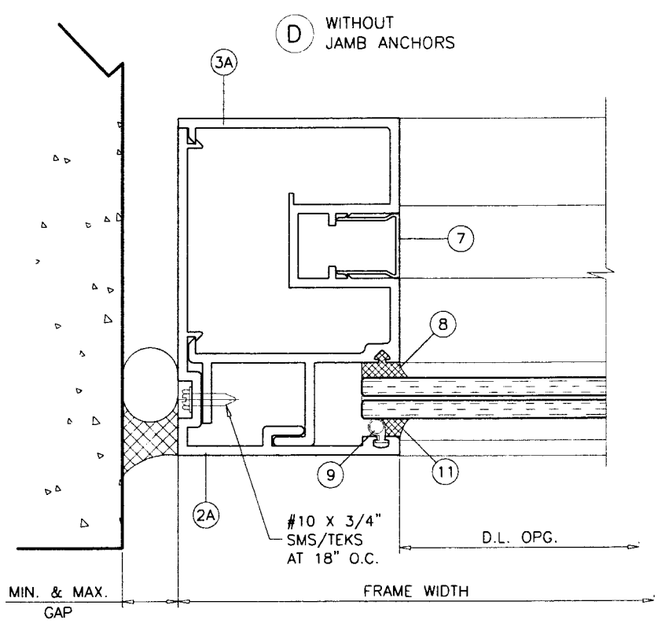

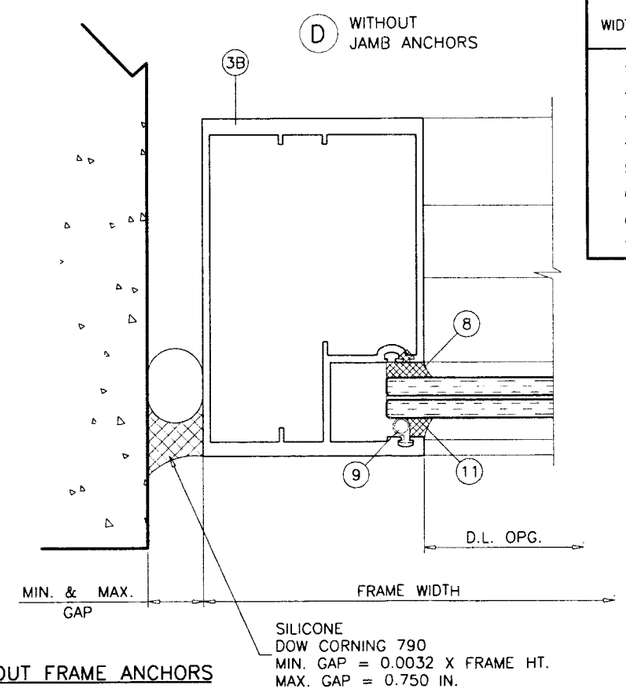

OPTIONAL JAMBS WITHOUT FRAME ANCHORS

JAMB ANCHORS DESIGN LOAD CAPACITY – PSF 12" O.C. MAX. SPACING				
	3/8" MAX. SHIM SPACE		5/8" MAX. SHIM SPACE	
	TYPE 'A'	TYPE 'B'	TYPE 'A'	TYPE 'B'
WIDTH (W)	EXT. (+) INT. (–)	EXT. (+) INT. (–)	EXT. (+) INT. (–)	EXT. (+) INT. (–)
30"	143.0	143.0	143.0	141.0
36"	143.0	143.0	143.0	117.0
42"	143.0	143.0	143.0	101.0
48"	143.0	128.0	143.0	88.0
54"	143.0	113.0	143.0	78.0
60"	143.0	102.0	128.0	70.0
66"	143.0	93.0	117.0	64.0
72"	143.0	85.0	107.0	59.0

6" O.C. MAX. ANCHOR SPACING
DESIGN LOAD CAPACITY = 143 PSF
5/8" MAX. SHIM SPACE

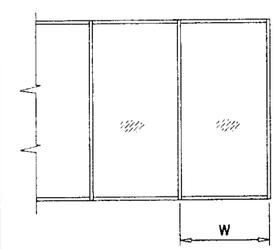

Engr: ARSHAD VIQAR
CIVIL
FLA PE # 38863
C.A.N. 3538

JUL 1 3 2009

PRODUCT REVISED
as complying with the Florida
Building Code
Acceptance No 09-0615.03
Expiration Date JUNE 10, 2014
By
Miami Dade Product Control
Division

AL-FAROOQ CORPORATION
ENGINEERS & PRODUCT DEVELOPMENT
1235 S.W. 87 AVE
MIAMI, FLORIDA 33174
TEL. (305) 264-8100 FAX. (305) 262-6978

STORE\W03-46RC

FX-345 ALUM. WINDOW WALL SYSTEM (S.M.I.)

R.C. ALUMINUM INDUSTRIES INC.
2805 N.W. 75 TH AVE.
MIAMI, FL. 33122
TEL. (305) 592-1515 FAX. (305) 592-2184

revisions:

no	date	by	description
C	11.04.05		JAMB ANCHORS REV.
D	06.27.06		NO CHANGE THIS SHEET
E	07.16.07		JAMB TYPE 2 REV.
F	05.05.09		UPDATED FOR 2007 FBC
G	07.09.09		NO CHANGE THIS SHEET

date: 06-21-03
scale: 1/2" = 1"
dr. by: HAMID
chk. by:

drawing no.
W03-46

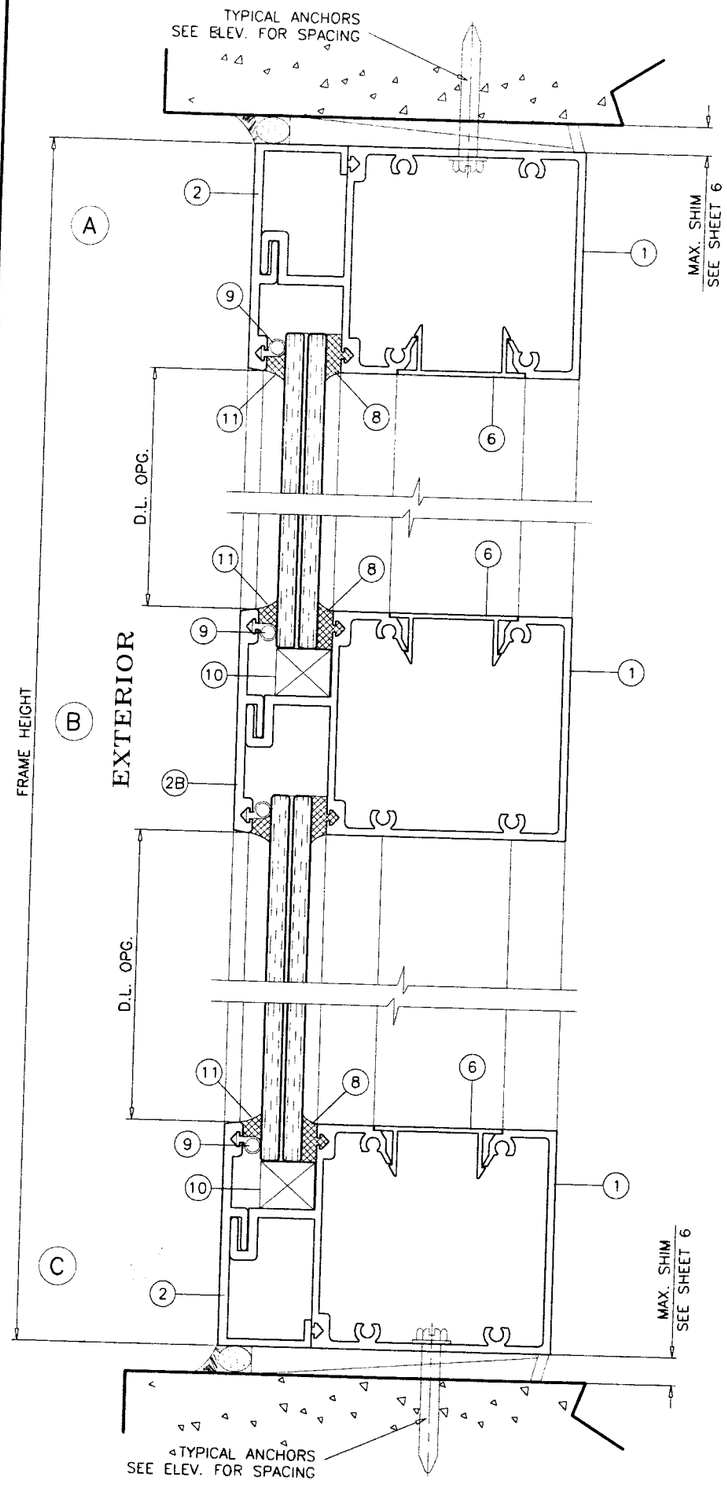

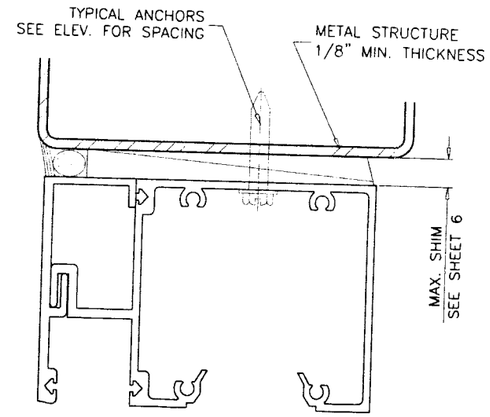

METAL STRUCTURES NOT BY RC ALUMINUM
MUST SUPPORT LOADS IMPOSED BY GLAZING SYSTEM AND
TRANSFER THEM TO THE BUILDING STRUCTURE.

TYPICAL ANCHORS: SEE ELEV. FOR SPACING

TYPE 'A'– 1/4" HILTI KWIK-CON II (Fu=163 KSI, Fy=157 KSI)

DIRECTLY INTO CONCRETE
1-5/8" MIN. EMBED INTO CONCRETE

TYPE 'B'– 1/4" HILTI KWIK-FLEX SELF DRILLING SCREWS (Fu=92 KSI, Fy=120 KSI)
INTO METAL STRUCTURES

STEEL : 1/8" THK. MIN. (Fy = 36 KSI MIN.)
ALUMINUM : 1/8" THK. MIN. (6063-T6 MIN.)
(STEEL IN CONTACT WITH ALUMINUM TO BE PLATED OR PAINTED)

ANCHOR EDGE DISTANCES

INTO CONCRETE = 2-1/2" MIN.
INTO METAL STRUCTURE = 3/4" MIN.

CONCRETE f'c = 3000 PSI MIN.
MASONRY f'm = 1600 PSI MIN.

SEALANTS:

ALL FRAME CORNERS AND MULLION SEAMS SEALED
WITH DOW CORNING 795 SILICONE.

Engr: ARSHAD VIQAR
CIVIL
FLA. PE # 38863
C.A.N. 3538

JUL 1 3 2009

PRODUCT REVISED
as complying with the Florida
Building Code
Acceptance No 09-0615.03
Expiration Date JUNE 10, 2014
By
Miami Dade Product Control
Division

AL-FAROOQ CORPORATION
ENGINEERS & PRODUCT DEVELOPMENT
1235 S.W. 87 AVE
MIAMI, FLORIDA 33174
TEL. (305) 264-8100 FAX. (305) 262-6978

STORE\W03-46RC

FX-345 ALUM. WINDOW WALL SYSTEM (S.M.I.)

R.C. ALUMINUM INDUSTRIES INC.
2805 N.W. 75 TH AVE.
MIAMI, FL. 33122
TEL. (305) 592-1515 FAX. (305) 592-2184

revisions:

no	date	by	description
C	11.04.05		NO CHANGE THIS SHEET
D	06.27.06		NO CHANGE THIS SHEET
E	07.16.07		NO CHANGE THIS SHEET
F	05.05.09		UPDATED FOR 2007 FBC
G	07.09.09		SEALANT REV.

date: 06-21-03
scale: 1/2" = 1"
dr. by: HAMID
chk. by:

drawing no.
W03-46

ANCHOR DESIGN LOAD CAPACITY – PSF

NOMINAL DIMS.		2 ANCHORS @ EACH SIDE OF JAMB OR MULL				3 ANCHORS @ EACH SIDE OF JAMB OR MULL			
		3/8" MAX. SHIM SPACE		5/8" MAX. SHIM SPACE		3/8" MAX. SHIM SPACE		5/8" MAX. SHIM SPACE	
		TYPE 'A'	TYPE 'B'	TYPE 'A'	TYPE 'B'	TYPE 'A'	TYPE 'B'	TYPE 'A'	TYPE 'B'
WIDTH (W)	FRAME HEIGHT	EXT. (+) INT. (−)	EXT. (+) INT. (−)	EXT. (+) INT. (−)	EXT. (+) INT. (−)	EXT. (+) INT. (−)	EXT. (+) INT. (−)	EXT. (+) INT. (−)	EXT. (+) INT. (−)
30"	60"	130.0	130.0	130.0	112.8	130.0	130.0	130.0	130.0
36"		130.0	130.0	130.0	94.0	130.0	130.0	130.0	130.0
42"		130.0	116.5	130.0	80.6	130.0	130.0	130.0	120.8
48"		130.0	101.9	128.3	70.5	130.0	130.0	130.0	105.7
54"		130.0	90.6	114.0	62.7	130.0	130.0	130.0	94.0
60"		130.0	81.5	102.6	56.4	130.0	122.3	130.0	84.6
66"		130.0	74.1	93.3	51.3	130.0	111.2	130.0	76.9
72"		123.8	67.9	85.5	47.0	130.0	101.9	128.3	70.5
30"	66"	130.0	130.0	130.0	102.5	130.0	130.0	130.0	130.0
36"		130.0	123.5	130.0	85.5	130.0	130.0	130.0	128.1
42"		130.0	105.9	130.0	73.2	130.0	130.0	130.0	109.8
48"		130.0	92.6	116.6	64.1	130.0	130.0	130.0	96.1
54"		130.0	82.3	103.7	57.0	130.0	123.6	130.0	85.4
60"		130.0	74.1	93.3	51.3	130.0	111.2	130.0	76.9
66"		122.8	67.4	84.8	46.6	130.0	101.1	127.2	69.9
72"		112.5	61.8	77.8	42.7	130.0	92.7	116.6	64.1
30"	72"	130.0	130.0	130.0	94.0	130.0	130.0	130.0	130.0
36"		130.0	113.2	130.0	78.3	130.0	130.0	130.0	117.4
42"		130.0	97.0	122.2	67.1	130.0	130.0	130.0	100.7
48"		130.0	84.9	106.9	58.8	130.0	127.4	130.0	88.1
54"		130.0	75.5	95.0	52.2	130.0	113.3	130.0	78.3
60"		123.8	67.9	85.5	47.0	130.0	101.9	128.3	70.5
66"		112.5	61.8	77.8	42.7	130.0	92.7	116.6	64.1
72"		103.2	56.6	71.3	39.2	130.0	84.9	106.9	58.7
30"	78"	130.0	125.4	130.0	86.8	130.0	130.0	130.0	130.0
36"		130.0	104.5	130.0	72.3	130.0	130.0	130.0	108.4
42"		130.0	89.6	112.8	62.0	130.0	130.0	130.0	92.9
48"		130.0	78.4	98.7	54.2	130.0	117.6	130.0	81.3
54"		127.0	69.7	87.7	48.2	130.0	104.5	130.0	72.3
60"		114.3	62.7	79.0	43.4	130.0	94.1	118.4	65.0
66"		103.9	57.0	71.8	39.4	130.0	85.5	107.6	59.1
72"		95.2	52.3	65.8	36.2	130.0	78.4	98.7	54.2
30"	84"	130.0	116.5	130.0	80.6	130.0	130.0	130.0	120.8
36"		130.0	97.0	122.2	67.1	130.0	130.0	130.0	100.7
42"		130.0	83.2	104.7	57.6	130.0	124.8	130.0	86.3
48"		130.0	72.8	91.6	50.4	130.0	109.2	130.0	75.5
54"		117.9	64.7	81.5	44.8	130.0	97.1	122.2	67.1
60"		106.1	58.2	73.3	40.3	130.0	87.4	109.9	60.4
66"		96.5	52.9	66.6	36.6	130.0	79.4	99.9	54.9
72"		88.4	48.5	61.1	33.6	130.0	72.8	91.6	50.3
30"	90"	130.0	108.7	130.0	75.2	130.0	130.0	130.0	112.7
36"		130.0	90.6	114.0	62.7	130.0	130.0	130.0	94.0
42"		130.0	77.6	97.8	53.7	130.0	116.5	130.0	80.5
48"		123.8	67.9	85.5	47.0	130.0	101.9	128.3	70.5
54"		110.0	60.4	76.0	41.8	130.0	90.6	114.0	62.6
60"		99.0	54.3	68.4	37.6	130.0	81.5	102.6	56.4
66"		90.0	49.4	62.2	34.2	130.0	74.1	93.3	51.2
72"		82.5	45.3	57.0	31.3	123.8	68.0	85.5	47.0
30"	96"	130.0	101.9	128.3	70.5	130.0	130.0	130.0	105.7
36"		130.0	84.9	106.9	58.8	130.0	127.4	130.0	88.1
42"		130.0	72.8	91.6	50.4	130.0	109.2	130.0	75.5
48"		116.1	63.7	80.2	44.1	130.0	95.6	120.3	66.1
54"		103.2	56.6	71.3	39.2	130.0	84.9	106.9	58.7
60"		92.9	51.0	64.2	35.3	130.0	76.5	96.2	52.9
66"		84.4	46.3	58.3	32.0	126.6	69.5	87.5	48.0
72"		77.4	42.5	53.5	29.4	116.0	63.7	80.2	44.0

ANCHOR DESIGN LOAD CAPACITY – PSF

NOMINAL DIMS.		2 ANCHORS @ EACH SIDE OF JAMB OR MULL				3 ANCHORS @ EACH SIDE OF JAMB OR MULL			
		3/8" MAX. SHIM SPACE		5/8" MAX. SHIM SPACE		3/8" MAX. SHIM SPACE		5/8" MAX. SHIM SPACE	
		TYPE 'A'	TYPE 'B'	TYPE 'A'	TYPE 'B'	TYPE 'A'	TYPE 'B'	TYPE 'A'	TYPE 'B'
WIDTH (W)	FRAME HEIGHT	EXT. (+) INT. (−)	EXT. (+) INT. (−)	EXT. (+) INT. (−)	EXT. (+) INT. (−)	EXT. (+) INT. (−)	EXT. (+) INT. (−)	EXT. (+) INT. (−)	EXT. (+) INT. (−)
30"	102"	130.0	95.9	120.8	66.4	130.0	130.0	130.0	99.5
36"		130.0	79.9	100.6	55.3	130.0	119.9	130.0	82.9
42"		124.8	68.5	86.3	47.4	130.0	102.8	129.3	71.1
48"		109.2	59.9	75.5	41.5	130.0	89.9	113.2	62.2
54"		97.1	53.3	67.1	36.9	130.0	79.9	100.6	55.3
60"		87.4	48.0	60.4	33.2	130.0	72.0	90.5	49.7
66"		79.4	43.6	54.9	30.2	119.1	65.4	82.3	45.2
30"	108"	130.0	90.6	114.0	62.7	130.0	130.0	130.0	94.0
36"		130.0	75.5	95.0	52.2	130.0	113.3	130.0	78.3
42"		117.9	64.7	81.5	44.8	130.0	97.1	122.2	67.1
48"		103.2	56.6	71.3	39.2	130.0	84.9	106.9	58.7
54"		91.7	50.3	63.4	34.8	130.0	75.5	95.0	52.2
60"		82.5	45.3	57.0	31.3	123.8	68.0	85.5	47.0
30"	114"	130.0	85.8	108.0	59.4	130.0	128.8	130.0	89.0
36"		130.0	71.5	90.0	49.5	130.0	107.3	130.0	74.2
42"		111.7	61.3	77.2	42.4	130.0	92.0	115.7	63.6
48"		97.7	53.6	67.5	37.1	130.0	80.5	101.3	55.6
54"		86.9	47.7	60.0	33.0	130.0	71.5	90.0	49.5
60"		78.2	42.9	54.0	29.7	117.3	64.4	81.0	44.5
30"	120"	130.0	81.5	102.6	56.4	130.0	122.3	130.0	84.6
36"		123.8	67.9	85.5	47.0	130.0	101.9	128.3	70.5
42"		106.1	58.2	73.3	40.3	130.0	87.4	109.9	60.4
48"		92.9	51.0	64.2	35.3	130.0	76.5	96.2	52.9
54"		82.5	45.3	57.0	31.3	123.8	68.0	85.5	47.0
30"	126"	130.0	77.6	97.8	53.7	130.0	116.5	130.0	80.5
36"		117.9	64.7	81.5	44.8	130.0	97.1	122.2	67.1
42"		101.1	55.5	69.8	38.4	130.0	83.2	104.7	57.5
48"		88.4	48.5	61.1	33.6	130.0	72.8	91.6	50.3
54"		78.6	43.1	54.3	29.8	117.9	64.7	81.4	44.7
30"	132"	130.0	74.1	93.3	51.3	130.0	111.2	130.0	76.9
36"		112.5	61.8	77.8	42.7	130.0	92.7	116.6	64.1
42"		96.5	52.9	66.6	36.6	130.0	79.4	99.9	54.9
48"		84.4	46.3	58.3	32.0	126.6	69.5	87.5	48.0

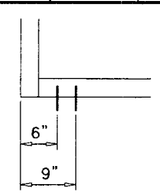

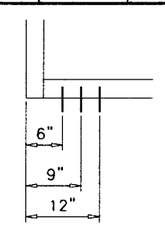

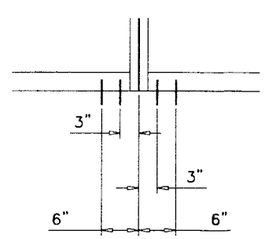

TWO ANCHORS AT EACH SIDE OF MULLION OR JAMB

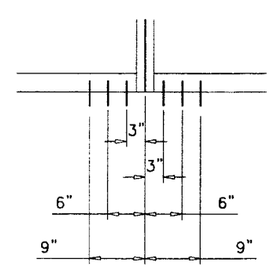

THREE ANCHORS AT EACH SIDE OF MULLION OR JAMB

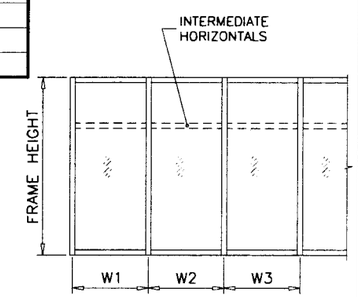

WIDTH (W) = W1
AT FRAME JAMB

WIDTH (W) = $\frac{W2 + W3}{2}$
AT FRAME MULLION

Engr: ARSHAD VIQAR
CIVIL
FLA. PE # 38863
C.A.N. 3538

JUL 1 3 2009

PRODUCT REVISED
as complying with the Florida Building Code
Acceptance No 09-0615.03
Expiration Date JUNE 10, 2014
By
Miami Dade Product Control Division

AL-FAROOQ CORPORATION
ENGINEERS & PRODUCT DEVELOPMENT
1235 S.W. 87 AVE
MIAMI, FLORIDA 33174
TEL. (305) 264-8100 FAX. (305) 262-6978
STORE\W03-46RC

FX-345 ALUM. WINDOW WALL SYSTEM (S.M.I.)

R.C. ALUMINUM INDUSTRIES INC.
2805 N.W. 75 TH AVE.
MIAMI, FL. 33122
TEL. (305) 592-1515 FAX. (305) 592-2184

revisions:

no	date	by	description
C	11.04.05		CHART REV.
D	06.27.06		REV. PER BCCO COMMENTS
E	07.16.07		NO CHANGE THIS SHEET
F	05.05.09		UPDATED FOR 2007 FBC
G	07.09.09		NO CHANGE THIS SHEET

date: 06-21-03
scale: 1/2"=1'-0"
dr. by: HAMID
chk. by:

drawing no.
W03-46

sheet 6 of 9

JAMB & MULLION DESIGN LOAD CAPACITY – PSF
WITH INTERMEDIATE HORIZONTALS

NOMINAL DIMS.		JAMB TYPE 'J1'	JAMB TYPE 'J2'	MULL TYPE 'M1'	MULL TYPE 'M2'	MULL TYPE 'M3'
WIDTH (W)	FRAME HEIGHT	EXT.(+) & INT.(–)	EXT.(+) & INT.(–)	EXT.(+) & INT.(–)	EXT.(+) & INT.(–)	EXT.(+) & INT.(–)
30"	60"	130.0	120.0	120.0	130.0	130.0
36"		130.0	120.0	120.0	130.0	130.0
42"		130.0	120.0	120.0	130.0	130.0
48"		130.0	120.0	120.0	130.0	130.0
54"		130.0	120.0	120.0	130.0	130.0
60"		130.0	120.0	120.0	130.0	130.0
66"		130.0	120.0	120.0	130.0	130.0
72"		130.0	120.0	120.0	130.0	130.0
30"	66"	130.0	120.0	120.0	130.0	130.0
36"		130.0	120.0	120.0	130.0	130.0
42"		130.0	120.0	120.0	130.0	130.0
48"		130.0	120.0	120.0	130.0	130.0
54"		130.0	120.0	120.0	130.0	130.0
60"		130.0	120.0	120.0	130.0	130.0
66"		130.0	120.0	120.0	130.0	130.0
72"		120.0	120.0	120.0	120.0	120.0
30"	72"	130.0	120.0	120.0	130.0	130.0
36"		130.0	120.0	120.0	130.0	130.0
42"		130.0	120.0	120.0	130.0	130.0
48"		130.0	120.0	120.0	130.0	130.0
54"		130.0	120.0	120.0	130.0	130.0
60"		130.0	120.0	120.0	130.0	130.0
66"		120.0	120.0	120.0	120.0	120.0
72"		120.0	120.0	112.0	112.0	112.0
30"	78"	130.0	120.0	120.0	130.0	130.0
36"		130.0	120.0	120.0	130.0	130.0
42"		130.0	120.0	120.0	130.0	130.0
48"		130.0	120.0	120.0	130.0	130.0
54"		130.0	120.0	120.0	130.0	130.0
60"		130.0	120.0	113.2	130.0	130.0
66"		120.0	120.0	102.9	105.0	105.0
72"		120.0	120.0	–	105.0	105.0
30"	84"	130.0	120.0	120.0	130.0	130.0
36"		130.0	120.0	120.0	130.0	130.0
42"		130.0	120.0	120.0	130.0	130.0
48"		130.0	120.0	120.0	130.0	130.0
54"		130.0	120.0	107.3	130.0	130.0
60"		120.0	120.0	96.5	105.0	105.0
66"		120.0	120.0	87.8	105.0	105.0
72"		120.0	120.0	–	–	–
30"	90"	130.0	100.0	120.0	130.0	130.0
36"		130.0	100.0	120.0	130.0	130.0
42"		130.0	100.0	118.9	130.0	130.0
48"		130.0	100.0	104.0	130.0	130.0
54"		120.0	100.0	92.4	105.0	105.0
60"		120.0	100.0	83.2	105.0	105.0
66"		117.6	–	–	–	81.0
72"		107.8	–	–	–	–
30"	96"	130.0	100.0	120.0	130.0	130.0
36"		130.0	100.0	120.0	130.0	130.0
42"		130.0	100.0	103.4	130.0	130.0
48"		130.0	100.0	90.5	128.7	128.7
54"		120.0	100.0	80.4	105.0	105.0
60"		113.3	100.0	–	102.9	102.9
66"		103.0	–	–	–	–
72"		94.4	–	–	–	–

JAMB & MULLION DESIGN LOAD CAPACITY – PSF
WITH INTERMEDIATE HORIZONTALS

NOMINAL DIMS.		JAMB TYPE 'J1'	JAMB TYPE 'J2'	MULL TYPE 'M1'	MULL TYPE 'M2'	MULL TYPE 'M3'
WIDTH (W)	FRAME HEIGHT	EXT.(+) & INT.(–)	EXT.(+) & INT.(–)	EXT.(+) & INT.(–)	EXT.(+) & INT.(–)	EXT.(+) & INT.(–)
30"	102"	130.0	100.0	120.0	130.0	130.0
36"		130.0	100.0	105.7	130.0	130.0
42"		130.0	100.0	90.6	130.0	130.0
48"		120.0	100.0	79.3	105.0	105.0
54"		111.1	100.0	70.5	101.3	101.3
60"		100.0	–	–	–	–
66"		90.9	–	–	–	–
30"	108"	130.0	100.0	108.7	130.0	130.0
36"		130.0	100.0	90.6	130.0	130.0
42"		127.0	100.0	77.7	115.6	115.6
48"		111.1	100.0	68.0	101.1	101.1
54"		98.8	–	–	–	81.0
60"		88.9	–	–	–	–
30"	114"	130.0	100.0	92.4	130.0	130.0
36"		130.0	100.0	77.0	114.6	114.6
42"		112.7	100.0	66.0	98.2	98.2
48"		98.6	100.0	57.8	86.0	86.0
54"		87.7	–	–	–	–
60"		78.9	–	–	–	–
30"	120"	130.0	100.0	79.3	117.9	117.9
36"		112.8	100.0	66.1	98.3	98.3
42"		96.6	100.0	56.6	84.2	84.2
48"		84.6	100.0	–	73.7	81.0
54"		75.2	–	–	–	–
30"	126"	116.9	100.0	68.5	101.9	101.9
36"		97.4	100.0	57.1	84.9	84.9
42"		83.5	100.0	48.9	72.8	81.0
48"		73.1	–	–	–	81.0
54"		64.9	–	–	–	–
30"	132"	101.7	100.0	59.6	88.6	88.6
36"		84.7	100.0	49.6	73.8	81.0
42"		72.6	89.6	42.5	63.3	81.0
48"		63.5	–	–	–	–

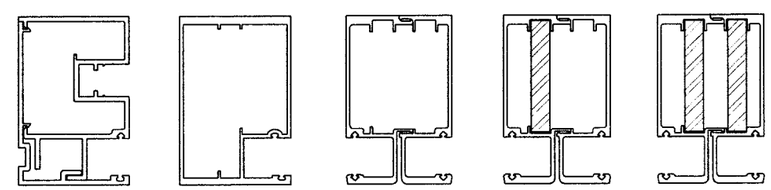

JAMB TYPE 'J1' JAMB TYPE 'J2' MULL TYPE 'M1' MULL TYPE 'M2' MULL TYPE 'M3'

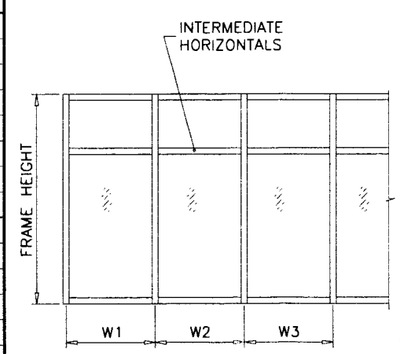

WIDTH (W) = W1
AT FRAME JAMB

WIDTH (W) = $\frac{W2 + W3}{2}$
AT FRAME MULLION

Engr: ARSHAD VIQAR
CIVIL
FLA. PE # 38863
C.A.N. 3538

JUL 1 3 2009

PROD. REVISED
as complying with the Florida
Building Code
Acceptance No 09-0615.03
Expiration Date JUNE 10, 2014
By
Miami Dade Product Control
Division

AL-FAROOQ CORPORATION
ENGINEERS & PRODUCT DEVELOPMENT
1235 S.W. 87 AVE
MIAMI, FLORIDA 33174
TEL. (305) 264-8100 FAX. (305) 262-6978
STORE\W03-46RC

FX-345 ALUM. WINDOW WALL SYSTEM (S.M.I.)

R.C. ALUMINUM INDUSTRIES INC.
2805 N.W. 75 TH AVE.
MIAMI, FL. 33122
TEL. (305) 592-1515 FAX. (305) 592-2184

revisions:

no	date	by	description
C	11.04.05		CHART REV.
D	06.27.06		NO CHANGE THIS SHEET
E	07.16.07		JAMB TYPE 2 REV.
F	05.05.09		UPDATED FOR 2007 FBC
G	07.09.09		NO CHANGE THIS SHEET

date: 06-21-03
scale: 1/2"=1'-0"
dr. by: HAMID
chk. by:

drawing no.
W03-46

sheet 5 of 9

JAMB & MULLION DESIGN LOAD CAPACITY – PSF
WITHOUT INTERMEDIATE HORIZONTALS

NOMINAL DIMS.		JAMB TYPE 'J1'	JAMB TYPE 'J2'	MULL TYPE 'M1'	MULL TYPE 'M2'	MULL TYPE 'M3'
WIDTH (W)	FRAME HEIGHT	EXT.(+) & INT.(–)	EXT.(+) & INT.(–)	EXT.(+) & INT.(–)	EXT.(+) & INT.(–)	EXT.(+) & INT.(–)
30"	60"	130.0	120.0	120.0	130.0	130.0
36"		130.0	120.0	120.0	130.0	130.0
42"		130.0	120.0	120.0	130.0	130.0
48"		130.0	120.0	120.0	130.0	130.0
54"		130.0	120.0	120.0	130.0	130.0
60"		130.0	120.0	120.0	130.0	130.0
66"		130.0	120.0	120.0	130.0	130.0
72"		130.0	120.0	120.0	130.0	130.0
30"	66"	130.0	120.0	120.0	130.0	130.0
36"		130.0	120.0	120.0	130.0	130.0
42"		130.0	120.0	120.0	130.0	130.0
48"		130.0	120.0	120.0	130.0	130.0
54"		130.0	120.0	120.0	130.0	130.0
60"		130.0	120.0	120.0	130.0	130.0
66"		130.0	120.0	120.0	130.0	130.0
72"		120.0	120.0	120.0	120.0	120.0
30"	72"	130.0	120.0	120.0	130.0	130.0
36"		130.0	120.0	120.0	130.0	130.0
42"		130.0	120.0	120.0	130.0	130.0
48"		130.0	120.0	120.0	130.0	130.0
54"		130.0	120.0	120.0	130.0	130.0
60"		130.0	120.0	120.0	130.0	130.0
66"		120.0	120.0	120.0	120.0	120.0
72"		120.0	120.0	120.0	120.0	120.0
30"	78"	130.0	120.0	120.0	130.0	130.0
36"		130.0	120.0	120.0	130.0	130.0
42"		130.0	120.0	120.0	130.0	130.0
48"		130.0	120.0	120.0	130.0	130.0
54"		130.0	120.0	120.0	130.0	130.0
60"		130.0	120.0	120.0	130.0	130.0
66"		120.0	120.0	120.0	120.0	120.0
72"		120.0	120.0	–	105.0	105.0
30"	84"	130.0	120.0	120.0	130.0	130.0
36"		130.0	120.0	120.0	130.0	130.0
42"		130.0	120.0	120.0	130.0	130.0
48"		130.0	120.0	120.0	130.0	130.0
54"		130.0	120.0	120.0	130.0	130.0
60"		120.0	120.0	116.2	116.2	116.2
66"		120.0	120.0	110.4	110.4	110.4
72"		120.0	120.0	–	–	–
30"	90"	130.0	100.0	120.0	130.0	130.0
36"		130.0	100.0	120.0	130.0	130.0
42"		130.0	100.0	120.0	130.0	130.0
48"		130.0	100.0	114.6	130.0	130.0
54"		120.0	100.0	104.8	105.0	105.0
60"		120.0	100.0	97.5	105.0	105.0
66"		120.0	–	–	–	81.0
72"		120.0	–	–	–	–
30"	96"	130.0	100.0	120.0	130.0	130.0
36"		130.0	100.0	120.0	130.0	130.0
42"		130.0	100.0	110.2	130.0	130.0
48"		130.0	100.0	98.5	130.0	130.0
54"		120.0	100.0	89.7	105.0	105.0
60"		120.0	100.0	–	105.0	105.0
66"		120.0	–	–	–	–
72"		116.1	–	–	–	–

JAMB & MULLION DESIGN LOAD CAPACITY – PSF
WITHOUT INTERMEDIATE HORIZONTALS

NOMINAL DIMS.		JAMB TYPE 'J1'	JAMB TYPE 'J2'	MULL TYPE 'M1'	MULL TYPE 'M2'	MULL TYPE 'M3'
WIDTH (W)	FRAME HEIGHT	EXT.(+) & INT.(–)	EXT.(+) & INT.(–)	EXT.(+) & INT.(–)	EXT.(+) & INT.(–)	EXT.(+) & INT.(–)
30"	102"	130.0	100.0	120.0	130.0	130.0
36"		130.0	100.0	110.2	130.0	130.0
42"		130.0	100.0	95.9	130.0	130.0
48"		120.0	100.0	85.5	105.0	105.0
54"		120.0	100.0	77.6	105.0	105.0
60"		112.8	–	–	–	–
66"		105.4	–	–	–	–
30"	108"	130.0	100.0	111.9	130.0	130.0
36"		130.0	100.0	94.5	130.0	130.0
42"		130.0	100.0	82.4	122.2	122.2
48"		118.7	100.0	73.5	105.0	105.0
54"		107.5	100.0	–	–	81.0
60"		98.8	–	–	–	–
30"	114"	130.0	100.0	94.8	130.0	130.0
36"		130.0	100.0	80.0	119.0	119.0
42"		118.8	100.0	69.6	103.6	103.6
48"		105.4	100.0	62.0	92.2	92.2
54"		95.3	–	–	–	–
60"		87.4	–	–	–	–
30"	120"	130.0	100.0	81.1	120.7	120.7
36"		116.6	100.0	68.3	101.7	101.7
42"		101.3	100.0	59.3	88.3	88.3
48"		90.0	100.0	–	78.5	81.0
54"		81.5	–	–	–	–
30"	126"	119.3	100.0	69.9	104.0	104.0
36"		100.4	100.0	58.8	87.5	87.5
42"		87.1	100.0	51.0	75.9	81.0
48"		77.3	–	–	–	81.0
54"		69.8	–	–	–	–
30"	132"	103.6	100.0	60.7	90.3	90.3
36"		87.1	100.0	51.0	75.9	81.0
42"		75.5	93.1	44.2	65.8	81.0
48"		66.9	–	–	–	–

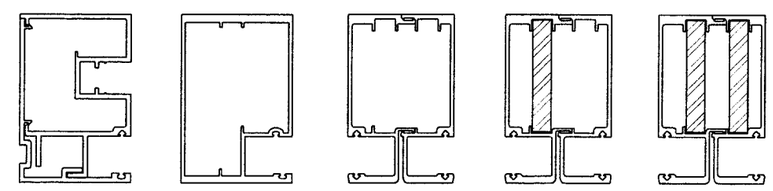

JAMB TYPE 'J1' JAMB TYPE 'J2' MULL TYPE 'M1' MULL TYPE 'M2' MULL TYPE 'M3'

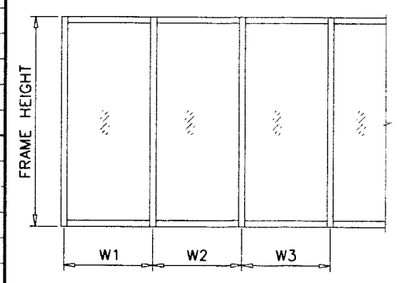

WIDTH (W) = W1
AT FRAME JAMB

WIDTH (W) = $\frac{W2 + W3}{2}$
AT FRAME MULLION

Engr: ARSHAD VIQAR
CIVIL
FLA. PE # 38863
C.A.N. 3538

JUL 1 3 2009

PRODUCT REVISED
is complying with the Florida
Building Code
Acceptance No 09-0615.03
Expiration Date JUNE 10, 2014
By
Miami Dade Product Control
Division

AL-FAROOQ CORPORATION
ENGINEERS & PRODUCT DEVELOPMENT
1235 S.W. 87 AVE
MIAMI, FLORIDA 33174
TEL. (305) 264-8100 FAX. (305) 262-6978
STORE\W03-46RC

FX-345 ALUM. WINDOW WALL SYSTEM (S.M.I.)

R.C. ALUMINUM INDUSTRIES INC.
2805 N.W. 75 TH AVE.
MIAMI, FL. 33122
TEL. (305) 592-1515 FAX. (305) 592-2184

revisions:

no	date	by	description
C	11.04.05		CHART REV.
D	06.27.06		NO CHANGE THIS SHEET
E	07.16.07		JAMB TYPE 2 REV.
F	05.05.09		UPDATED FOR 2007 FBC
G	07.09.09		NO CHANGE THIS SHEET

date: 06-21-03
scale: 1/2"=1'-0"
dr. by: HAMID
chk. by:

drawing no.
W03-46

GLASS LOAD CAPACITY - PSF			
NOMINAL DIMS		GLASS TYPE 'A'	GLASS TYPE 'B'
D.L.O. WIDTH	D.L.O. HEIGHT	EXT.(+) INT.(-)	EXT.(+) INT.(-)
24"	102"	143.0	105.0
27"		143.0	105.0
30"		143.0	105.0
33"		143.0	105.0
36"		143.0	105.0
39"		101.0	105.0
42"		101.0	105.0
45"		101.0	105.0
48"		101.0	105.0
51"		101.0	X
54"		101.0	X
57"		101.0	X
24"	105"	143.0	105.0
27"		143.0	105.0
30"		143.0	105.0
33"		143.0	105.0
36"		143.0	105.0
39"		101.0	105.0
42"		101.0	105.0
45"		101.0	105.0
48"		101.0	105.0
51"		101.0	X
54"		101.0	X
57"		101.0	X
24"	108"	143.0	105.0
27"		143.0	105.0
30"		143.0	105.0
33"		143.0	105.0
36"		101.0	105.0
39"		101.0	105.0
42"		101.0	105.0
45"		101.0	105.0
48"		101.0	X
51"		101.0	X
54"		101.0	X
24"	111"	143.0	105.0
27"		143.0	105.0
30"		143.0	105.0
33"		143.0	105.0
36"		101.0	105.0
39"		101.0	105.0
42"		101.0	105.0
45"		101.0	105.0
48"		101.0	X
51"		101.0	X
54"		101.0	X

GLASS LOAD CAPACITY - PSF			
NOMINAL DIMS		GLASS TYPE 'A'	GLASS TYPE 'B'
D.L.O. WIDTH	D.L.O. HEIGHT	EXT.(+) INT.(-)	EXT.(+) INT.(-)
24"	114"	143.0	105.0
27"		143.0	105.0
30"		143.0	105.0
33"		143.0	105.0
36"		101.0	105.0
39"		101.0	105.0
42"		101.0	105.0
45"		101.0	X
48"		101.0	X
51"		101.0	X
24"	117"	143.0	105.0
27"		143.0	105.0
30"		143.0	105.0
33"		143.0	105.0
36"		101.0	105.0
39"		101.0	105.0
42"		101.0	105.0
45"		101.0	X
48"		101.0	X
51"		101.0	X
24"	120"	143.0	105.0
27"		143.0	105.0
30"		143.0	105.0
33"		101.0	105.0
36"		101.0	105.0
39"		101.0	105.0
42"		101.0	X
45"		101.0	X
48"		101.0	X

NOTE:
GLASS CAPACITIES ON THIS SHEET ARE
BASED ON ASTM E1300-02/04 (3 SEC. GUSTS).

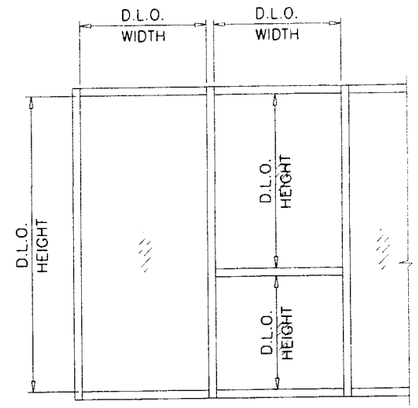

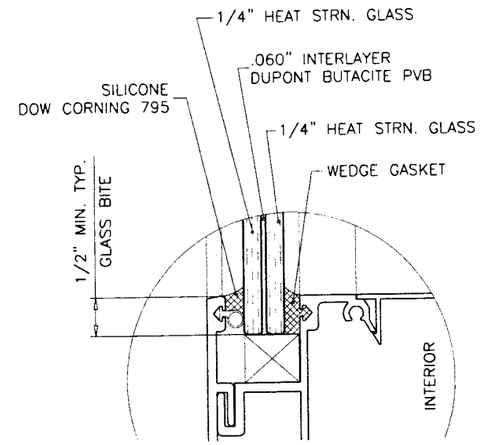

GLASS TYPE 'A'

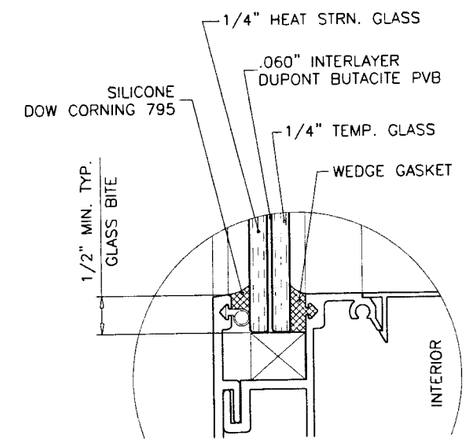

GLASS TYPE 'B'

GLAZING OPTIONS

Engr: ARSHAD VIQAR
CIVIL
FLA. PE # 38863
C.A.N. 3538

JUL 1 3 2009

PRODUCT REVISED
as complying with the Florida
Building Code
Acceptance No 09-0615.03
Expiration Date JUNE 10, 2014
By
Miami Dade Product Control
Division

AL-FAROOQ CORPORATION
ENGINEERS & PRODUCT DEVELOPMENT
1235 S.W. 87 AVE
MIAMI, FLORIDA 33174
TEL. (305) 264-8100 FAX. (305) 262-6978
STORE\W03-46RC

FX-345 ALUM. WINDOW WALL SYSTEM (S.M.I.)

R.C. ALUMINUM INDUSTRIES INC.
2805 N.W. 75 TH AVE.
MIAMI, FL. 33122
TEL. (305) 592-1515 FAX. (305) 592-2184

revisions:

no	date	by	description
C	11.04.05		CHART REV.
D	06.27.06		NO CHANGE THIS SHEET
E	07.16.07		NOTE ADDED
F	05.05.09		UPDATED FOR 2007 FBC
G	07.09.09		NO CHANGE THIS SHEET

date: 06-21-03
scale: 1/2"=1'-0"
dr. by: HAMID
chk. by:

drawing no.
W03-46

sheet 3 of 9

GLASS LOAD CAPACITY - PSF			
NOMINAL DIMS		GLASS TYPE 'A'	GLASS TYPE 'B'
D.L.O. WIDTH	D.L.O. HEIGHT	EXT.(+) INT.(-)	EXT.(+) INT.(-)
24"	60"	143.0	105.0
27"		143.0	105.0
30"		143.0	105.0
33"		143.0	105.0
36"		143.0	105.0
39"		143.0	105.0
42"		143.0	105.0
45"		143.0	105.0
48"		143.0	105.0
51"		143.0	105.0
54"		143.0	105.0
57"		143.0	105.0
60"		143.0	105.0
63"		143.0	105.0
66"		101.0	105.0
69"		101.0	105.0
72"		101.0	105.0
24"	63"	143.0	105.0
27"		143.0	105.0
30"		143.0	105.0
33"		143.0	105.0
36"		143.0	105.0
39"		143.0	105.0
42"		143.0	105.0
45"		143.0	105.0
48"		143.0	105.0
51"		143.0	105.0
54"		143.0	105.0
57"		143.0	105.0
60"		143.0	105.0
63"		101.0	105.0
66"		101.0	105.0
69"		101.0	105.0
72"		101.0	105.0
24"	66"	143.0	105.0
27"		143.0	105.0
30"		143.0	105.0
33"		143.0	105.0
36"		143.0	105.0
39"		143.0	105.0
42"		143.0	105.0
45"		143.0	105.0
48"		143.0	105.0
51"		143.0	105.0
54"		143.0	105.0
57"		143.0	105.0
60"		101.0	105.0
63"		101.0	105.0
66"		101.0	105.0
69"		101.0	105.0
72"		101.0	105.0

GLASS LOAD CAPACITY - PSF			
NOMINAL DIMS		GLASS TYPE 'A'	GLASS TYPE 'B'
D.L.O. WIDTH	D.L.O. HEIGHT	EXT.(+) INT.(-)	EXT.(+) INT.(-)
24"	69"	143.0	105.0
27"		143.0	105.0
30"		143.0	105.0
33"		143.0	105.0
36"		143.0	105.0
39"		143.0	105.0
42"		143.0	105.0
45"		143.0	105.0
48"		143.0	105.0
51"		143.0	105.0
54"		143.0	105.0
57"		101.0	105.0
60"		101.0	105.0
63"		101.0	105.0
66"		101.0	105.0
69"		101.0	105.0
72"		101.0	105.0
24"	72"	143.0	105.0
27"		143.0	105.0
30"		143.0	105.0
33"		143.0	105.0
36"		143.0	105.0
39"		143.0	105.0
42"		143.0	105.0
45"		143.0	105.0
48"		143.0	105.0
51"		143.0	105.0
54"		101.0	105.0
57"		101.0	105.0
60"		101.0	105.0
63"		101.0	105.0
66"		101.0	105.0
69"		101.0	105.0
72"		101.0	X
24"	75"	143.0	105.0
27"		143.0	105.0
30"		143.0	105.0
33"		143.0	105.0
36"		143.0	105.0
39"		143.0	105.0
42"		143.0	105.0
45"		143.0	105.0
48"		143.0	105.0
51"		143.0	105.0
54"		101.0	105.0
57"		101.0	105.0
60"		101.0	105.0
63"		101.0	105.0
66"		101.0	105.0
69"		101.0	X
72"		101.0	X

GLASS LOAD CAPACITY - PSF			
NOMINAL DIMS		GLASS TYPE 'A'	GLASS TYPE 'B'
D.L.O. WIDTH	D.L.O. HEIGHT	EXT.(+) INT.(-)	EXT.(+) INT.(-)
24"	78"	143.0	105.0
27"		143.0	105.0
30"		143.0	105.0
33"		143.0	105.0
36"		143.0	105.0
39"		143.0	105.0
42"		143.0	105.0
45"		143.0	105.0
48"		143.0	105.0
51"		101.0	105.0
54"		101.0	105.0
57"		101.0	105.0
60"		101.0	105.0
63"		101.0	105.0
66"		101.0	X
69"		101.0	X
72"		101.0	X
24"	81"	143.0	105.0
27"		143.0	105.0
30"		143.0	105.0
33"		143.0	105.0
36"		143.0	105.0
39"		143.0	105.0
42"		143.0	105.0
45"		143.0	105.0
48"		101.0	105.0
51"		101.0	105.0
54"		101.0	105.0
57"		101.0	105.0
60"		101.0	105.0
63"		101.0	X
66"		101.0	X
69"		101.0	X
72"		101.0	X
24"	84"	143.0	105.0
27"		143.0	105.0
30"		143.0	105.0
33"		143.0	105.0
36"		143.0	105.0
39"		143.0	105.0
42"		143.0	105.0
45"		143.0	105.0
48"		101.0	105.0
51"		101.0	105.0
54"		101.0	105.0
57"		101.0	105.0
60"		101.0	105.0
63"		101.0	X
66"		101.0	X
69"		101.0	X

GLASS LOAD CAPACITY - PSF			
NOMINAL DIMS		GLASS TYPE 'A'	GLASS TYPE 'B'
D.L.O. WIDTH	D.L.O. HEIGHT	EXT.(+) INT.(-)	EXT.(+) INT.(-)
24"	87"	143.0	105.0
27"		143.0	105.0
30"		143.0	105.0
33"		143.0	105.0
36"		143.0	105.0
39"		143.0	105.0
42"		143.0	105.0
45"		101.0	105.0
48"		101.0	105.0
51"		101.0	105.0
54"		101.0	105.0
57"		101.0	105.0
60"		101.0	X
63"		101.0	X
66"		101.0	X
69"		101.0	X
24"	90"	143.0	105.0
27"		143.0	105.0
30"		143.0	105.0
33"		143.0	105.0
36"		143.0	105.0
39"		143.0	105.0
42"		143.0	105.0
45"		101.0	105.0
48"		101.0	105.0
51"		101.0	105.0
54"		101.0	105.0
57"		101.0	X
60"		101.0	X
63"		101.0	X
66"		101.0	X
24"	93"	143.0	105.0
27"		143.0	105.0
30"		143.0	105.0
33"		143.0	105.0
36"		143.0	105.0
39"		143.0	105.0
42"		101.0	105.0
45"		101.0	105.0
48"		101.0	105.0
51"		101.0	105.0
54"		101.0	105.0
57"		101.0	X
60"		101.0	X
63"		101.0	X

GLASS LOAD CAPACITY - PSF			
NOMINAL DIMS		GLASS TYPE 'A'	GLASS TYPE 'B'
D.L.O. WIDTH	D.L.O. HEIGHT	EXT.(+) INT.(-)	EXT.(+) INT.(-)
24"	96"	143.0	105.0
27"		143.0	105.0
30"		143.0	105.0
33"		143.0	105.0
36"		143.0	105.0
39"		143.0	105.0
42"		101.0	105.0
45"		101.0	105.0
48"		101.0	105.0
51"		101.0	105.0
54"		101.0	X
57"		101.0	X
60"		101.0	X
24"	99"	143.0	105.0
27"		143.0	105.0
30"		143.0	105.0
33"		143.0	105.0
36"		143.0	105.0
39"		143.0	105.0
42"		101.0	105.0
45"		101.0	105.0
48"		101.0	105.0
51"		101.0	105.0
54"		101.0	X
57"		101.0	X
60"		101.0	X

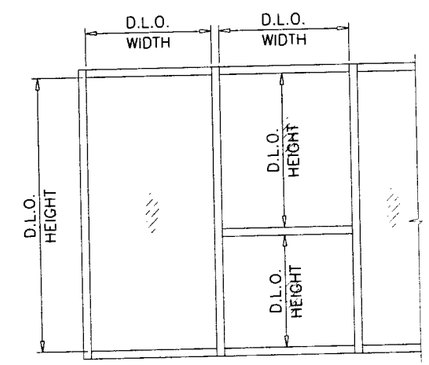

NOTE:
GLASS CAPACITIES ON THIS SHEET ARE BASED ON ASTM E1300-02/04 (3 SEC. GUSTS).

Engr: ARSHAD VIQAR
CIVIL
FLA. PE # 38863
C.A.N. 3538

JUL 13 2009

PRODUCT REVISED
as complying with the Florida Building Code
Acceptance No 09-0615.03
Expiration Date JUNE 10, 2014
By
Miami Dade Product Control Division

AL-FAROOQ CORPORATION
ENGINEERS & PRODUCT DEVELOPMENT
1235 S.W. 87 AVE
MIAMI, FLORIDA 33174
TEL. (305) 264-8100 FAX. (305) 262-6978
STORE\W03-46RC

FX-345 ALUM. WINDOW WALL SYSTEM (S.M.I.)
R.C. ALUMINUM INDUSTRIES INC.
2805 N.W. 75 TH AVE.
MIAMI, FL. 33122
TEL. (305) 592-1515 FAX. (305) 592-2184

revisions:

no	date	by	description
C	11.04.05		CHART REV.
D	06.27.06		NO CHANGE THIS SHEET
E	07.16.07		NOTE ADDED
F	05.05.09		UPDATED FOR 2007 FBC
G	07.09.09		NO CHANGE THIS SHEET

date: 06-21-03
scale: 1/2"=1'-0"
dr. by: HAMID
chk. by:

drawing no.
W03-46

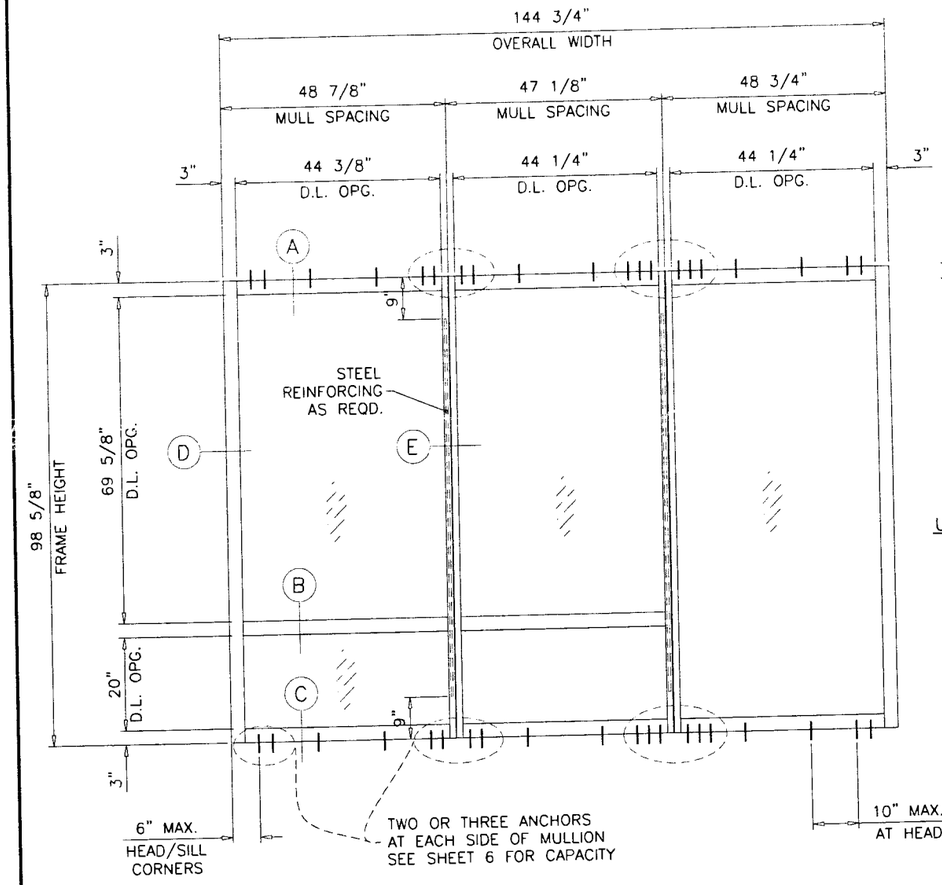

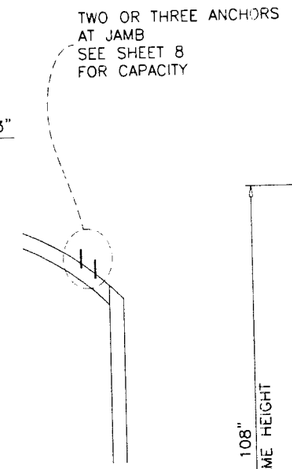

UN-ANCHORED JAMB

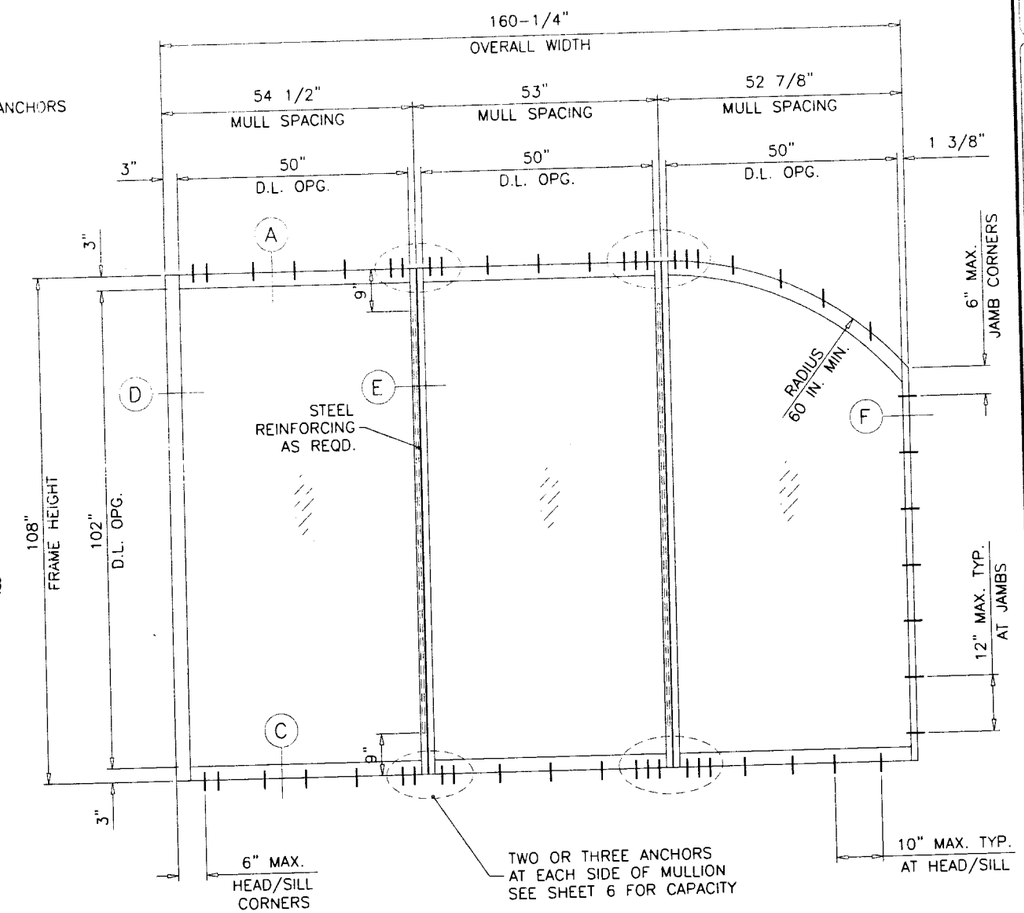

TYPICAL ELEVATIONS
TESTED UNITS

FX-345 ALUM. WINDOW WALL SYSTEM (S.M.I.)

THIS SYSTEM IS RATED FOR SMALL MISSILE IMPACT.

MIAMI-DADE COUNTY APPROVED IMPACT RESISTANT SHUTTERS REQUIRED FOR INSTALLATIONS UP TO 30 FT. OF GRADE. SHUTTERS NOT REQUIRED FOR INSTALLATIONS ABOVE 30 FT. OF GRADE.

CODE REQUIREMENTS FOR SAFEGUARDS MUST BE OBSERVED.

THIS PRODUCT HAS BEEN DESIGNED AND TESTED TO COMPLY WITH THE REQUIREMENTS OF THE FLORIDA BUILDING CODE 2007 EDITION INCLUDING HIGH VELOCITY HURRICANE ZONE (HVHZ).

ANCHORS SHALL BE AS LISTED, SPACED AS SHOWN ON DETAILS, ANCHORS EMBEDMENT TO BASE MATERIAL SHALL BE BEYOND WALL DRESSING OR STUCCO.

ANCHORING OR LOADING CONDITIONS NOT SHOWN IN THESE DETAILS ARE NOT PART OF THIS APPROVAL.

MATERIALS INCLUDING BUT NOT LIMITED TO STEEL/METAL SCREWS, THAT COME INTO CONTACT WITH OTHER DISSIMILAR MATERIALS SHALL MEET THE REQUIREMENTS OF 2007 FLORIDA BLDG. CODE SECTION 2003.8.4.

INSTRUCTIONS:

USE CHARTS AS FOLLOWS.

STEP 1 DETERMINE DESIGN WIND LOAD REQUIREMENT BASED ON WIND VELOCITY, BLDG. HEIGHT, WIND ZONE USING APPLICABLE ASCE 7 STANDARD.

STEP 2 SEE CHARTS ON SHEETS 2 AND 3 FOR DESIGN LOAD CAPACITY OF DESIRED GLASS SIZE.

STEP 3 CHECK MULLION CAPACITY FOR A GIVEN SPACING AND HEIGHT USING CHARTS ON SHEETS 4 & 5 THE CAPACITY SHOULD EXCEED THE DESIGN LOAD.

STEP 4 USING CHART ON SHEET 6 SELECT ANCHOR OPTION WITH DESIGN RATING MORE THAN DESIGN LOAD SPECIFIED IN STEP 1 ABOVE.

STEP 5 FOR CAPACITY OF JAMBS WITH ANCHORS OPTION SEE CHART ON SHEET 8.

STEP 6 THE LOWEST VALUE RESULTING FROM STEPS 2, 3, 4 AND 5 SHALL APPLY TO ENTIRE SYSTEM.

PRODUCT COMPLIES WITH REQUIREMENTS OF ANSI Z97.1.

LAMINATED GLASS
SMALL MISSILE IMPACT

Engr. ARSHAD VIQAR
CIVIL
FLA. PE # 38863
C.A.N. 3538

JUL 1 3 2009

PRODUCT REVISED
as complying with the Florida
Building Code
Acceptance No. 09-0615.03
Expiration Date JUNE 10, 2014
By
Miami Dade Product Control
Division

AL-FAROOQ CORPORATION
ENGINEERS & PRODUCT DEVELOPMENT
1235 S.W. 87 AVE
MIAMI, FLORIDA 33174
TEL. (305) 264-8100 FAX. (305) 262-6978
STORE\W03-46RC

FX-345 ALUM. WINDOW WALL SYSTEM (S.M.I.)

R.C. ALUMINUM INDUSTRIES INC.
2805 N.W. 75 TH AVE.
MIAMI, FL. 33122
TEL. (305) 592-1515 FAX. (305) 592-2184

revisions:

no	date	by	description
C	11.04.05		UPDATED FOR 2004 FBC
D	06.27.06		REV. PER BCCO COMMENTS
E	07.16.07		NOTE ADDED
F	05.05.09		UPDATED FOR 2007 FBC
G	07.09.09		NO CHANGE THIS SHEET

date: 06-21-03
scale: 3/8"=1'-0"
dr. by: HAMID
chk. by:

drawing no.
W03-46