MIAMI-DADE COUNTY
BUILDING CODE COMPLIANCE OFFICE (BCCO)
PRODUCT CONTROL DIVISION

MIAMI-DADE COUNTY, FLORIDA
METRO-DADE FLAGLER BUILDING
140 WEST FLAGLER STREET, SUITE 1603
MIAMI, FLORIDA 33130-1563
(305) 375-2901 FAX (305) 375-2908
www.miamidade.gov/buildingcode

NOTICE OF ACCEPTANCE (NOA)

Horton Automatics Division of Overhead Door
4242 Baldwin Boulevard
Corpus Christi, TX 78405

SCOPE:

This NOA is being issued under the applicable rules and regulations governing the use of construction materials. The documentation submitted has been reviewed by Miami-Dade County Product Control Division and accepted by the Board of Rules and Appeals (BORA) to be used in Miami Dade County and other areas where allowed by the Authority Having Jurisdiction (AHJ).

This NOA shall not be valid after the expiration date stated below. The Miami-Dade County Product Control Division (In Miami Dade County) and/or the AHJ (in areas other than Miami Dade County) reserve the right to have this product or material tested for quality assurance purposes. If this product or material fails to perform in the accepted manner, the manufacturer will incur the expense of such testing and the AHJ may immediately revoke, modify, or suspend the use of such product or material within their jurisdiction. BORA reserves the right to revoke this acceptance, if it is determined by Miami-Dade County Product Control Division that this product or material fails to meet the requirements of the applicable building code.

This product is approved as described herein, and has been designed to comply with the Florida Building Code, including the High Velocity Hurricane Zone.

DESCRIPTION: Series "110 & 310 "(O-Sx-Sx-O & So-Sx-Sx-So) Aluminum Automatic Sliding Door w/ Breakout-LMI

APPROVAL DOCUMENT: Drawing No. **040302-L**, titled "Series 110/310 Large Missile Impact", sheets 1 through 8 of 8, prepared by manufacturer, dated 12/04/09 and last revised on 02-01-10, signed and sealed by John E. Scates, P.E., bearing the Miami-Dade County Product Control Renewal stamp with the Notice of Acceptance number and expiration date by the Miami-Dade County Product Control Division.

MISSILE IMPACT RATING: Large Missile Impact

1. Not approved where water infiltration is required.
2. Series 310 (So-Sx-Sx-So) with AR panic device are limited to Dp=+/- 45 psf and max 168" X 96" size.
3. Anchors referenced at Equal spacing must not exceed 9.0" unless otherwise noted.

LABELING: Each unit shall bear a permanent label with the manufacturer's name or logo, city, state and following statement: "Miami-Dade County Product Control Approved", unless otherwise noted herein.

RENEWAL of this NOA shall be considered after a renewal application has been filed and there has been no change in the applicable building code negatively affecting the performance of this product.

TERMINATION of this NOA will occur after the expiration date or if there has been a revision or change in the materials, use, and/or manufacture of the product or process. Misuse of this NOA as an endorsement of any product, for sales, advertising or any other purposes shall automatically terminate this NOA. Failure to comply with any section of this NOA shall be cause for termination and removal of NOA.

ADVERTISEMENT: The NOA number preceded by the words Miami-Dade County, Florida, and followed by the expiration date may be displayed in advertising literature. If any portion of the NOA is displayed, then it shall be done in its entirety.

INSPECTION: A copy of this entire NOA shall be provided to the user by the manufacturer or its distributors and shall be available for inspection at the job site at the request of the Building Official.

This NOA **revises & renews # 04-0406.01** consists of this page 1 and evidence pages E-1 as well as approval document mentioned above.

The submitted documentation was reviewed by **Ishaq I. Chanda, P.E.**

MIAMI-DADE COUNTY APPROVED

2/3/10

Horton Automatics Division of Overhead Door

NOTICE OF ACCEPTANCE: EVIDENCE SUBMITTED

A. DRAWINGS

1. Manufacturer's die drawings and sections.
2. Drawing No. **040302-L**, titled "Series 110/310 Large Missile Impact", sheets 1 through 8 of 8, prepared by manufacturer, dated 12/04/09 and last revised on 02-01-10, signed and sealed by John E. Scates, P.E.

B. TESTS

1. Test reports on 1) Air Infiltration Test, per FBC, TAS 202-94
   2) Uniform Static Air Pressure Test, per FBC, TAS 202-94
   3) Water Resistance Test, per FBC, TAS 202-94 (Not Performed)
   4) Large Missile Impact Test per FBC, TAS 201-94
   5) Cyclic Wind Pressure Loading per FBC, TAS 203-94
   6) Forced Entry Test, per FBC 2411 3.2.1 and TAS 202-94

   along with installation diagram of aluminum automatic sliding glass doors, prepared by Hurricane Testing Laboratories, Test Report No(s) **HTL- 0322-0908-03,** dated 10/16/03, **HTL-0322-0611-03** and **0322-0119-04** both dated 06/12/03-1/16/04, all signed and sealed by Vinu J. Abraham, P.E.

C. CALCULATIONS:

1. Anchor verification calculations and structural analysis dated 06/03/09 and last revised on 12/04/09, prepared, signed and sealed by John E. Scates, P.E.
2. Glazing complies w/ ASTME-1300-02 & 04

D. QUALITY ASSURANCE BY

1. Miami Dade building Code Compliance Office (BCCO).

E. MATERIAL CERTIFICATIONS

1. Notice of Acceptance No. **09-1228.05** issued to E.I. DuPont DeNemours for" Dupont Spallshield 457 Interlayer(Former Sentry Glass ® 457)", expiring on 01/13/2011.

F. STATEMENTS

1. Statement letter of conformance & "No financial interest", dated 02/01/10 & 02/02/2010 respectively, signed & sealed by John E. Scates, P.E.
2. Statement letter of compliance, part of above test report.

G. OTHER

1. This NOA **revises & renews # 04-0406.01,** expired on July 15, 2009.

Ishaq I. Chanda

Ishaq I. Chanda, P.E.
Product Control Examiner
NOA No 09-0624.04
Expiration Date: July 15, 2014
Approval Date: February 24, 2010

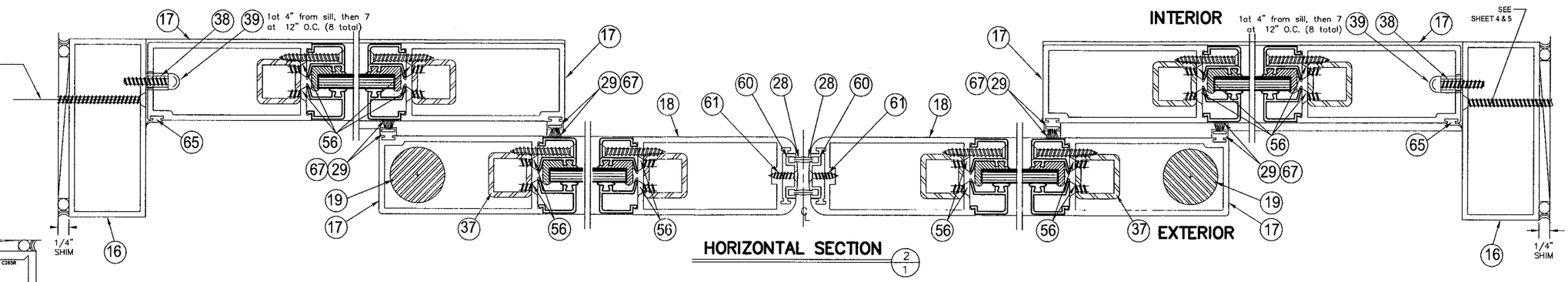

HORIZONTAL SECTION 2/1

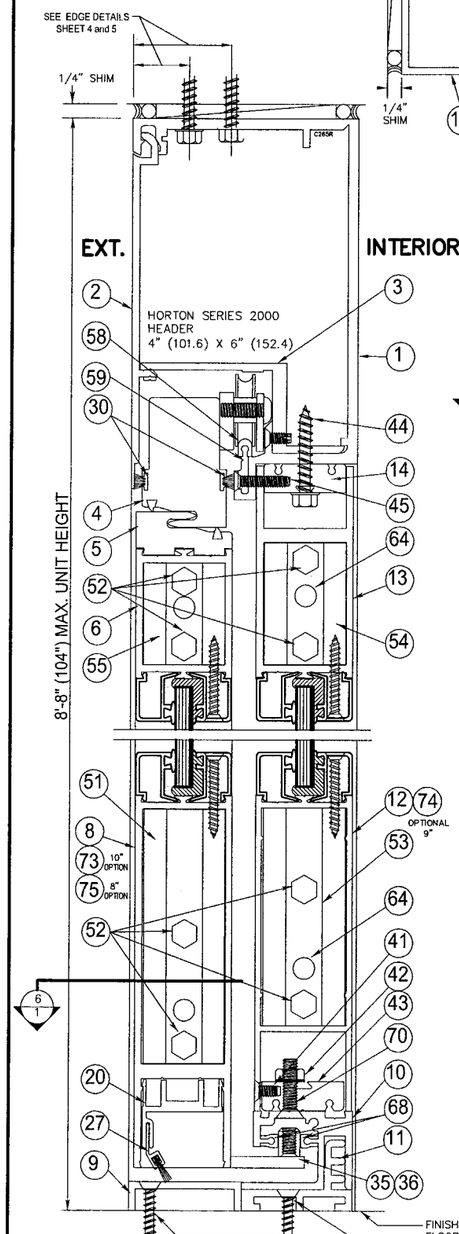

VERTICAL SECTION 1/1
DOOR SHOWN IN OPEN POSITION

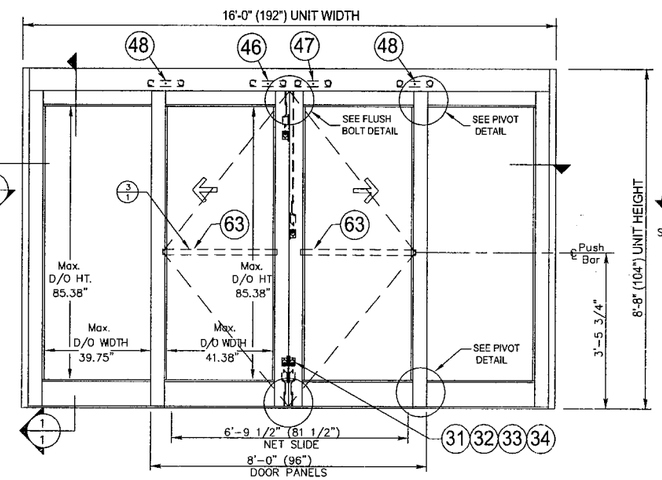

EXTERIOR ELEVATION 4/1
(0-SX-SX-0)

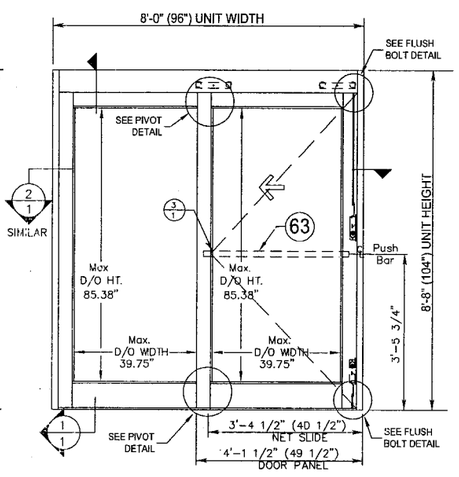

EXTERIOR ELEVATION 6/1
(0-SX) SHOWN, & (SX-0)

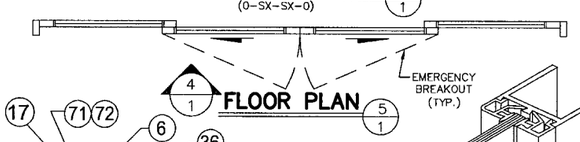

FLOOR PLAN 5/1

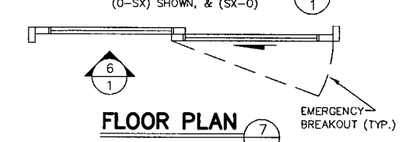

FLOOR PLAN 7/1

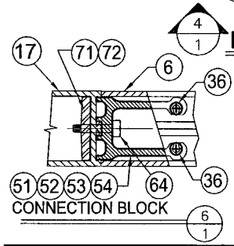

CONNECTION BLOCK 6/1

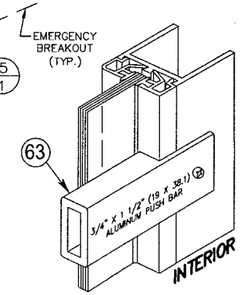

FIXED PUSH BAR DETAIL 3/1

NOTE:
For fastener location and type see sheets 4 & 5
The allowable 4/3 increase stress factor for wind loads was not used in the anchor calculations for determining the minimum required anchor quantities shown on these drawings

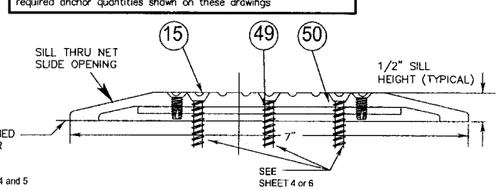

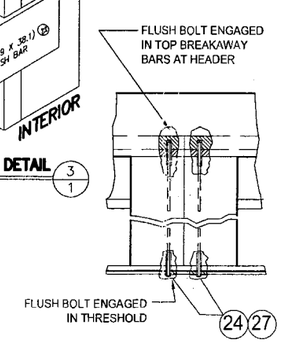

FLUSH BOLT DETAIL

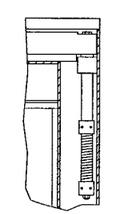

"SX" PANEL TOP PIVOT

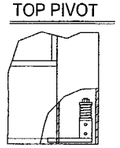

"SX" PANEL BTM. PIVOT

For Header, Sill, & Jambs – Fastener must penetrate wood & extend 1.5" minimum into substrate.

Head to Jamb Steel Angles (Top – 2.25" X 0.63" X 0.13"; Bottom – 0.94" X 0.63" X 0.13") secured to jamb with 3.688" X 6" X 1/4" Alum. Tapping Plate & 2 ea. #1/4–20 X 5/8" SCS. The head is secured to the angles with 3 ea. #1/4–20 X 1/2" FHMS (2 @ top; 1 @ bottom).

ALL STRUCTURAL ALUMINUM MEMBERS ARE 6063–T5 ALLOY.
TYPICAL THICKNESS = 1/8", UNLESS INDICATED OTHERWISE
TYPICAL PANEL THICKNESS = 1 3/4"

The frame must be shimmed with a type of shim complying with the Florida Building Code and is capable of resisting the frame's rotation.

WEATHERSEALS:

C389–FL	INTERLOCK SEAL	SCHLEGEL CORP. FINSEAL	#7595–6011–0
C350	NOSING SEAL	SCHLEGEL CORP. SKIRTING	SEAL#1104–5101
C524–FL	SLIDE PANEL BOTTOM SEAL	FELTON NYLON BRISTLE	#490621
C293	SLIDE PANEL TOP SEAL	SCHLEGEL	#8430–5016–7

HARDWARE:

C454	MAX SECURITY LOCK	ADAMS–RITE #MS1850S–250–628
C463	THUMBTURN	ADAMS–RITE #4066
C487	EXIT INDICATOR	ADAMS–RITE #4089
C883	THRESHOLD BOLT	ADAMS–RITE #4015
C815–RFL, C817–FL, C2130–1FL		SLIDE TOP ROLLER ASSEMBLIES
C843–1FL & C844–1FL BOTTOM GUIDES		

Available Unit Sizes:
8'0"W X 7'6"H Min size (0–SX) & (SX–0)
16'0"W X 8'8"H Max size (0–SX–SX–0)

Maximum Daylight Openings:
Operable Panel: 40.63"W X 85.5"H
Fixed Panel: 39.75"W X 85.187"H

Panel Width nom. door	Net Slide opening
1@48"=48"	40 1/2"
2@48"=96"	81 1/2"

Door Panel Sizes:	"O" Panel	"SX" Panel
(W x H)	41.88" x 82.19"	42.88" x 81.75"

	Where Water Infiltration Requirement is needed	Where Water Infiltration Requirement is NOT needed
Positive	Not Approved	± 55 PSF
Negative	Not Approved	± 55 PSF

Electrical/electronic functions are not part of this approval and must be reviewed by appropriate building official

16' x 8'-8" (192"x104") (O-SX-SX-O)
8' x 8'-8" (96"x104") (O-SX , SX-O)
Series 110 Large Missile Impact

* 1/4" Tempered Glass – DuPont SentryGlas 457 Laminate consists of 0.045" Polyvinyl Butyral and 0.0007" of PET with an abrasion resistant hard coat
* Interior wet glazed with Dow Corning 995 using glazing bead (0.848" x 0.621) without vinyl wedge. The glazing bead on the interior side operable & fixed panels fastened to the rails & stiles with a #10 x 1.5" FHSMS 4" from each end and 12" on center.
* Exterior side snap–in glazing bead with vinyl wedge
* Minimum glass bite 9/16"

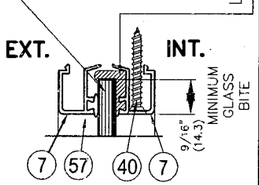

GLAZING DETAIL

JOHN E. SCATES, P.E.
3121 FAIRGATE DR.
CARROLLTON, TX 75007
FL P.E 51737

John E. Scates 2/1/2010

PRODUCT RENEWED
as complying with the Florida Building Code
Acceptance No 09-0624.04
Expiration Date July 15, 2014
By Ishaq I. Hussain
Miami Dade Product Control Division

NO.	REVISIONS DESCRIPTION	DATE
1	REVISED PER METRO DADE MARK–UPS	12/04/09
2		
3		
4		
5		
6		
7		
8		

ARCHITECT:
CONTRACTOR:
SERIES: 2001/110 | TYPE: "0-SX-SX-0", "O-SX" & "SX-O"
STILE: MEDIUM | FINISH:
ACTUATION:

Dwg. No. 040302-L

Horton AUTOMATICS
A DIVISION OF OVERHEAD DOOR CORP.
4242 BALDWIN BOULEVARD
CORPUS CHRISTI, TEXAS 78405-3399
361-888-5591 1-800-531-3111
FAX: 361-888-6510, 1-800-531-3108

JOB METRO–DADE
LOCATION:
DISTRIBUTOR:
DWN: LRod | P.O. # | SHEET 1 of 8
CHK: J. LACKEY | DATE 3–02–04 | REVISION 1

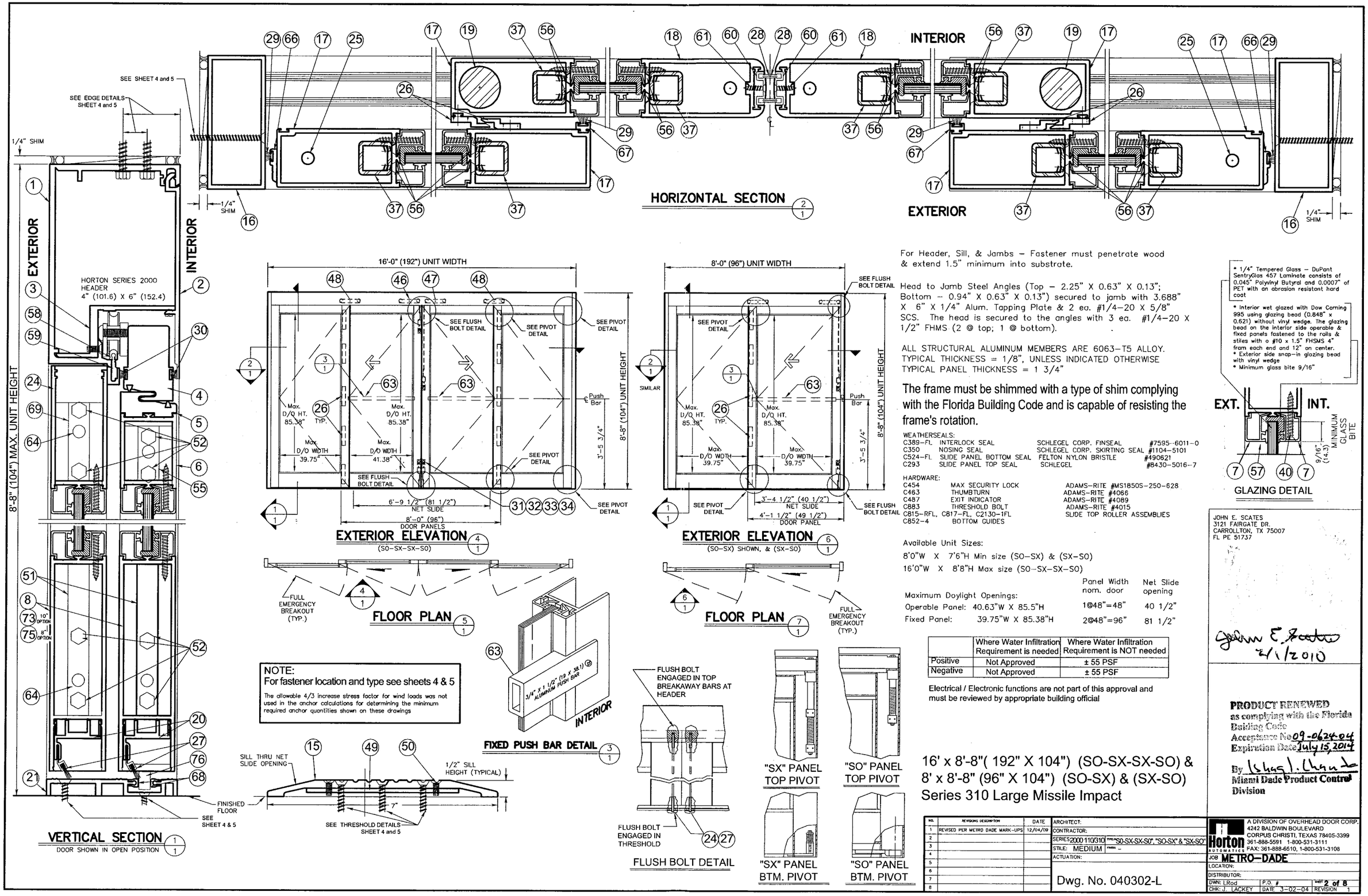

NOTE:
For fastener location and type see sheets 4 & 5

The allowable 4/3 increase stress factor for wind loads was not used in the anchor calculations for determining the minimum required anchor quantities shown on these drawings

For Header, Sill, & Jambs – Fastener must penetrate wood & extend 1.5" minimum into substrate.

Head to Jamb Steel Angles (Top – 2.25" X 0.63" X 0.13"; Bottom – 0.94" X 0.63" X 0.13") secured to jamb with 3.688" X 6" X 1/4" Alum. Tapping Plate & 2 ea. #1/4–20 X 5/8" SCS. The head is secured to the angles with 3 ea. #1/4–20 X 1/2" FHMS (2 @ top; 1 @ bottom).

ALL STRUCTURAL ALUMINUM MEMBERS ARE 6063–T5 ALLOY.
TYPICAL THICKNESS = 1/8", UNLESS INDICATED OTHERWISE
TYPICAL PANEL THICKNESS = 1 3/4"

The frame must be shimmed with a type of shim complying with the Florida Building Code and is capable of resisting the frame's rotation.

WEATHERSEALS:

C389–FL	INTERLOCK SEAL	SCHLEGEL CORP. FINSEAL	#7595–6011–0
C350	NOSING SEAL	SCHLEGEL CORP. SKIRTING SEAL	#1104–5101
C524–FL	SLIDE PANEL BOTTOM SEAL	FELTON NYLON BRISTLE	#490621
C293	SLIDE PANEL TOP SEAL	SCHLEGEL	#8430–5016–7

HARDWARE:

C454	MAX SECURITY LOCK	ADAMS–RITE #MS1850S–250–628
C463	THUMBTURN	ADAMS–RITE #4066
C487	EXIT INDICATOR	ADAMS–RITE #4089
C883	THRESHOLD BOLT	ADAMS–RITE #4015
C815–RFL, C817–FL, C2130–1FL		SLIDE TOP ROLLER ASSEMBLIES
C852–4	BOTTOM GUIDES	

Available Unit Sizes:
8'0"W X 7'6"H Min size (SO–SX) & (SX–SO)
16'0"W X 8'8"H Max size (SO–SX–SX–SO)

Maximum Doylight Openings:		Panel Width nom. door	Net Slide opening
Operable Panel:	40.63"W X 85.5"H	1@48"=48"	40 1/2"
Fixed Panel:	39.75"W X 85.38"H	2@48"=96"	81 1/2"

	Where Water Infiltration Requirement is needed	Where Water Infiltration Requirement is NOT needed
Positive	Not Approved	± 55 PSF
Negative	Not Approved	± 55 PSF

Electrical / Electronic functions are not part of this approval and must be reviewed by appropriate building official

16' x 8'-8"(192" X 104") (SO-SX-SX-SO) &
8' x 8'-8" (96" X 104") (SO-SX) & (SX-SO)
Series 310 Large Missile Impact

* 1/4" Tempered Glass – DuPont SentryGlas 457 Laminate consists of 0.045" Polyvinyl Butyral and 0.0007" of PET with an abrasion resistant hard coat
* Interior wet glazed with Dow Corning 995 using glazing bead (0.848" x 0.621) without vinyl wedge. The glazing bead on the interior side operable & fixed panels fastened to the rails & stiles with a #10 x 1.5" FHSMS 4" from each end and 12" on center.
* Exterior side snap–in glazing bead with vinyl wedge
* Minimum glass bite 9/16"

EXT. INT. MINIMUM GLASS BITE 9/16" (14.3)
7 57 40 7
GLAZING DETAIL

JOHN E. SCATES
3121 FAIRGATE DR.
CARROLLTON, TX 75007
FL PE 51737

John E. Scates
2/1/2010

PRODUCT RENEWED
as complying with the Florida Building Code
Acceptance No. 09-0624.04
Expiration Date July 15, 2014
By Ishaq I. Chanda
Miami Dade Product Control Division

NO.	REVISIONS DESCRIPTION	DATE
1	REVISED PER METRO DADE MARK-UPS	12/04/09
2		
3		
4		
5		
6		
7		
8		

ARCHITECT:
CONTRACTOR:
SERIES: 2000 110310 TYPE: "SO-SX-SX-SO", "SO-SX" & "SX-SO"
STILE: MEDIUM FINISH: –
ACTUATION:

Dwg. No. 040302-L

Horton AUTOMATICS
A DIVISION OF OVERHEAD DOOR CORP.
4242 BALDWIN BOULEVARD
CORPUS CHRISTI, TEXAS 78405-3399
361-888-5591 1-800-531-3111
FAX: 361-888-6510, 1-800-531-3108

JOB: METRO–DADE
LOCATION:
DISTRIBUTOR:
DWN: L.Rod | P.O. # | SHEET 2 of 8
CHK: J. LACKEY | DATE 3–02–04 | REVISION 1

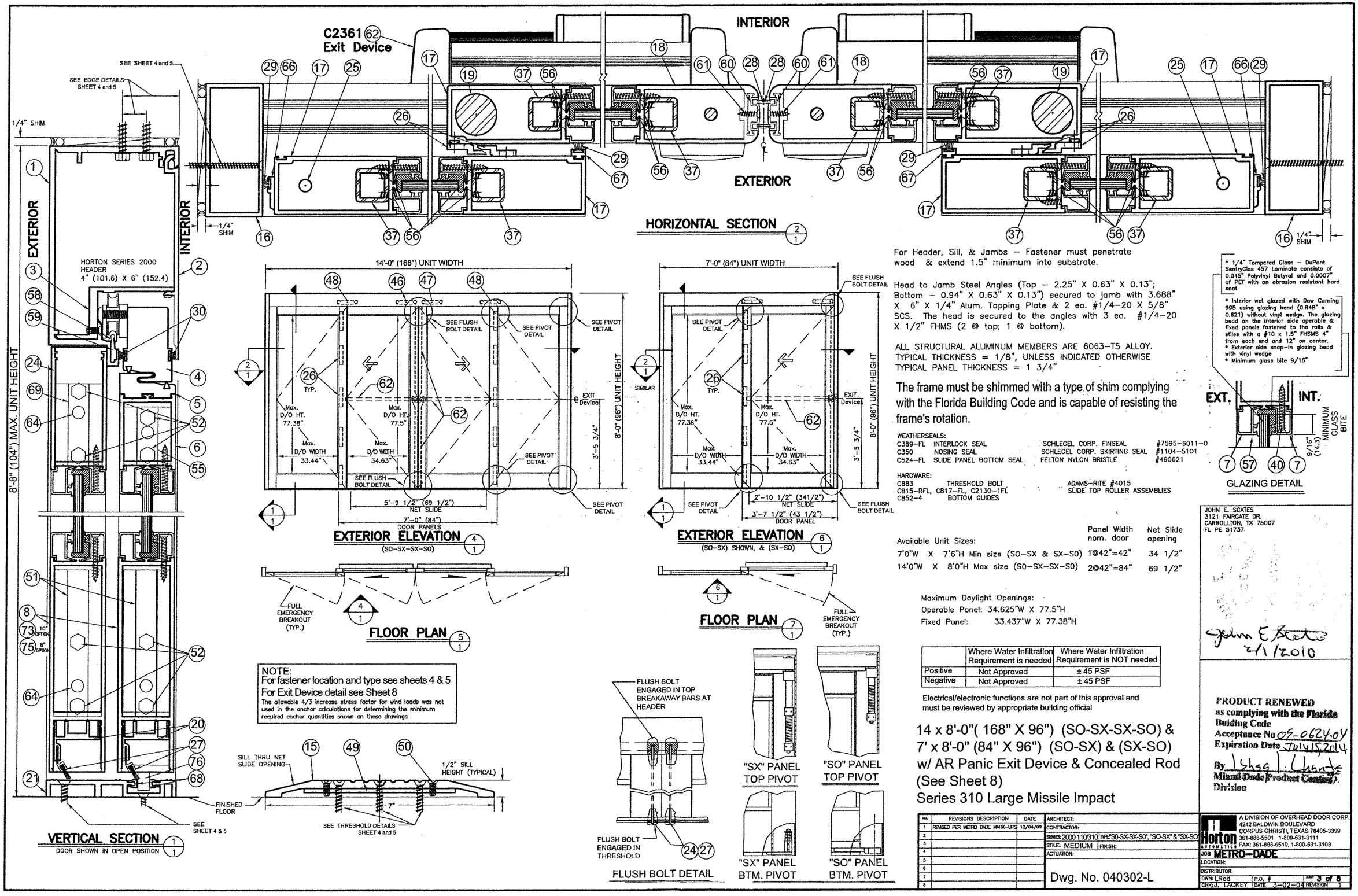

NOTE:
For fastener location and type see sheets 4 & 5
For Exit Device detail see Sheet 8
The allowable 4/3 increase stress factor for wind loads was not used in the anchor calculations for determining the minimum required anchor quantities shown on these drawings

For Header, Sill, & Jambs – Fastener must penetrate wood & extend 1.5" minimum into substrate.

Head to Jamb Steel Angles (Top – 2.25" X 0.63" X 0.13"; Bottom – 0.94" X 0.63" X 0.13") secured to jamb with 3.688" X 6" X 1/4" Alum. Tapping Plate & 2 ea. #1/4–20 X 5/8" SCS. The head is secured to the angles with 3 ea. #1/4–20 X 1/2" FHMS (2 @ top; 1 @ bottom).

ALL STRUCTURAL ALUMINUM MEMBERS ARE 6063–T5 ALLOY.
TYPICAL THICKNESS = 1/8", UNLESS INDICATED OTHERWISE
TYPICAL PANEL THICKNESS = 1 3/4"

The frame must be shimmed with a type of shim complying with the Florida Building Code and is capable of resisting the frame's rotation.

WEATHERSEALS:

C389–FL	INTERLOCK SEAL	SCHLEGEL CORP. FINSEAL	#7595–6011–0
C350	NOSING SEAL	SCHLEGEL CORP. SKIRTING SEAL	#1104–5101
C524–FL	SLIDE PANEL BOTTOM SEAL	FELTON NYLON BRISTLE	#490621

HARDWARE:

C883	THRESHOLD BOLT	ADAMS–RITE #4015
C815–RFL, C817–FL, C2130–1FL		SLIDE TOP ROLLER ASSEMBLIES
C852–4	BOTTOM GUIDES	

Available Unit Sizes:

		Panel Width nom. door	Net Slide opening
7'0"W X 7'6"H Min size (SO–SX & SX–SO)		1@42"=42"	34 1/2"
14'0"W X 8'0"H Max size (SO–SX–SX–SO)		2@42"=84"	69 1/2"

Maximum Daylight Openings:
Operable Panel: 34.625"W X 77.5"H
Fixed Panel: 33.437"W X 77.38"H

	Where Water Infiltration Requirement is needed	Where Water Infiltration Requirement is NOT needed
Positive	Not Approved	± 45 PSF
Negative	Not Approved	± 45 PSF

Electrical/electronic functions are not part of this approval and must be reviewed by appropriate building official

14 x 8'-0"(168" X 96") (SO-SX-SX-SO) &
7' x 8'-0" (84" X 96") (SO-SX) & (SX-SO)
w/ AR Panic Exit Device & Concealed Rod
(See Sheet 8)
Series 310 Large Missile Impact

* 1/4" Tempered Glass – DuPont SentryGlas 457 Laminate consists of 0.045" Polyvinyl Butyral and 0.0007" of PET with an abrasion resistant hard coat
* Interior wet glazed with Dow Corning 995 using glazing bead (0.848" x 0.621) without vinyl wedge. The glazing bead on the interior side operable & fixed panels fastened to the rails & stiles with a #10 x 1.5" FHSMS 4" from each end and 12" on center.
* Exterior side snap–in glazing bead with vinyl wedge
* Minimum glass bite 9/16"

GLAZING DETAIL

JOHN E. SCATES
3121 FAIRGATE DR.
CARROLLTON, TX 75007
FL PE 51737

John E Scates
2/1/2010

PRODUCT RENEWED
as complying with the Florida Building Code
Acceptance No OE-0624.04
Expiration Date July 15, 2014
By Miami-Dade Product Control Division

NO.	REVISIONS DESCRIPTION	DATE
1	REVISED PER METRO DADE MARK-UPS	12/04/09
2		
3		
4		
5		
6		
7		
8		

ARCHITECT:
CONTRACTOR:
SERIES: 2000 110/310 TYPE: "SO-SX-SX-SO", "SO-SX" & "SX-SO"
STILE: MEDIUM FINISH:
ACTUATION:

Dwg. No. 040302-L

Horton AUTOMATICS
A DIVISION OF OVERHEAD DOOR CORP.
4242 BALDWIN BOULEVARD
CORPUS CHRISTI, TEXAS 78405-3399
361-888-5591 1-800-531-3111
FAX: 361-888-6510, 1-800-531-3108

JOB METRO–DADE
LOCATION:
DISTRIBUTOR:
DWN: LRod | P.O. # | REV 3 of 8
CHK: J. LACKEY | DATE 3–02–04 | REVISION 1

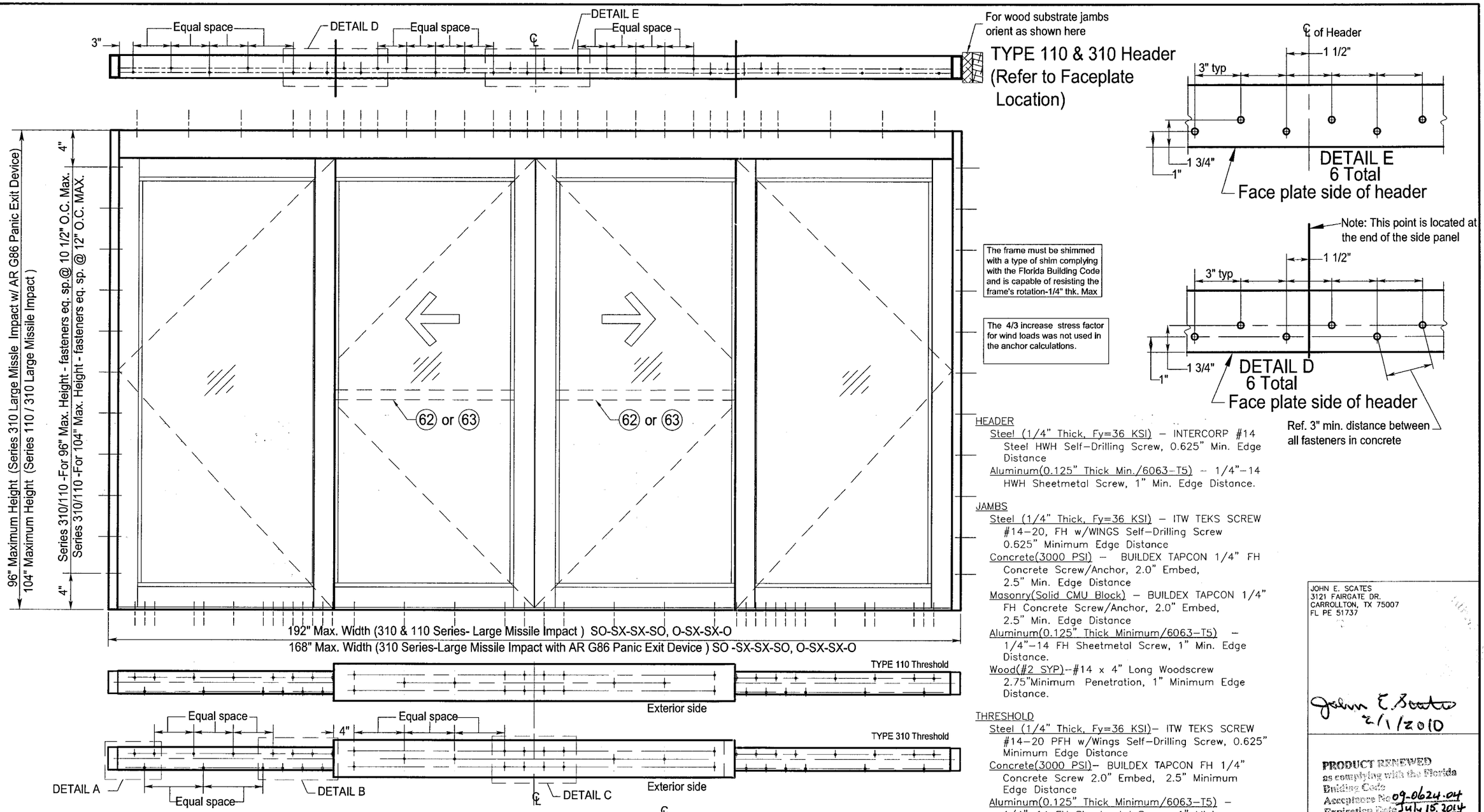

The frame must be shimmed with a type of shim complying with the Florida Building Code and is capable of resisting the frame's rotation-1/4" thk. Max

The 4/3 increase stress factor for wind loads was not used in the anchor calculations.

HEADER

Steel (1/4" Thick, Fy=36 KSI) – INTERCORP #14 Steel HWH Self–Drilling Screw, 0.625" Min. Edge Distance

Aluminum(0.125" Thick Min./6063–T5) – 1/4"–14 HWH Sheetmetal Screw, 1" Min. Edge Distance.

JAMBS

Steel (1/4" Thick, Fy=36 KSI) – ITW TEKS SCREW #14–20, FH w/WINGS Self–Drilling Screw 0.625" Minimum Edge Distance

Concrete(3000 PSI) – BUILDEX TAPCON 1/4" FH Concrete Screw/Anchor, 2.0" Embed, 2.5" Min. Edge Distance

Masonry(Solid CMU Block) – BUILDEX TAPCON 1/4" FH Concrete Screw/Anchor, 2.0" Embed, 2.5" Min. Edge Distance

Aluminum(0.125" Thick Minimum/6063–T5) – 1/4"–14 FH Sheetmetal Screw, 1" Min. Edge Distance.

Wood(#2 SYP)--#14 x 4" Long Woodscrew 2.75"Minimum Penetration, 1" Minimum Edge Distance.

THRESHOLD

Steel (1/4" Thick, Fy=36 KSI)– ITW TEKS SCREW #14–20 PFH w/Wings Self–Drilling Screw, 0.625" Minimum Edge Distance

Concrete(3000 PSI)– BUILDEX TAPCON FH 1/4" Concrete Screw 2.0" Embed, 2.5" Minimum Edge Distance

Aluminum(0.125" Thick Minimum/6063–T5) – 1/4"–14 FH Sheetmetal Screw, 1" Minimum Edge Distance

2000 110 & 310 Bi-Parts Large Missile Impact Fastener Locations

JOHN E. SCATES
3121 FAIRGATE DR.
CARROLLTON, TX 75007
FL PE 51737

John E. Scates
2/1/2010

PRODUCT RENEWED
as complying with the Florida Building Code
Acceptance No. 09-0624.04
Expiration Date July 15, 2014
By Miami Dade Product Control Division

NO.	REVISIONS DESCRIPTION	DATE
1	REVISED PER METRO DADE	12/04/09
2		
3		
4		
5		
6		
7		
8		

ARCHITECT:
CONTRACTOR:
SERIES: 2000-110/310 TYPE: "S0-SX-SX-S0", "0-SX-SX-0"
STILE: MEDIUM FINISH:
ACTUATION:

Bi-Part Fastener Locations
Dwg. No. 040302-L

Horton AUTOMATICS
A DIVISION OF OVERHEAD DOOR CORP.
4242 BALDWIN BOULEVARD
CORPUS CHRISTI, TEXAS 78405-3399
361-888-5591 1-800-531-3111
FAX: 361-888-6510, 1-800-531-3108

JOB METRO–DADE
LOCATION:
DISTRIBUTOR:
DWN: LRod P.O. # SHEET 4 of 8
CHK: J.LACKEY DATE 3–02–04 REVISION 1

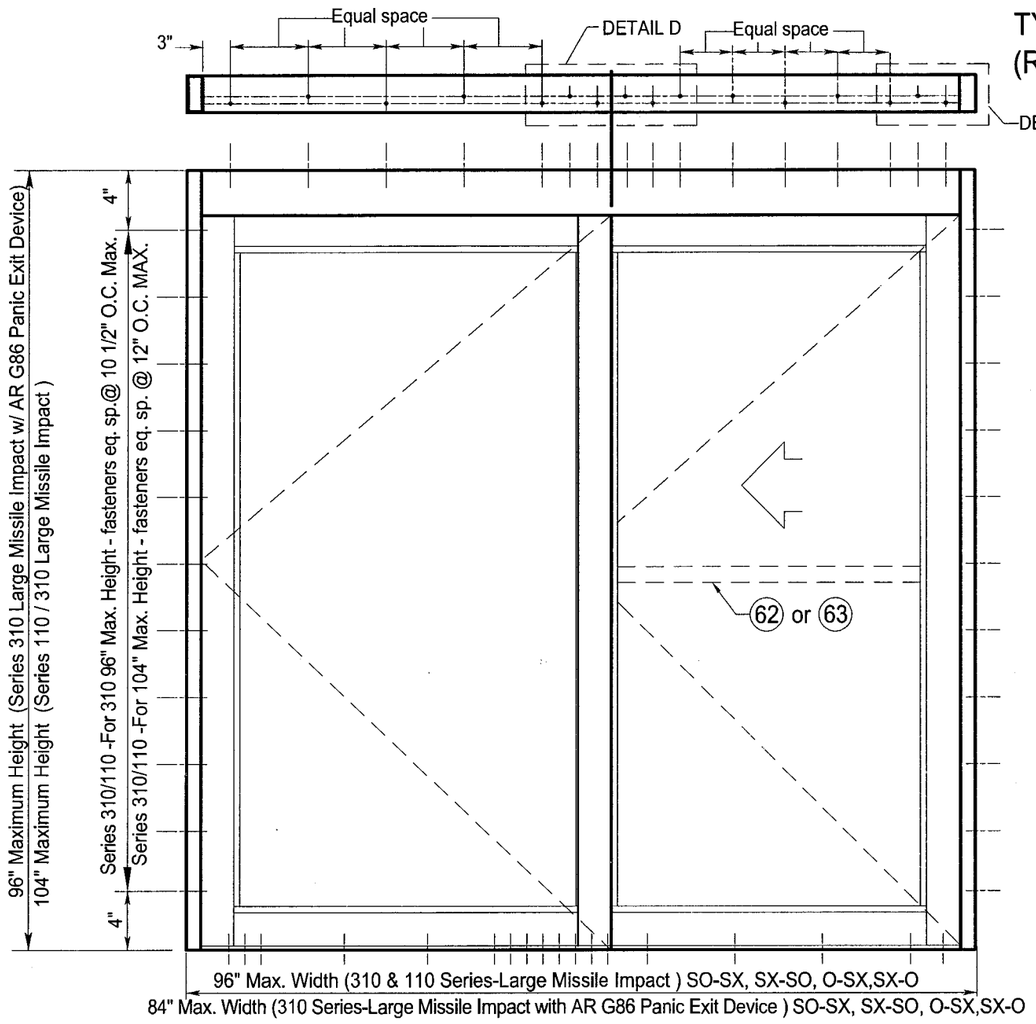

TYPE 110 & 310 Header
(Refer to Faceplate Location)

HEADER
Steel (1/4" Thick, Fy=36 KSI) – INTERCORP #14 Steel HWH Self-Drilling Screw, 0.625" Min. Edge Distance
Aluminum(0.125" Thick Min./6063-T5) – 1/4"-14 HWH Sheetmetal Screw, 1" Min. Edge Distance.

JAMBS
Steel (1/4" Thick, Fy=36 KSI) – ITW TEKS SCREW #14-20, FH w/WINGS Self-Drilling Screw 0.625" Minimum Edge Distance
Concrete(3000 PSI) – BUILDEX TAPCON 1/4" FH Concrete Screw/Anchor, 2.0" Embed, 2.5" Min. Edge Distance
Masonry(Solid CMU Block) – BUILDEX TAPCON 1/4" FH Concrete Screw/Anchor, 2.0" Embed, 2.5" Min. Edge Distance
Aluminum(0.125" Thick Minimum/6063-T5) – 1/4"-14 FH Sheetmetal Screw, 1" Min. Edge Distance.
Wood(#2 SYP)-#14 x 4" Long Woodscrew 2.75"Minimum Penetration, 1" Minimum Edge Distance.

THRESHOLD
Steel (1/4" Thick, Fy=36 KSI)– ITW TEKS SCREW #14-20 PFH w/Wings Self-Drilling Screw, 0.625" Minimum Edge Distance
Concrete(3000 PSI)– BUILDEX TAPCON FH 1/4" Concrete Screw 2.0" Embed, 2.5" Minimum Edge Distance
Aluminum(0.125" Thick Minimum/6063-T5) – 1/4"-14 FH Sheetmetal Screw, 1" Minimum Edge Distance

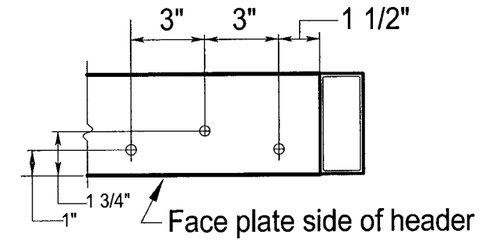

DETAIL E
6 Total

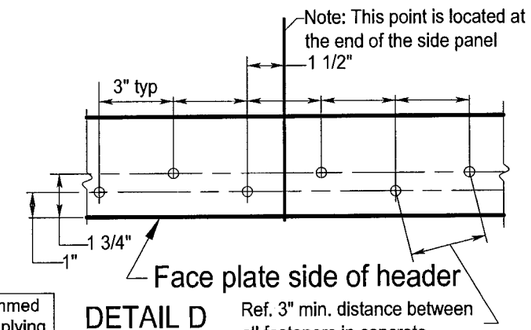

DETAIL D
6 Total

Ref. 3" min. distance between all fasteners in concrete

The frame must be shimmed with a type of shim complying with the Florida Building Code and is capable of resisting the frame's rotation-1/4" thk. Max

The 4/3 increase stress factor for wind loads was not used in the anchor calculations.

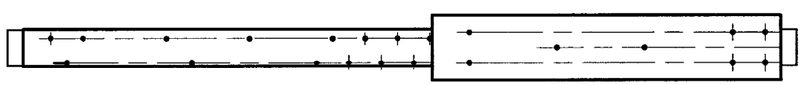

TYPE 110 Threshold

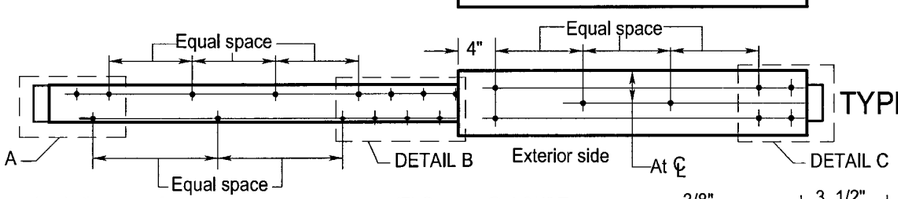

TYPE 310 Threshold

NOTE
Fastener spacing is the same for 110 & 310 except as noted

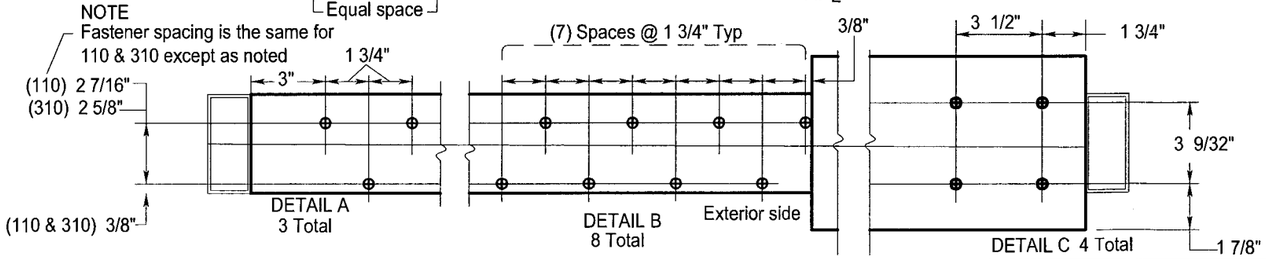

2000 110 & 310 Single Slide Large Missile Impact Fastener Locations

JOHN E. SCATES
3121 FAIRGATE DR.
CARROLLTON, TX 75007
FL PE 51737

John E Scates
2/1/2010

PRODUCT RENEWED
as complying with the Florida Buiding Code
Acceptance No 09-0624.04
Expiration Date July 15, 2014
By Ishaq I. Chanda
Miami Dade Product Control Division

NO.	REVISIONS DESCRIPTION	DATE
1	REVISED PER METRO DADE	12/04/09
2		
3		
4		
5		
6		
7		
8		

ARCHITECT:
CONTRACTOR:
SERIES 2000 110/310 TYPE: S0-SX" & "SX-SO", 0-SX" & "SX-0"
STILE: MEDIUM FINISH:
ACTUATION:

Single Slide Fastener Locations
Dwg. No. 040302-L

Horton AUTOMATICS
A DIVISION OF OVERHEAD DOOR CORP.
4242 BALDWIN BOULEVARD
CORPUS CHRISTI, TEXAS 78405-3399
361-888-5591 1-800-531-3111
FAX: 361-888-6510, 1-800-531-3108

JOB METRO-DADE
LOCATION:
DISTRIBUTOR:
DWN: LRod P.O. # SHEET 5 of 8
CHK: J. LACKEY DATE 3-02-04 REVISION 1

ITEM #	HORTON PART NUMBER	DESCRIPTION
1	C00265.000R	ALUMINUM EXTRUSION: HEADER
2	C00266.000R	ALUMINUM EXTRUSION:FACEPLATE
3	C00264.000R	ALUMINUM EXTRUSION:TRAY
4	C00314.000R	ALUMINUM EXTRUSION:INTERLOCK TOP
5	C00327.000R	ALUMINUM EXTRUSION:INTERLOCK LOWER
6	C00337.000R	ALUMINUM EXTRUSION:TOP RAIL
7	C00370.0001	ALUMINUM EXTRUSION:GLASS STOP
8	C00283.0000	ALUMINUM EXTRUSION:BOTTOM RAIL
9	C00315.0000	ALUMINUM EXTRUSION:TRACK FILLER
10	C00330.0001	ALUMINUM EXTRUSION: BOTTOM GUIDE
11	C00386.0001	ALUMINUM EXTRUSION: ADAPTOR
12	C00342.04FL	ALUMINUM EXTRUSION: BOTTOM RAIL
13	C02801.000AB	ALUMINUM EXTRUSION: HORIZONTAL RAIL
14	C02899.0002	ALUMINUM EXTRUSION: CORNER BLOCK (used as reinforcement)
15	C00390.0000	ALUMINUM EXTRUSION: THRESHOLD 7"
16	C00300.000AB	ALUMINUM EXTRUSION: JAMB TUBE 4" X 1-3/4"
17	C00323.0000	ALUMINUM EXTRUSION: VERTICAL RAIL
18	C00363.0000	ALUMINUM EXTRUSION: VERTICAL RAIL
19	C00818.000R	BAR TORSION (serves as slide panel top pivot)
20	C02798.0001	ALUMINUM EXTRUSION: ADAPTOR
21	C02873.0000	THRESHOLD
22	C00379.001ABC	GLASS STOP
23	C00338.000R	GLASS STOP
24	C00343.001R	ALUMINUM EXTRUSION; HORIZONTAL RAIL
25	C00589.0000	PIVOT
26	C00888.002AB	CLIP INTERLOCK
27	C00524.00FL	WEATHERSEAL BRUSH Felton #490621
28	C00350.0000	NOSING SEAL SCHLEGEL #1104-5101
29	C00397.0000	ADAPTOR FOR ITEM 67
30	C00293.0000	WEATHERSEAL BRUSH Schlegel #8430-5016-7
31	C00454.0000	LOCK, MAX SECURITY AR MS1850S
32	C00463.0000	THUMBTURN AR 4066
33	C00487.0000	EXIT INDICATOR AR 4089
34	C00883.0000	THRESHOLD BOLT AR 4015 EXTENDING INTO HEAD AND SILL 1/2"
35	C00843.01FL	BOTTOM GUIDE DOOR MOUNTED
36	C00844.01FL	BOTTOM GUIDE DOOR MOUNTED
37	C01987.0000	STEEL TUBE 1"x1"x1/8" A500 (FULL LENGTH PANEL STILES)
38	C00426.0001	5/16 SPACER
39	C00453.0000	#10 X 5/8 PHSMS
40	C00450.0000	#10 X 1-1/2 FHSMS
41	C00437.0000	#10-24 X 1/2" FHMS EVERY 12" IN SIDELITES
42	C00404.0000	1/4-20 LOCKNUT
43	C02899.0002	ALUMINUM EXTRUSION: CORNER BLOCK (used as reinforcement)
44	C00417.0000	#14 X 1-1/2 HWSMS EVERY 12" IN SIDELITES
45	C07141.0000	#10-24 X 1" FHMS EVERY 12" IN SIDELITES
46	C02130.01FL	DRIVE WHEEL ASSEMBLY
47	C00815.0RFL	WHEEL ASSEMBLY
48	C00817.00FL	IDLER WHEEL ASSEMBLY
49	C00448.0000	PLATE, 4-5/8" X 8" X 1/8" ALUMINUM LOCATED UNDER THRESHOLD AT LOCK BOLTS
50	C00437.0000	#10-24 X 1/2" FHMS
51	C00693.0003	CORNER BLOCK
52	C08150.0000	1/4-20 X 3/4 HHMB
53	C00536.0004	CORNER BLOCK
54	C09490.0001	CORNER BLOCK
55	C01044.0001	CORNER BLOCK
56	C00437.0000	#10-24 X 1/2" FHMS 2 EACH AT EVERY 12"
57	C00341.0001	VINYL GLAZING BULB
58	C00291.0001	TRACK CAP
59	C00380.0001	TRACK
60	C00358.000R	ALUMINUM EXTRUSION: ASTRAGAL
61	C00664.001AB	#8 X 3/4 FHSMS
62	C02361.0000	EXIT DEVICE ADAM'S RITE G86H W/ CONCEALED ROD
63	C00278.001ABC	FIXED PUSHBAR; ALUMINUM TUBE
64	C09719.0000	3/8-16 ALL THREAD THRU BOLT IN ALL HORIZONTALS
65	C00371.000R	WEATHERSTRIP; PANEL TO JAMB
66	C00398.0000	ALUMINUM EXTRUSION; MOHAIR ADAPTOR
67	C00389.00FL	ADAPTER FOR ITEM 29
68	C00289.0000	TRACK CAP
69	C00536.0003	CORNER BLOCK
70	C08141.0000	1/4-20 X 1" FHMS
71	C01046.0000	BACKUP PLATE
72	C00538.000R	BACKUP PLATE
73	C02966.0002/C02967.0002	ALUMINUM EXTRUSION:BOTTOM RAIL 10"
74	C00345.005AB	ALUMINUM EXTRUSION:BOTTOM RAIL 9"
75	C02797.000AB	ALUMINUM EXTRUSION:BOTTOM RAIL 8"
76	C00852.0004	BOTTOM GUIDE DOOR MOUNTED

JOHN E. SCATES
3121 FAIRGATE DR.
CARROLLTON, TX 75007
FL PE 51737

John E. Scates
2/1/2010

PRODUCT RENEWED
as complying with the Florida
Building Code
Acceptance No 09-0624-04
Expiration Date July 15, 2014
By Ishaq I. Chand
Miami Dade Product Control
Division

Series 310 / 110 Large Missile Impact

NO.	REVISIONS DESCRIPTION	DATE
1	REVISED PER METRO DADE MARK-UPS	12/04/09
2		
3		
4		
5		
6		
7		
8		

ARCHITECT:
CONTRACTOR:
SERIES: 2000 110/310 TYPE: "SO-SX-SX-SO", "O-SX-SX-O","O-SX" & "SX-O"
STILE: MEDIUM FINISH:
ACTUATION:

Bill of materials
Dwg. No. 040302-L

Horton AUTOMATICS
A DIVISION OF OVERHEAD DOOR CORP.
4242 BALDWIN BOULEVARD
CORPUS CHRISTI, TEXAS 78405-3399
361-888-5591 1-800-531-3111
FAX: 361-888-6510, 1-800-531-3108

JOB METRO—DADE
LOCATION:
DISTRIBUTOR:
DWN: LRod | P.O. # | SHEET 6 of 8
CHK: J. LACKEY | DATE 3-02-04 | REVISION 1

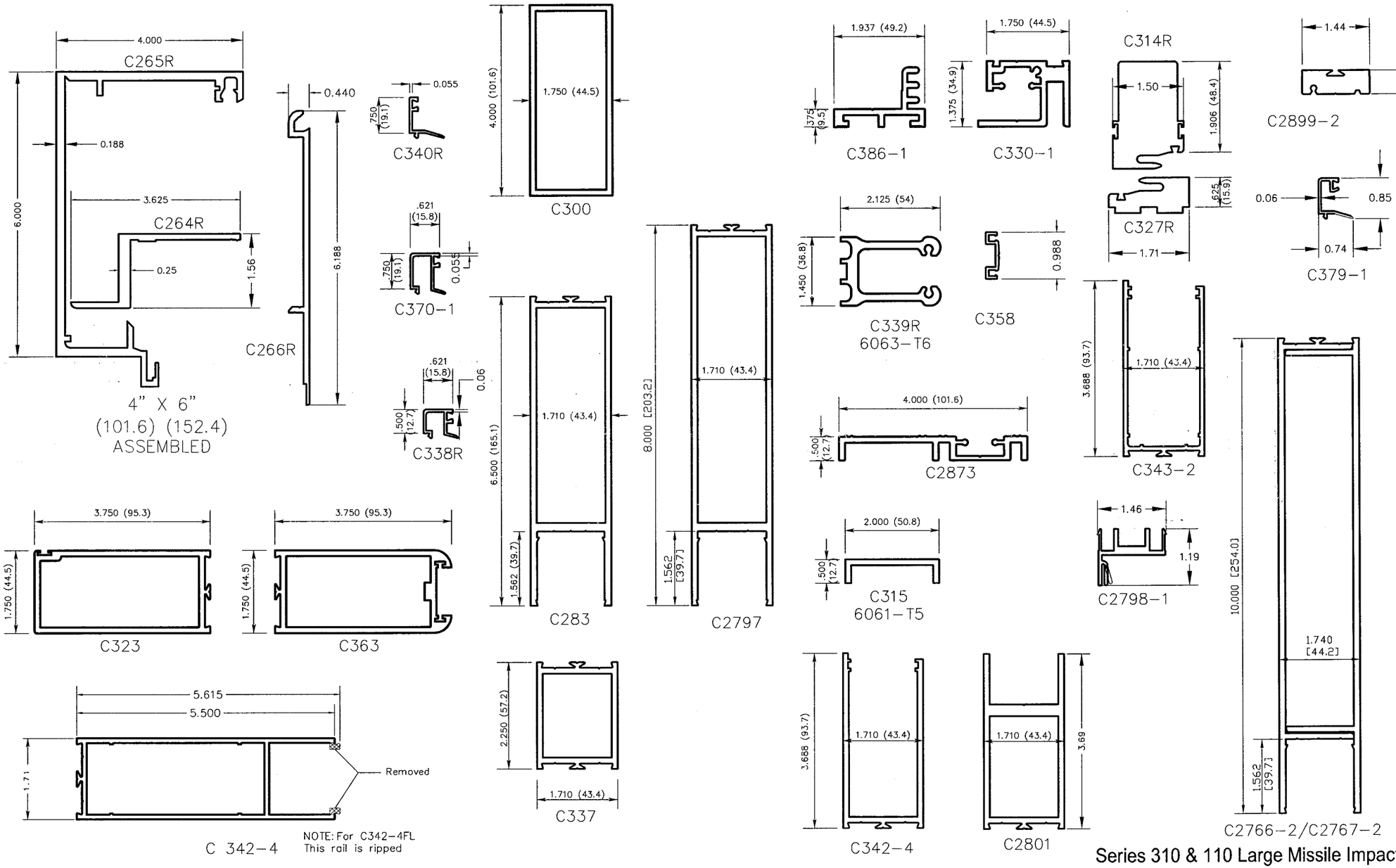

Series 310 & 110 Large Missile Impact

ALL EXTRUSIONS ARE 6063-T5 UNLESS OTHERWISE NOTED & t min=1/8"

JOHN E. SCATES
3121 FAIRGATE DR.
CARROLLTON, TX 75007
FL PE 51737

John E. Scates
2/1/2010

PRODUCT RENEWED
as complying with the Florida Building Code
Acceptance No. 09-0624.04
Expiration Date July 15, 2014
By Miami Dade Product Control Division

NO.	REVISIONS DESCRIPTION	DATE
1	REVISED PER METRO DADE MARK-UPS	12/04/09
2		
3		
4		
5		
6		
7		
8		

ARCHITECT:
CONTRACTOR:
SERIES: 2001-310/110 TYPE:
STILE: MEDIUM FINISH:
ACTUATION:

Extrusion chart
Dwg. No. 040302-L

Horton AUTOMATICS
A DIVISION OF OVERHEAD DOOR CORP.
4242 BALDWIN BOULEVARD
CORPUS CHRISTI, TEXAS 78405-3399
361-888-5591 1-800-531-3111
FAX: 361-888-6510, 1-800-531-3108

JOB METRO-DADE
LOCATION:
DISTRIBUTOR:
DWN: L.Rod P.O. # SHEET 7 of 8
CHK: J. LACKEY DATE 3-02-04 REVISION 1

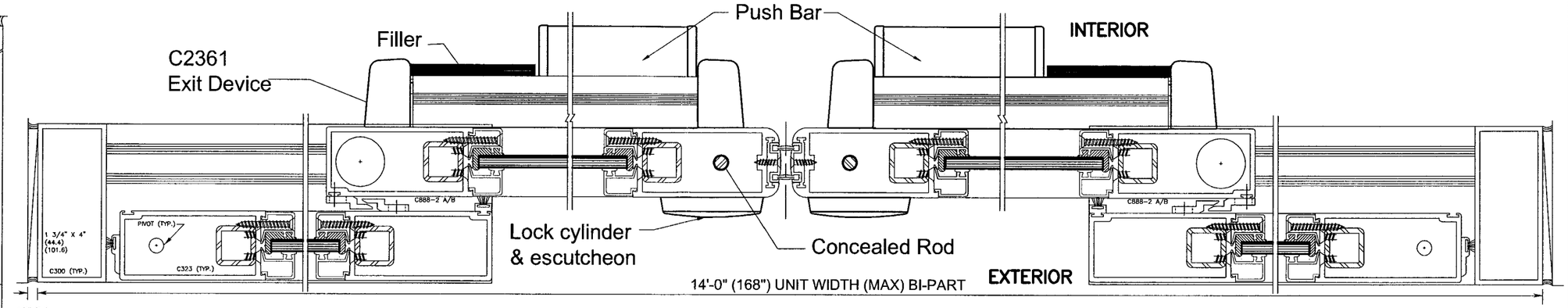

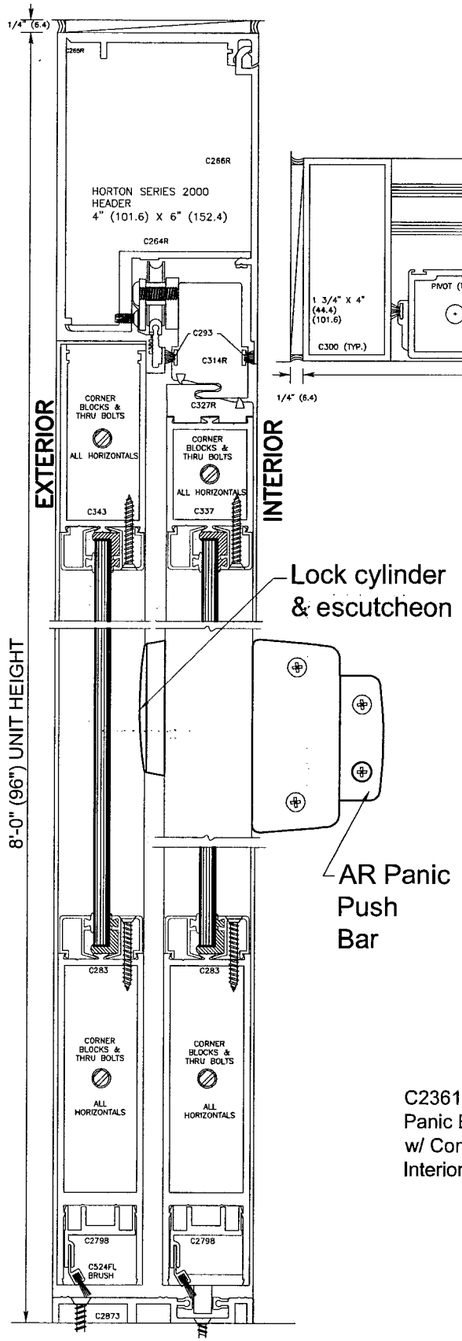

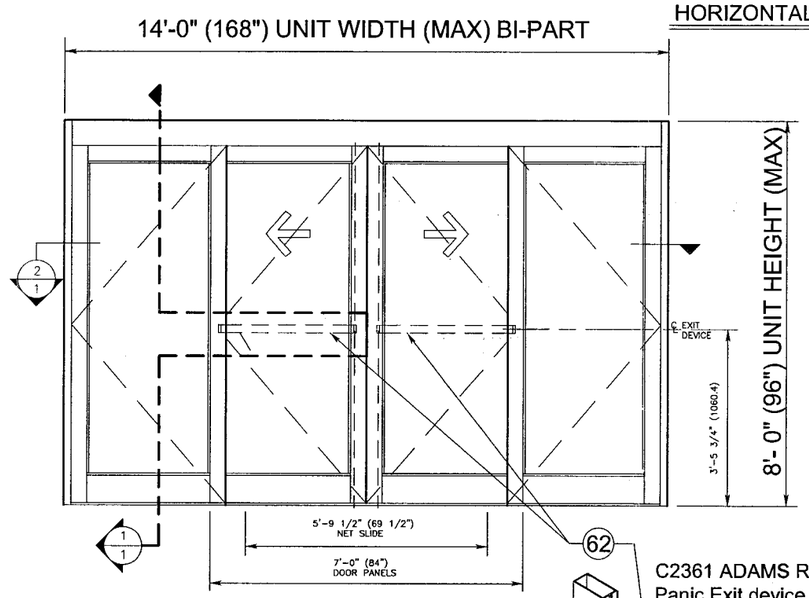

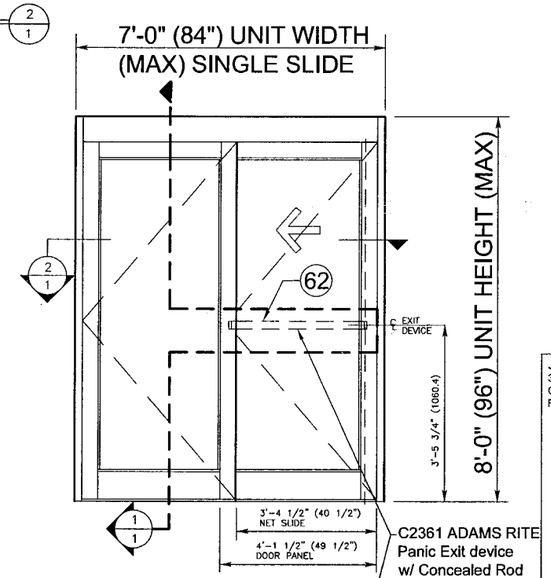

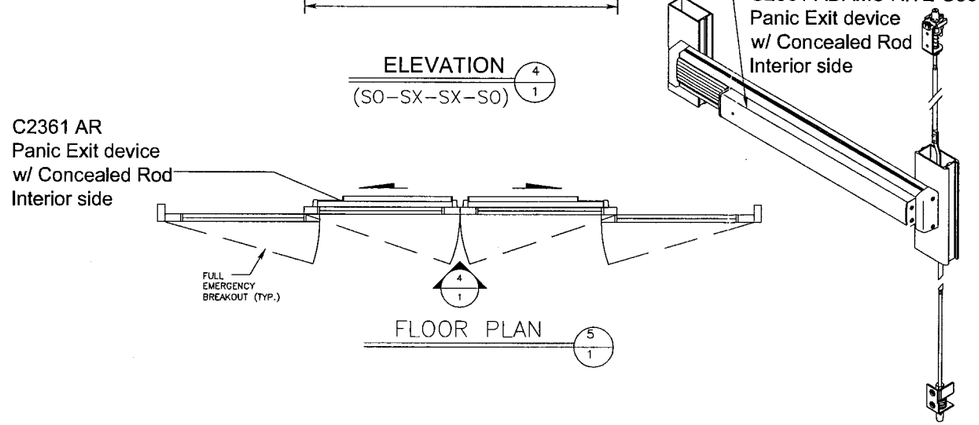

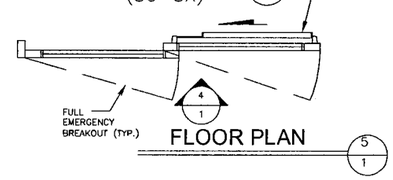

14 x 8'-0"(168" X 96") (SO-SX-SX-SO) &
7' x 8'-0" (84" X 96") (SO-SX) & (SX-SO)
w/ AR Panic Exit Device & Concealed Rod
(See Sheet 3) Series 310 Large Missile Impact

JOHN E. SCATES
3121 FAIRGATE DR.
CARROLLTON, TX 75007
FL PE 51737

John E. Scates
2/1/2010

PRODUCT RENEWED
as complying with the Florida Building Code
Acceptance No. 09-0624.04
Expiration Date July 15, 2014
By
Miami Dade Product Control Division

NO.	REVISIONS DESCRIPTION	DATE
1	REVISED PER METRO DADE MARK-UPS	12/4/09
2		
3		
4		
5		
6		
7		
8		

ARCHITECT:
CONTRACTOR:
SERIES: 2000-310 TYPE:
STILE: MEDIUM FINISH:
ACTUATION:

C2361 Panic Exit Device
Dwg. No. 040302-L

Horton AUTOMATICS
A DIVISION OF OVERHEAD DOOR CORP.
4242 BALDWIN BOULEVARD
CORPUS CHRISTI, TEXAS 78405-3399
361-888-5591 1-800-531-3111
FAX: 361-888-6510, 1-800-531-3108

JOB METRO-DADE
LOCATION:
DISTRIBUTOR:
DWN: LRod P.O. # SHEET 8 of 8
CHK: J. LACKEY DATE 3-02-04 REVISION 1