MIAMI-DADE COUNTY
BUILDING CODE COMPLIANCE OFFICE (BCCO)
PRODUCT CONTROL DIVISION

MIAMI-DADE COUNTY, FLORIDA
METRO-DADE FLAGLER BUILDING
140 WEST FLAGLER STREET, SUITE 1603
MIAMI, FLORIDA 33130-1563
(305) 375-2901 FAX (305) 372-6339
www.miamidade.gov/buildingcode

NOTICE OF ACCEPTANCE (NOA)

TRACO Security Windows & Doors, Inc.
71 Progress Avenue
Cranberry Township, PA 16066

SCOPE:
This NOA is being issued under the applicable rules and regulations governing the use of construction materials. The documentation submitted has been reviewed by Miami-Dade County Product Control Division and accepted by the Board of Rules and Appeals (BORA) to be used in Miami Dade County and other areas where allowed by the Authority Having Jurisdiction (AHJ).
This NOA shall not be valid after the expiration date stated below. The Miami-Dade County Product Control Division (In Miami Dade County) and/or the AHJ (in areas other than Miami Dade County) reserve the right to have this product or material tested for quality assurance purposes. If this product or material fails to perform in the accepted manner, the manufacturer will incur the expense of such testing and the AHJ may immediately revoke, modify, or suspend the use of such product or material within their jurisdiction. BORA reserves the right to revoke this acceptance, if it is determined by Miami-Dade County Product Control Division that this product or material fails to meet the requirements of the applicable building code. This product is approved as described herein, and has been designed to comply with the Florida Building Code, including the High Velocity Hurricane Zone.

DESCRIPTION: Steel Reinforced Aluminum Tube Mullion – L.M.I.

APPROVAL DOCUMENT: Drawing No. **06-TRA-0005**, titled "Aluminum Tube Mullions with Steel Reinforcement", sheets 1 through 5 of 5, dated 12/1/06, with revision dated 11/03/09, prepared by Engineering Express, signed and sealed by Frank L. Bennardo, P.E., bearing the Miami-Dade County Product Control Revision stamp with the Notice of Acceptance number and expiration date by the Miami-Dade County Product Control Division.

MISSILE IMPACT RATING: Large and Small Missile Impact Resistant

LABELING: Each unit shall bear a permanent label with the manufacturer's name:

TRACO	**TRACO**	**Security (TRACO)**
71 Progress Avenue	**2304 Silverdale Road**	**5100 N.W. 72nd Avenue**
Cranberry Township, PA 16066	**Johnson City, TN 37601**	**Miami, FL 33166**

and following statement: "Miami-Dade County Product Control Approved", unless otherwise noted herein.

RENEWAL of this NOA shall be considered after a renewal application has been filed and there has been no change in the applicable building code negatively affecting the performance of this product.

TERMINATION of this NOA will occur after the expiration date or if there has been a revision or change in the materials, use, and/or manufacture of the product or process. Misuse of this NOA as an endorsement of any product, for sales, advertising or any other purposes shall automatically terminate this NOA. Failure to comply with any section of this NOA shall be cause for termination and removal of NOA.

ADVERTISEMENT: The NOA number preceded by the words Miami-Dade County, Florida, and followed by the expiration date may be displayed in advertising literature. If any portion of the NOA is displayed, then it shall be done in its entirety.

INSPECTION: A copy of this entire NOA shall be provided to the user by the manufacturer or its distributors and shall be available for inspection at the job site at the request of the Building Official.
This NOA **revises NOA # 07-0828.05** and consists of this page 1 and evidence pages E-1 and E-2, as well as approval document mentioned above.
The submitted documentation was reviewed by **Manuel Perez, P.E.**

MIAMI-DADE COUNTY APPROVED

NOA No. 09-0624.07
Expiration Date: January 02, 2012
Approval Date: December 09, 2009

TRACO Security Windows & Doors, Inc.

NOTICE OF ACCEPTANCE: EVIDENCE SUBMITTED

A. DRAWINGS

1. Manufacturer's die drawings and sections.
2. Drawing No **06-TRA-0005**, Sheets 1 through 5 of 5, titled "Aluminum Tube Mullions with Steel Reinforcement", dated 12/1/06, with revision dated 11/03/09, prepared by Engineering Express, signed and sealed by Frank L. Bennardo, P.E.

B. TESTS

1. Test reports on: 1) Air Infiltration Test, per FBC, TAS 202-94
   2) Uniform Static Air Pressure Test, Loading per FBC TAS 202-94
   3) Water Resistance Test, per FBC, TAS 202-94
   4) Large Missile Impact Test per FBC, TAS 201-94
   5) Cyclic Wind Pressure Loading per FBC, TAS 203-94

   along with marked-up drawings and installation diagram of two mulled Alum. Single Hung Windows, prepared by Farabaugh Engineering and Testing, Inc., Test Report No. **FET-T214-07**, dated 6/21/07, signed and sealed by Daniel G. Farabaugh, P.E.
   (Submitted under previous NOA # 07-0826.05)
2. Test reports on: 1) Uniform Static Air Pressure Test, per PA 202-94.
   along with marked-up drawings and installation diagram of two mulled aluminum single hung windows, prepared by Miami Testing Laboratory, Inc., Test Report No. **MTL-16602**, dated 12/01/95, signed and sealed by David Gale Ober, P.E.
   (Submitted under previous NOA # 99-0104.01)
3. Test reports on: 1) Large Missile Impact Test per PA 201-94
   2) Cyclic Wind Pressure Loading per PA 203-94

   along with marked-up drawings and installation diagram of two mulled aluminum double hung windows, prepared by Fenestration Testing Laboratory, Inc., Test Report No. **FTL-1350**, dated 12/12/95, signed and sealed by Gilbert Diamond, P.E.
   (Submitted under previous NOA # 99-0104.01)

C. CALCULATIONS

1. Revised anchor verification calculations and structural analysis, complying with FBC-2007, dated 6/19/09, prepared by Engineering Express, signed and sealed by Frank L. Bennardo, P.E.

D. QUALITY ASSURANCE

1. Miami Dade Building Code Compliance Office (BCCO).

E. MATERIAL CERTIFICATIONS

1. None.

Manuel Perez, P.E.
Product Control Examiner
NOA No. 09-0624.07
Expiration Date: January 02, 2012
Approval Date: December 09, 2009

F. STATEMENTS

1. Statement letter of conformance, dated February 11, 2009, signed and sealed by Frank L. Bennardo, P.E.
2. Statement letter of no financial interest, dated February 11, 2009, signed and sealed by Frank L. Bennardo, P.E.

G. OTHERS

1. Notice of Acceptance No. **07-0828.05**, issued to TRACO Security Windows & Doors, Inc. for their Aluminum Tube Mullion (w/ Steel Reinforcement) – L.M.I., approved on 12/06/07 and expiring on 01/02/12.

Manuel Perez, P.E.
Product Control Examiner
NOA No. 09-0624.07
Expiration Date: January 02, 2012
Approval Date: December 09, 2009

ALUMINUM TUBE MULLIONS WITH STEEL REINFORCEMENT

LARGE MISSILE IMPACT RESISTANT

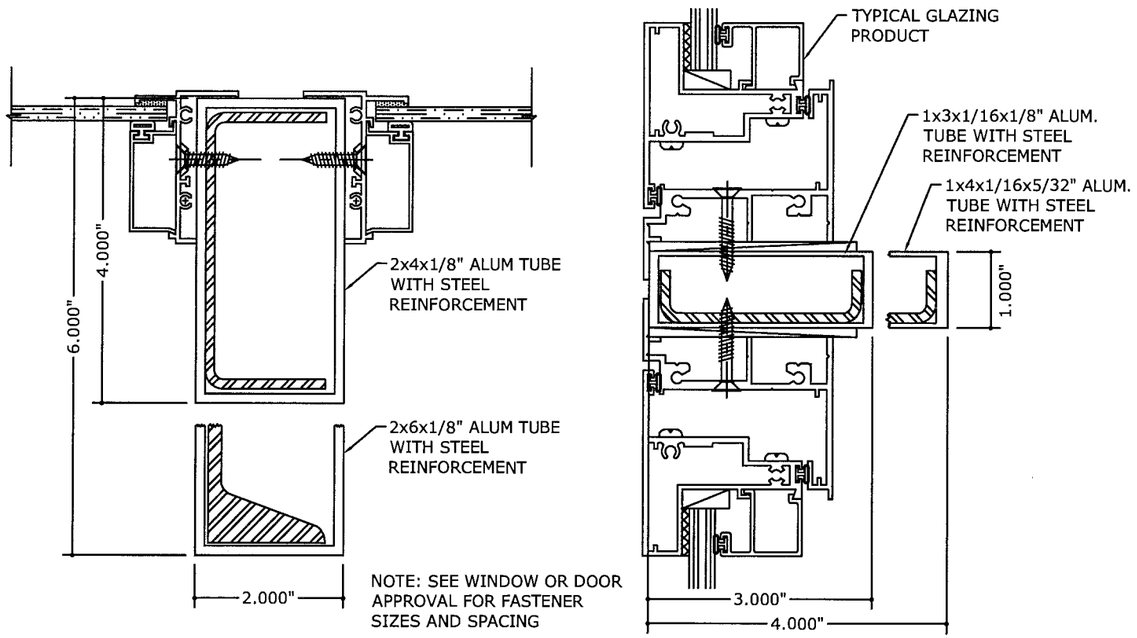

1/1 TYPICAL REINFORCED MULLIONS SUPPORTING FENESTRATION PRODUCTS

HORIZONTAL OR VERTICAL INSTALLATION

GENERAL NOTES

1. THE SYSTEM DESCRIBED HEREIN HAS BEEN DESIGNED AND TESTED IN ACCORDANCE WITH THE 2007 FLORIDA BUILDING CODE, FOR USE WITHIN THE HIGH VELOCITY HURRICANE ZONE, PER TAS 201 / 203 AND THE 2005 ALUMINUM DESIGN MANUAL.
2. NO 33-1/3% INCREASE IN ALLOWABLE STRESS HAS BEEN USED IN THE DESIGN OF THIS SYSTEM. WIND LOAD DURATION FACTOR Cd=1.6 HAS BEEN USED FOR WOOD ANCHOR DESIGN.
3. POSITIVE AND NEGATIVE DESIGN PRESSURES CALCULATED FOR USE WITH THIS SYSTEM SHALL BE DETERMINED BY OTHERS ON A JOB-SPECIFIC BASIS IN ACCORDANCE WITH THE GOVERNING CODE.
4. THE SYSTEM DETAILED HEREIN IS GENERIC AND DOES NOT PROVIDE INFORMATION FOR A SPECIFIC SITE. FOR SITE CONDITIONS DIFFERENT FROM THE CONDITIONS DETAILED HEREIN, A LICENSED ENGINEER OR REGISTERED ARCHITECT SHALL PREPARE SITE SPECIFIC DOCUMENTS FOR USE IN CONJUNCTION WITH THIS DOCUMENT.
5. PERMIT HOLDER SHALL VERIFY THE ADEQUACY OF THE EXISTING STRUCTURE TO WITHSTAND SUPERIMPOSED LOADS. WOOD BUCKS (BY OTHERS) SHALL BE ANCHORED PROPERLY TO TRANSFER LOADS TO THE EXISTING STRUCTURE.
6. ALL ALUMINUM TUBE EXTRUSIONS SHALL BE 6063-T5 ALUMINUM ALLOY, UNLESS NOTED OTHERWISE. ALL STEEL REINFORCING COMPONENTS SHALL BE A36 STEEL.
7. ALL FENESTRATION PRODUCTS TO BE USED WITH THESE MULLIONS SHALL MEET ALL APPLICABLE CODE REQUIREMENTS, e.g. WIND LOAD RESISTANCE, AIR & WATER INFILTRATION, FORCED ENTRY, SAFEGUARDS, ETC.
8. TOP & BOTTOM DETAILS SHOWN MAY BE INTERCHANGED AS FIELD CONDITIONS DICTATE. MULLIONS MAY BE MOUNTED VERTICALLY OR HORIZONTALLY AS APPLICABLE.
9. ANCHORS SHALL BE INSTALLED IN ACCORDANCE WITH MANUFACTURERS' RECOMMENDATIONS.
10. WOOD HOST STRUCTURE SHALL BE "SOUTHERN PINE" G=0.55 OR GREATER DENSITY.
11. MINIMUM ANCHOR EMBEDMENT SHALL BE AS NOTED IN HEREIN. MINIMUM EMBEDMENT AND EDGE DISTANCE EXCLUDES STUCCO, FOAM, BRICK, AND OTHER WALL FINISHES.
12. MULLIONS SHOWN HEREIN ARE LARGE MISSILE IMPACT RESISTANT. VERIFY IMPACT RESISTANCE OF FENESTRATION PRODUCTS TO BE USED WITH THESE MULLIONS.
13. ALL BOLTS & WASHERS SHALL BE ZINC COATED STEEL, GALVANIZED STEEL, OR STAINLESS STEEL WITH A MINIMUM TENSILE YIELD STRENGTH OF 60 KSI.
14. ALL STEEL IN CONTACT WITH ALUMINUM SHALL BE PAINTED OR PLATED.

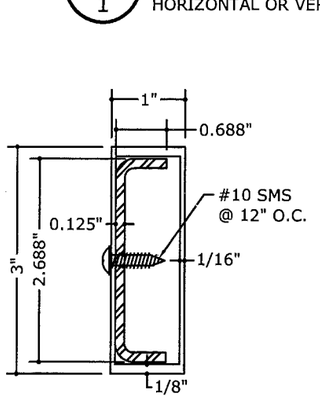

I_x=1.977 IN^4
$S_{x_ALUMINUM}$=0.49 IN^3
S_{x_STEEL}=0.33 IN^3

1 1"x3"x1/16"x1/8" TUBE MULLION

N.T.S. 6063-T5 ALUM. TUBE A36 STEEL REINF.

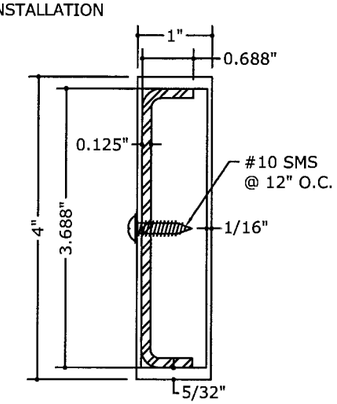

I_x=4.493 IN^4
$S_{x_ALUMINUM}$=0.84 IN^3
S_{x_STEEL}=0.353 IN^3

2 1"x4"x1/16"x5/32" TUBE MULLION

N.T.S. 6063-T5 ALUM. TUBE A36 STEEL REINF.

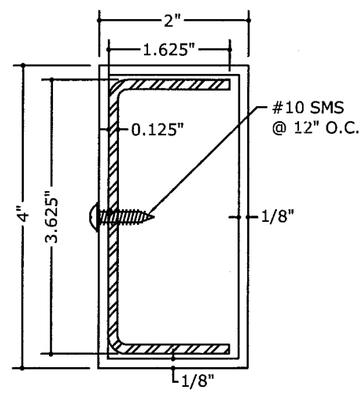

I_x=7.765 IN^4
$S_{x_ALUMINUM}$=1.49 IN^3
S_{x_STEEL}=0.91 IN^3

3 2"x4"x1/8" TUBE MULLION

N.T.S. 6063-T5 ALUM. TUBE A36 STEEL REINF.

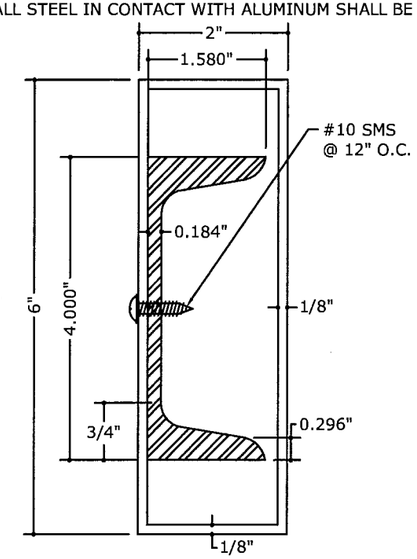

I_x=19.445 IN^4
$S_{x_ALUMINUM}$=2.76 IN^3
S_{x_STEEL}=1.93 IN^3

4 2"x6"x1/8" TUBE MULLION

N.T.S. 6063-T5 ALUM. TUBE A36 STEEL REINF.

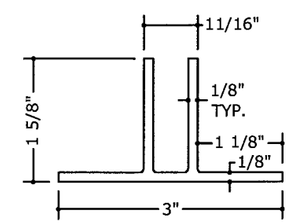

5 1" MULLION CLIP

N.T.S. 6063-T5 ALUM.

PRODUCT REVISED
as complying with the Florida Building Code
Acceptance No. 09-0624.07
Expiration Date JAN. 4, 2012
By Miami-Dade Product Control Division

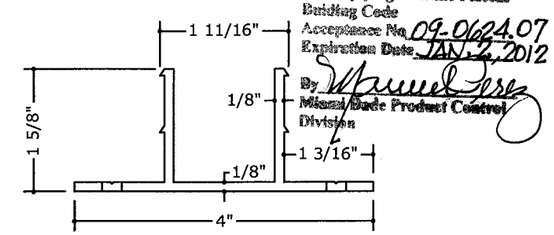

6 2" MULLION CLIP

N.T.S. 6063-T5 ALUM.

FRANK L. BENNARDO, P.E.
PE0046549
11/03/2009

ENGINEERING EXPRESS®
160 SW 12th AVENUE, #106
DEERFIELD BEACH, FL 33442
PH: (954) 354-0660 FAX: (954) 354-0443
WWW.ENGEXP.COM
CERT OF AUTH #9885
A. FRANK L. BENNARDO, P.E., INC. INNOVATION

TRACO Windows & Doors Inc.
71 Progress Avenue, Cranberry Township, PA 16166
Tel. (724) 776-7000

ALUMINUM TUBE MULLIONS WITH STEEL REINFORCEMENT
LARGE MISSILE IMPACT RESISTANT
MIAMI-DADE NOTICE OF ACCEPTANCE

REMARKS	DRWN	CHKD	DATE
INIT ISSUE	CL	FLB	12/1/06
2007 FBC REVISION	KL	CL	02/10/09
BCCO COMMENTS	RKB	FLB	11/03/09

06-TRA-0005
SCALE: - 03
PAGE DESCRIPTION:
-
-

5

1

F:\01 Project Files\Traco (TRA)\2006 Jobs\06-TRA-0005 Mullions with Steel Reinf, LMI (NOA)\06-TRA-0005_03a Mullions with Steel Reinf, LMI (NOA).dwg
rbartlett
11/03/2009 - 5:01pm

DESIGN LOAD SCHEDULES

1. TABLES BELOW GIVE THE ALLOWABLE PRESSURES AND REACTIONS AT ENDS FOR EACH TUBE MULLION AT SPAN & TRIBUTARY DIMENSIONS SHOWN.
2. USE "REACTION AT ENDS" TO DETERMINE ALLOWABLE ANCHOR TYPES SHOWN IN CONNECTION DETAILS. THE "REACTION AT ENDS" SHALL NOT EXCEED THE MAXIMUM ALLOWABLE SHEAR CAPACITY OF ANCHOR TYPES.
3. MULLION SPAN & TRIBUTARY SPAN ARE DEPICTED TO THE RIGHT.

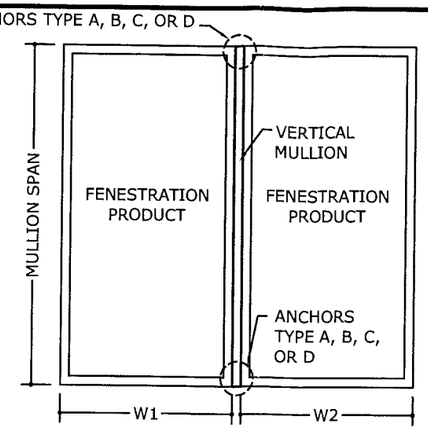

"TRIBUTARY SPAN" = $\frac{W1 + W2}{2}$

PRODUCT REVIEWED
as complying with the Florida
Building Code
Acceptance No. 09-0624.07
Expiration Date JAN 2, 2012
By Manuel Perez
Miami-Dade Product Control
Division

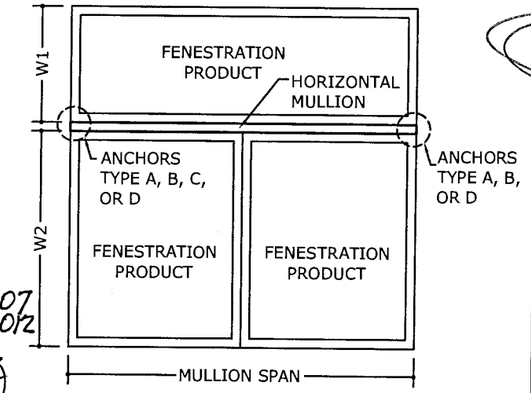

1" x 3" x 1/16" x 1/8" REINFORCED TUBE MULLION

MULLION SPAN	TRIBUTARY SPAN 24" DESIGN PRESSURE (PSF)	24" REACTION AT ENDS (LBS)	27" DESIGN PRESSURE (PSF)	27" REACTION AT ENDS (LBS)	30" DESIGN PRESSURE (PSF)	30" REACTION AT ENDS (LBS)	33" DESIGN PRESSURE (PSF)	33" REACTION AT ENDS (LBS)	36" DESIGN PRESSURE (PSF)	36" REACTION AT ENDS (LBS)	39" DESIGN PRESSURE (PSF)	39" REACTION AT ENDS (LBS)	42" DESIGN PRESSURE (PSF)	42" REACTION AT ENDS (LBS)	45" DESIGN PRESSURE (PSF)	45" REACTION AT ENDS (LBS)	48" DESIGN PRESSURE (PSF)	48" REACTION AT ENDS (LBS)	51" DESIGN PRESSURE (PSF)	51" REACTION AT ENDS (LBS)	54" DESIGN PRESSURE (PSF)	54" REACTION AT ENDS (LBS)	57" DESIGN PRESSURE (PSF)	57" REACTION AT ENDS (LBS)
144"	12.8	153.7	11.4	153.7	10.2	153.7	-----	-----	-----	-----	-----	-----	-----	-----	-----	-----	-----	-----	-----	-----	-----	-----	-----	-----
138"	14.2	162.8	12.6	162.8	11.3	162.8	10.3	162.8	-----	-----	-----	-----	-----	-----	-----	-----	-----	-----	-----	-----	-----	-----	-----	-----
132"	15.7	172.8	14.0	172.8	12.6	172.8	11.4	172.8	10.5	172.8	-----	-----	-----	-----	-----	-----	-----	-----	-----	-----	-----	-----	-----	-----
126"	17.5	184.1	15.6	184.1	14.0	184.1	12.8	184.1	11.7	184.1	10.8	184.1	10.0	184.1	-----	-----	-----	-----	-----	-----	-----	-----	-----	-----
120"	19.7	196.8	17.5	196.8	15.7	196.8	14.3	196.8	13.1	196.8	12.1	196.8	11.2	196.8	10.5	196.8	-----	-----	-----	-----	-----	-----	-----	-----
114"	22.2	211.1	19.7	211.1	17.8	211.1	16.2	211.1	14.8	211.1	13.7	211.1	12.7	211.1	11.8	211.1	11.1	211.1	10.5	211.1	-----	-----	-----	-----
108"	25.3	227.4	22.5	227.4	20.2	227.4	18.4	227.4	16.8	227.4	15.5	227.4	14.4	227.4	13.5	227.4	12.6	227.4	11.9	227.4	11.2	227.4	10.6	227.4
102"	29.0	246.1	25.7	246.1	23.2	246.1	21.1	246.1	19.3	246.1	17.8	246.1	16.5	246.1	15.4	246.1	14.5	246.1	13.6	246.1	12.9	246.1	12.2	246.1
96"	33.5	267.8	29.8	267.8	26.8	267.8	24.3	267.8	22.3	267.8	20.6	267.8	19.1	267.8	17.9	267.8	16.7	267.8	15.8	267.8	14.9	267.8	14.1	267.8
90"	39.1	293.1	34.7	293.1	31.3	293.1	28.4	293.1	26.1	293.1	24.1	293.1	22.3	293.1	20.8	293.1	19.5	293.1	18.4	293.1	17.4	293.1	16.5	293.1
84"	46.2	323.2	41.0	323.2	36.9	323.2	33.6	323.2	30.8	323.2	28.4	323.2	26.4	323.2	24.6	323.2	23.1	323.2	21.7	323.2	20.5	323.2	19.4	323.2
78"	55.3	359.2	49.1	359.2	44.2	359.2	40.2	359.2	36.8	359.2	34.0	359.2	31.6	359.2	29.5	359.2	27.6	359.2	26.0	359.2	24.6	359.2	23.3	359.2
72"	67.2	403.2	59.7	403.2	53.8	403.2	48.9	403.2	44.8	403.2	41.4	403.2	38.4	403.2	35.8	403.2	33.6	403.2	31.6	403.2	29.9	403.2	28.3	403.2
66"	83.2	457.8	74.0	457.8	66.6	457.8	60.5	457.8	55.5	457.8	51.2	457.8	47.6	457.8	44.4	457.8	41.6	457.8	39.2	457.8	37.0	457.8	35.0	457.8
60"	105.4	527.2	93.7	527.2	84.3	527.2	76.7	527.2	70.3	527.2	64.9	527.2	60.2	527.2	56.2	527.2	52.7	527.2	49.6	527.2	46.9	527.2	44.4	527.2
54"	137.3	617.8	122.0	617.8	109.8	617.8	99.8	617.8	91.5	617.8	84.5	617.8	78.4	617.8	73.2	617.8	68.6	617.8	64.6	617.8	61.0	617.8	57.8	617.8
48"	140.0	560.0	140.0	630.0	140.0	700.0	134.6	740.2	123.4	740.2	113.9	740.2	105.7	740.2	98.7	740.2	92.5	740.2	87.1	740.2	82.2	740.2	77.9	740.2
42"	140.0	490.0	140.0	551.3	140.0	612.5	140.0	673.8	140.0	735.0	140.0	796.3	140.0	857.5	138.2	907.2	129.6	907.2	122.0	907.2	115.2	907.2	109.1	907.2
36"	140.0	420.0	140.0	472.5	140.0	525.0	140.0	577.5	140.0	630.0	140.0	682.5	140.0	735.0	140.0	787.5	140.0	840.0	140.0	892.5	140.0	945.0	140.0	997.5
30"	140.0	350.0	140.0	393.8	140.0	437.5	140.0	481.3	140.0	525.0	140.0	568.8	140.0	612.5	140.0	656.3	140.0	700.0	140.0	743.8	140.0	787.5	140.0	831.3

1" x 4" x 1/16" x 5/32" REINFORCED TUBE MULLION

MULLION SPAN	TRIBUTARY SPAN 24" DESIGN PRESSURE (PSF)	24" REACTION AT ENDS (LBS)	27" DESIGN PRESSURE (PSF)	27" REACTION AT ENDS (LBS)	30" DESIGN PRESSURE (PSF)	30" REACTION AT ENDS (LBS)	33" DESIGN PRESSURE (PSF)	33" REACTION AT ENDS (LBS)	36" DESIGN PRESSURE (PSF)	36" REACTION AT ENDS (LBS)	39" DESIGN PRESSURE (PSF)	39" REACTION AT ENDS (LBS)	42" DESIGN PRESSURE (PSF)	42" REACTION AT ENDS (LBS)	45" DESIGN PRESSURE (PSF)	45" REACTION AT ENDS (LBS)	48" DESIGN PRESSURE (PSF)	48" REACTION AT ENDS (LBS)	51" DESIGN PRESSURE (PSF)	51" REACTION AT ENDS (LBS)	54" DESIGN PRESSURE (PSF)	54" REACTION AT ENDS (LBS)	57" DESIGN PRESSURE (PSF)	57" REACTION AT ENDS (LBS)
144"	19.5	234.2	17.4	234.2	15.6	234.2	14.2	234.2	13.0	234.2	12.0	234.2	11.2	234.2	10.4	234.2	-----	-----	-----	-----	-----	-----	-----	-----
138"	21.5	247.6	19.1	247.6	17.2	247.6	15.7	247.6	14.4	247.6	13.2	247.6	12.3	247.6	11.5	247.6	10.8	247.6	10.1	247.6	-----	-----	-----	-----
132"	23.9	262.4	21.2	262.4	19.1	262.4	17.3	262.4	15.9	262.4	14.7	262.4	13.6	262.4	12.7	262.4	11.9	262.4	11.2	262.4	10.6	262.4	10.0	262.4
126"	26.6	278.8	23.6	278.8	21.2	278.8	19.3	278.8	17.7	278.8	16.3	278.8	15.2	278.8	14.2	278.8	13.3	278.8	12.5	278.8	11.8	278.8	11.2	278.8
120"	29.7	297.2	26.4	297.2	23.8	297.2	21.6	297.2	19.8	297.2	18.3	297.2	17.0	297.2	15.9	297.2	14.9	297.2	14.0	297.2	13.2	297.2	12.5	297.2
114"	33.5	317.9	29.7	317.9	26.8	317.9	24.3	317.9	22.3	317.9	20.6	317.9	19.1	317.9	17.8	317.9	16.7	317.9	15.7	317.9	14.9	317.9	14.1	317.9
108"	37.9	341.4	33.7	341.4	30.3	341.4	27.6	341.4	25.3	341.4	23.3	341.4	21.7	341.4	20.2	341.4	19.0	341.4	17.9	341.4	16.9	341.4	16.0	341.4
102"	43.3	368.2	38.5	368.2	34.7	368.2	31.5	368.2	28.9	368.2	26.7	368.2	24.8	368.2	23.1	368.2	21.7	368.2	20.4	368.2	19.3	368.2	18.2	368.2
96"	49.9	399.2	44.4	399.2	39.9	399.2	36.3	399.2	33.3	399.2	30.7	399.2	28.5	399.2	26.6	399.2	24.9	399.2	23.5	399.2	22.2	399.2	21.0	399.2
90"	58.0	435.2	51.6	435.2	46.4	435.2	42.2	435.2	38.7	435.2	35.7	435.2	33.2	435.2	30.9	435.2	29.0	435.2	27.3	435.2	25.8	435.2	24.4	435.2
84"	68.2	477.5	60.6	477.5	54.6	477.5	49.6	477.5	45.5	477.5	42.0	477.5	39.0	477.5	36.4	477.5	34.1	477.5	32.1	477.5	30.3	477.5	28.7	477.5
78"	81.2	528.1	72.2	528.1	65.0	528.1	59.1	528.1	54.2	528.1	50.0	528.1	46.4	528.1	43.3	528.1	40.6	528.1	38.2	528.1	36.1	528.1	34.2	528.1
72"	98.2	589.3	87.3	589.3	78.6	589.3	71.4	589.3	65.5	589.3	60.4	589.3	56.1	589.3	52.4	589.3	49.1	589.3	46.2	589.3	43.6	589.3	41.4	589.3
66"	120.9	664.8	107.4	664.8	96.7	664.8	87.9	664.8	80.6	664.8	74.4	664.8	69.1	664.8	64.5	664.8	60.4	664.8	56.9	664.8	53.7	664.8	50.9	664.8
60"	140.0	700.0	135.1	760.0	121.6	760.0	110.5	760.0	101.3	760.0	93.5	760.0	86.9	760.0	81.1	760.0	76.0	760.0	71.5	760.0	67.6	760.0	64.0	760.0
54"	140.0	630.0	140.0	708.8	140.0	787.5	140.0	866.3	130.9	883.4	120.8	883.4	112.2	883.4	104.7	883.4	98.2	883.4	92.4	883.4	87.2	883.4	82.7	883.4
48"	140.0	560.0	140.0	630.0	140.0	700.0	140.0	770.0	140.0	840.0	140.0	910.0	140.0	980.0	139.8	1048.8	131.1	1048.8	123.4	1048.8	116.5	1048.8	110.4	1048.8
42"	140.0	490.0	140.0	551.3	140.0	612.5	140.0	673.8	140.0	735.0	140.0	796.3	140.0	857.5	140.0	918.8	140.0	980.0	140.0	1041.3	140.0	1102.5	140.0	1163.8
36"	140.0	420.0	140.0	472.5	140.0	525.0	140.0	577.5	140.0	630.0	140.0	682.5	140.0	735.0	140.0	787.5	140.0	840.0	140.0	892.5	140.0	945.0	140.0	997.5
30"	140.0	350.0	140.0	393.8	140.0	437.5	140.0	481.3	140.0	525.0	140.0	568.8	140.0	612.5	140.0	656.3	140.0	700.0	140.0	743.8	140.0	787.5	140.0	831.3

FRANK L. BENNARDO, P.E.
PE0046549
11/03/2009

ENGINEERING EXPRESS®
160 SW 12th AVENUE, #106
DEERFIELD BEACH, FL 33442
PH: (954) 354-0660 FAX: (954) 354-0443
WWW.ENGEXP.COM
CERT OF AUTH #9885
A FRANK L. BENNARDO, P.E., INC. INNOVATION

TRACO Windows & Doors Inc.
71 Progress Avenue, Cranberry Township, PA 16166
Tel. (724) 776-7000

ALUMINUM TUBE MULLIONS WITH STEEL REINFORCEMENT
LARGE MISSILE IMPACT RESISTANT
MIAMI-DADE NOTICE OF ACCEPTANCE

REMARKS	DRWN	CHKD	DATE
INIT ISSUE	CL	FLB	12/1/06
2007 FBC REVISION	KL	CL	02/10/09
BCCO COMMENTS	RKB	FLB	11/03/09
-	-	-	-
-	-	-	-

06-TRA-0005
SCALE: - 03
PAGE DESCRIPTION:
-
-

5

2

11/03/2009 - 4:53pm rbartlett F:\01 Project Files\Traco (TRA)\2006 Jobs\06-TRA-0005 Mullions with Steel Reinf, LMI (NOA)\06-TRA-0005_03a Mullions with Steel Reinf, LMI (NOA).dwg

DESIGN LOAD SCHEDULES (CONTINUED)

2" x 4" x 1/8" REINFORCED TUBE MULLION

MULLION SPAN	TRIBUTARY SPAN 24" DESIGN PRESSURE (PSF)	24" REACTION AT ENDS (LBS)	27" DESIGN PRESSURE (PSF)	27" REACTION AT ENDS (LBS)	30" DESIGN PRESSURE (PSF)	30" REACTION AT ENDS (LBS)	33" DESIGN PRESSURE (PSF)	33" REACTION AT ENDS (LBS)	36" DESIGN PRESSURE (PSF)	36" REACTION AT ENDS (LBS)	39" DESIGN PRESSURE (PSF)	39" REACTION AT ENDS (LBS)	42" DESIGN PRESSURE (PSF)	42" REACTION AT ENDS (LBS)	45" DESIGN PRESSURE (PSF)	45" REACTION AT ENDS (LBS)	48" DESIGN PRESSURE (PSF)	48" REACTION AT ENDS (LBS)	51" DESIGN PRESSURE (PSF)	51" REACTION AT ENDS (LBS)	54" DESIGN PRESSURE (PSF)	54" REACTION AT ENDS (LBS)	57" DESIGN PRESSURE (PSF)	57" REACTION AT ENDS (LBS)
144"	46.6	559.7	41.5	559.7	37.3	559.7	33.9	559.7	31.1	559.7	28.7	559.7	26.7	559.7	24.9	559.7	23.3	559.7	22.0	559.7	20.7	559.7	19.6	559.7
138"	51.6	593.9	45.9	593.9	41.3	593.9	37.6	593.9	34.4	593.9	31.8	593.9	29.5	593.9	27.5	593.9	25.8	593.9	24.3	593.9	23.0	593.9	21.7	593.9
132"	57.5	632.1	51.1	632.1	46.0	632.1	41.8	632.1	38.3	632.1	35.4	632.1	32.8	632.1	30.6	632.1	28.7	632.1	27.0	632.1	25.5	632.1	24.2	632.1
126"	64.3	675.1	57.2	675.1	51.4	675.1	46.8	675.1	42.9	675.1	39.6	675.1	36.7	675.1	34.3	675.1	32.1	675.1	30.3	675.1	28.6	675.1	27.1	675.1
120"	72.4	723.9	64.3	723.9	57.9	723.9	52.6	723.9	48.3	723.9	44.5	723.9	41.4	723.9	38.6	723.9	36.2	723.9	34.1	723.9	32.2	723.9	30.5	723.9
114"	82.1	779.7	73.0	779.7	65.7	779.7	59.7	779.7	54.7	779.7	50.5	779.7	46.9	779.7	43.8	779.7	41.0	779.7	38.6	779.7	36.5	779.7	34.6	779.7
108"	93.8	844.0	83.4	844.0	75.0	844.0	68.2	844.0	62.5	844.0	57.7	844.0	53.6	844.0	50.0	844.0	46.9	844.0	44.1	844.0	41.7	844.0	39.5	844.0
102"	108.1	918.8	96.1	918.8	86.5	918.8	78.6	918.8	72.1	918.8	66.5	918.8	61.8	918.8	57.7	918.8	54.0	918.8	50.9	918.8	48.0	918.8	45.5	918.8
96"	125.9	1006.9	111.9	1006.9	100.7	1006.9	91.5	1006.9	83.9	1006.9	77.5	1006.9	71.9	1006.9	67.1	1006.9	62.9	1006.9	59.2	1006.9	55.9	1006.9	53.0	1006.9
90"	140.0	1050.0	131.8	1112.0	118.6	1112.0	107.8	1112.0	98.8	1112.0	91.2	1112.0	84.7	1112.0	79.1	1112.0	74.1	1112.0	69.8	1112.0	65.9	1112.0	62.4	1112.0
84"	140.0	980.0	140.0	1102.5	140.0	1225.0	128.7	1239.1	118.0	1239.1	108.9	1239.1	101.2	1239.1	94.4	1239.1	88.5	1239.1	83.3	1239.1	78.7	1239.1	74.5	1239.1
78"	140.0	910.0	140.0	1023.8	140.0	1137.5	140.0	1251.3	140.0	1365.0	132.1	1395.7	122.7	1395.7	114.5	1395.7	107.4	1395.7	101.0	1395.7	95.4	1395.7	90.4	1395.7
72"	140.0	840.0	140.0	945.0	140.0	1050.0	140.0	1155.0	140.0	1260.0	140.0	1365.0	140.0	1470.0	140.0	1575.0	131.3	1575.2	123.5	1575.2	116.7	1575.2	110.5	1575.2
66"	140.0	770.0	140.0	866.3	140.0	962.5	140.0	1058.8	140.0	1155.0	140.0	1251.3	140.0	1347.5	140.0	1443.8	140.0	1540.0	140.0	1636.3	140.0	1732.5	134.6	1758.8
60"	140.0	700.0	140.0	787.5	140.0	875.0	140.0	962.5	140.0	1050.0	140.0	1137.5	140.0	1225.0	140.0	1312.5	140.0	1400.0	140.0	1487.5	140.0	1575.0	140.0	1662.5
54"	140.0	630.0	140.0	708.8	140.0	787.5	140.0	866.3	140.0	945.0	140.0	1023.8	140.0	1102.5	140.0	1181.3	140.0	1260.0	140.0	1338.8	140.0	1417.5	140.0	1496.3
48"	140.0	560.0	140.0	630.0	140.0	700.0	140.0	770.0	140.0	840.0	140.0	910.0	140.0	980.0	140.0	1050.0	140.0	1120.0	140.0	1190.0	140.0	1260.0	140.0	1330.0
42"	140.0	490.0	140.0	551.3	140.0	612.5	140.0	673.8	140.0	735.0	140.0	796.3	140.0	857.5	140.0	918.8	140.0	980.0	140.0	1041.3	140.0	1102.5	140.0	1163.8
36"	140.0	420.0	140.0	472.5	140.0	525.0	140.0	577.5	140.0	630.0	140.0	682.5	140.0	735.0	140.0	787.5	140.0	840.0	140.0	892.5	140.0	945.0	140.0	997.5
30"	140.0	350.0	140.0	393.8	140.0	437.5	140.0	481.3	140.0	525.0	140.0	568.8	140.0	612.5	140.0	656.3	140.0	700.0	140.0	743.8	140.0	787.5	140.0	831.3

2" x 6" x 1/8" REINFORCED TUBE MULLION

MULLION SPAN	TRIBUTARY SPAN 24" DESIGN PRESSURE (PSF)	24" REACTION AT ENDS (LBS)	27" DESIGN PRESSURE (PSF)	27" REACTION AT ENDS (LBS)	30" DESIGN PRESSURE (PSF)	30" REACTION AT ENDS (LBS)	33" DESIGN PRESSURE (PSF)	33" REACTION AT ENDS (LBS)	36" DESIGN PRESSURE (PSF)	36" REACTION AT ENDS (LBS)	39" DESIGN PRESSURE (PSF)	39" REACTION AT ENDS (LBS)	42" DESIGN PRESSURE (PSF)	42" REACTION AT ENDS (LBS)	45" DESIGN PRESSURE (PSF)	45" REACTION AT ENDS (LBS)	48" DESIGN PRESSURE (PSF)	48" REACTION AT ENDS (LBS)	51" DESIGN PRESSURE (PSF)	51" REACTION AT ENDS (LBS)	54" DESIGN PRESSURE (PSF)	54" REACTION AT ENDS (LBS)	57" DESIGN PRESSURE (PSF)	57" REACTION AT ENDS (LBS)
144"	120.5	1446.1	107.1	1446.1	96.4	1446.1	87.6	1446.1	80.3	1446.1	74.2	1446.1	68.9	1446.1	64.3	1446.1	60.3	1446.1	56.7	1446.1	53.6	1446.1	50.7	1446.1
138"	134.4	1545.6	119.5	1545.6	107.5	1545.6	97.7	1545.6	89.6	1545.6	82.7	1545.6	76.8	1545.6	71.7	1545.6	67.2	1545.6	63.2	1545.6	59.7	1545.6	56.6	1545.6
132"	140.0	1540.0	133.8	1656.4	120.5	1656.4	109.5	1656.4	100.4	1656.4	92.7	1656.4	86.0	1656.4	80.3	1656.4	75.3	1656.4	70.9	1656.4	66.9	1656.4	63.4	1656.4
126"	140.0	1470.0	140.0	1653.8	134.0	1759.1	121.8	1759.1	111.7	1759.1	103.1	1759.1	95.7	1759.1	89.4	1759.1	83.8	1759.1	78.8	1759.1	74.5	1759.1	70.5	1759.1
120"	140.0	1400.0	140.0	1575.0	140.0	1750.0	136.2	1872.2	124.8	1872.2	115.2	1872.2	107.0	1872.2	99.9	1872.2	93.6	1872.2	88.1	1872.2	83.2	1872.2	78.8	1872.2
114"	140.0	1330.0	140.0	1496.3	140.0	1662.5	140.0	1828.8	140.0	1995.0	129.4	1997.3	120.1	1997.3	112.1	1997.3	105.1	1997.3	98.9	1997.3	93.4	1997.3	88.5	1997.3
108"	140.0	1260.0	140.0	1417.5	140.0	1575.0	140.0	1732.5	140.0	1890.0	140.0	2047.5	135.6	2136.4	126.6	2136.4	118.7	2136.4	111.7	2136.4	105.5	2136.4	99.9	2136.4
102"	140.0	1190.0	140.0	1338.8	140.0	1487.5	140.0	1636.3	140.0	1785.0	140.0	1933.8	140.0	2082.5	140.0	2231.3	134.8	2291.9	126.9	2291.9	119.8	2291.9	113.5	2291.9
96"	140.0	1120.0	140.0	1260.0	140.0	1400.0	140.0	1540.0	140.0	1680.0	140.0	1820.0	140.0	1960.0	140.0	2100.0	140.0	2240.0	140.0	2380.0	137.1	2467.0	129.8	2467.0
90"	140.0	1050.0	140.0	1181.3	140.0	1312.5	140.0	1443.8	140.0	1575.0	140.0	1706.3	140.0	1837.5	140.0	1968.8	140.0	2100.0	140.0	2231.3	140.0	2362.5	140.0	2493.8
84"	140.0	980.0	140.0	1102.5	140.0	1225.0	140.0	1347.5	140.0	1470.0	140.0	1592.5	140.0	1715.0	140.0	1837.5	140.0	1960.0	140.0	2082.5	140.0	2205.0	140.0	2327.5
78"	140.0	910.0	140.0	1023.8	140.0	1137.5	140.0	1251.3	140.0	1365.0	140.0	1478.8	140.0	1592.5	140.0	1706.3	140.0	1820.0	140.0	1933.8	140.0	2047.5	140.0	2161.3
72"	140.0	840.0	140.0	945.0	140.0	1050.0	140.0	1155.0	140.0	1260.0	140.0	1365.0	140.0	1470.0	140.0	1575.0	140.0	1680.0	140.0	1785.0	140.0	1890.0	140.0	1995.0
66"	140.0	770.0	140.0	866.3	140.0	962.5	140.0	1058.8	140.0	1155.0	140.0	1251.3	140.0	1347.5	140.0	1443.8	140.0	1540.0	140.0	1636.3	140.0	1732.5	140.0	1828.8
60"	140.0	700.0	140.0	787.5	140.0	875.0	140.0	962.5	140.0	1050.0	140.0	1137.5	140.0	1225.0	140.0	1312.5	140.0	1400.0	140.0	1487.5	140.0	1575.0	140.0	1662.5
54"	140.0	630.0	140.0	708.8	140.0	787.5	140.0	866.3	140.0	945.0	140.0	1023.8	140.0	1102.5	140.0	1181.3	140.0	1260.0	140.0	1338.8	140.0	1417.5	140.0	1496.3
48"	140.0	560.0	140.0	630.0	140.0	700.0	140.0	770.0	140.0	840.0	140.0	910.0	140.0	980.0	140.0	1050.0	140.0	1120.0	140.0	1190.0	140.0	1260.0	140.0	1330.0
42"	140.0	490.0	140.0	551.3	140.0	612.5	140.0	673.8	140.0	735.0	140.0	796.3	140.0	857.5	140.0	918.8	140.0	980.0	140.0	1041.3	140.0	1102.5	140.0	1163.8
36"	140.0	420.0	140.0	472.5	140.0	525.0	140.0	577.5	140.0	630.0	140.0	682.5	140.0	735.0	140.0	787.5	140.0	840.0	140.0	892.5	140.0	945.0	140.0	997.5
30"	140.0	350.0	140.0	393.8	140.0	437.5	140.0	481.3	140.0	525.0	140.0	568.8	140.0	612.5	140.0	656.3	140.0	700.0	140.0	743.8	140.0	787.5	140.0	831.3

PRODUCT REVISED
as complying with the Florida
Building Code
Acceptance No. 09-0624.07
Expiration Date JAN. 2, 2012
By Manuel Perez
Miami-Dade Product Control
Division

FRANK L. BENNARDO, P.E.
PE0046549
11/03/2009
ENGINEERING EXPRESS®
160 SW 12th AVENUE, #106
DEERFIELD BEACH, FL 33442
PH: (954) 354-0660 FAX: (954) 354-0443
WWW.ENGEXP.COM
CERT OF AUTH #9885
A FRANK L. BENNARDO, P.E., INC. INNOVATION

TRACO Windows & Doors Inc.
71 Progress Avenue, Cranberry Township, PA 16066
Tel. (724) 776-7000

ALUMINUM TUBE MULLIONS WITH STEEL REINFORCEMENT
LARGE MISSILE IMPACT RESISTANT
MIAMI-DADE NOTICE OF ACCEPTANCE

REMARKS	DRWN	CHKD	DATE
INIT ISSUE	CL	FLB	12/1/06
2007 FBC REVISION	KL	CL	02/10/09
BCCO COMMENTS	RKB	FLB	11/03/09

06-TRA-0005
SCALE: - 03
PAGE DESCRIPTION:
-
-
5
3

11/03/2009 - 4:53pm rbartlett F:\01 Project Files\Traco (TRA)\2006 Jobs\06-TRA-0005 Mullions with Steel Reinf, LMI (NOA)\06-TRA-0005_03a Mullions with Steel Reinf, LMI (NOA).dwg

ANCHOR TYPE "A"

ALLOWABLE SHEAR CAPACITY = 302 LBS

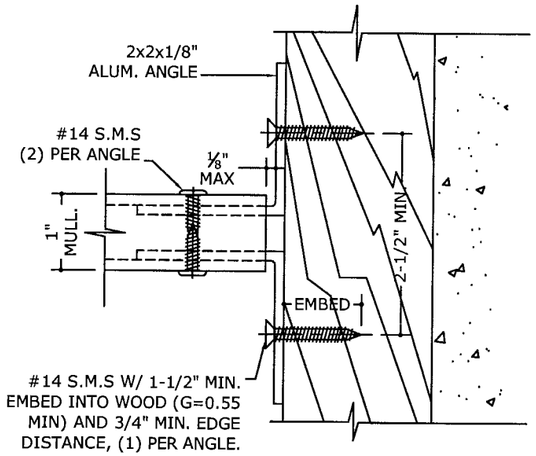

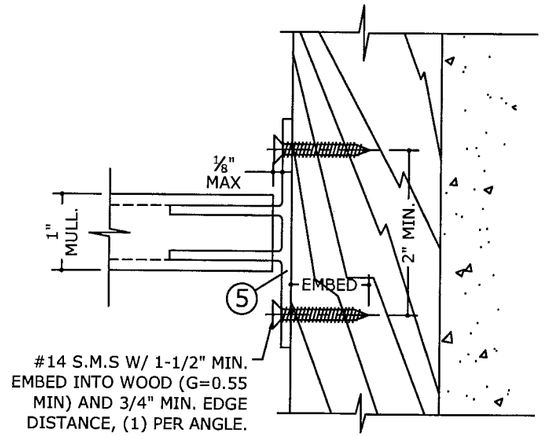

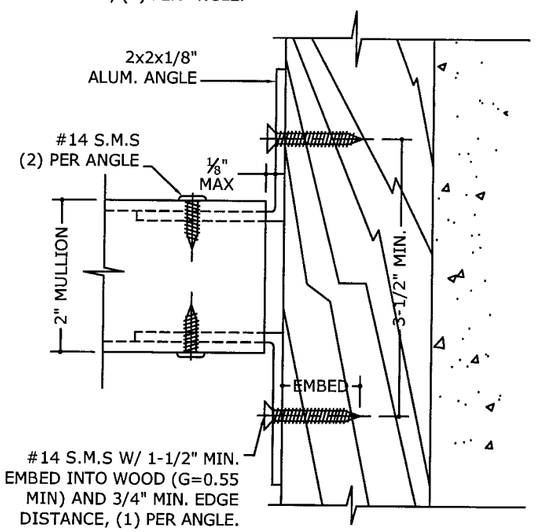

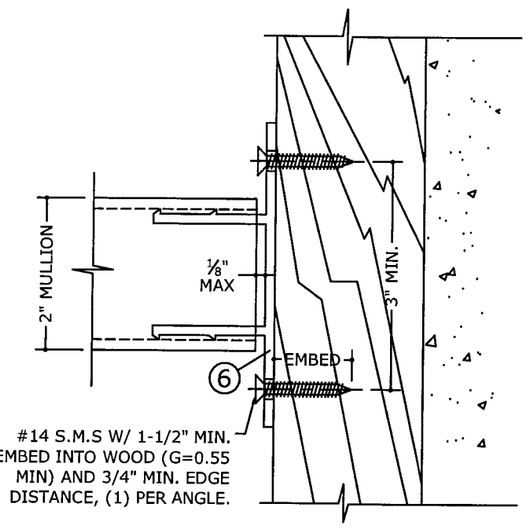

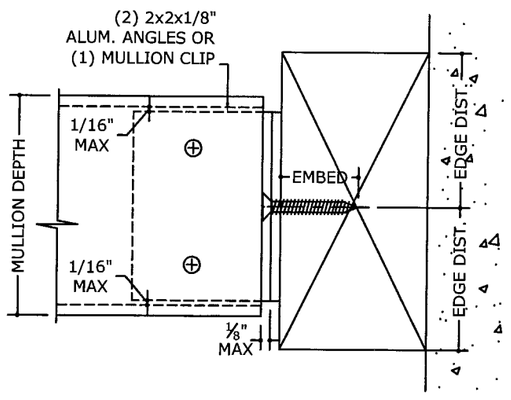

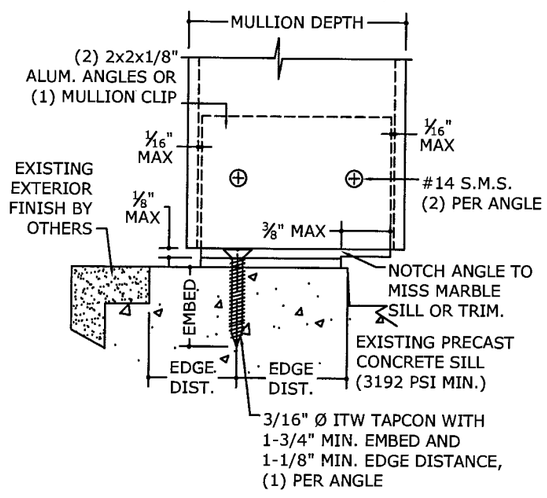

ANCHOR TYPE "B"

ALLOWABLE SHEAR CAPACITY = 604 LBS

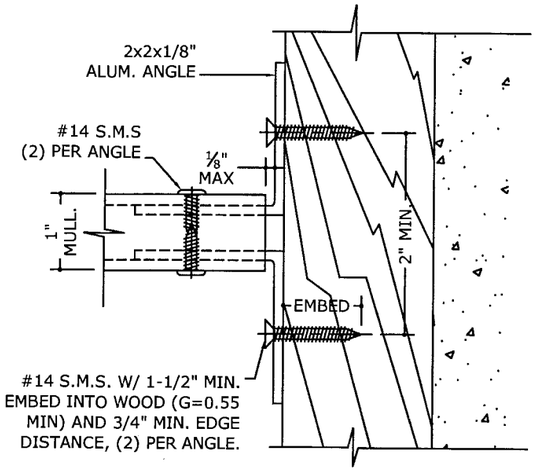

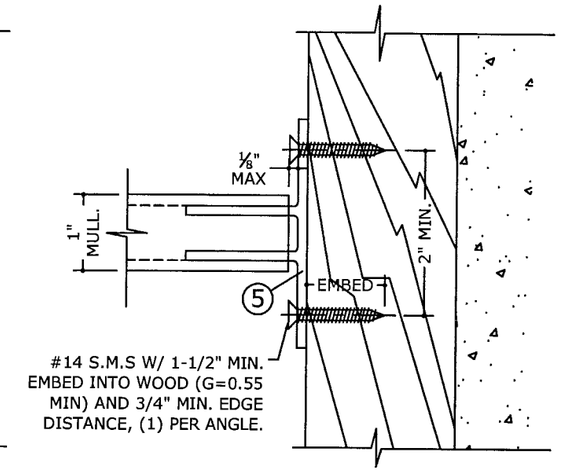

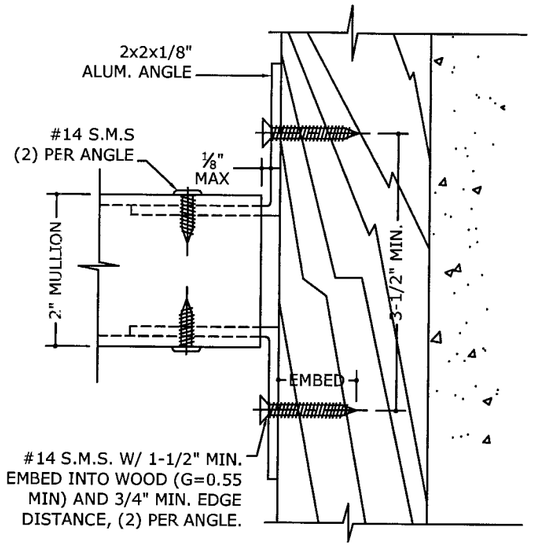

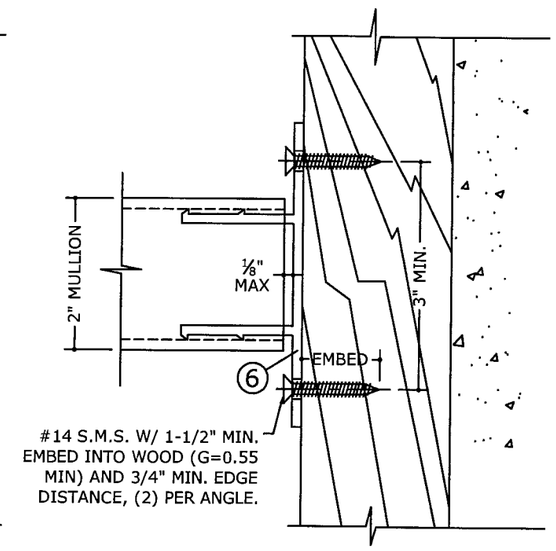

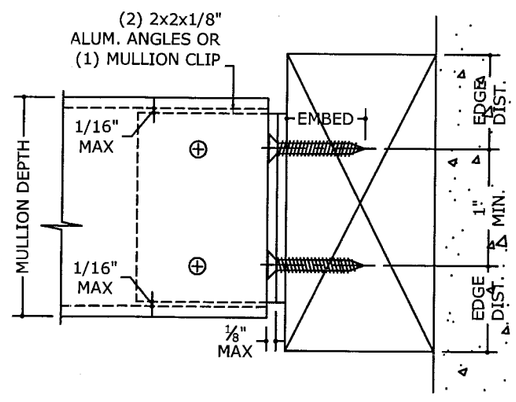

PRODUCT REVISED
as complying with the Florida Building Code
Acceptance No. 09-0624.07
Expiration Date JAN. 2, 2012
By Manuel Perez
Miami-Dade Product Control Division

FRANK L. BENNARDO, P.E.
PE0046549
11/03/2009

ENGINEERING EXPRESS®
160 SW 12th AVENUE, #106
DEERFIELD BEACH, FL 33442
PH: (954) 354-0660 FAX: (954) 354-0443
WWW.ENGEXP.COM
CERT OF AUTH #9885
A. FRANK L. BENNARDO, P.E., INC. INNOVATION

TRACO Windows & Doors Inc.
71 Progress Avenue, Cranberry Township, PA 16166
Tel. (724) 776-7000

ALUMINUM TUBE MULLIONS WITH STEEL REINFORCEMENT
LARGE MISSILE IMPACT RESISTANT
MIAMI-DADE NOTICE OF ACCEPTANCE

REMARKS	DRWN	CHKD	DATE
INIT ISSUE	CL	FLB	12/1/06
2007 FBC REVISION	KL	CL	02/10/09
BCCO COMMENTS	RKB	FLB	11/03/09

06-TRA-0005

SCALE: - 03

PAGE DESCRIPTION:

5

4

11/03/2009 - 4:53pm rbartlett F:\01 Project Files\Traco (TRA)\2006 Jobs\06-TRA-0005 Mullions with Steel Reinf. LMI (NOA)\06-TRA-0005_03a Mullions with Steel Reinf. LMI (NOA).dwg

ANCHOR TYPE "A"

ALLOWABLE SHEAR CAPACITY = 302 LBS

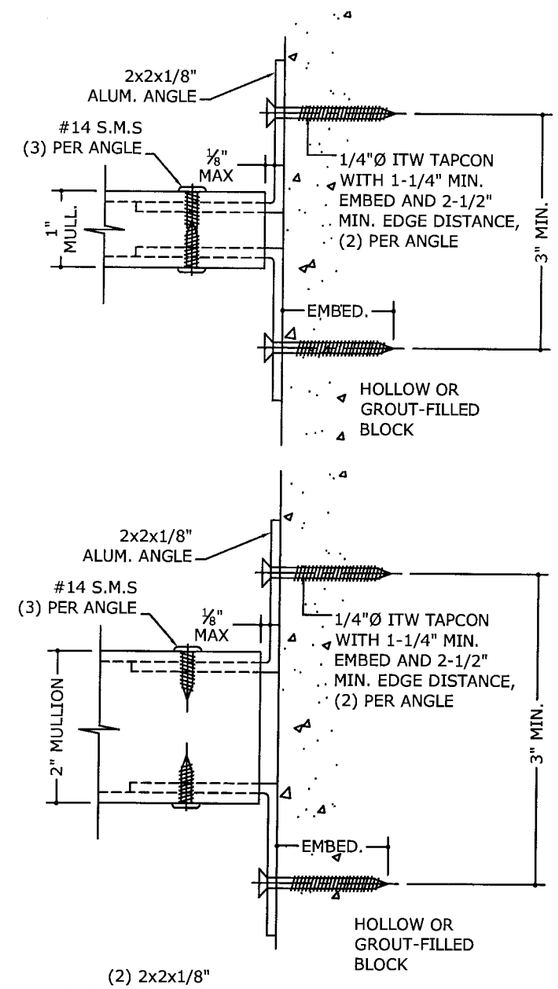

ANCHOR TYPE "B"

ALLOWABLE SHEAR CAPACITY = 604 LBS

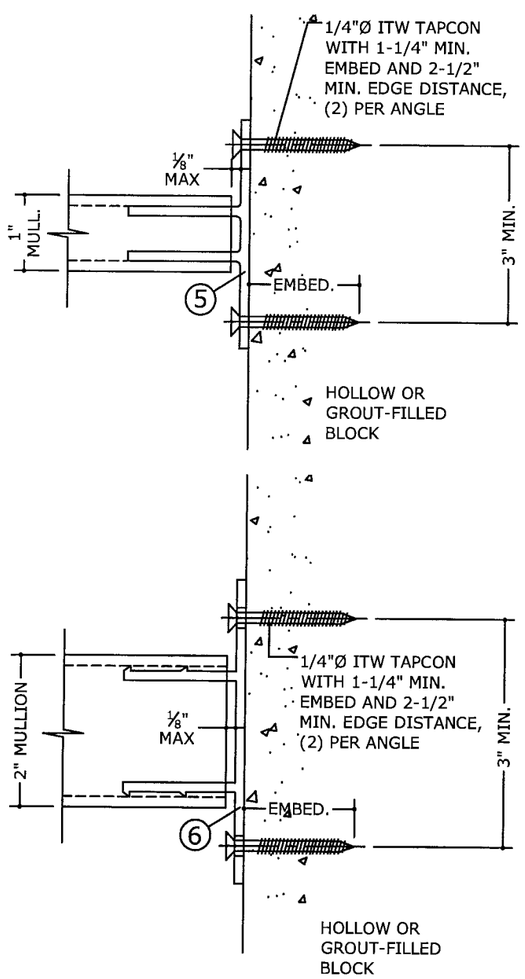

ANCHOR TYPE "C"

ALLOWABLE SHEAR CAPACITY = 1056 LBS

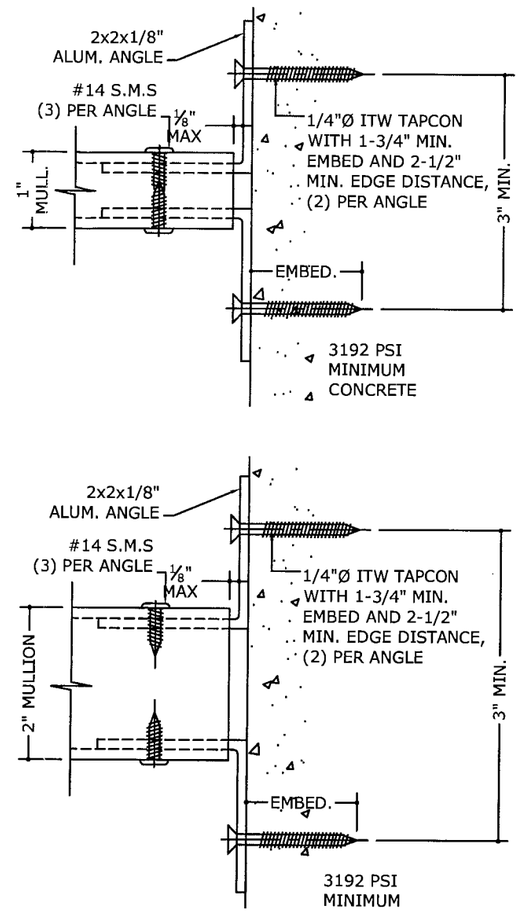

ANCHOR TYPE "D"

ALLOWABLE SHEAR CAPACITY = 1536 LBS

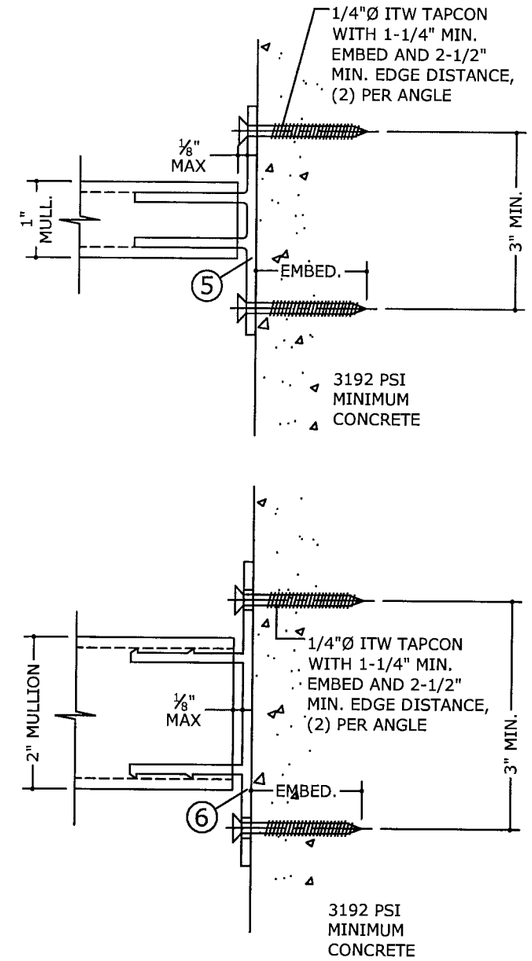

PROJECT REVISED
in complying with the Florida
Building Code
Acceptance No. 09-0624.07
Expiration Date JAN. 2, 2012
By Manuel Perez
Miami-Dade Product Control
Division

FRANK L. BENNARDO, P.E.
PE0046549
11/03/2009

ENGINEERING EXPRESS®
160 SW 12th AVENUE, #106
DEERFIELD BEACH, FL 33442
PH: (954) 354-0660 FAX: (954) 354-0443
WWW.ENGEXP.COM
CERT OF AUTH #9885
A FRANK L. BENNARDO, P.E., INC. INNOVATION

TRACO Windows & Doors Inc.
71 Progress Avenue, Cranberry Township, PA 16166
Tel. (724) 776-7000

ALUMINUM TUBE MULLIONS WITH STEEL REINFORCEMENT
LARGE MISSILE IMPACT RESISTANT
MIAMI-DADE NOTICE OF ACCEPTANCE

REMARKS	DRWN	CHKD	DATE
INIT ISSUE	CL	FLB	12/1/06
2007 FBC REVISION	KL	CL	02/10/09
BCCO COMMENTS	RKB	FLB	11/03/09
-	-	-	-
-	-	-	-

06-TRA-0005

SCALE: - 03

PAGE DESCRIPTION:
-
-

5

5

11/03/2009 - 4:53pm rbartlett F:\01 Project Files\Traco (TRA)\2006 Jobs\06-TRA-0005 Mullions with Steel Reinf. LMI (NOA)\06-TRA-0005_03a Mullions with Steel Reinf. LMI (NOA).dwg