MIAMI-DADE COUNTY
BUILDING CODE COMPLIANCE OFFICE (BCCO)
PRODUCT CONTROL DIVISION

MIAMI-DADE COUNTY, FLORIDA
METRO-DADE FLAGLER BUILDING

140 WEST FLAGLER STREET, SUITE 1603
MIAMI, FLORIDA 33130-1563
(305) 375-2901 FAX (305) 375-2908
www.miamidade.gov

NOTICE OF ACCEPTANCE (NOA)

Phoenix Architectural Products, Inc.
3075 Jonquil Drive SE
Smyrna, GA 30080

SCOPE:

This NOA is being issued under the applicable rules and regulations governing the use of construction materials. The documentation submitted has been reviewed by Miami-Dade County Product Control Division and accepted by the Board of Rules and Appeals (BORA) to be used in Miami Dade County and other areas where allowed by the Authority Having Jurisdiction (AHJ).

This NOA shall not be valid after the expiration date stated below. The Miami-Dade County Product Control Division (In Miami Dade County) and/or the AHJ (in areas other than Miami Dade County) reserve the right to have this product or material tested for quality assurance purposes. If this product or material fails to perform in the accepted manner, the manufacturer will incur the expense of such testing and the AHJ may immediately revoke, modify, or suspend the use of such product or material within their jurisdiction. BORA reserves the right to revoke this acceptance, if it is determined by Miami-Dade County Product Control Division that this product or material fails to meet the requirements of the applicable building code.

This product is approved as described herein, and has been designed to comply with the High Velocity Hurricane Zone of the Florida Building Code.

DESCRIPTION: "Sure guard plus 2007" Window Security Barrier System

APPROVAL DOCUMENT: Drawing No. SGP07-01, titled " Sure Guard Plus 2007 / Window Security Barrier System", sheets 1 through 8 of 8, prepared by V.M. Engineering, dated 05/26/2009, last revision #2 dated May 26, 2009, signed and sealed by Morgan Villanueva, P.E., bearing the Miami-Dade County Product Control Revision stamp with the Notice of Acceptance number and expiration date by Miami-Dade County Product Control Division.

MISSILE IMPACT RATING: Large and Small Missile Impact

LABELING: Each unit shall bear a permanent label with the manufacturer's name or logo, city, state and the following statement: "Miami-Dade County Product Control Approved", unless otherwise noted herein.

RENEWAL of this NOA shall be considered after a renewal application has been filed and there has been no change in the applicable building code negatively affecting the performance of this product.

TERMINATION of this NOA will occur after the expiration date or if there has been a revision or change in the materials, use, and/or manufacture of the product or process. Misuse of this NOA as an endorsement of any product, for sales, advertising or any other purposes shall automatically terminate this NOA. Failure to comply with any section of this NOA shall be cause for termination and removal of NOA.

ADVERTISEMENT: The NOA number preceded by the words Miami-Dade County, Florida, and followed by the expiration date may be displayed in advertising literature. If any portion of the NOA is displayed, then it shall be done in its entirety.

INSPECTION: A copy of this entire NOA shall be provided to the user by the manufacturer or its distributors and shall be available for inspection at the job site at the request of the Building Official.

This NOA **revises NOA #07-0403.07** and consists of this page 1, evidence submitted pages E-1 & E-2 as well as approval document mentioned above.

The submitted documentation was reviewed by **Helmy A. Makar, P.E., M.S.**

MIAMI-DADE COUNTY APPROVED

Helmy A. Makar
03/24/2010

NOA No. 09-0701.02
Expiration Date: 08/02/2012
Approval Date: 03/24/2010

Phoenix Architectural Products, Inc.

NOTICE OF ACCEPTANCE: EVIDENCE SUBMITTED

1. EVIDENCE SUBMITTED UNDER PREVIOUS APPROVAL #07-0403.07

A. DRAWINGS

1. *Drawing No. SGP07-01, titled " Sure Guard Plus 2007 / Window Security Barrier System", sheets 1 through 8 of 8, prepared by V.M. Engineering, dated 03/01/2007, last revision #1 dated June 22, 2007, signed and sealed by Morgan Villanueva, P.E.*

B. TESTS

1. *Test report on Large Missile Impact Test, Cyclic Wind Pressure Test and Uniform Static Air Pressure Test of 304 Stainless Steel perforated panel window security barrier system, prepared by Fenestration Testing Laboratory, Inc., Report No. 5118, dated November 29, 2006, signed and sealed by Edmundo Largaespada, P.E.*
2. *Test report on Large Missile Impact Test, Cyclic Wind Pressure Test and Uniform Static Air Pressure Test of 304 Stainless Steel perforated panel window security barrier system, prepared by Fenestration Testing Laboratory, Inc., Report No. 5196, dated March 08, 2007, signed and sealed by Michael Wenzel, P.E. and Carlos S. Rionda, P.E.*

C. CALCULATIONS

1. *Anchor calculations dated March 26, 2007, 22 pages, prepared by V.M. Engineering, signed and sealed by Morgan Villanueva, P.E.*

D. QUALITY ASSURANCE

1. *By Miami-Dade County Building Code Compliance Office.*

E. MATERIAL CERTIFICATIONS

1. *Mill Certified Inspection Report issued by North American Stainless, Inc., dated August 19, 2004, with chemical analysis and mechanical properties for 304 Stainless Steel Wire Mesh.*

2. NEW EVIDENCE SUBMITTED

A. DRAWINGS

1. *Drawing No. SGP07-01, titled " Sure Guard Plus 2007 / Window Security Barrier System", sheets 1 through 8 of 8, prepared by V.M. Engineering, dated 05/26/2009, last revision #2 dated May 26, 2009, signed and sealed by Morgan Villanueva, P.E.*

B. TESTS

1. *None.*

Helmy A. Makar, M.S., P.E.
Senior Product Control Examiner
NOA No. 09-0701.02
Expiration Date: 08/02/2012
Approval Date: 03/24/2010

C. CALCULATIONS

1. None.

D. QUALITY ASSURANCE

1. By Miami-Dade County Building Code Compliance Office.

E. MATERIAL CERTIFICATIONS

1. None.

Helmy A. Makar, M.S., P.E.
Senior Product Control Examiner
NOA No. 09-0701.02
Expiration Date: 08/02/2012
Approval Date: 03/24/2010

GENERAL NOTES FOR NOA SCREEN

1. THIS SCREEN SHUTTER **"SURE GUARD PLUS 2007"** HAS BEEN VERIFIED IN ACCORDANCE WITH SECTION 1609.1.2 OF THE FLORIDA BUILDING CODE 2007 AND AS PER TAS-201-94, TAS 202-94 AND TAS 203-94 OF THE TEST PROTOCOLS FOR HIGH VELOCITY HURRICANES ZONES, AND AS PER AMERICAN TESTING LABORATORY WITH TEST REPORT NO. 5118 AND NO. 5196.

IN ORDER TO VERIFY THAT THE ANCHORS ON THIS PRODUCT APPROVAL DOCUMENT, AS TESTED, WERE NOT OVER STRESSED, A 33% INCREASE IN ALLOWABLE STRESS FOR WIND LOADS WAS NOT USED IN THEIR ANALYSIS.

THE **"SURE GUARD PLUS 2007"** IS ADEQUATE FOR IMPACT AND FATIGUE RESISTANCE SHOWN IN THE TEST RESULTS FROM LABORATORY, THAT MEANS THAT THIS SCREEN SHUTTER MAY BE INSTALLED AT HIGH VELOCITY HURRICANE ZONES.

2. ALL COMPONENTS SHALL BE AS PER BILL OF MATERIALS AS SHOWN ON SHEET 3 OF 8.

3. FOR ANCHORS INSTALLATION AND SPACING DETAILS REFER TO SHEETS 6 THROUGH 8 OF 8.

4. MAX DESIGN PRESSURE:
   A. FOR BARRIER FRAME SIZE OF 55" X 98" = +100 psf, -144 psf
   B. FOR BARRIER FRAME SIZE OF 64" X 124" = ± 110 psf

5. SELF DRILLING SCREWS SHALL BE ASTM A510-03, ZINC PLATED AS PER ASTM B-633 WITH MIN. TENSILE STRENGTH OF 100 KSI.

6. PRODUCT ANCHORS SHALL BE AS LISTED AND SPACED AS SHOWN ON DETAILS ON SHEETS 3, 6, 7 & 8. ANCHOR EMBEDMENT AND EDGE DISTANCE TO BASE MATERIAL SHALL BE BEYOND WALL DRESSING OR STUCCO.

7. A LABEL SHALL BE PLACED FOR EVERY OPENING BY THE SCREEN SHUTTER MANUFACTURER AND SHALL BE EXPOSED ON THE SURFACE OF THE FRAME LABEL SHALL READ:

PHOENIX ARCHITECTURAL PRODUCT
ATLANTA GA
MIAMI-DADE COUNTY PRODUCT CONTROL APPROVED

8. CONTRACTOR SHALL VERIFY THE EXISTING CONDITIONS OF THE OPENINGS WHERE SCREEN SHUTTER WILL BE INSTALLED TO INSURE ADEQUATE SUBSTRATE.

9. THE INSTALLATION OF THIS **"SURE GUARD PLUS 2007"** HIGH VELOCITY SHUTTER SYSTEM SHALL COMPLY WITH THE SPECIFICATIONS INDICATED IN THIS DRAWINGS PLUS ANY BUILDING AND ZONING REGULATIONS PROVIDED BY THE JURISDICTION WHERE PERMIT IS APPLIED TO.

10. THIS PRODUCT APPROVAL DOCUMENTS WILL BE VALID ONLY WHEN IT MEETS THE FOLLOWING TERMS:
   A. PLANS SHALL BE SIGNED AND SEALED BY THE ENGINEER OF RECORD.
   B. NO MODIFICATIONS AND/OR ALTERATIONS MAY BE MADE BY ANY MEANS.

11. THIS PRODUCT APPROVAL DOCUMENTS WAS NOT PREPARED FOR A SPECIFIC SITE.

12. SCREEN SHUTTER DETAILS:
   A. FRAME SHALL BE EXTRUDED ALUMINUM, CORNERS ARE MITERED BULTED AND WELDED INCLUDING MID HEIGHT RAIL CONNECTION TO JAMBS WELDING AS PER AMERICAN WELDING SOCIETY D1.2 LATEST EDITION.

   B. EACH PANEL IS MADE UP OF EXTRUDED ALUMINUM 6063-T6. FRAME MITERED AND ADDITIONALLY JOINED AT THE CORNERS WITH ALUMINUM PLATE (COMPONENT 17) AS SHOWN ON SHEET 2 OF 8.

   C. SCREEN SHALL BE STAINLESS STEEL 14 GA. (0.075" THICKNESS) AISI 304 SERIES PER ASTM A240, WITH MIN. YIELD STRENGTH OF 40.000 PSI. THE PERFORATED SCREEN HAS CLEAR HOLES (0.1875"ø) SPACED AT 0.25" CENTER TO CENTER STAGGERED. IN ONE INCH SQUARE ARE 16 HOLES WHICH MEANS 44% OF SCREEN IS POUROUS.

   D. FOR FASTENING OF SCREEN REFER TO NOTE 1 OF SHEET 3, MINIMUM EDGE DISTANCE PER FASTENING SCREW/EDGE OF SCREEN IS 1/2" FROM CENTER OF HOLES.

   E. THE OPERABLE PANELS ARE SECURED WITH A CONTINUOUS CIE-8 (COMPONENT 11) PLUS A SURFACE BOLT AND STRIKE PLATE (COMPONENT 20) AS SHOWN ON SHEET 5 OF 8.

PRODUCT REVISED
as complying with the Florida Building Code
Acceptance No 09-0701.02
Expiration Date 08/02/2012
By
Miami Dade Product Control Division

MIAMI-DADE COUNTY

PHOENIX ARCHITECTURAL PRODUCTS, INC.
SECURITY BARRIERS, ALUMINUM WINDOWS & DOORS
3075 JONQUIL Drive. S.E., Smyrna, GA 30080
TEL 770.803.6380 FAX 770.803.6388
www.phoenixwindows.com

PRODUCT:
SURE GUARD PLUS 2007
WINDOW SECURITY BARRIER SYSTEM

V.M. Engineering, Inc.
C. of A. No. 27633
11278 S.W. 153rd Place
MIAMI, FLORIDA 33196
TEL: 786-281-6968
TEL: 305-383-5896

03/01/10
MORGAN VILLANUEVA, P.E.
STRUCTURAL ENGINEER
FLORIDA LIC. NO.: 60292

REV. No	DESCRIPTION	DATE
1	GENERAL	6-22-07
2	RENEWAL AS PER FBC 2007	5-26-09
4	-	-
5	-	-

SCALE: AS SHOWN
DATE: 5-26-09
F.B.C.
(High Velocity Hurricane Zone)
DWG No: SGP07-01
SHEET 1 OF 8

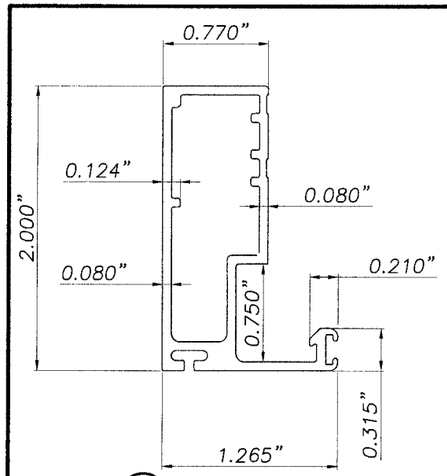

(2) CIE-3

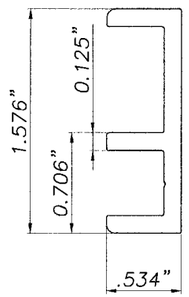

(18) CIE-13

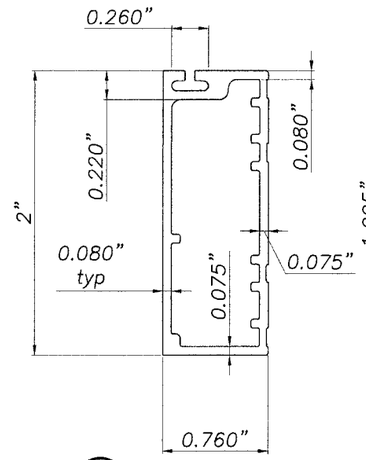

(7) CIE-6

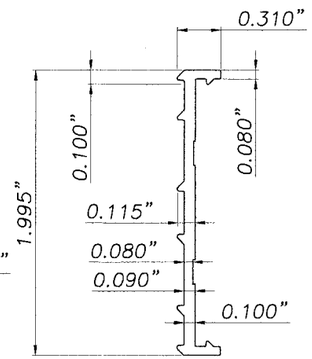

(16) CIE-7

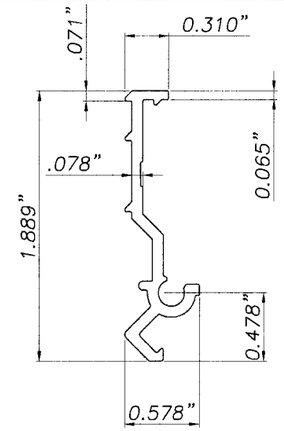

(4) CIE-4

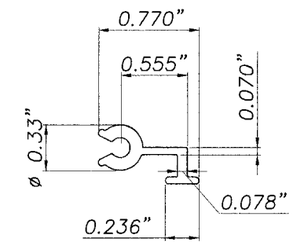

(15) CIE-1

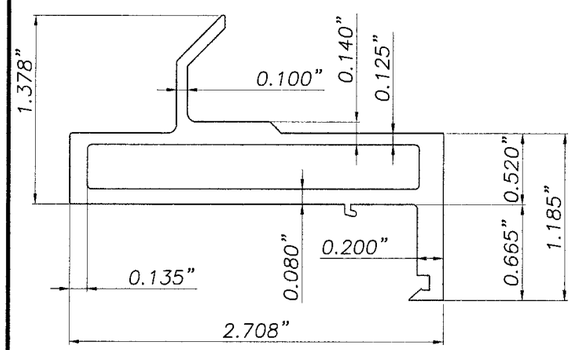

(6) CIE-12

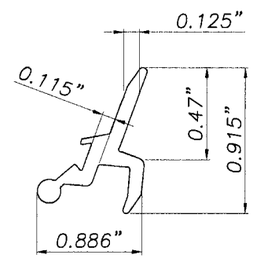

(11) CIE-8

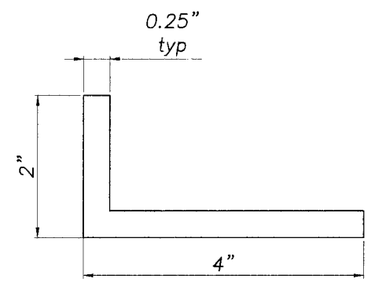

(12) "L BAR"

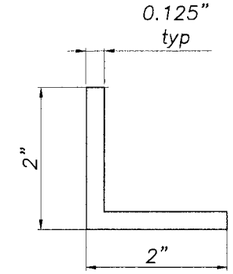

(13) "L BAR"

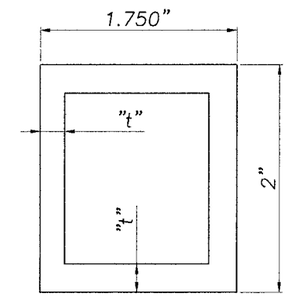

(8) EXT. ALUM. TUBE

"t"	MULLION SPAN
1/8"	< 98"
1/4"	>98"<124"

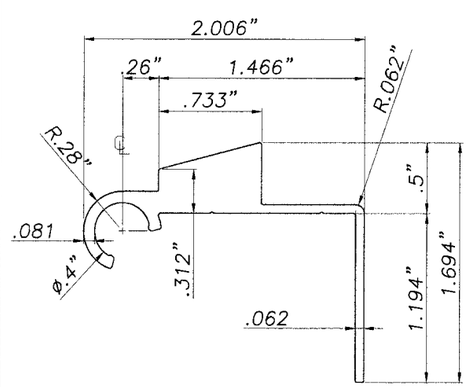

(10) CIE-5

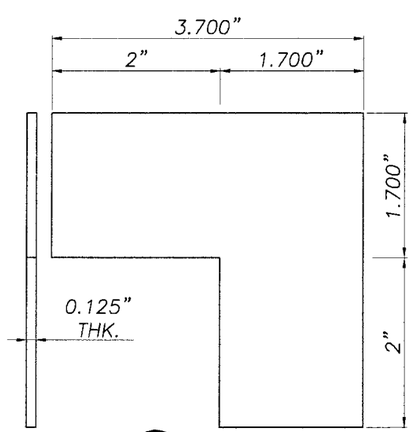

(17) SP-7

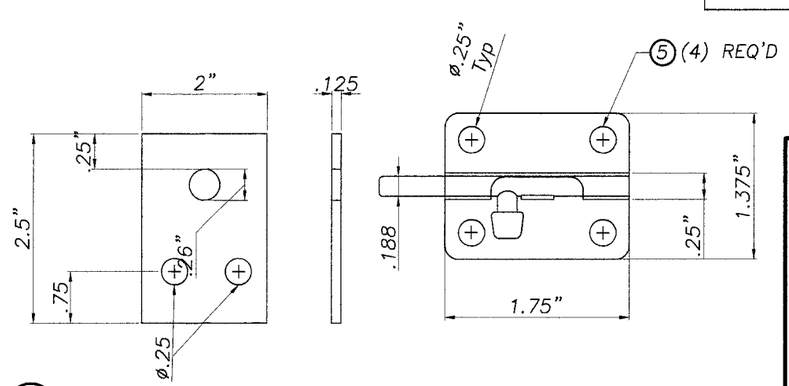

(20) SURFACE BOLT & STEEL STRIKE PLATE

PRODUCT REVISED
as complying with the Florida
Building Code
Acceptance No 09-0701.02
Expiration Date 08/02/2012
By Helena A. Melo
Miami Dade Product Control
Division

MIAMI-DADE COUNTY

PHOENIX
ARCHITECTURAL PRODUCTS, INC.
SECURITY BARRIERS, ALUMINUM WINDOWS & DOORS
3075 JONQUIL Drive, S.E., Smyrna, GA 30080
TEL 770.803.6380 FAX 770.803.6388
www.phoenixwindows.com

PRODUCT: SURE GUARD PLUS 2007
WINDOW SECURITY BARRIER SYSTEM

V.M. Engineering, Inc.
C. of A. No. 27633
11278 S.W. 153rd Place
MIAMI, FLORIDA 33196
TEL: 786-281-6968
TEL: 305-383-5896

05/01/10
MORGAN VILLANUEVA, P.E.
STRUCTURAL ENGINEER
FLORIDA LIC. NO.: 60292

REV. No	DESCRIPTION	DATE
1	GENERAL	6-22-07
2	RENEWAL AS PER FBC 2007	5-26-09
4	-	-
5	-	-

SCALE: AS SHOWN
DATE: 5-26-09

F.B.C.
(HIgh Velocity Hurricane Zone)

DWG No: SGP07-01

SHEET 2 OF 8

METAL TO METAL SCREWS NOTES

NOTE: 1

FOUR SCREWS IN EACH CORNER LEG 4" FROM EA. END AND (3) SPACED 2" O.C., THEN CONTINUOUS 6" O.C..

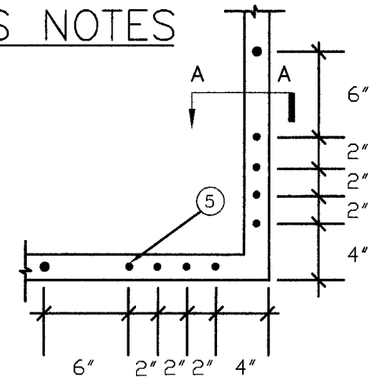

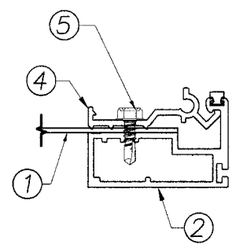

SECTION A–A

NOTE: 3

SCREWS 6" O.C. STAGGERED, SPACED 2.5" MAX. FROM TOP & BOTTOM.

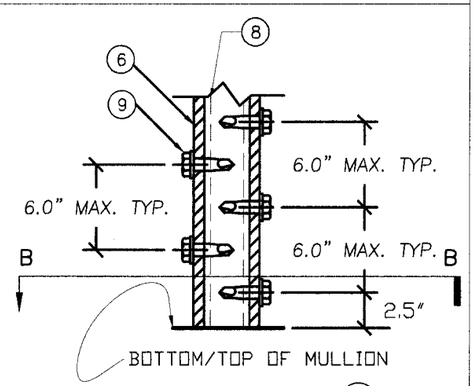

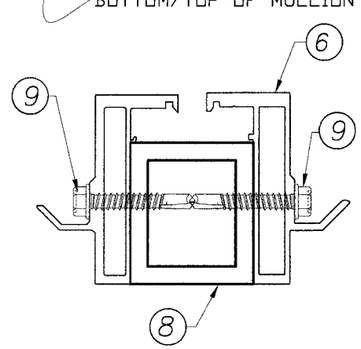

SECTION B–B

BILL OF MATERIALS

ITEM	DESCRIPTION	MATERIAL MANUFACTURER
1	Perforated Screen (Stainless Steel)	14 GA Stainless Steel
2	Sash Frame CIE–3	Alum. 6063–T6
3	Weather–strip #568 .25" (Hope Webbing)	Wool Pyle
4	Securing Flange CIE–4	Alum. 6063–T6
5	#10x5/8" S.D.S. Hex Head Screw	ASTM A–510
6	Frame Jamb CIE–12	Alum. 6063–T6
7	Horizontal Sash Support CIE–6	Alum. 6063–T6
8	1 3/4"x2"x1/8" Alum Mullion For 98" Barrier Height 1 3/4"x2"x1/4" Alum. Mullion for Barrier greater than 98" height up to 124" height	Alum. 6063–T6
9	#14x1 1/2" Self Drinling Screw	ASTM A–510
10	Hinge Flange CIE–5	Alum. 6063–T6
11	Latch Mechanism CIE–8	Alum. 6063–T6
12	4"x2"x1/4" Alum. Angle	Alum. 6063–T6
13	2"x2"x1/8" Alum. Angle	Alum. 6063–T6
14	1/4" ø Tapcon Anchor (min 1 1/4" embed. to block & 1 3/4" to concrete)	ITW BUILDEX
15	HINGE CIE–1	Alum. 6063–T6
16	HORIZONTAL SASH RETAINER CIE–7	Alum. 6063–T6
17	CORNER SUPPORT SP–7	Alum. 3003–H14
18	SASH SUPPORT CIE–13	Alum. 6063–T6
19	#10x1" S.D.S. Hex Head Screw	ASTM A–510
20	SURFACE BOLT & STEEL PLATE	BRAINERD MFG. CO. MODEL # B5210

PHOENIX ARCHITECTURAL PRODUCTS, INC.
SECURITY BARRIERS, ALUMINUM WINDOWS & DOORS
3075 JONQUIL Drive. S.E., Smyrna, GA 30080
TEL 770.803.6380 FAX 770.803.6388
www.phoenixwindows.com

PRODUCT: SURE GUARD PLUS 2007
WINDOW SECURITY BARRIER SYSTEM

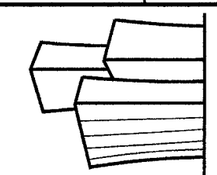

V.M. Engineering, Inc.
C. of A. No. 27633
11278 S.W. 153rd Place
MIAMI, FLORIDA 33196
TEL: 786–281–6968
TEL: 305–383–5896

MORGAN VILLANUEVA, P.E.
STRUCTURAL ENGINEER
FLORIDA LIC. NO.: 60292

REV. No	DESCRIPTION	DATE
1	GENERAL	6–22–07
2	RENEWAL AS PER FBC 2007	5–26–09
4	–	–
5	–	–

SCALE: AS SHOWN
DATE: 5–26–09

F.B.C.
(HIgh Velocity Hurricane Zone)

DWG No: SGP07–01

SHEET 3 OF 8

PRODUCT REVISED
as complying with the Florida Building Code
Acceptance No 09-0701.02
Expiration Date 08/02/2012
By
Miami Dade Product Control Division

MIAMI–DADE COUNTY

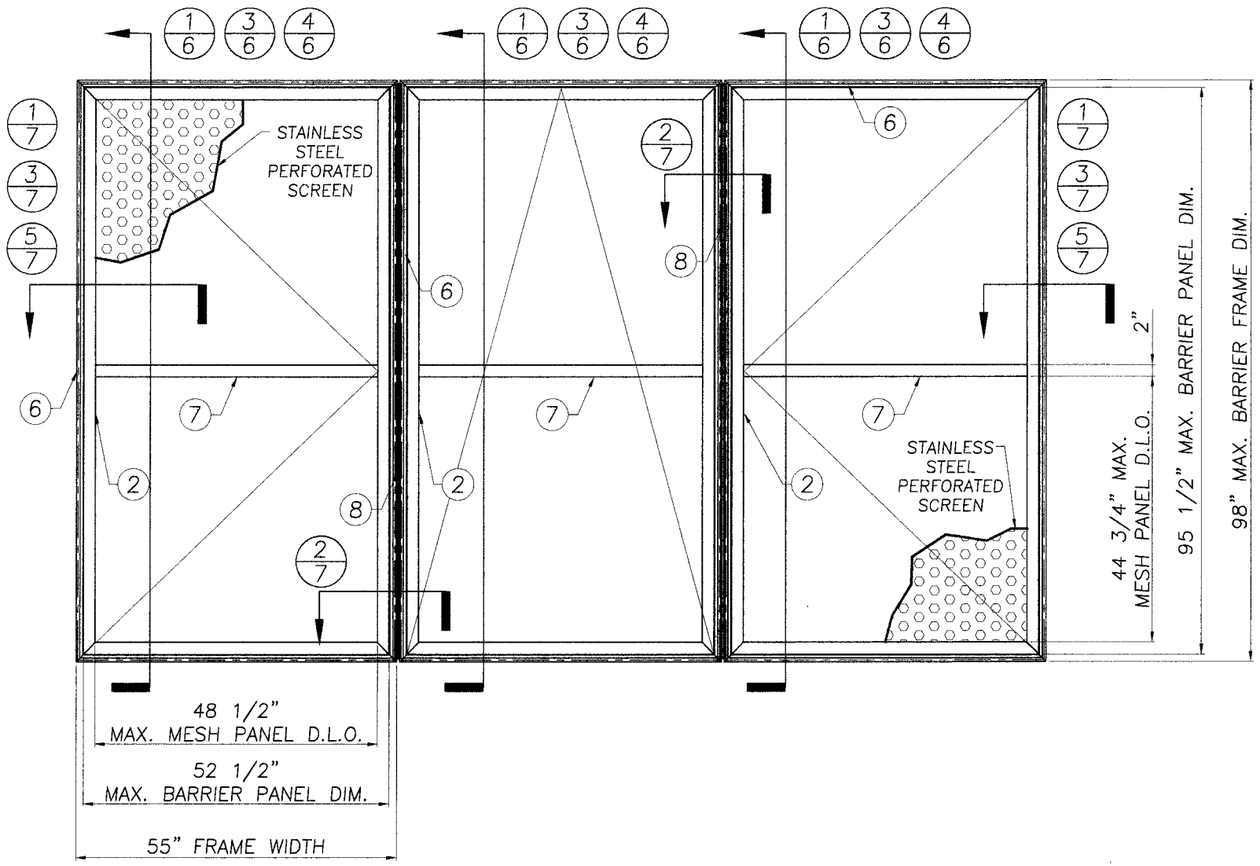

MULTIPLE PANEL ELEVATION
(55"x98" MAX. BARRIER FRAME)

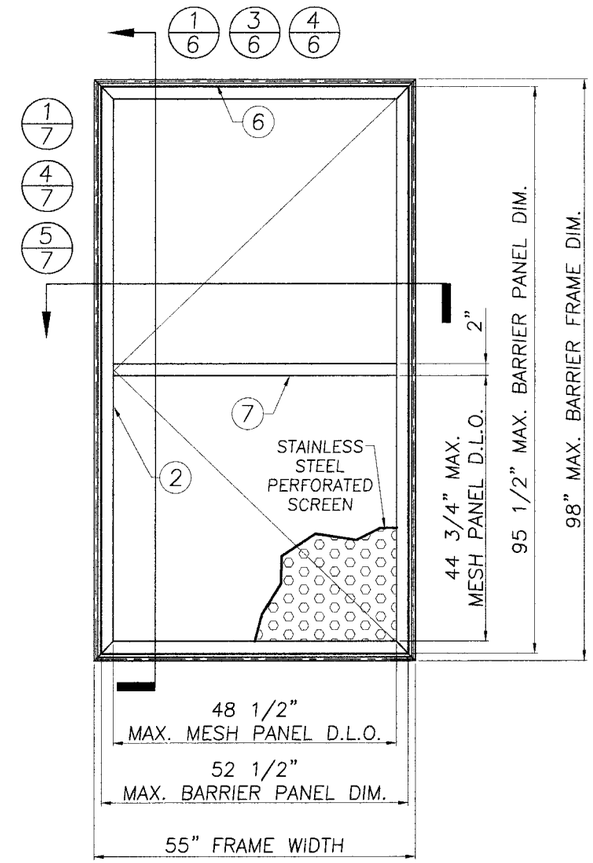

SINGLE PANEL ELEVATION
(55"x98" MAX. BARRIER FRAME)

DESIGN PRESSURE RATING:
POSITIVE 100 psf NEGATIVE 144 psf
TESTED AS PER TAS 201, 202, 203 IMPACT MISSILE (80 ft/sec)

NOTE: BARRIER SCREENS MAY BE USED AS SINGLE OR UNLIMITED NUMBER OF HORIZONTAL OR VERTICAL PANELS.

PRODUCT REVISED
as complying with the Florida Building Code
Acceptance No 09-0701.02
Expiration Date 08/02/2012
By Helena A. Molina
Miami Dade Product Control Division

MIAMI-DADE COUNTY

PHOENIX ARCHITECTURAL PRODUCTS, INC.
SECURITY BARRIERS, ALUMINUM WINDOWS & DOORS
3075 JONQUIL Drive, S.E., Smyrna, GA 30080
TEL 770.803.6380 FAX 770.803.6388
www.phoenixwindows.com

PRODUCT:
SURE GUARD PLUS 2007
WINDOW SECURITY BARRIER SYSTEM

V.M. Engineering, Inc.
C. of A. No. 27633
11278 S.W. 153rd Place
MIAMI, FLORIDA 33196
TEL: 786-281-6968
TEL: 305-383-5896

05/01/10
MORGAN VILLANUEVA, P.E.
STRUCTURAL ENGINEER
FLORIDA LIC. NO.: 60292

REV. No	DESCRIPTION	DATE
1	GENERAL	6-22-07
2	RENEWAL AS PER FBC 2007	5-26-09
4	-	-
5	-	-

SCALE: AS SHOWN
DATE: 5-26-09
F.B.C.
(High Velocity Hurricane Zone)
DWG No: SGP07-01
SHEET 4 OF 8

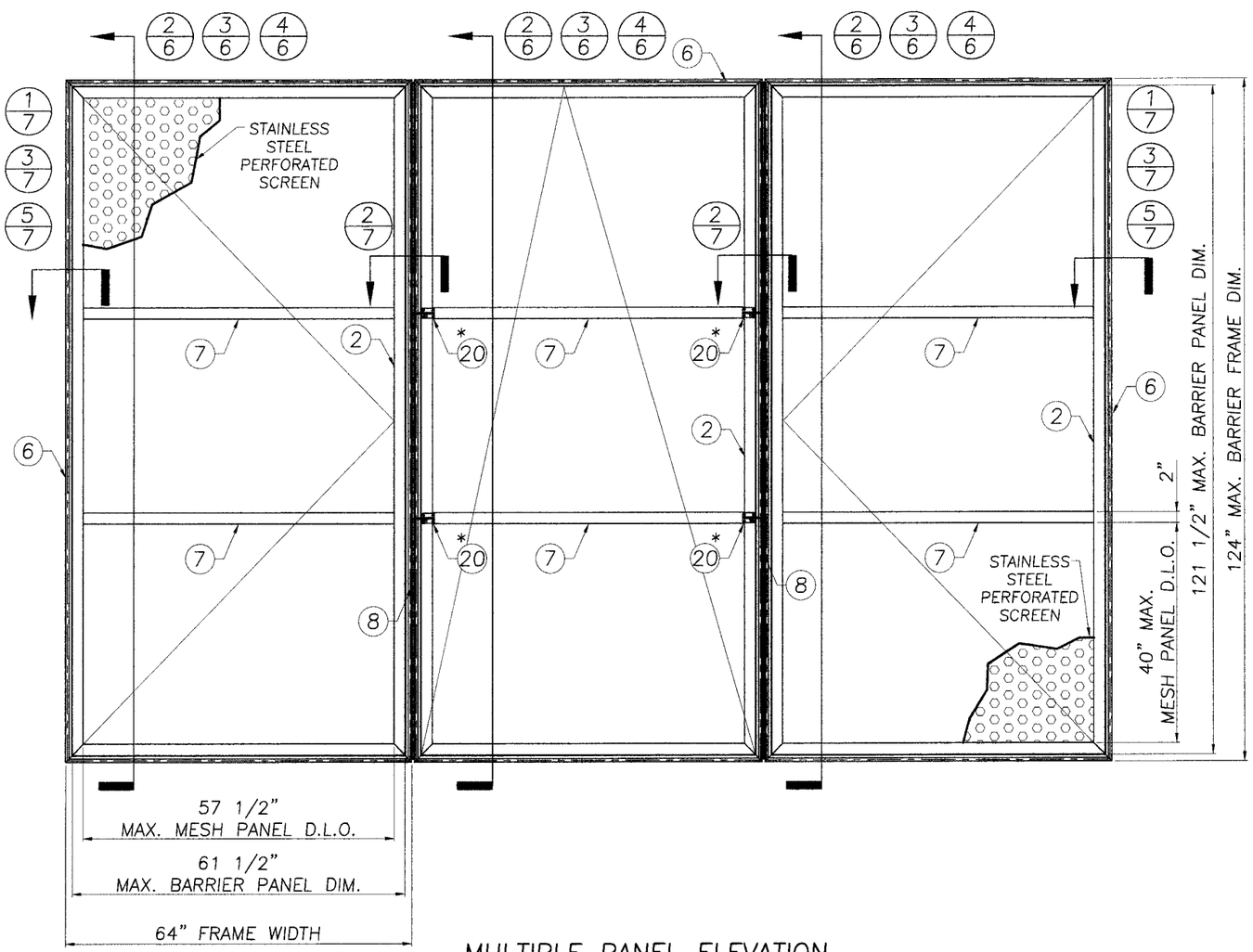

MULTIPLE PANEL ELEVATION
(64"x124" MAX. BARRIER FRAME)

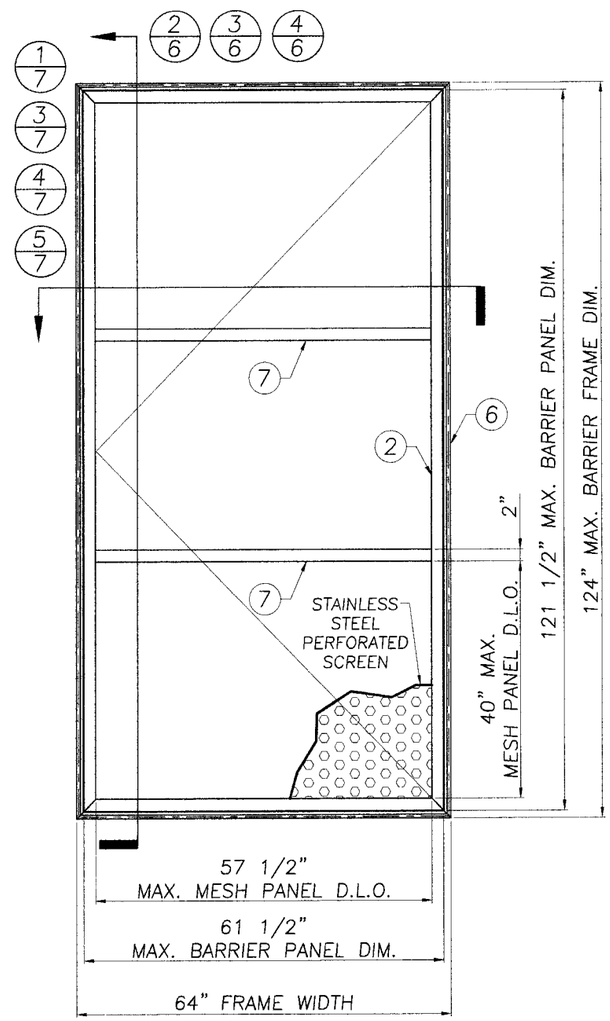

SINGLE PANEL ELEVATION
(64"x124" MAX. BARRIER FRAME)

DESIGN PRESSURE RATING:
POSITIVE 110 psf NEGATIVE 110 psf
TESTED AS PER TAS 201, 202, 203
IMPACT MISSILE (50 ft/sec)

NOTE: BARRIER SCREENS MAY BE USED AS SINGLE OR UNLIMITED NUMBER OF HORIZONTAL OR VERTICAL PANELS.

* USE ONE PAIR OF SURFACE BOLT 20 AT TOP OR BOTTOM SASH AS SHOWN FOR TOP HINGE BARRIERS ONLY WITH MORE THAN 98" HEIGHT.

PRODUCT REVISED
as complying with the Florida Building Code
Acceptance No 09-0701.02
Expiration Date 08/02/2012
By
Miami Dade Product Control Division

MIAMI-DADE COUNTY

PHOENIX ARCHITECTURAL PRODUCTS, INC.
SECURITY BARRIERS, ALUMINUM WINDOWS & DOORS
3075 JONQUIL Drive, S.E., Smyrna, GA 30080
TEL 770.803.6380 FAX 770.803.6388
www.phoenixwindows.com

PRODUCT:
SURE GUARD PLUS 2007
WINDOW SECURITY BARRIER SYSTEM

V.M. Engineering, Inc.
C. of A. No. 27633
11278 S.W. 153rd Place
MIAMI, FLORIDA 33196
TEL: 786-281-6968
TEL: 305-383-5896

03/01/10
MORGAN VILLANUEVA, P.E.
STRUCTURAL ENGINEER
FLORIDA LIC. NO.: 60292

REV. No	DESCRIPTION	DATE
1	GENERAL	6-22-07
2	RENEWAL AS PER FBC 2007	5-26-09
4	-	-
5	-	-

SCALE: AS SHOWN
DATE: 5-26-09
F.B.C.
(High Velocity Hurricane Zone)
DWG No: SGP07-01
SHEET 5 OF 8

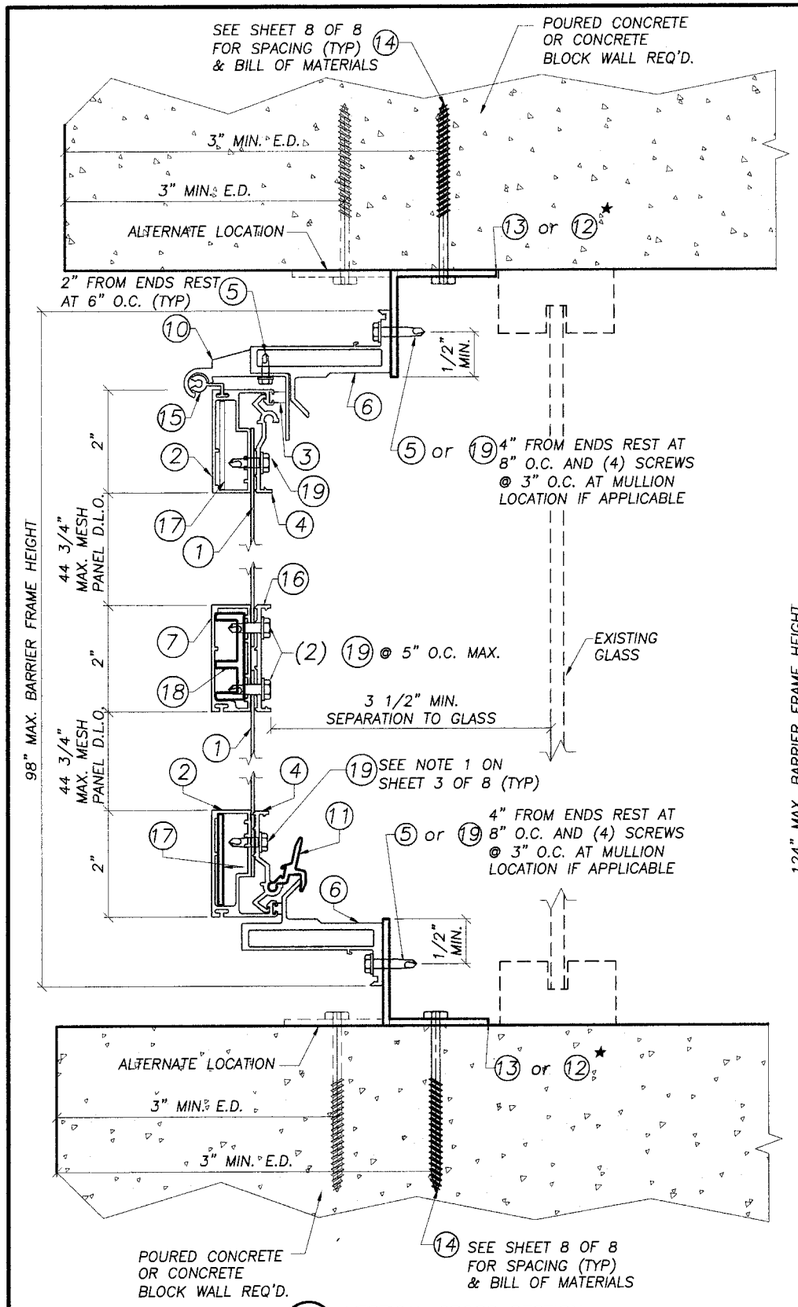

1 VERTICAL CROSS SECTION
Side/Top Hinge

★ USE COMPONENT 13. FOR MORE BUILD OUT USE COMPONENT 12

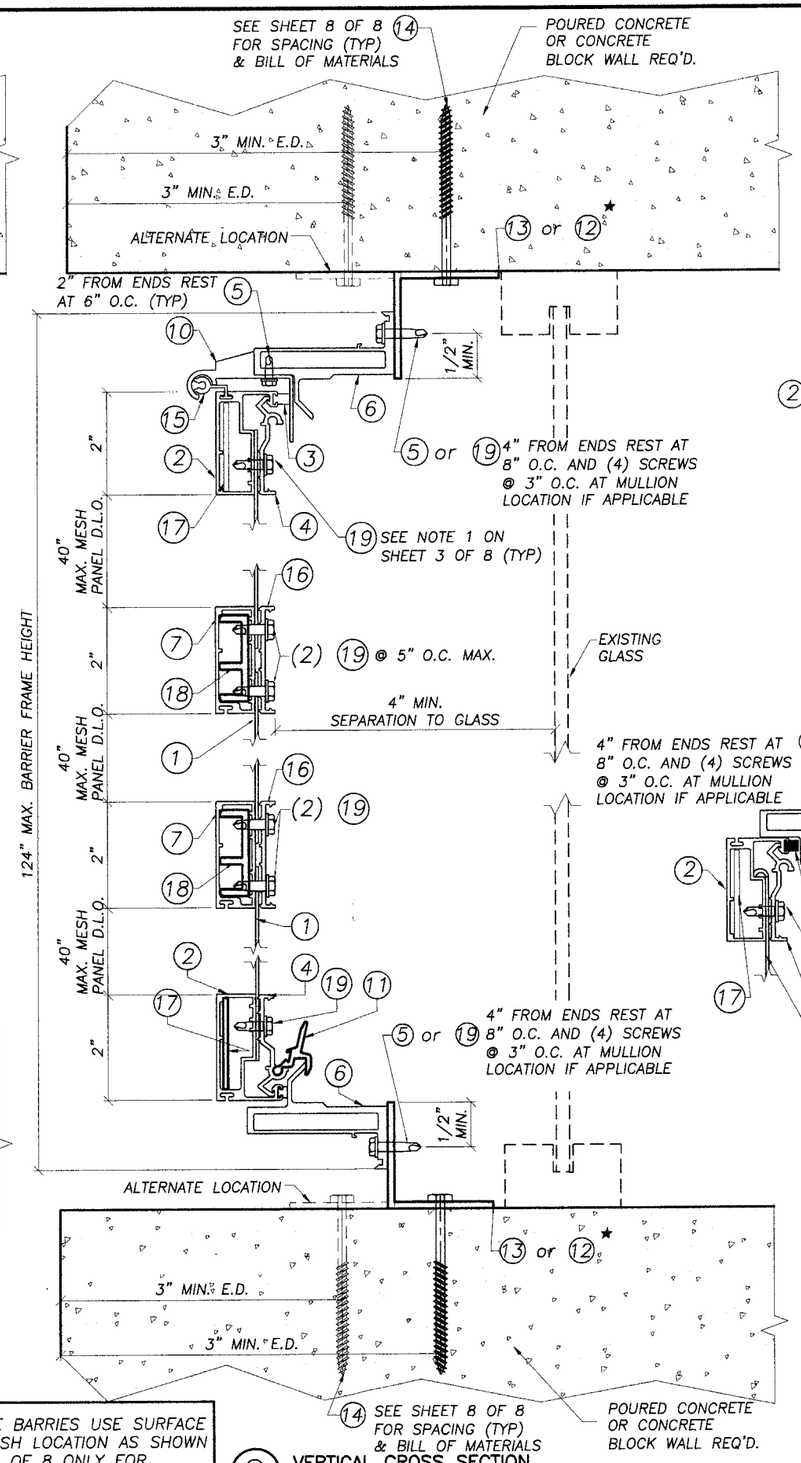

2 VERTICAL CROSS SECTION
Side/Top* Hinge

* TOP HINGE BARRIES USE SURFACE BOLTS @ SASH LOCATION AS SHOWN ON SHEET 5 OF 8 ONLY FOR BARRIES GREATER THAN 55"X98"

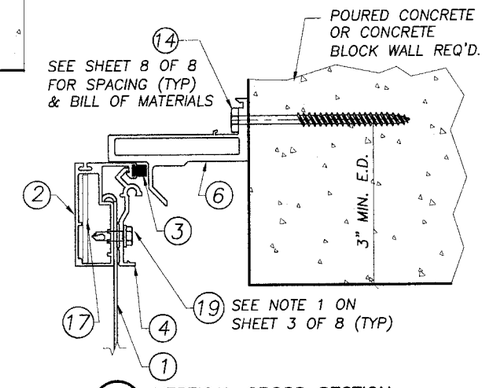

3 VERTICAL CROSS SECTION
Optional Surface Mount Method
Side/Top Hinge

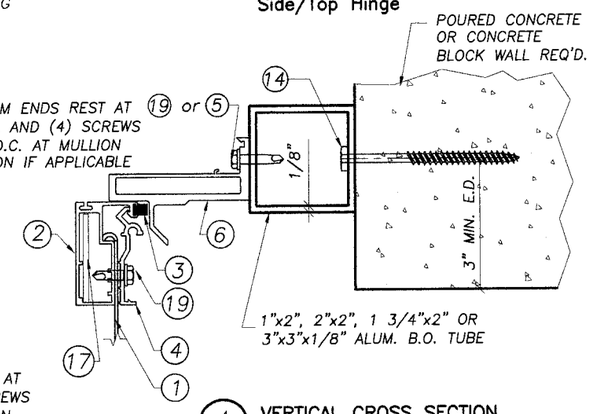

4 VERTICAL CROSS SECTION
Optional Buildout Mount Method
Side/Top Hinge

PRODUCT REVISED
as complying with the Florida Building Code
Acceptance No 09-0701.02
Expiration Date 08/02/2012
By Miami Dade Product Control Division

MIAMI-DADE COUNTY

PHOENIX ARCHITECTURAL PRODUCTS, INC.
SECURITY BARRIERS, ALUMINUM WINDOWS & DOORS
3075 JONQUIL Drive. S.E., Smyrna, GA 30080
TEL 770.803.6380 FAX 770.803.6388
www.phoenixwindows.com

PRODUCT: SURE GUARD PLUS 2007
WINDOW SECURITY BARRIER SYSTEM

V.M. Engineering, Inc.
C. of A. No. 27633
11278 S.W. 153rd Place
MIAMI, FLORIDA 33196
TEL: 786-281-6968
TEL: 305-383-5896

03/01/10
MORGAN VILLANUEVA, P.E.
STRUCTURAL ENGINEER
FLORIDA LIC. NO.: 60292

REV. No	DESCRIPTION	DATE
1	GENERAL	6-22-07
2	RENEWAL AS PER FBC 2007	5-26-09
4	-	-
5	-	-

SCALE: AS SHOWN
DATE: 5-26-09

F.B.C.
(High Velocity Hurricane Zone)

DWG No: SGP07-01

SHEET 6 OF 8

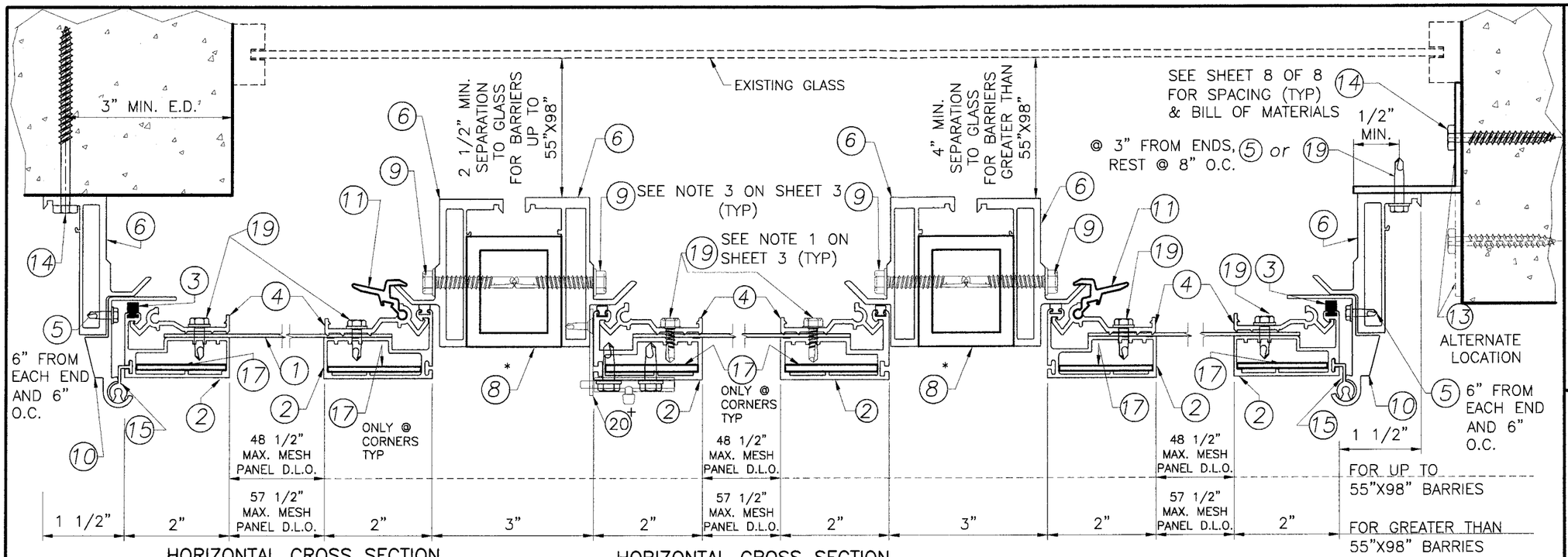

1 HORIZONTAL CROSS SECTION
MULTIPLE/SINGLE PANELS
Side Hinge – Wall Mounted

2 HORIZONTAL CROSS SECTION
MULTIPLE/SINGLE PANELS
Top Hinge – Intermediate Barrier

3 HORIZONTAL CROSS SECTION
MULTIPLE/SINGLE PANELS
Side Hinge – Trapped Barrier

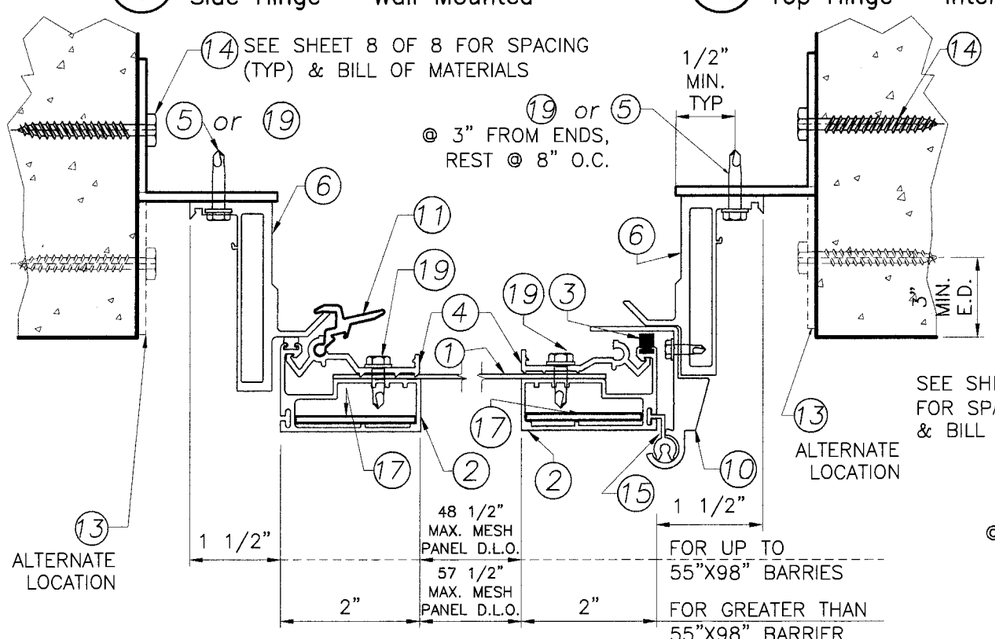

4 HORIZONTAL CROSS SECTION
SINGLE PANEL
Side/Top Hinge – Trapped Barrier

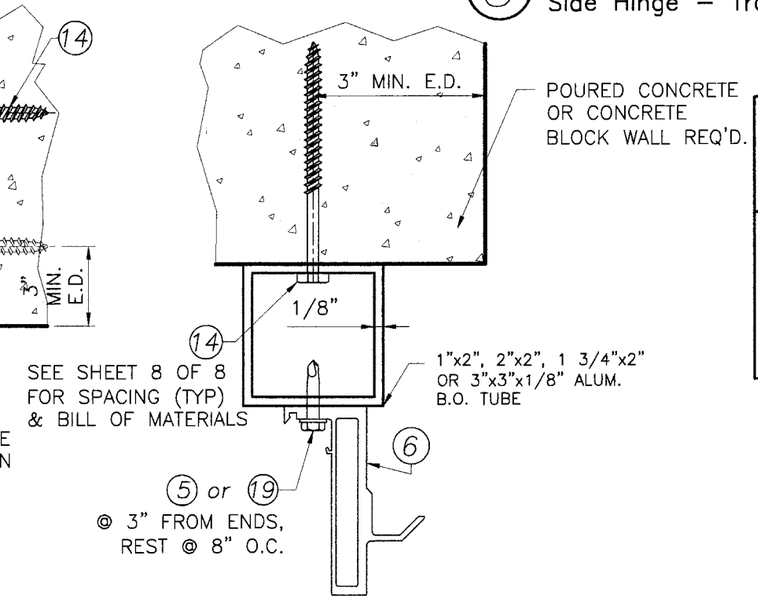

5 HORIZONTAL CROSS SECTION
Optional Buildout Mount Method
Side/Top Hinge

+ USE (20) ONLY FOR BARRIER GREATER THAN 55"X98" FRAME SIZE AND TOP HINGE SEE SHEET 5 FOR LOCATION

* USE (8) W/1/8" THICKNESS FOR BARRIERS UP TO 55"X98" FRAME SIZE AND USE (8) W/ 1/4" THICKNESS FOR BARRIERS GREATER THAN 55"X98" FRAME SIZE

PRODUCT REVISED
as complying with the Florida Building Code
Acceptance No 09-0701.02
Expiration Date 08/02/2012
By
Miami Dade Product Control Division

MIAMI–DADE COUNTY

PHOENIX ARCHITECTURAL PRODUCTS, INC.
SECURITY BARRIERS, ALUMINUM WINDOWS & DOORS
3075 JONQUIL Drive. S.E., Smyrna, GA 30080
TEL 770.803.6380 FAX 770.803.6388
www.phoenixwindows.com

PRODUCT:
SURE GUARD PLUS 2007
WINDOW SECURITY BARRIER SYSTEM

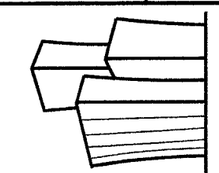

V.M. Engineering, Inc.
C. of A. No. 27633
11278 S.W. 153rd Place
MIAMI, FLORIDA 33196
TEL: 786-281-6968
TEL: 305-383-5896

03/01/10
MORGAN VILLANUEVA, P.E.
STRUCTURAL ENGINEER
FLORIDA LIC. NO.: 60292

REV. No	DESCRIPTION	DATE
1	GENERAL	6-22-07
2	RENEWAL AS PER FBC 2007	5-26-09
4	-	-
5	-	-

SCALE: AS SHOWN
DATE: 5-26-09
F.B.C.
(High Velocity Hurricane Zone)
DWG No: SGP07-01
SHEET 7 OF 8

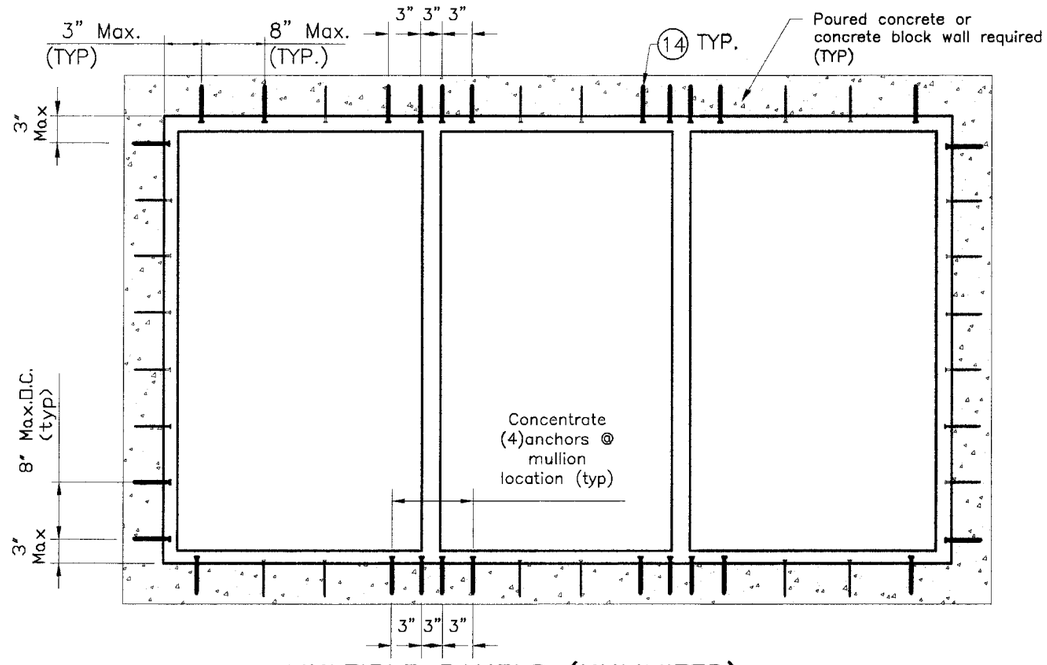

MULTIPLE PANELS (UNLIMITED)

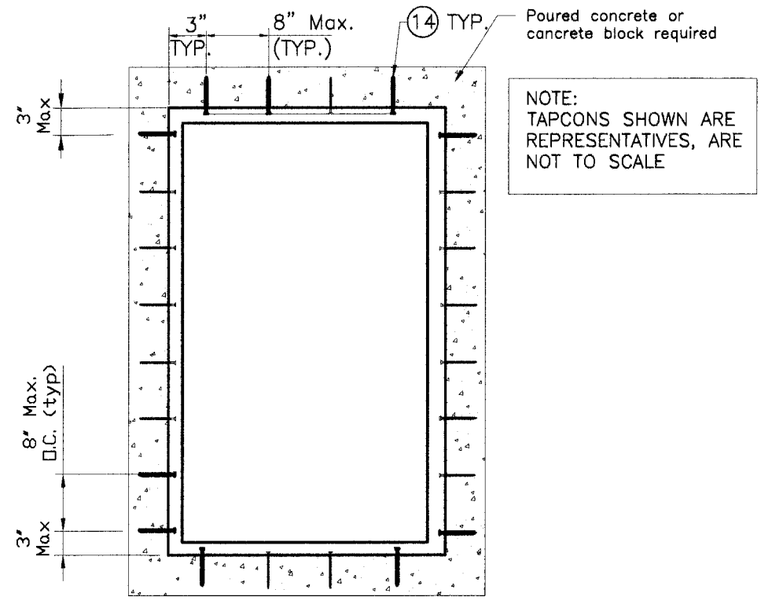

NOTE:
TAPCONS SHOWN ARE REPRESENTATIVES, ARE NOT TO SCALE

SINGLE PANEL

ANCHORAGE FOR INSIDE MOUNTINGS

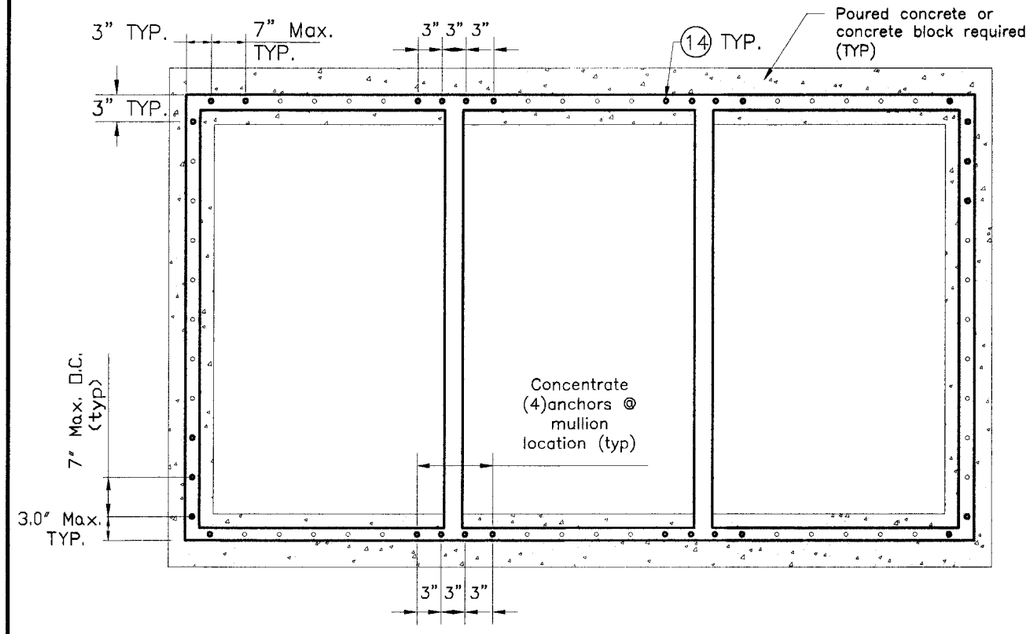

MULTIPLE PANELS (UNLIMITED)

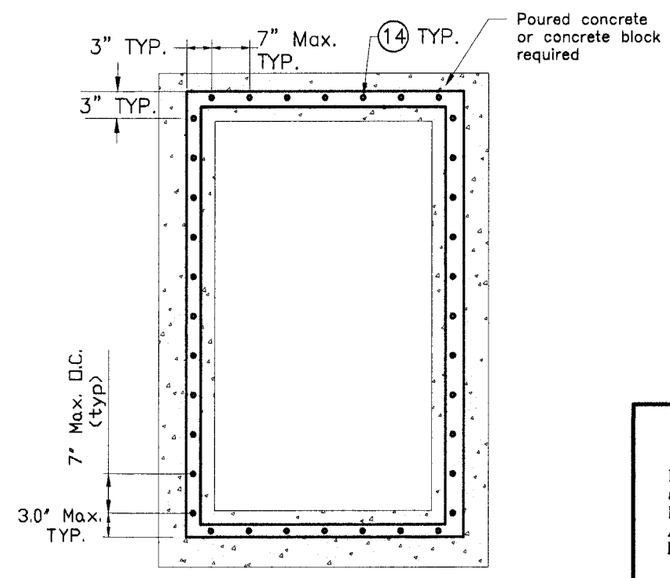

SINGLE PANEL

ANCHORAGE FOR SURFACE MOUNTINGS

PHOENIX ARCHITECTURAL PRODUCTS, INC.
SECURITY BARRIERS, ALUMINUM WINDOWS & DOORS
3075 JONQUIL Drive. S.E., Smyrna, GA 30080
TEL 770.803.6380 FAX 770.803.6388
www.phoenixwindows.com

PRODUCT: SURE GUARD PLUS 2007
WINDOW SECURITY BARRIER SYSTEM

V.M. Engineering, Inc.
C. of A. No. 27633
11278 S.W. 153rd Place
MIAMI, FLORIDA 33196
TEL: 786-281-6968
TEL: 305-383-5896

03/01/10
MORGAN VILLANUEVA, P.E.
STRUCTURAL ENGINEER
FLORIDA LIC. NO.: 60292

PRODUCT REVISED
as complying with the Florida Building Code
Acceptance No 09-0701.02
Expiration Date 08/02/2012
By Henry A. Mel
Miami Dade Product Control Division

MIAMI-DADE COUNTY

REV. No	DESCRIPTION	DATE
1	GENERAL	6-22-07
2	RENEWAL AS PER FBC 2007	5-26-09
4	-	-
5	-	-

SCALE: AS SHOWN
DATE: 5-26-09
F.B.C.
(High Velocity Hurricane Zone)
DWG No: SGP07-01
SHEET 8 OF 8