MIAMI-DADE COUNTY
BUILDING CODE COMPLIANCE OFFICE (BCCO)
PRODUCT CONTROL DIVISION

MIAMI-DADE COUNTY, FLORIDA
METRO-DADE FLAGLER BUILDING
140 WEST FLAGLER STREET, SUITE 1603
MIAMI, FLORIDA 33130-1563
(305) 375-2901 FAX (305) 372-6339
www.miamidade.gov/buildingcode

NOTICE OF ACCEPTANCE (NOA)

Innovative Window Concepts, LLC
1801 Corporate Drive
Boynton Beach, FL 33426

SCOPE:

This NOA is being issued under the applicable rules and regulations governing the use of construction materials. The documentation submitted has been reviewed by Miami-Dade County Product Control Division and accepted by the Board of Rules and Appeals (BORA) to be used in Miami Dade County and other areas where allowed by the Authority Having Jurisdiction (AHJ).

This NOA shall not be valid after the expiration date stated below. The Miami-Dade County Product Control Division (In Miami Dade County) and/or the AHJ (in areas other than Miami Dade County) reserve the right to have this product or material tested for quality assurance purposes. If this product or material fails to perform in the accepted manner, the manufacturer will incur the expense of such testing and the AHJ may immediately revoke, modify, or suspend the use of such product or material within their jurisdiction. BORA reserves the right to revoke this acceptance, if it is determined by Miami-Dade County Product Control Division that this product or material fails to meet the requirements of the applicable building code. This product is approved as described herein, and has been designed to comply with the Florida Building Code, including the High Velocity Hurricane Zone.

DESCRIPTION: Series 2041/2062 Aluminum Horizontal Sliding Window – L.M.I.

APPROVAL DOCUMENT: Drawing No. **W06-63**, titled "Series 2041/2062 Alum. Horizontal Sliding Wdw." sheets 1 through 5 of 5, dated 09/27/06, with revision A dated 06/11/09, prepared by Al-Farooq Corporation, signed and sealed by Arshad Viqar, P.E., bearing the Miami-Dade County Product Control Revision stamp with the Notice of Acceptance number and expiration date by the Miami-Dade County Product Control Division.

MISSILE IMPACT RATING: Large and Small Missile Impact Resistant

LABELING: Each unit shall bear a permanent label with the manufacturer's name or logo, city, state and following statement: "Miami-Dade County Product Control Approved", unless otherwise noted herein.

RENEWAL of this NOA shall be considered after a renewal application has been filed and there has been no change in the applicable building code negatively affecting the performance of this product.

TERMINATION of this NOA will occur after the expiration date or if there has been a revision or change in the materials, use, and/or manufacture of the product or process. Misuse of this NOA as an endorsement of any product, for sales, advertising or any other purposes shall automatically terminate this NOA. Failure to comply with any section of this NOA shall be cause for termination and removal of NOA.

ADVERTISEMENT: The NOA number preceded by the words Miami-Dade County, Florida, and followed by the expiration date may be displayed in advertising literature. If any portion of the NOA is displayed, then it shall be done in its entirety.

INSPECTION: A copy of this entire NOA shall be provided to the user by the manufacturer or its distributors and shall be available for inspection at the job site at the request of the Building Official.

This NOA **revises NOA # 06-1020.05** and consists of this page 1 and evidence page E-1, as well as approval document mentioned above.

The submitted documentation was reviewed by **Manuel Perez, P.E.**

MIAMI-DADE COUNTY APPROVED

NOA No. 09-0707.02
Expiration Date: February 22, 2012
Approval Date: November 11, 2009

Innovative Window Concepts, LLC

NOTICE OF ACCEPTANCE: EVIDENCE SUBMITTED

A. DRAWINGS

1. Manufacturer's die drawings and sections.
2. Drawing No **W06-63**, Sheets 1 through 5 of 5, titled "Series 2041/2062 Alum. Horizontal Sliding Wdw.", dated 09/27/06 with revision A dated 06/11/09, prepared by Al-Farooq Corporation, signed and sealed by Arshad Viqar, P.E.

B. TESTS

1. Test reports on: 1) Air Infiltration Test, per FBC, TAS 202-94
   2) Uniform Static Air Pressure Test, Loading per FBC, TAS 202-94
   3) Water Resistance Test, per FBC, TAS 202-94
   4) Large Missile Impact Test, per FBC, TAS 201-94
   5) Cyclic Wind Pressure Loading, per FBC, TAS 203-94
   6) Force Entry Test, per FBC 2411 3.2.1 and TAS 202-94

   along with marked-up drawings and installation diagram of an aluminum horizontal sliding window, prepared by American Test Lab of South Florida, Test Report No. **ATL-0720.01-06**, dated 08/22/06, signed and sealed by Henry Hattem, P.E. ***(Submitted under previous NOA#06-1020.05)***

C. CALCULATIONS

1. Anchor verification calculations and structural analysis, complying with FBC-2007, prepared by Al-Farooq Corporation, dated 6/11/09, signed and sealed by Arshad Viqar, P.E.
   Complies with ASTM E1300-02/04

D. QUALITY ASSURANCE

1. Miami Dade Building Code Compliance Office (BCCO).

E. MATERIAL CERTIFICATIONS

1. Notice of Acceptance No. **09-0312.03** issued to E.I. DuPont DeNemours & Co., Inc. for their "**DuPont Sentry Glass® Interlayer**" dated 05/13/09, expiring on 01/14/12.
2. Notice of Acceptance No. **09-0312.02** issued to E.I. DuPont DeNemours & Co., Inc. for their **"DuPont Butacite® PVB, Interlayer"** dated 05/13/09, expiring on 12/11/10.

F. STATEMENTS

1. Statement letter of conformance and no financial interest, dated June 10, 2009, signed and sealed by Arshad Viqar, P.E.

G. OTHERS

1. Notice of Acceptance No. **06-1020.02**, issued to Innovative Window Concepts, LLC for their Series 2041/2062 Aluminum Horizontal Sliding Window – L.M.I., approved on 02/22/07 and expiring on 02/22/12.

Manuel Perez, P.E.
Product Control Examiner
NOA No. 09-0707.02
Expiration Date: February 22, 2012
Approval Date: November 11, 2009

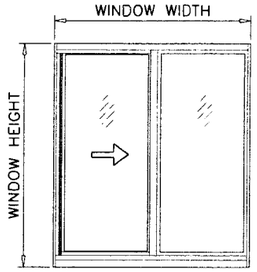

EQUAL LITE WINDOWS (XO OR OX SIZES)	
WINDOW DIMS.	
WINDOW WIDTH	WINDOW HEIGHT
72"	24"
72"	36"
72"	48"
59-3/8"	60"
74"	26"
74"	38-3/8"
70-3/8"	50-5/8"
56-1/2"	63"

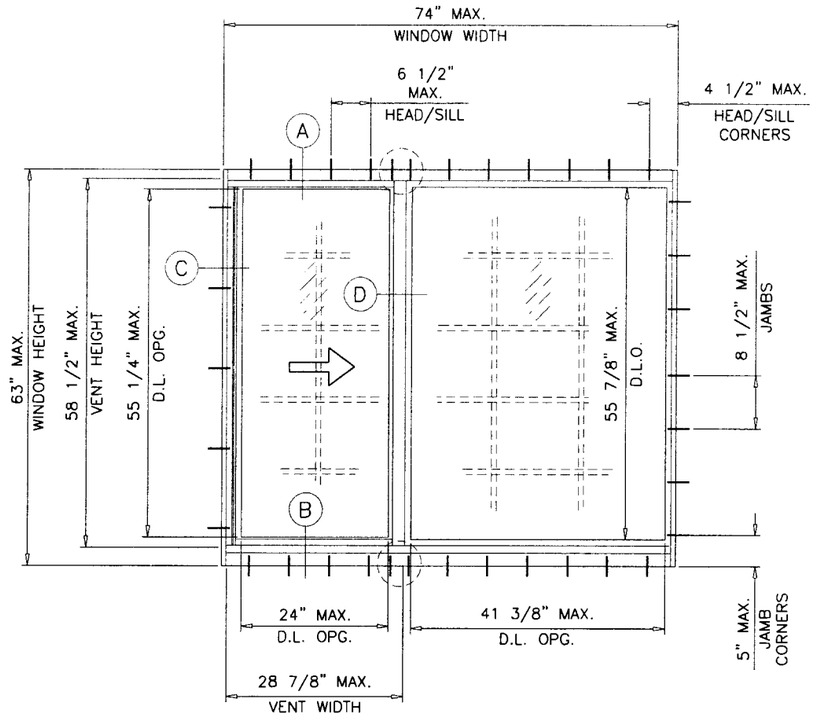

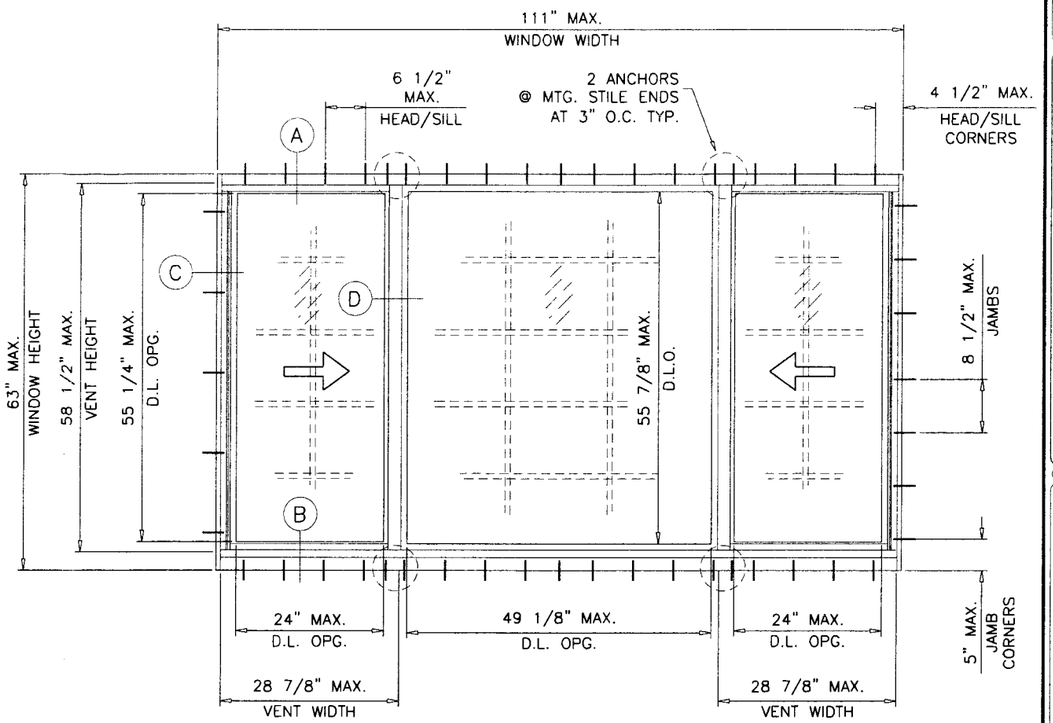

TYPICAL ELEVATIONS

THESE WINDOWS ARE RATED FOR LARGE & SMALL MISSILE IMPACT. SHUTTERS ARE NOT REQUIRED.

SERIES 2041/2062 ALUMINUM HORIZONTAL SLIDING WINDOW

APPROVAL APPLIES TO SINGLE UNITS OR SIDE BY SIDE COMBINATIONS OF H.S./H.S. OR HORIZONTAL SLIDING WITH OTHER MIAMI-DADE COUNTY APPR'D WINDOWS USING MIAMI-DADE COUNTY APPROVED MULLIONS IN BETWEEN.
LOWER DESIGN PRESSURE FROM WINDOWS OR MULLION APPROVAL WILL APPLY TO ENTIRE SYSTEM.

THIS PRODUCT HAS BEEN DESIGNED AND TESTED TO COMPLY WITH THE REQUIREMENTS OF THE FLORIDA BUILDING CODE 2007 EDITION INCLUDING HIGH VELOCITY HURRICANE ZONE (HVHZ).

WOOD BUCKS BY OTHERS, MUST BE ANCHORED PROPERLY TO TRANSFER LOADS TO THE STRUCTURE.

ANCHORS SHALL BE AS LISTED, SPACED AS SHOWN ON DETAILS, ANCHORS EMBEDMENT TO BASE MATERIAL SHALL BE BEYOND WALL DRESSING OR STUCCO.

ANCHORING OR LOADING CONDITIONS NOT SHOWN IN THESE DETAILS ARE NOT PART OF THIS APPROVAL.

A LOAD DURATION INCREASE IS USED IN DESIGN OF ANCHORS INTO WOOD ONLY.

MATERIALS INCLUDING BUT NOT LIMITED TO STEEL/METAL SCREWS, THAT COME INTO CONTACT WITH OTHER DISSIMILAR MATERIALS SHALL MEET THE REQUIREMENTS OF 2007 FLORIDA BLDG. CODE SECTION 2003.8.4.

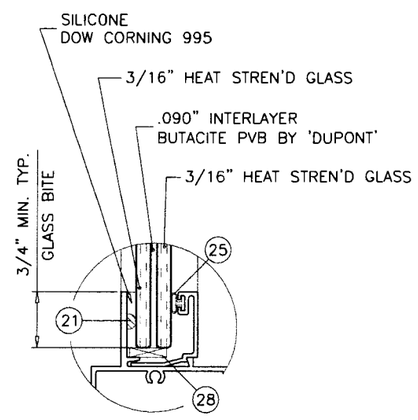

SERIES 2041

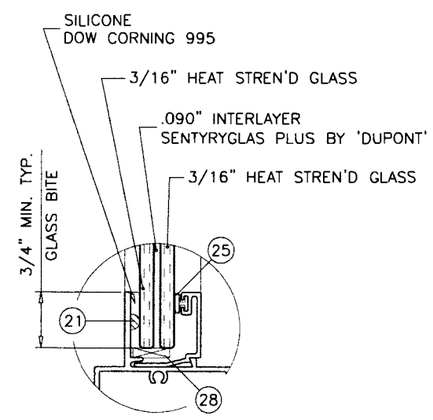

SERIES 2062

GLAZING OPTIONS

MAXIMUM DESIGN LOAD RATING (FOR SIZES SHOWN ABOVE OR SMALLER) SERIES 2041	+ 75.0 PSF - 85.0 PSF
MAXIMUM DESIGN LOAD RATING (FOR SIZES SHOWN ABOVE OR SMALLER) SERIES 2062	+ 75.0 PSF - 100.0 PSF

NOTE:
GLASS CAPACITIES ON THIS SHEET ARE BASED ON ASTM E1300-02/04 (3 SEC. GUSTS) AND FLORIDA BUILDING COMMISSION DECLARATORY STATEMENT DCA05-DEC-219

Engr: ARSHAD VIQAR
CIVIL
FLA. PE # 38863
C.A.N. 3538

JUN 15 2009

PRODUCT REVISED
as complying with the Florida Building Code
Acceptance No. 09-0707.02
Expiration Date FEB. 22, 2012
By Manuel Perez
Miami-Dade Product Control Division

AL-FAROOQ CORPORATION
ENGINEERS & PRODUCT DEVELOPMENT
1235 S.W. 87 AVE
MIAMI, FLORIDA 33174
TEL. (305) 264-8100 FAX. (305) 262-6978
COMP-ANL\W06-63IWC

INNOVATIVE WINDOW CONCEPTS
505 INDUSTRIAL WAY
BOYNTON BEACH, FL. 33426
TEL. (561) 493-2303 FAX. (561) 493-2302

SERIES 2041/2062 ALUM HORIZONTAL SLIDING WDW

revisions:

no	date	by	description
A	06.11.09		UPDATED FOR 2007 FBC

date: 09-27-06
scale: 1/2"=1'-0"
dr. by: HAMID
chk. by:

drawing no. W06-63

sheet 1 of 5

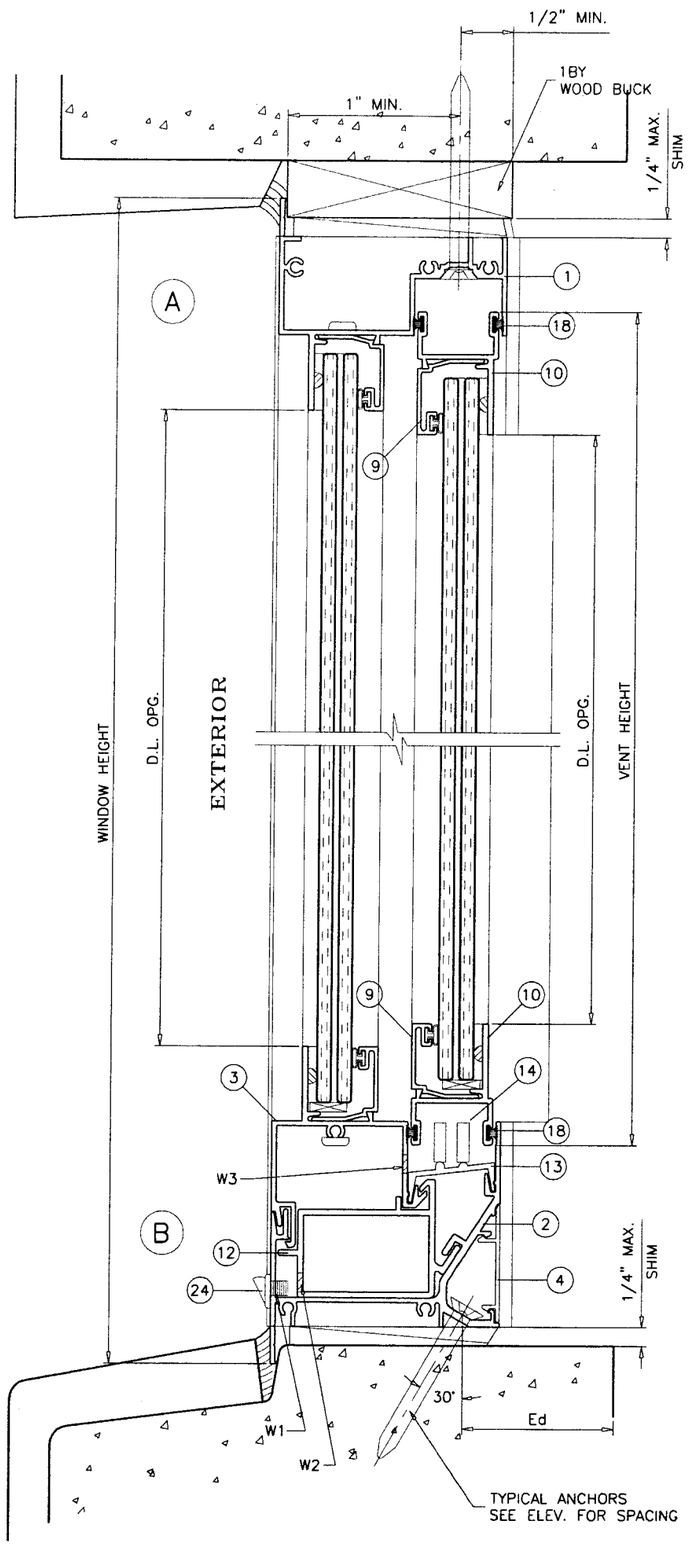

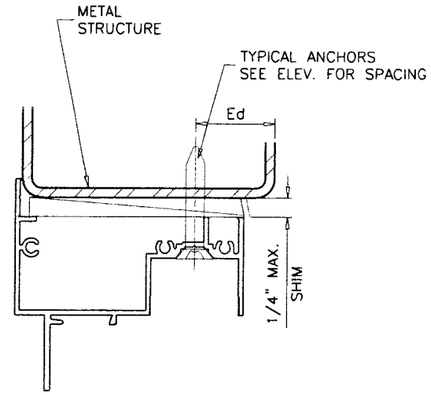

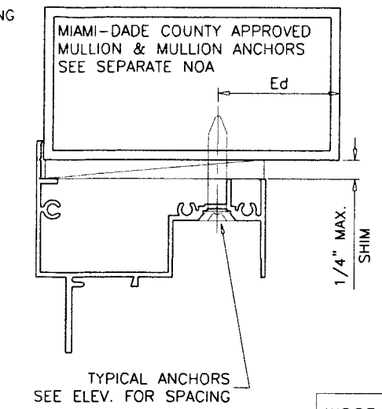

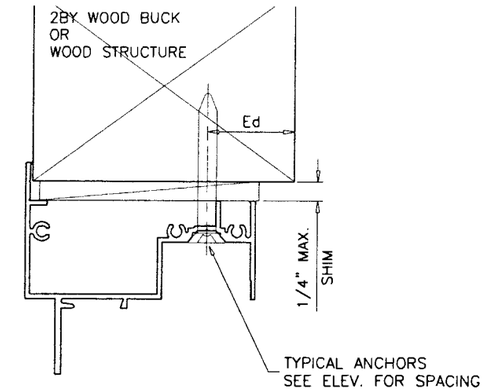

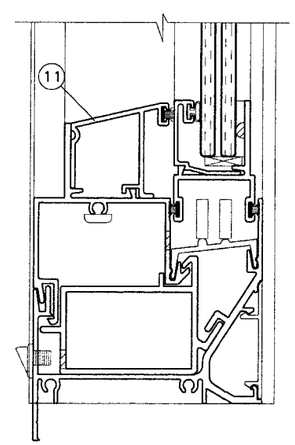

WOOD BUCKS AND METAL STRUCTURE NOT BY I.W.C. MUST SUSTAIN LOADS IMPOSED BY GLAZING SYSTEM AND TRANSFER THEM TO THE BUILDING STRUCTURE.

TYPICAL ANCHORS: SEE ELEV. FOR SPACING

1/4" DIA. ULTRACON BY 'ELCO' (Fu=177 KSI, Fy=155 KSI)

INTO 2BY WOOD BUCKS OR WOOD STRUCTURES
1-3/8" MIN. PENETRATION INTO WOOD

THRU 1BY BUCKS INTO CONC. OR MASONRY
1-1/4" MIN. EMBED INTO CONC. OR MASONRY

DIRECTLY INTO CONC. OR MASONRY
1-1/4" MIN. EMBED INTO CONC. OR MASONRY

#14 SMS OR SELF DRILLING SCREWS (GRADE 2 CRS)

INTO MIAMI-DADE COUNTY APPROVED MULLIONS (MIN. THK. = .090")

INTO METAL STRUCTURES
STEEL : 12 GA. MIN. (Fy = 36 KSI MIN.)
ALUMINUM : 1/8" THK. MIN. (6063-T5 MIN.)
(STEEL IN CONTACT WITH ALUMINUM TO BE PLATED OR PAINTED)

Ed = ANCHOR EDGE DISTANCE

INTO CONCRETE AND MASONRY = 2" MIN.
INTO WOOD STRUCTURE = AS SHOWN
INTO METAL STRUCTURE = 1/2" MIN.

CONCRETE f'c = 3000 PSI MIN.
C-90 HOLLOW/FILLED BLOCK f'm = 2000 PSI MIN.

SEALANTS:

ALL JOINTS AND FRAME CONNECTIONS SEALED WITH SCHNEE MOREHEAD SEAM SEALER SM5504.

WEEPHOLES:

W1 = 1-5/8" X 1/4" WEEPHOLES AT 7-1/8" FROM EACH END AND 24" O.C. WITH WEEP COVER

W2 = 1" X 1/4" WEEP SLOTS UNDER FIXED LITE AT 24" O.C.

W3 = 1" X 1/4" WEEP SLOTS ON VENT AREA AT 5" FROM ENDS AND 7-3/4" O.C.

Engr: ARSHAD VIQAR
CIVIL
FLA. PE # 38863
C.A.N. 3538

JUN 15 2009

PRODUCT REVISED
as complying with the Florida Building Code
Acceptance No. 09-0707.02
Expiration Date FEB. 02, 2012
By Manuel Perez
Miami-Dade Product Control Division

AL-FAROOQ CORPORATION
ENGINEERS & PRODUCT DEVELOPMENT
1235 S.W. 87 AVE
MIAMI, FLORIDA 33174
TEL. (305) 264-8100 FAX. (305) 262-6978

COMP-ANL\W06-63IWC

SERIES 2041/2062 ALUM HORIZONTAL SLIDING WDW.

INNOVATIVE WINDOW CONCEPTS
505 INDUSTRIAL WAY
BOYNTON BEACH, FL. 33426
TEL. (561) 493-2303 FAX. (561) 493-2302

revisions:

no	date	by	description
A	06.11.09		UPDATED FOR 2007 FBC

date: 09-27-06
scale: 1/2" = 1"
dr. by: HAMID
chk. by:

drawing no. W06-63

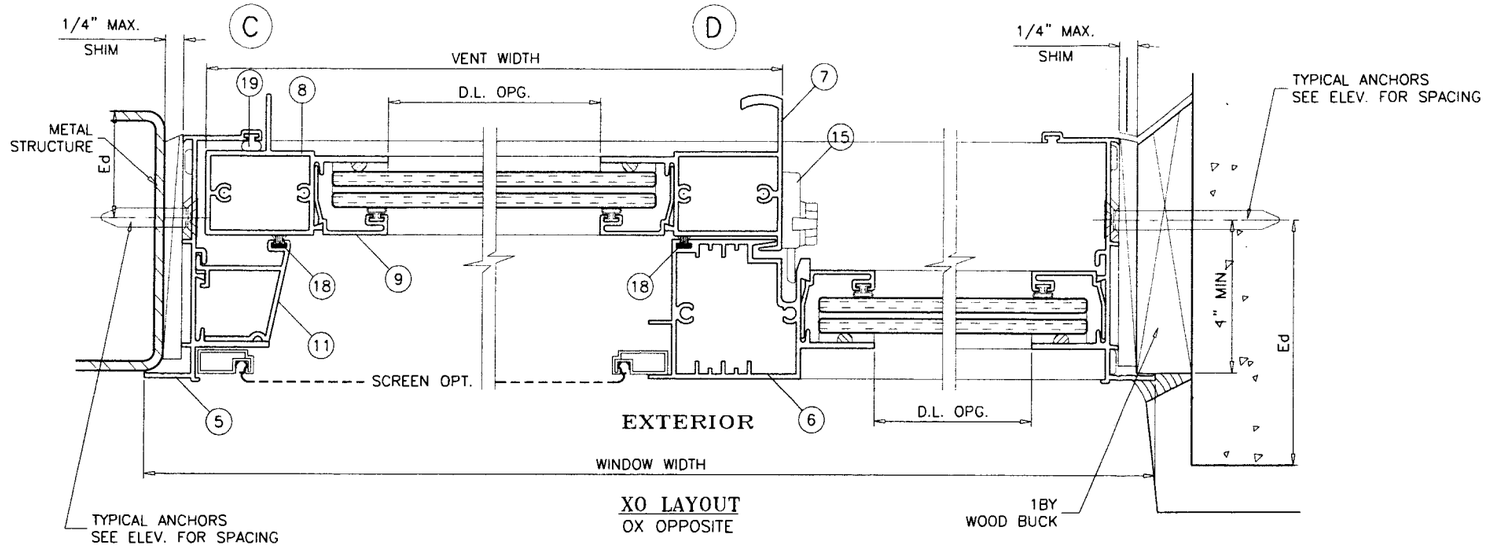

XO LAYOUT
OX OPPOSITE

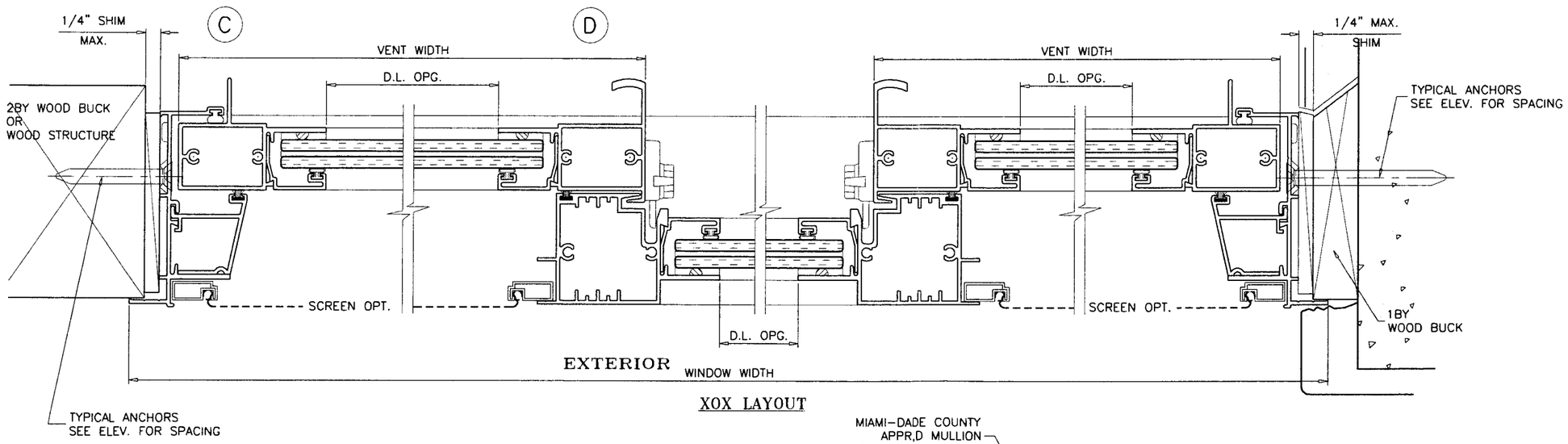

XOX LAYOUT

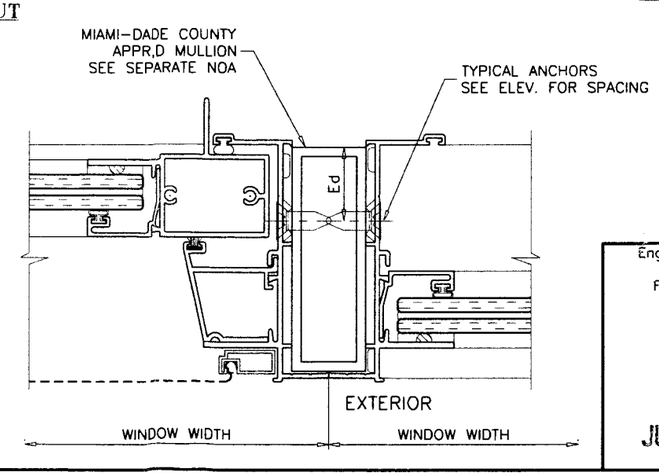

Engr: ARSHAD VIQAR
CIVIL
FLA. PE # 38863
C.A.N. 3538

JUN 15 2009

PRODUCT REVISED
as complying with the Florida
Building Code
Acceptance No. 09-0707.02
Expiration Date FEB. 12, 2012
By Manuel Perez
Miami-Dade Product Control
Division

AL-FAROOQ CORPORATION
ENGINEERS & PRODUCT DEVELOPMENT
1235 S.W. 87 AVE
MIAMI, FLORIDA 33174
TEL. (305) 264-8100 FAX. (305) 262-6978
COMP-ANL\W06-63\WC

SERIES 2041/2062 ALUM. HORIZONTAL SLIDING WDW.

INNOVATIVE WINDOW CONCEPTS
505 INDUSTRIAL WAY
BOYNTON BEACH, FL. 33426
TEL. (561) 493-2303 FAX. (561) 493-2302

revisions:

no	date	by	description
A	06.11.09		UPDATED FOR 2007 FBC

date: 09-27-06
scale: 1/2" = 1"
dr. by: HAMID
chk. by:

drawing no.
W06-63

sheet 3 of 5

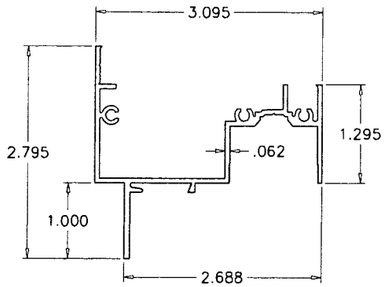

(1) FRAME HEAD

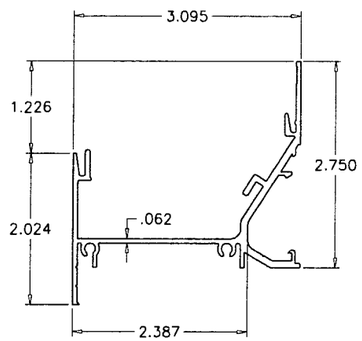

(2) FRAME SILL BASE

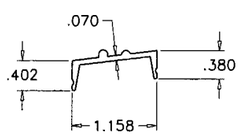

(13) SILL TRACK

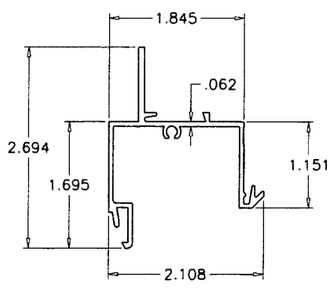

(3) FRAME SILL INSERT

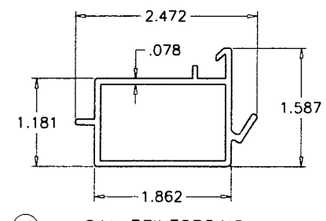

(12) SILL REINFORCING

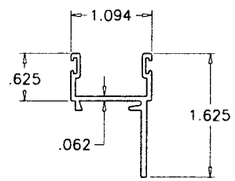

(10) VENT TOP/BOTTOM RAIL

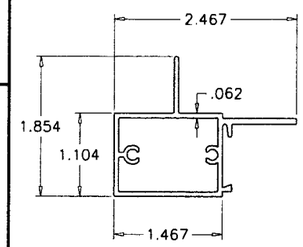

(8) VENT SIDE PULL

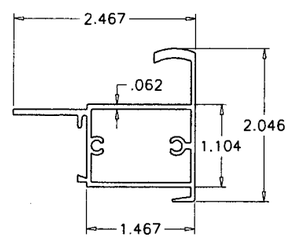

(7) VENT SIDE INTERLOCK

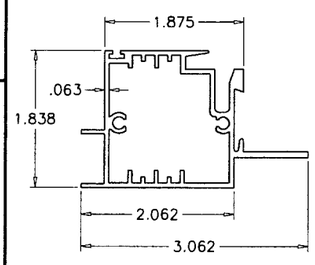

(6) FIXED MTG. STILE

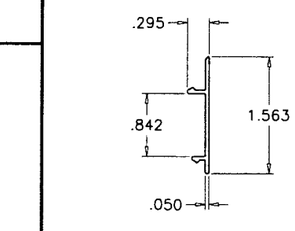

(4) FRAME SILL COVER

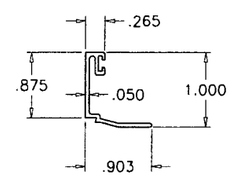

(9) GLAZING BEAD

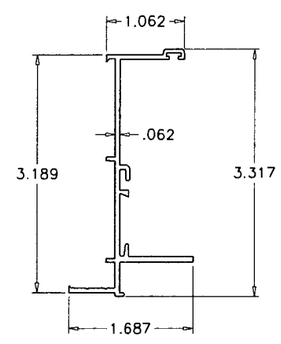

(5) FRAME JAMB

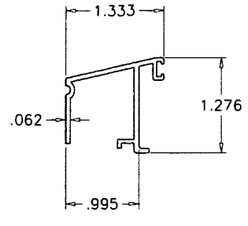

(11) WATER SHED

ITEM	PART #	QUANTITY	DESCRIPTION	MATERIAL	MANF./SUPPLIER/REMARKS
1	021-005	1	FRAME HEAD	6063-T6	-
2	021-014	1	FRAME SILL BASE	6063-T6	-
3	021-013	1	FRAME SILL INSERT	6063-T5	-
4	021-015	1	FRAME SILL COVER	6063-T5	-
5	021-006	2	FRAME JAMB	6063-T6	-
6	022-007	1/ VENT	FIXED MEETING STILE	6063-T5	-
7	022-004	1/ VENT	VENT SIDE INTERLOCK	6063-T5	-
8	022-019	1/ VENT	VENT SIDE PULL	6063-T5	-
9	021-011	4/ GLASS	GLAZING BEAD	6063-T5	-
10	021-003	2/ VENT	VENT TOP/BOTTOM RAIL	6063-T5	-
11	021-039	1/ VENT	WATER SHED	6063-T5	-
12	022-038	-	SILL REINFORCEMENT, 12" LONG	6063-T5	1/ MTG. RAIL & 1 BELOW FIX.
13	021-016	1	TRACK	ALUMINUM	-
14	010-004	2/ VENT	WHEEL HOUSING ASSEMBLY	RIGID PVC	M & M PLASTICS
15	004-002	2/ VENT	SWEEP LOCK (PD207)	-	SULLIVAN & ASSOC.
16	008-014	AS REQD.	ASSEMBLY SCREWS	ST/ST	#8 X 1" PH SMS
17	008-031	4	MTG. RAIL ASSEMBLY SCREWS	ST/ST	#10 X 1" PH SMS
18	016-002	AS REQD.	.187 X 170 WOOL PILE W/ FIN SEAL	FELT	ULTRAFAB
19	023-001	AS REQD.	.187 X .270 FOAM FILLED BULB	VINYL	AMESBURY
20	012-004	AS REQD.	GLAZING COMPOUND	SILICONE	DOW 995
21	015-006	AS REQD.	1/8" SPACER	ACRYLIC	FRANK LOWE RUBBER
22	012-001	-	SM5504 SEAM SEALER	-	SCHNEE MOREHEAD
23	010-014	AS REQD.	BAFFLE	NYLON	M & M PLASTICS
24	010-015	AS REQD.	WEEP COVER	NYLON	PREFERRED ENGINEERING
25	015-001	AS REQD.	.185 X 220 BULB VINYL	VINYL	MASTER TOOL
26	010-002	2/ VENT	END CAP	ACETYL	M & M PLASTICS
27	-	-	-	-	-
28	015-010	2/ LITE	1/8" X 1/2" SETTING BLOCK	NEOPRENE	FRANK LOWE RUBBER

Engr: ARSHAD VIQAR
CIVIL
FLA. PE # 38863
C.A.N. 3538

JUN 15 2009

PRODUCT REVISED
as complying with the Florida
Building Code
Acceptance No. 09-0707.02
Expiration Date FEB. 22, 2012
By Manuel Perez
Miami-Dade Product Control
Division

AL-FAROOQ CORPORATION
ENGINEERS & PRODUCT DEVELOPMENT
1235 S.W. 87 AVE
MIAMI, FLORIDA 33174
TEL. (305) 264-8100 FAX. (305) 262-6978
COMP-ANL\W06-63IWC

SERIES 2041/2062 ALUM HORIZONTAL SLIDING WDW.

INNOVATIVE WINDOW CONCEPTS
505 INDUSTRIAL WAY
BOYNTON BEACH, FL. 33426
TEL. (561) 493-2303 FAX. (561) 493-2302

revisions:

no	date	by	description
A	06.11.09		UPDATED FOR 2007 FBC

date: 09-27-06
scale: 1/2" = 1"
dr. by: HAMID
chk. by:

drawing no.
W06-63

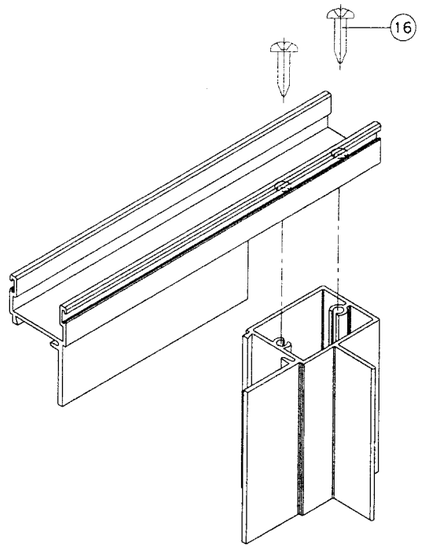

VENT TOP/BOTTOM CORNERS

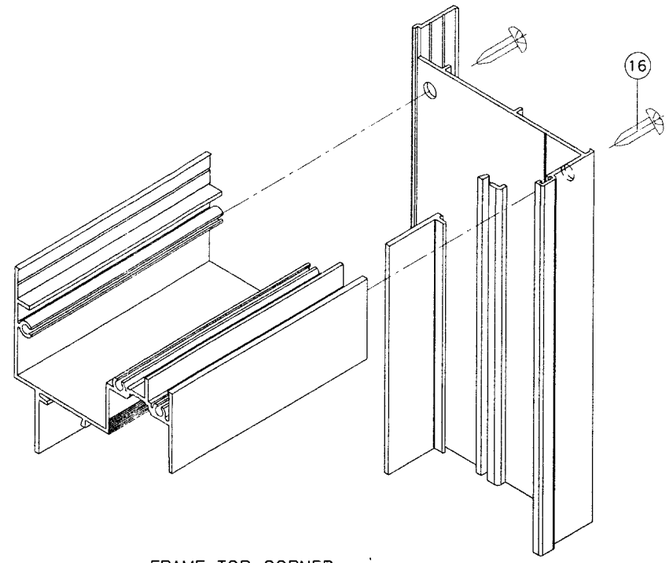

FRAME TOP CORNER

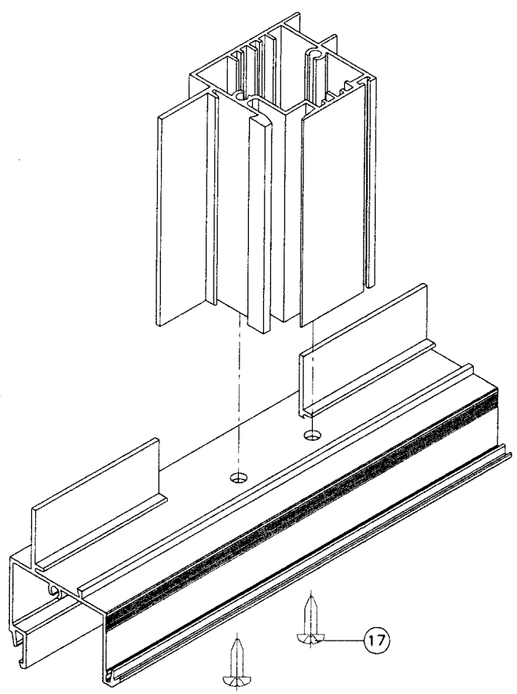

FIXED MTG. RAIL CORNER

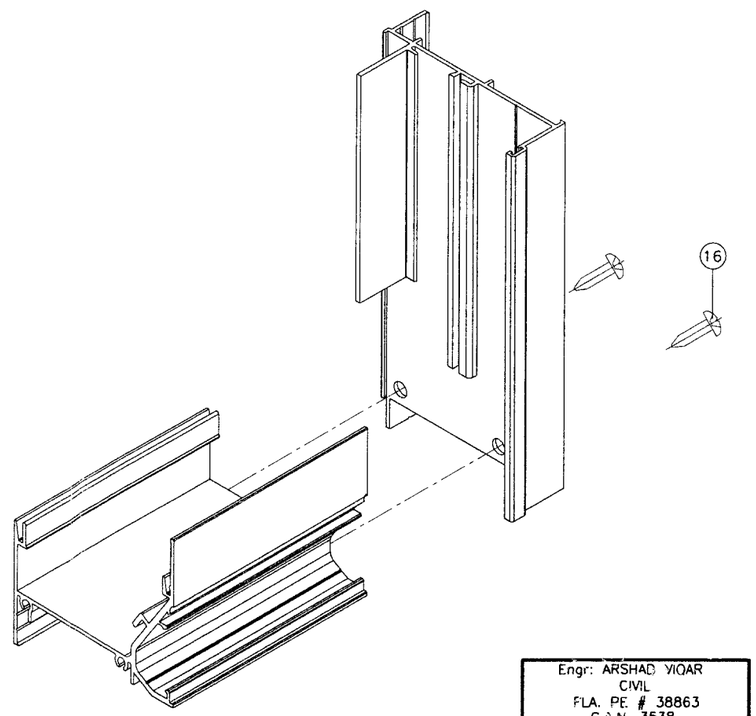

FRAME BOTTOM CORNER

Engr: ARSHAD VIQAR
CIVIL
FLA. PE # 38863
C.A.N. 3538

JUN 1 5 2009

PRODUCT REVISED
as complying with the Florida
Building Code
Acceptance No. 09-0707.02
Expiration Date FEB. 02, 2012
By Manuel Perez
Notice/State Product Control
Division

AL-FAROOQ CORPORATION
ENGINEERS & PRODUCT DEVELOPMENT
1235 S.W. 87 AVE
MIAMI, FLORIDA 33174
TEL. (305) 264-8100 FAX. (305) 262-6978

COMP-ANL\W06-63\WC

SERIES 2041/2062 ALUM HORIZONTAL SLIDING WDW.

INNOVATIVE WINDOW CONCEPTS
505 INDUSTRIAL WAY
BOYNTON BEACH, FL. 33426
TEL. (561) 493-2303 FAX. (561) 493-2302

revisions:

no	date	by	description
A	06.11.09		UPDATED FOR 2007 FBC

date: 09-27-06
scale: 1/2" = 1"
dr. by: HAMID
chk. by:

drawing no.
W06-63

sheet 5 of 5