MIAMI-DADE COUNTY
BUILDING AND NEIGHBORHOOD COMPLIANCE DEPARTMENT (BNC)
BOARD AND CODE ADMINISTRATION DIVISION

MIAMI-DADE COUNTY
PRODUCT CONTROL SECTION
11805 SW 26 Street, Room 208
Miami, Florida 33175-2474
T (786) 315-2590 F (786) 315-2599
www.miamidade.gov/building/home/asp

NOTICE OF ACCEPTANCE (NOA)

Curries Division of AADG, Inc.
1502 12th St. NW
Mason City, IA 50401

SCOPE:

This NOA is being issued under the applicable rules and regulations governing the use of construction materials. The documentation submitted has been reviewed and accepted by Miami-Dade County BNC -Product Control Section to be used in Miami Dade County and other areas where allowed by the Authority Having Jurisdiction (AHJ).

This NOA shall not be valid after the expiration date stated below. The Miami-Dade County Product Control Section (In Miami Dade County) and/or the AHJ (in areas other than Miami Dade County) reserve the right to have this product or material tested for quality assurance purposes. If this product or material fails to perform in the accepted manner, the manufacturer will incur the expense of such testing and the AHJ may immediately revoke, modify, or suspend the use of such product or material within their jurisdiction. BNC reserves the right to revoke this acceptance, if it is determined by Miami-Dade County Product Control Section that this product or material fails to meet the requirements of the applicable building code.
This product is approved as described herein, and has been designed to comply with the Florida Building Code, including the High Velocity Hurricane Zone.

DESCRIPTION: Series "707 & 747"Outswing 16 ga Steel Glazed Doors w/ wo Transom-L.M.I.

APPROVAL DOCUMENT: Drawing No. **RD0259**, titled "Curries Model 707 & 747", sheets 1 through 20 of 20, dated 01/31/11, prepared by manufacture, signed and sealed by Robert J. Amoruso, P.E., bearing the Miami-Dade County Product Control Revision stamp with the Notice of Acceptance number and expiration date by the Miami-Dade County Product Control Section.

MISSILE IMPACT RATING: Large Missile Impact Resistant

Limitations:

1. Opaque doors or transom is not part of this approval.
2. Cluster of five (5-anchors) required at sill (double door astragal end) with lock option 1 & 3 (see sheet 2) and with lock option 2 (Rim exit w/ mullion detail H1-H1-/6 & mullion installation see sheet 2) require two (2) anchors at 12" OC at astragal end with **additional** two (2) 3/8 Hilti Expansion anchor at mullion end.

LABELING: Each unit shall bear a permanent label with the manufacturer's name or logo, city, state and following statement: "Miami-Dade County Product Control Approved", unless otherwise noted herein.

RENEWAL of this NOA shall be considered after a renewal application has been filed and there has been no change in the applicable building code negatively affecting the performance of this product.

TERMINATION of this NOA will occur after the expiration date or if there has been a revision or change in the materials, use, and/or manufacture of the product or process. Misuse of this NOA as an endorsement of any product, for sales, advertising or any other purposes shall automatically terminate this NOA. Failure to comply with any section of this NOA shall be cause for termination and removal of NOA.

ADVERTISEMENT: The NOA number preceded by the words Miami-Dade County, Florida, and followed by the expiration date may be displayed in advertising literature. If any portion of the NOA is displayed, then it shall be done in its entirety.

INSPECTION: A copy of this entire NOA shall be provided to the user by the manufacturer or its distributors and shall be available for inspection at the job site at the request of the Building Official.
This NOA **revises & renews NOA # 04-0622.06** and consists of this page 1 and evidence pages E-1, as well as approval document mentioned above.
The submitted documentation was reviewed by **Ishaq I. Chanda, P.E.**

MIAMI-DADE COUNTY APPROVED
3/31/11

NOTICE OF ACCEPTANCE: EVIDENCE SUBMITTED

A. DRAWINGS (transferred from file # **04-0622.06**)

1. Manufacturer's die drawings and sections.
2. Drawing No. **RD0259**, titled "Curries Model 707 & 747", sheets 1 thru 20 of 20, dated 01/31/11, prepared by manufacture, signed and sealed by Robert J. Amoruso, P.E.

B. TESTS (transferred from file # **04-0622.06**)

1. Test reports on: 1) Air Infiltration Test, per FBC, TAS 202-94
   2) Uniform Static Air Pressure Test, Loading per FBC TAS 202-94
   3) Water Resistance Test, per FBC, TAS 202-94
   4) Large Missile Impact Test per FBC, TAS 201-94
   5) Cyclic Wind Pressure Loading per FBC, TAS 203-94
   6) Forced Entry Test, per FBC 2411 3.2.1, TAS 202-94

along with marked-up drawings and installation diagram of an Outswing Steel Entry door w/ transom & sidelite, prepared by Architectural Testing, Inc., Test Report No. **ATI-02-4412.01**, dated 06-11-07/13/03, signed and sealed by Joseph A. Reed, P. E.

C. CALCULATIONS

1. Anchor verification calculations, complying with FBC-2007, prepared by PTC, LLC, dated 04/14/10 and last revised on 1/31/11, signed and sealed by Robert J. Amoruso, P.E
2. Glazing complies w/ ASTME-1300-02 & -04

D. QUALITY ASSURANCE

1. Miami Dade Building and Neighborhood Compliance Department (BNC).

E. MATERIAL CERTIFICATIONS

1. Notice of Acceptance No. **08-0709.04** issued to Nebula Glass Int'l. dba Glasslam, for "Safety Plus II", expiring on 08/07/2013.
2. Tensile test report prepared by Architectural Testing, Inc., Test Report No. **ATI-02-4412.01**, dated 06-11-07/13/03, signed and sealed by Joseph A. Reed, P. E.
3. Test Report No. **3082960-5001Alt-1**, dated July 07, 2007, issued by Intertek Testing Svc. Inc for "Surface Burning Characteristics of Building material" per ASTME84-05 and self Ignition for Expanded Polystyrene foam "Type I EPS-2 Thick", issued to Insulfoam, LLC.

F. STATEMENTS

1. Statement letter of conformance and letter of no financial interest, prepared by PTC, LLC, dated 04/14/10, signed and sealed by Robert J. Amoruso, P.E.

G. OTHER

1. This NOA **revises & renews** NOA # **04-0622.06**, expired on Sep. 16, 2009.
2. Test proposal, dated 04/01/03 approved by BCCO.

Ishaq I. Chanda

Ishaq I. Chanda, P.E.
Product Control Examiner
NOA No 09-0709.02
Expiration Date: September 16, 2014
Approval Date: April 07, 2011

DOOR ELEVATIONS

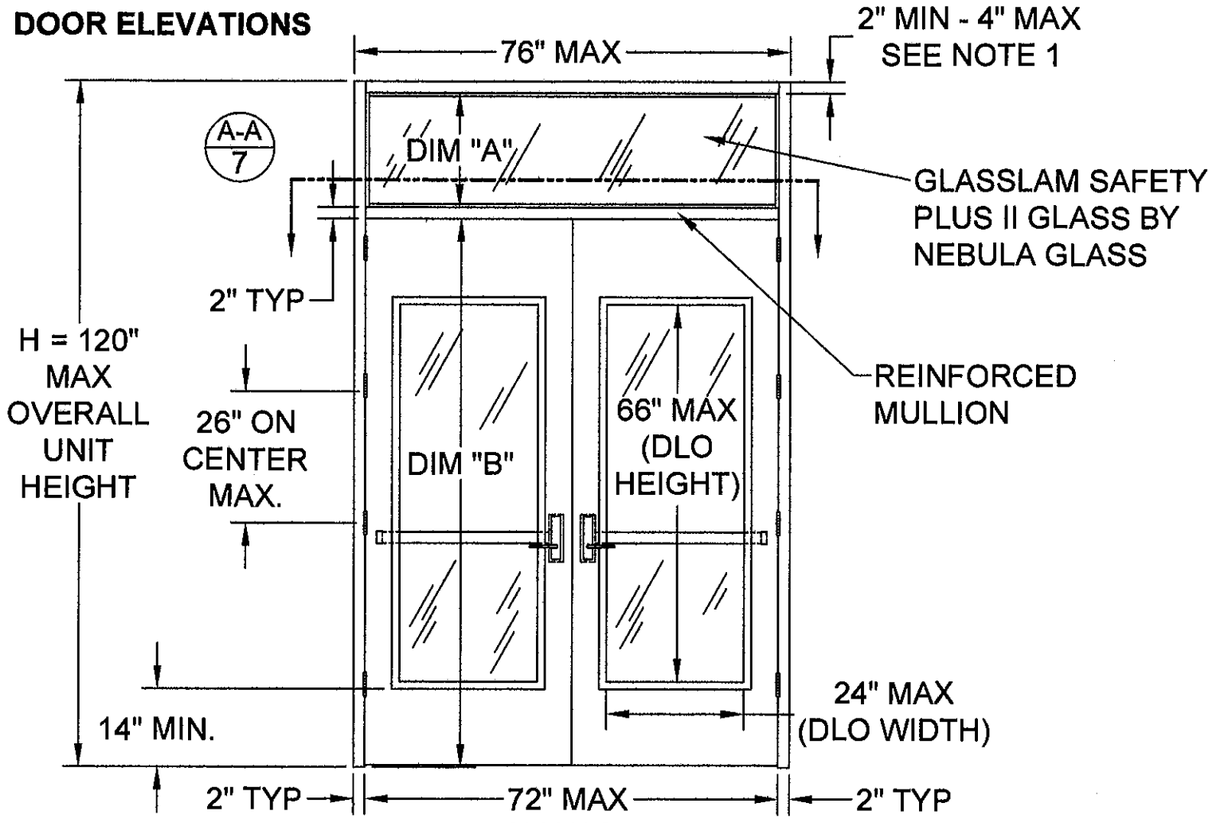

DIM "A"	DIM "B"	DIM "H"
24	80	110
24	81	111
24	82	112
24	83	113
24	84	114
24	85	115
24	86	116
24	87	117
24	88	118
24	89	119
24	90	120
23	91	120
24	92	120
23	93	120
22	94	120
21	95	120
20	96	120

NOTES:

1. FRAME FACES 2", SEE SHEET 3 FOR FRAME HEADS WITH GREATER THAN 2" FACE.
2. TABLE SHOWS CORRELATION BETWEEN DIMENSIONS "A" AND "B"
3. SEE SHEETS 10, 11, 12, 13, & 14 FOR ANCHORING DETAILS.
4. THIS PRODUCT IS DESIGNED TO COMPLY WITH THE HIGH VELOCITY HURRICANE ZONE OF THE CURRENT FLORIDA BUILDING CODE AND FOR WIND PRESSURES PER ASCE 7-05.
5. WOOD BUCKS BY OTHERS MUST BE PROPERLY ANCHORED TO TRANSFER LOADS TO THE BUILDING STRUCTURE.

PRODUCT REVISED
as complying with the Florida Building Code
Acceptance No 09-0709.07
Expiration Date Sept. 16, 2014
By Ishaq I. Chanda
Miami Dade Product Control

DESIGN PRESSURE RATING

	WHERE WATER INFILTRATION REQUIREMENT IS REQUIRED	WHERE WATER INFILTRATION REQUIREMENT IS NOT REQUIRED
POSITIVE	NOT APPROVED	+60 PSF
NEGATIVE	NOT APPROVED	-60 PSF

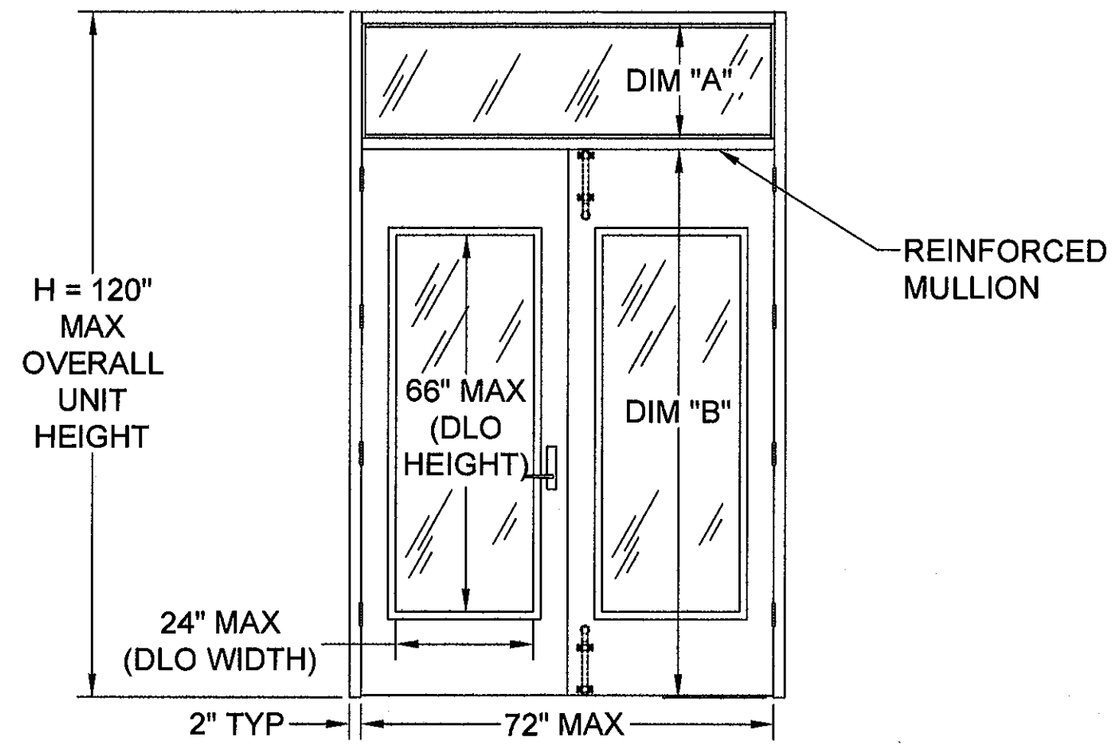

FOR OPTIONAL DOOR GLAZING DAYLIGHT OPENING (DLO)
MINIMUM DLO WIDTH 3"; MAXIMUM WIDTH 24"
MINIMUM DLO HEIGHT 3"; MAXIMUM HEIGHT 66"
NOT TO EXCEED 1584 SQUARE INCHES DLO PER LEAF
MULTIPLE LIGHTS ALLOWED. SEE TABLE ON SHEET 8.

REV	DATE	DESCRIPTION	DR	CK
A	11-15-10	CH NOTES, TITLE, ADD "B" BALLOON	AWS	NTK

ROBERT JAMES AMORUSO
LICENSE
No 49752
1/31/11
STATE OF FLORIDA
PROFESSIONAL ENGINEER

ROBERT J. AMORUSO, PE, FL PE #49752

DR: N. KRASCHEL
CK: NTK
SCAN: ------
TOLERANCE: UNLESS OTHERWISE SPECIFIED
DEC± .031
ANG± .5°
FRAC± 1/32
SH SZ: B
SCALE: NTS

CURRIES
MASON CITY, IOWA

TITLE:
CURRIES MODEL 707 OR 747
16 GA. STEEL OUT-SWING DOORS
WITH OR WITHOUT TRANSOM

SH NO: 1 OF 20
DATE: 02-26-07
DWG.NO. RD0259

ADDITIONAL ELEVATIONS

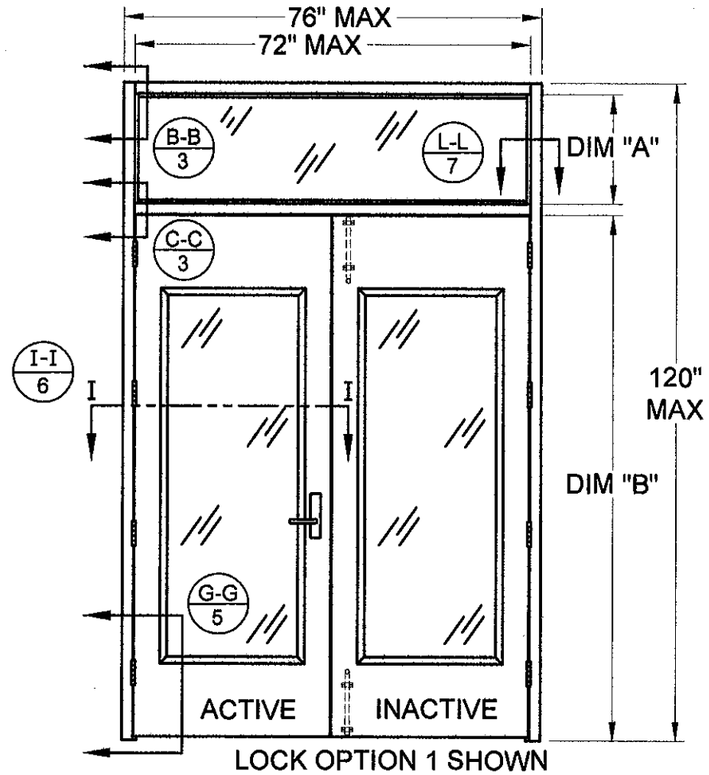

LOCK OPTION 1 SHOWN
(MORTISE L OCK W/ DEAD BOLT ACTIVE, SURFACE BOLT INACTIVE)

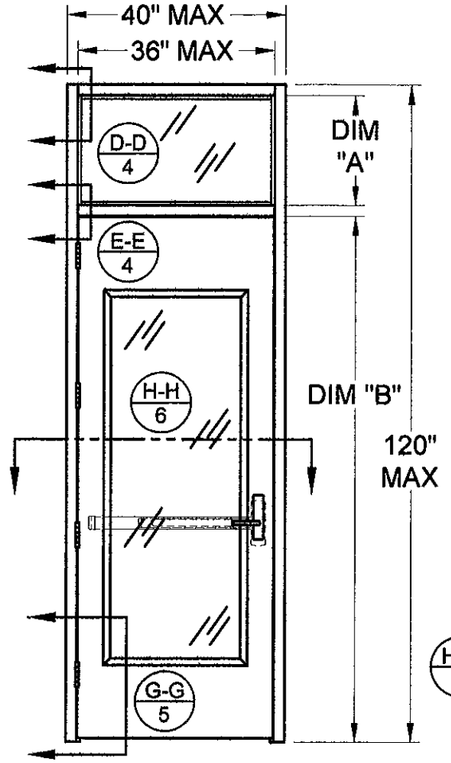

LOCK OPTION 2 SHOWN
(RIM EXIT)

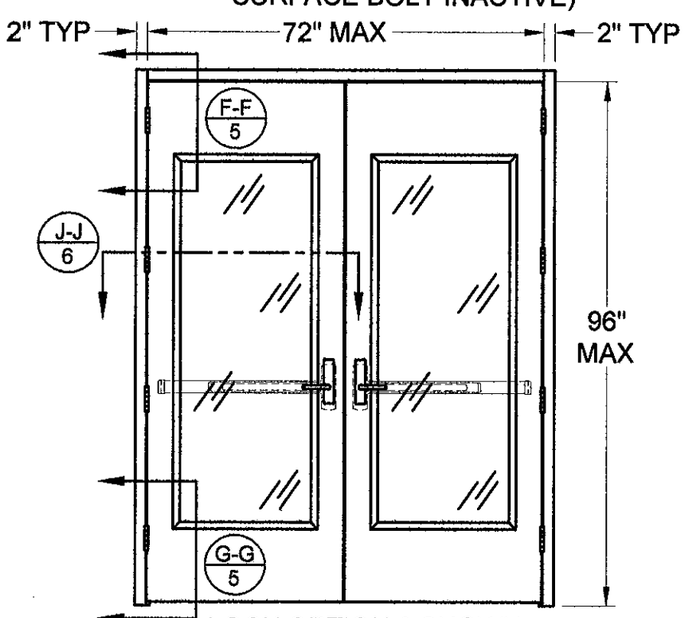

LOCK OPTION 3 SHOWN
(CONCEALED VERTICAL ROD)

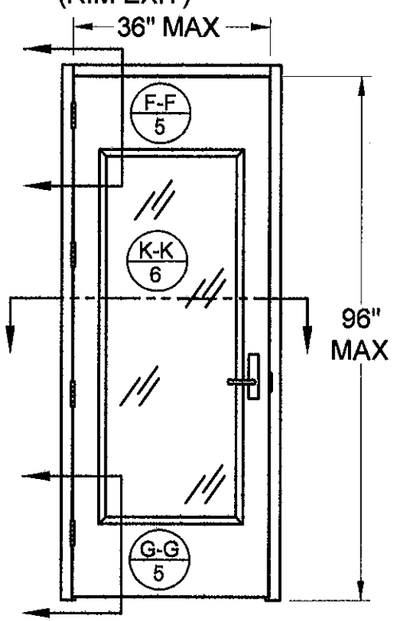

LOCK OPTION 1 SHOWN
(MORTISE LOCK W/ DEAD BOLT)

LOCK OPTION 1: (MORTISE LOCK W/ DEAD BOLT ACTIVE, SURFACE BOLT INACTIVE)
ACTIVE LEAF:
CORBIN RUSSWIN ML2000 SERIES MORTISE LOCK (LATCH BOLT AND DEAD BOLT REQUIRED)
INACTIVE LEAF:
988 SURFACE BOLTS MOUNTED TO TOP AND BOTTOM OF DOOR LEAF.

LOCK OPTION 2: (RIM EXIT)
ACTIVE/ INACTIVE LEAF:
SARGENT HC8800 SERIES RIM EXIT DEVICE
SARGENT HC 980 HARDWARE MULLION MUST BE USED WITH HC8800 ON PAIRS OF DOORS

LOCK OPTION 3: (CONCEALED VERTICAL ROD)
ACTIVE/ INACTIVE LEAF:
SARGENT MD8600 SERIES CONCEALED VERTICAL ROD (CVR) EXIT DEVICE

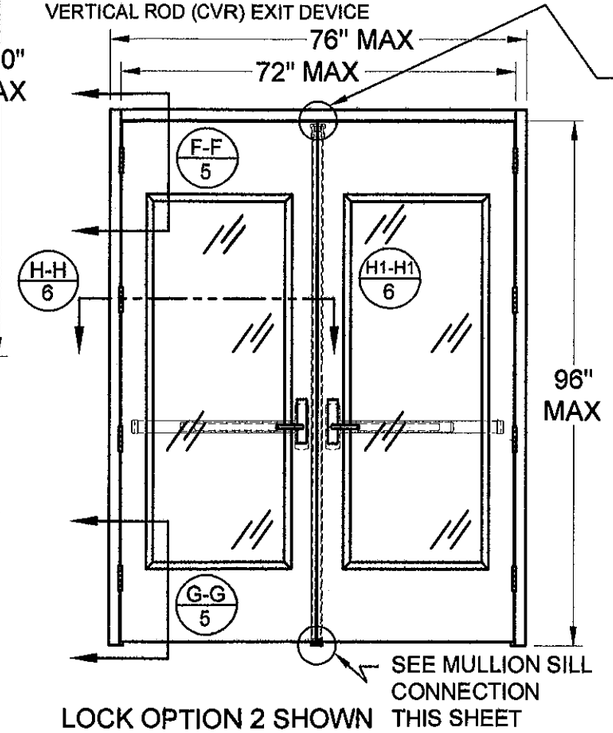

LOCK OPTION 2 SHOWN
(RIM EXITS WITH HC980 HARDWARE MULLION)

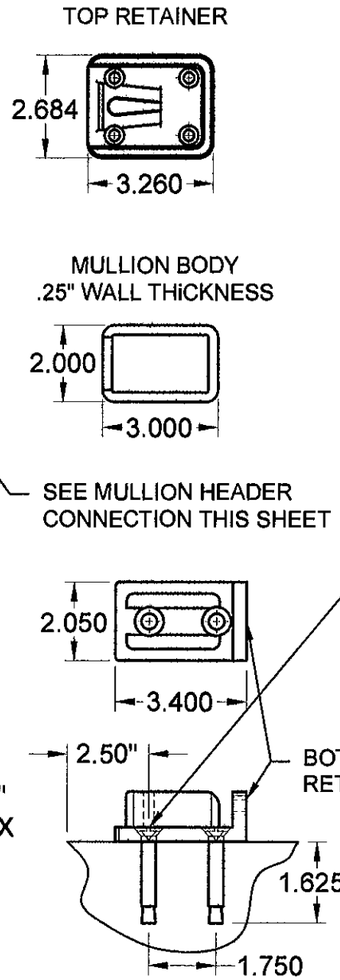

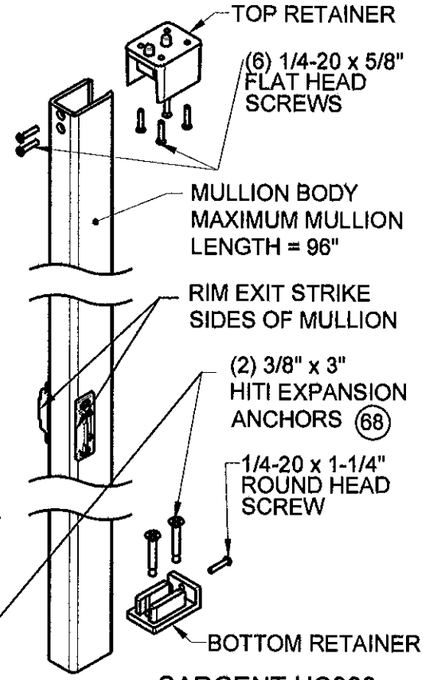

SARGENT HC980 REMOVABLE STEEL MULLION
fy = 39,000 psi MIN.

PRODUCT REVISED
as complying with the Florida Building Code
Acceptance No 09-0709.07
Expiration Date Sept. 16, 2014
By Ishag I. Lhan Jr
Miami Dade Product Control

ROBERT JAMES AMORUSO
LICENSE
No 49752
STATE OF FLORIDA
PROFESSIONAL ENGINEER
1/31/11

ROBERT J. AMORUSO, PE, FL PE #49752

REV	DATE	DESCRIPTION	DR	CK
A	11-15-10	ADD HC 980 MULLION DETAILS, ELEV. WITH MULLION, CH NOTES,DIM. LOCATION ON TRANSOM, CH TITLE	AWS	NTK

DR: T. CROOKS
CK: NJK
SCAN: -----
TOLERANCE: UNLESS OTHERWISE SPECIFIED
DEC± .031
ANG± .5°
FRAC± 1/32
SH SZ: B
SCALE: NTS

CURRIES
MASON CITY, IOWA

TITLE:
CURRIES MODEL 707 OR 747
16 GA. STEEL OUT-SWING DOORS
WITH OR WITHOUT TRANSOM

SH NO: 2 OF 20
DATE: 01-02-04
DWG.NO. RD0259

PTC, LLC PO BOX 520775, LONGWOOD, FL 375252-0775, FBPE Certification of Authorization No. 25935

VERTICAL CROSS SECTIONS (B-B) AND (C-C)

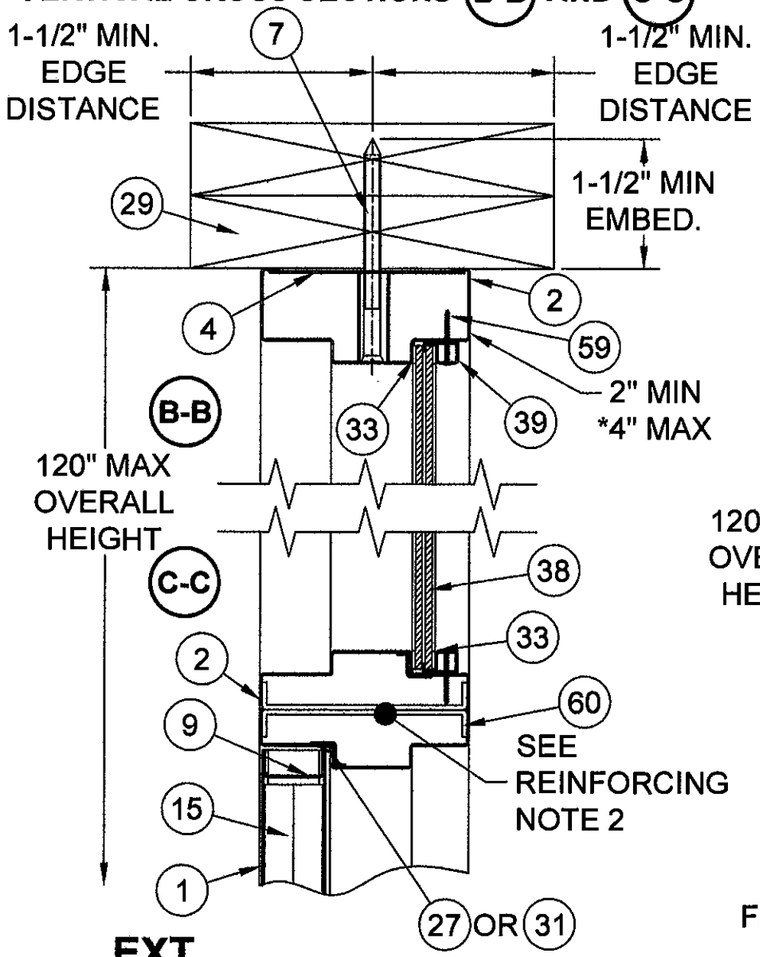

SECTION (B-B) SHOWN WITH 3/8" LAG BOLT IN WOOD BUCK

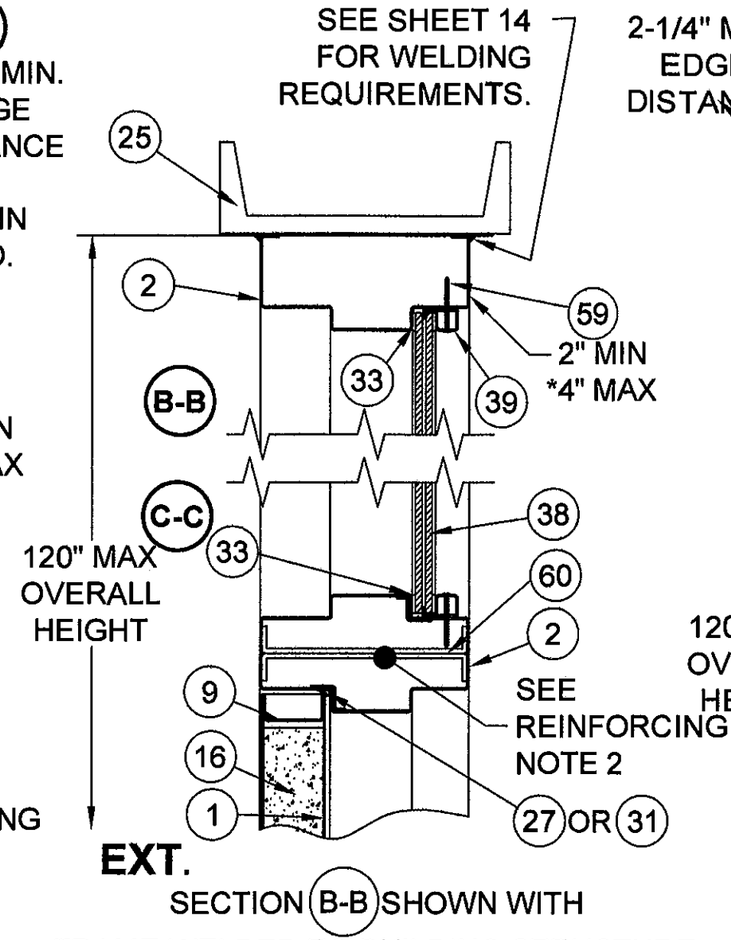

SECTION (B-B) SHOWN WITH FRAME WELDED TO BUILDING STRUCTURE

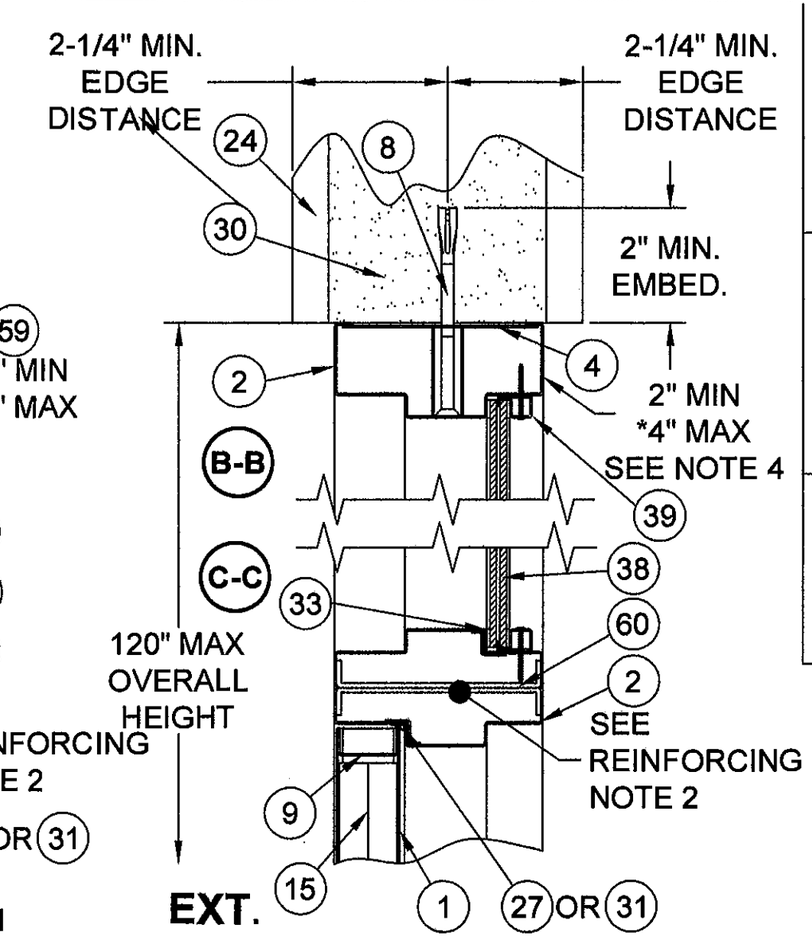

SECTION (B-B) SHOWN WITH 3/8" DIA. EXPANSION SHELL ANCHOR BOLT IN MASONRY

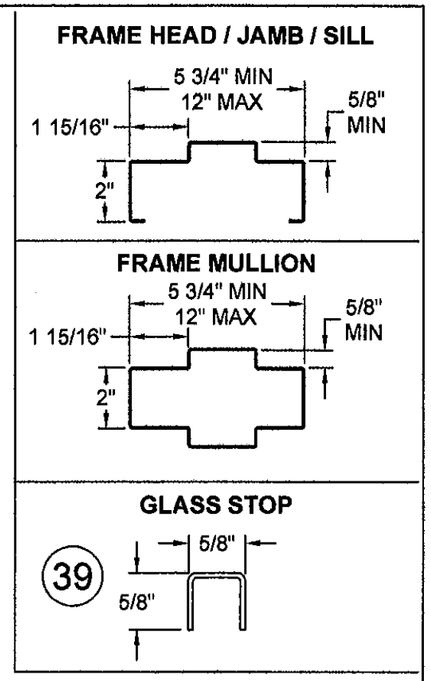

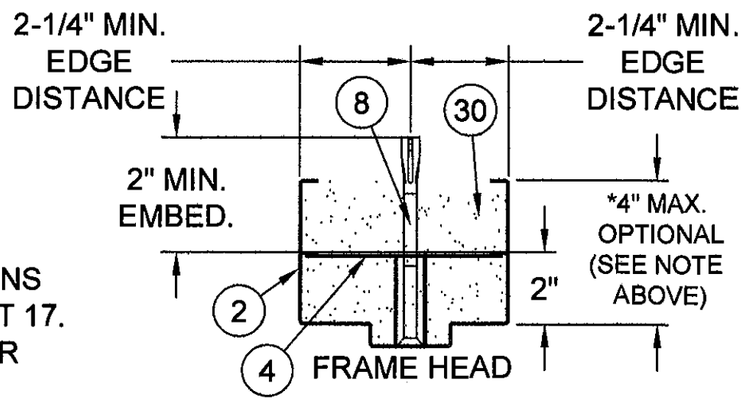

*HEAD SECTION MAY HAVE FACE DIMENSION GREATER THAN 2" WHEN GROUTED WITH CONCRETE, AND WITHIN THE 120" MAX. OVERALL UNIT HEIGHT.

NOTES:

1. SEE SHEET 2 FOR ELEVATIONS.
2. (2) 10 GA. "C" CHANNELS (ITEM 60) REQUIRED FOR HORIZONTAL MULLIONS GREATER THAN 36" LONG, SEE SHEET 17.
3. SEE SHEETS 10, 11, 12, 13, and 14 FOR ANCHOR DETAILS.
4. HEADS WITH FACES GREATER THAN 2" MAY BE USED IF GROUTED FULL.

PRODUCT REVISED
as complying with the Florida Building Code
Acceptance No. 09-0709.07
Expiration Date Sept. 16 2014
By Ishas J. Chanda
Miami Dade Product Control

ROBERT JAMES AMORUSO LICENSE No 49752 STATE OF FLORIDA PROFESSIONAL ENGINEER 1/31/11

ROBERT J. AMORUSO, PE, FL PE #49752

REV	DATE	DESCRIPTION	DR	CK
A	11-15-10	ADD DIM. TO PROFILES CH LGTH OF BOLT, TITLE, MOVED SECT D, E TO SHT 4	AWS	NTK

DR: T. CROOKS
CK: NTK
SCAN: ------
TOLERANCE: UNLESS OTHERWISE SPECIFIED
DEC± .031
ANG± .5°
FRAC± 1/32
SH SZ: B
SCALE: NTS

CURRIES

MASON CITY, IOWA

TITLE: CURRIES MODEL 707 OR 747
16 GA. STEEL OUT-SWING DOORS WITH OR WITHOUT TRANSOM

SH NO: 3 OF 20
DATE: 01-02-04
DWG.NO. RD0259

PTC, LLC PO BOX 520775, LONGWOOD, FL 375252-0775, FBPE Certification of Authorization No. 25938

VERTICAL CROSS SECTIONS (D-D) AND (E-E)

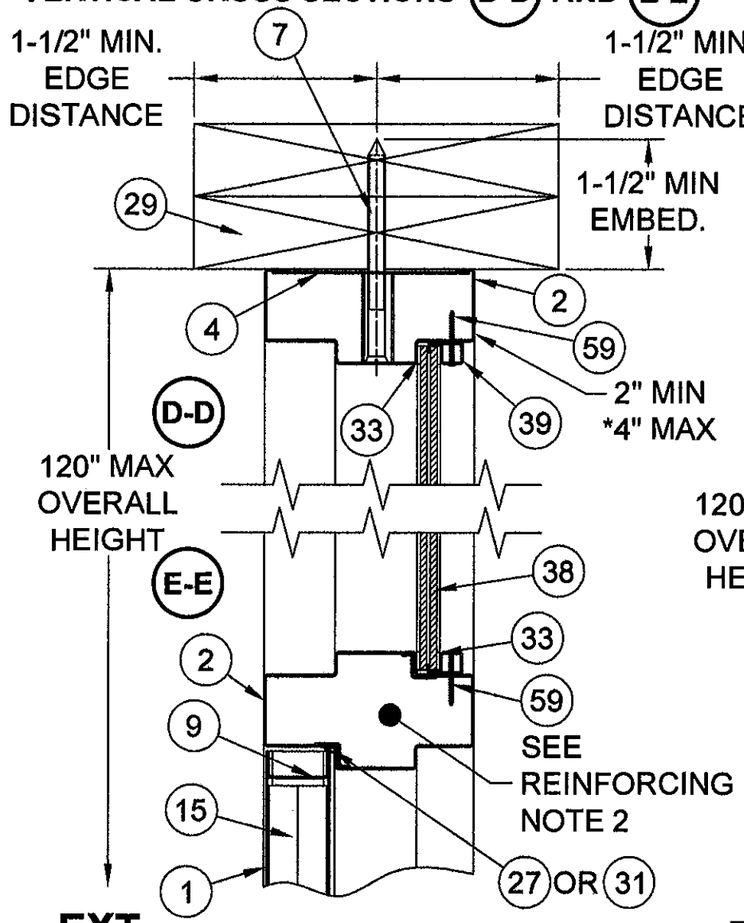

SINGLE DOOR W/ TRANSOM
SECTION (D-D) SHOWN WITH
3/8" LAG BOLT IN WOOD BUCK

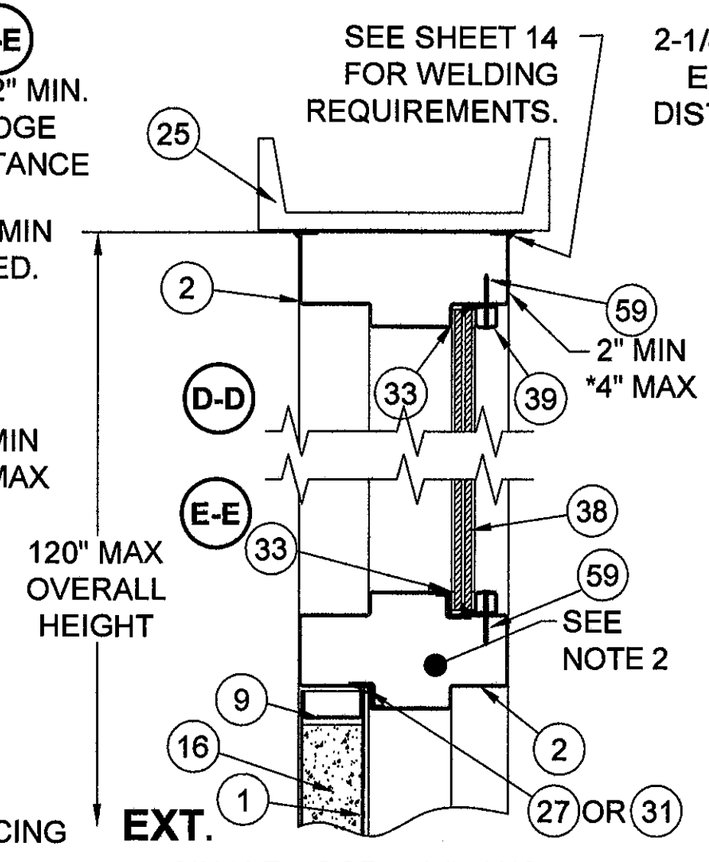

SINGLE DOOR W/ TRANSOM
SECTION (D-D) SHOWN WITH
FRAME WELDED TO BUILDING STRUCTURE

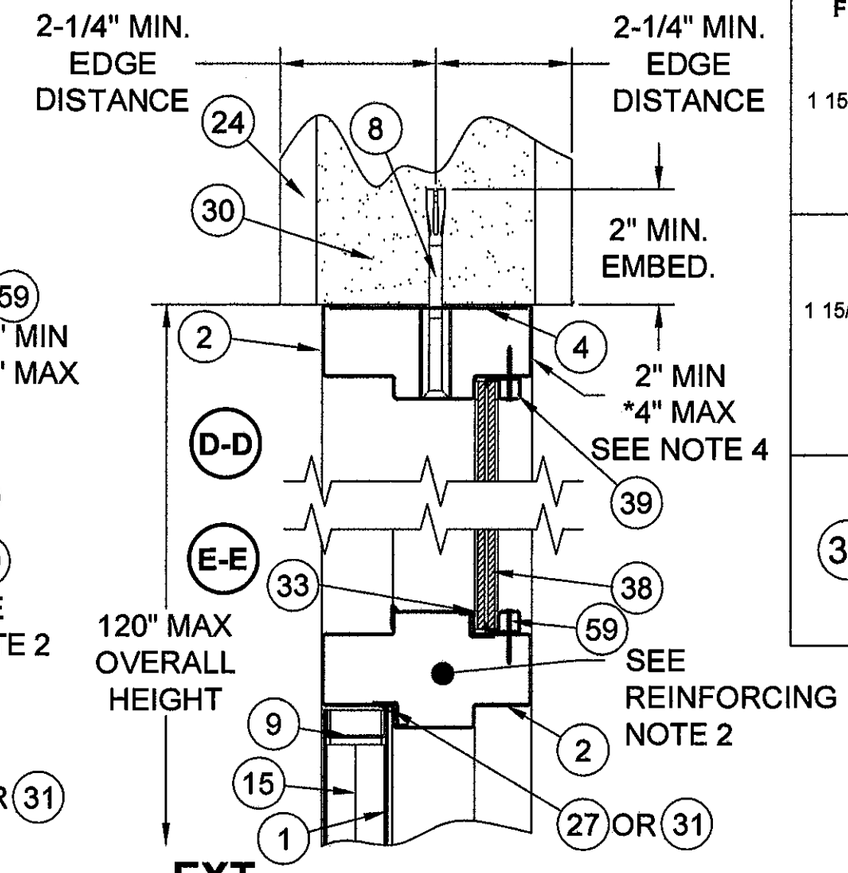

SINGLE DOOR W/ TRANSOM
SECTION (D-D) SHOWN WITH
3/8" DIA. EXPANSION SHELL
ANCHOR BOLT IN MASONRY

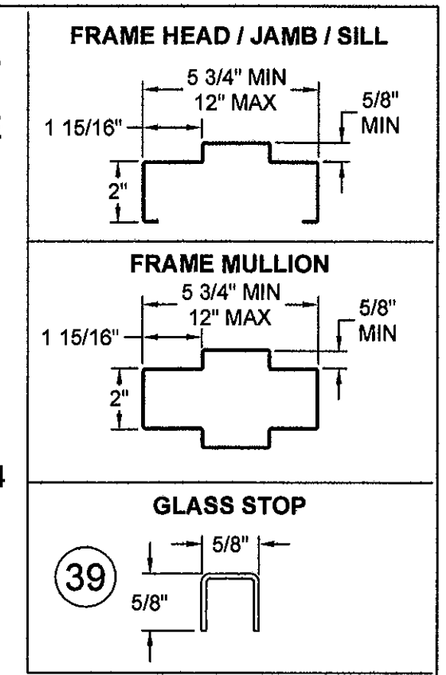

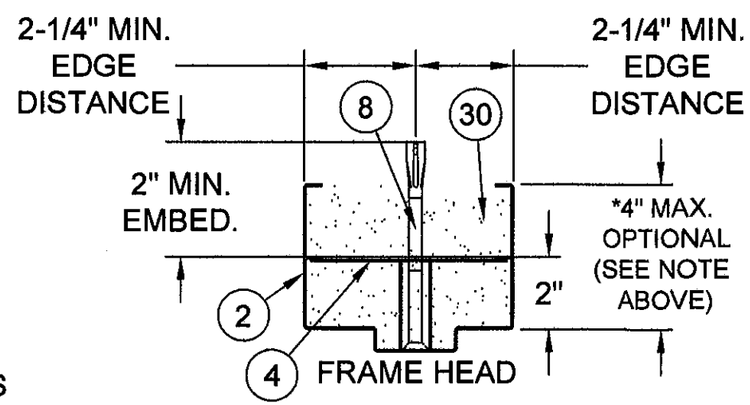

*HEAD SECTION MAY HAVE FACE DIMENSION GREATER THAN 2" WHEN GROUTED WITH CONCRETE, AND WITHIN THE 120" OVERALL UNIT HEIGHT.

NOTES:

1. SEE SHEET 2 FOR ELEVATIONS.
2. (2) 10 GA. "C" CHANNELS (ITEM 60) NOT REQUIRED FOR HORIZONTAL MULLIONS 36" LONG AND LESS
3. SEE SHEETS 10, 11, 12, 13, AND 14 FOR ANCHOR DETAILS.
4. HEADS WITH FACES GREATER THAN 2"

PRODUCT REVISED
as complying with the Florida Building Code
Acceptance No. 09-0709.07
Expiration Date Sept. 16 2014
By Ishas Chanta
Miami Dade Product Control

ROBERT JAMES AMORUSO
LICENSE No 49752
1/31/11
STATE OF FLORIDA
PROFESSIONAL ENGINEER
ROBERT J. AMORUSO, PE, FL PE #49752

REV	DATE	DESCRIPTION	DR	CK
A	11-15-10	ADD SHEET	AWS	NTK

DR: T. CROOKS
CK: NTK
SCAN: -----
TOLERANCE: UNLESS OTHERWISE SPECIFIED
DEC± .031
ANG± .5°
FRAC± 1/32
SH SZ: B
SCALE: NTS

CURRIES
MASON CITY, IOWA

TITLE:
CURRIES MODEL 707 OR 747
16 GA. STEEL OUT-SWING DOORS
WITH OR WITHOUT TRANSOM

SH NO: 4 OF 20
DATE: 01-02-04
DWG.NO. RD0259

VERTICAL CROSS SECTIONS (F-F) AND (G-G)

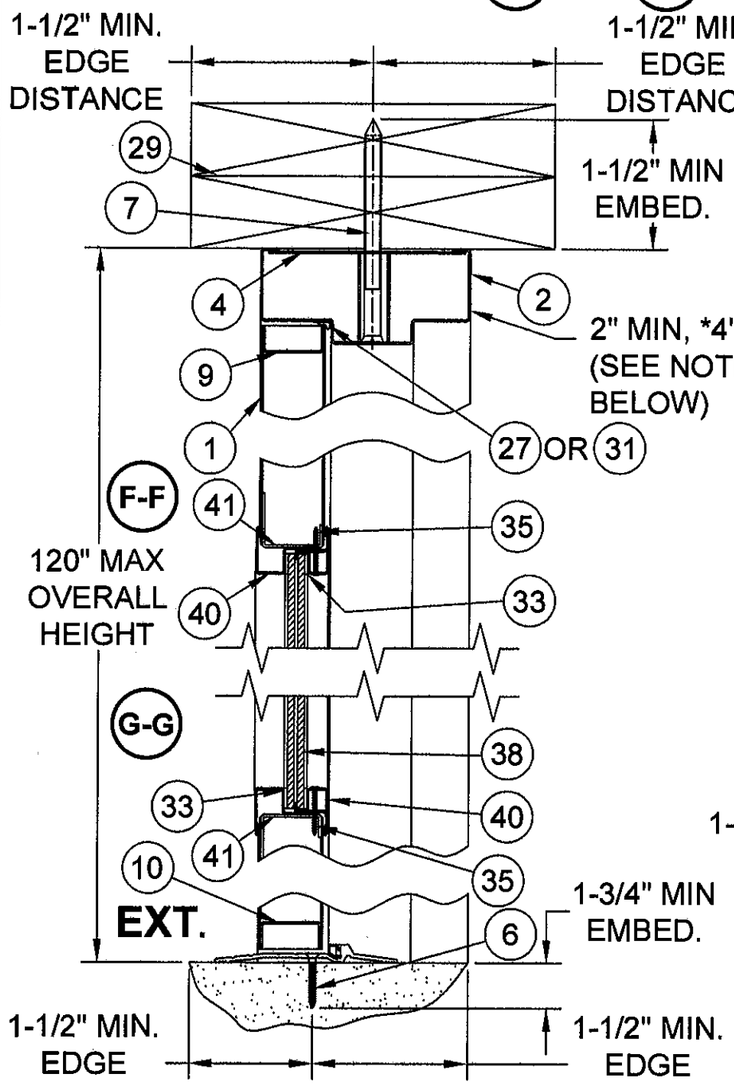

SECTION (F-F) SHOWN WITH 3/8" LAG BOLT IN WOOD BUCK

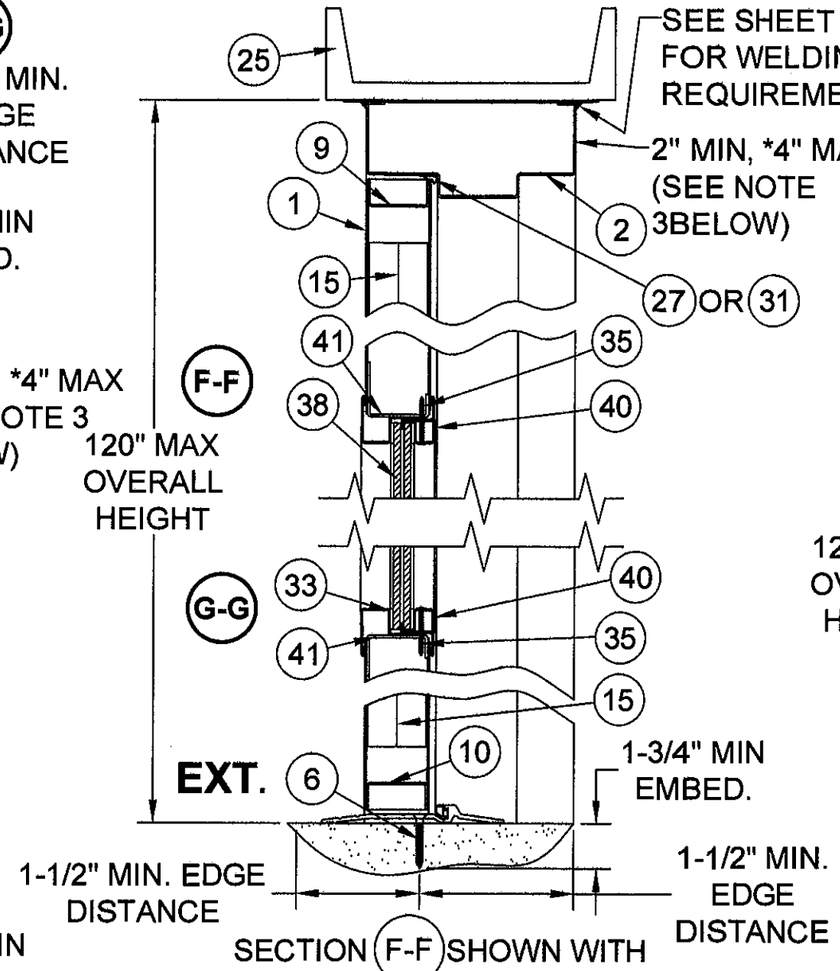

SECTION (F-F) SHOWN WITH FRAME WELDED TO BUILDING STRUCTURE

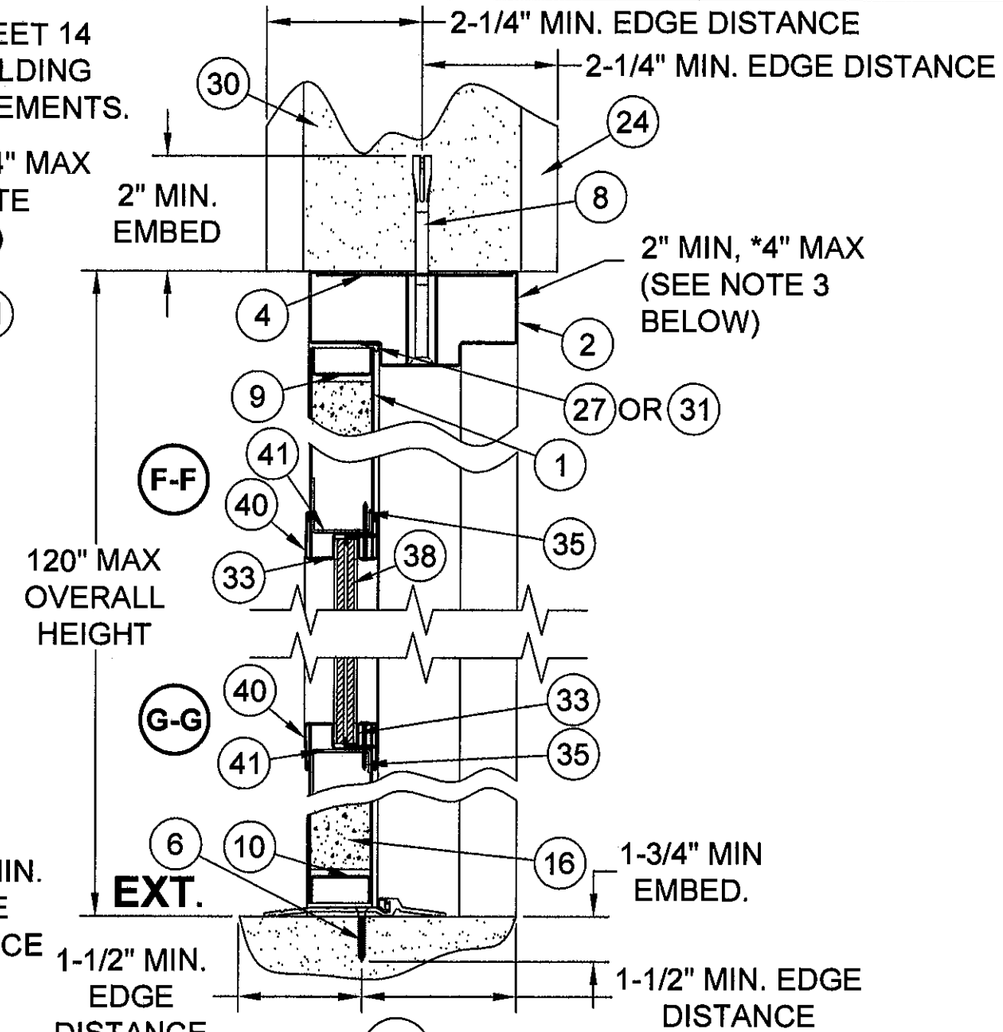

SECTION (F-F) SHOWN WITH 3/8" DIA. EXPANSION SHELL ANCHOR BOLT IN MASONRY

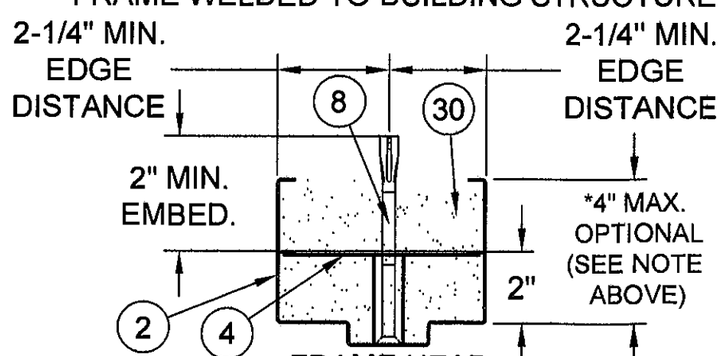

FRAME HEAD

*HEAD SECTION MAY HAVE FACE DIMENSION GREATER THAN 2" WHEN GROUTED WITH CONCRETE, AND WITHIN THE OVERALL UNIT HEIGHT.

NOTES:

1. SEE SHEET 2 FOR ELEVATIONS.
2. SEE SHEETS 10, 11, 12, 13, & 14 FOR ANCHOR DETAILS.
3. HEADS WITH FACES GREATER THAN 2". MAY BE USED IF GROUTED FULL, WITHIN MAX OVERALL HEIGHT
4. MAXIMUM DOOR UNDER CUT 3/8".

PRODUCT REVISED as complying with the Florida Building Code
Acceptance No. 04-0709.01
Expiration Date Sept. 16 2014
By Ishaq I. Chand
Miami Dade Product Control

ROBERT JAMES AMORUSO LICENSE No 49752 STATE OF FLORIDA PROFESSIONAL ENGINEER 1/31/11

ROBERT J. AMORUSO, PE, FL PE #49752

A	11-15-10	REMOVE EXP. VIEW CH LGTH OF BOLT, TITLE	AWS	NTK
REV	DATE	DESCRIPTION	DR	CK
DR: T. CROOKS		CURRIES MASON CITY, IOWA		
CK: NTK				
SCAN: -----				
TOLERANCE: UNLESS OTHERWISE SPECIFIED		TITLE: CURRIES MODEL 707 OR 747 16 GA. STEEL OUT-SWING DOORS WITH OR WITHOUT TRANSOM		
DEC± .031				
ANG± .5°				
FRAC± 1/32				
SH SZ: B		SH NO: 5 OF 20	DWG.NO.	
SCALE: NTS		DATE: 01-02-04	RD0259	

HORIZONTAL CROSS SECTIONS (H), (I), (J) AND (K)

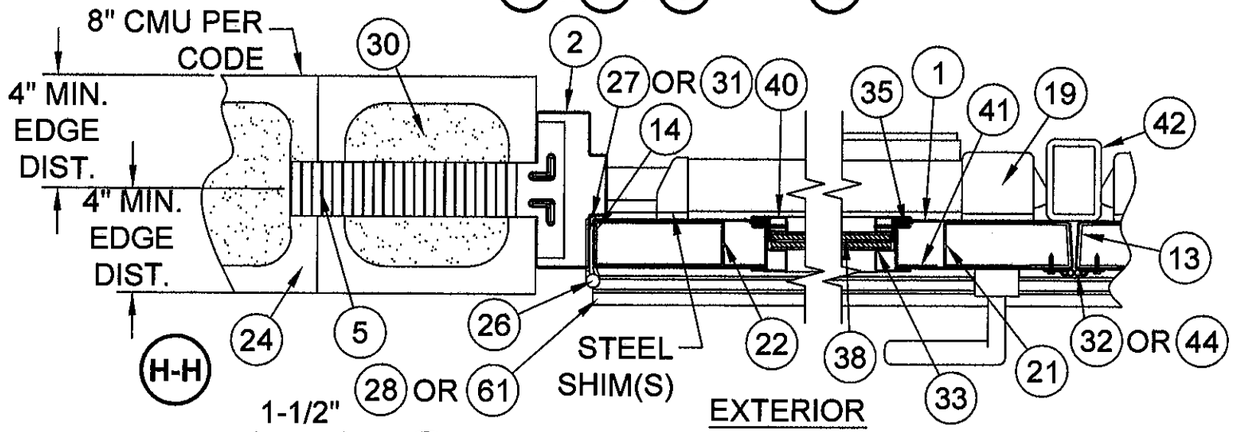

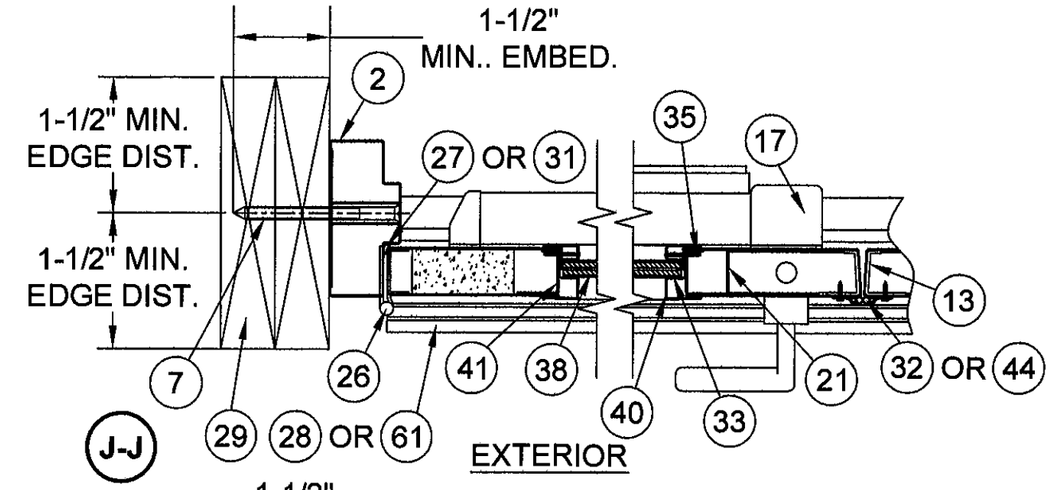

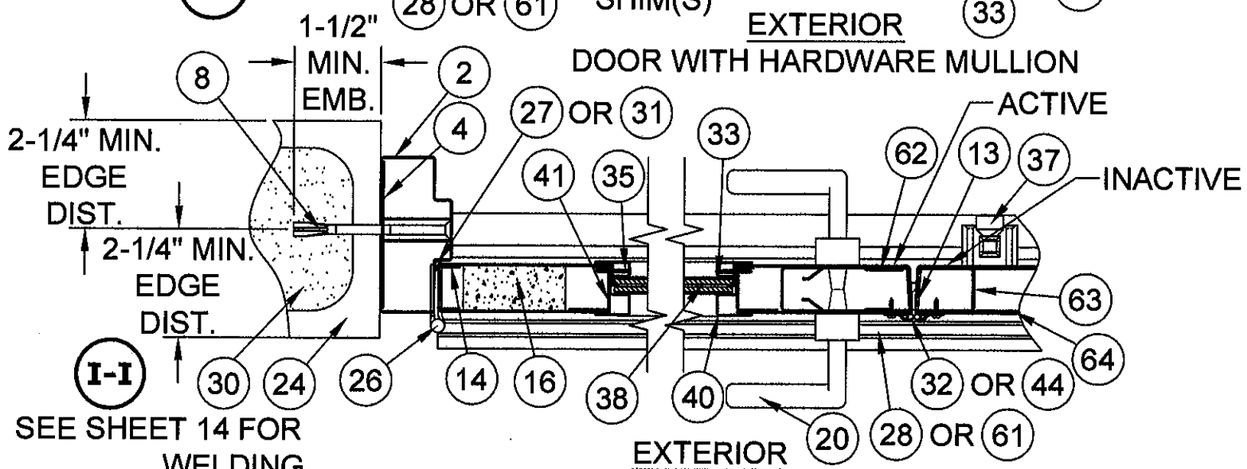

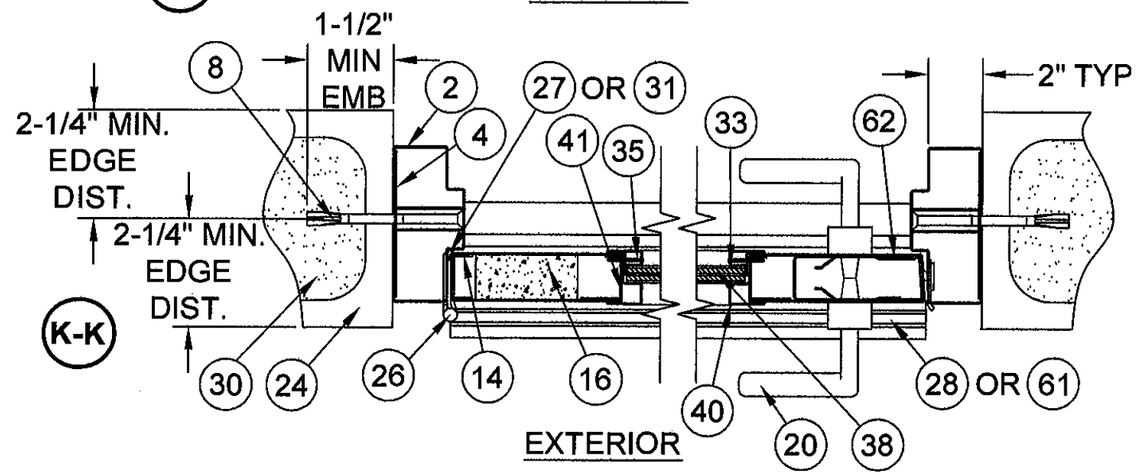

SEE SHEET 14 FOR WELDING REQUIREMENTS

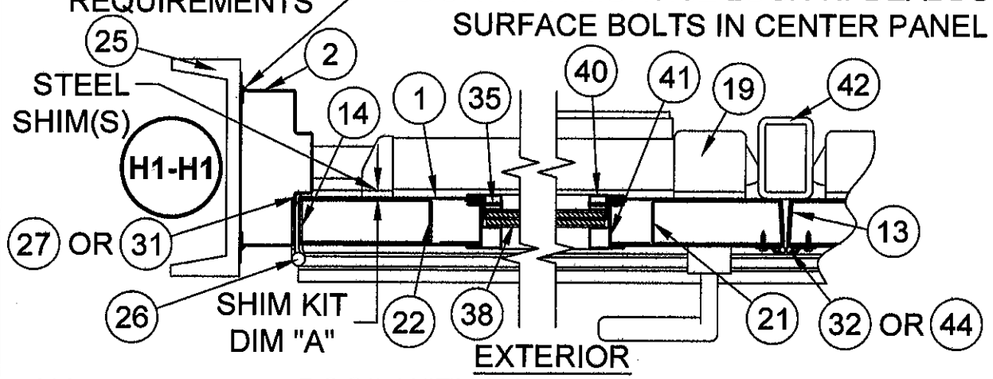

STEEL SHIM KTI REQUIREMENTS	
DIMENSION "A"	RIM EXIT DEVICE W/ WO MULLION
1/4" MAX	SARGENT HC8800

NOTE: A ¼" MAXIMUM SINGLE STEEL SHIM OR MULTIPLE 1/8" THICK MINIMUM SHIMS MAY BE USED TO OBTAIN THE REQUIRED SHIM THICKNES AT THE RIM EXIT DEVICE

NOTES:

1. SECTION H IS SHOWN WITH MASONRY T ANCHOR.
2. SECTION I AND K ARE SHOWN WITH ⅜" DIA. EXPANSION SHELL ANCHOR BOLT
3. SECTION H1 IS SHOWN WITH FRAME WELDED TO STEEL STRUCTURE.
4. SECTION J IS SHOWN WITH WOOD BUCK WITH ⅜" DIA. LAG BOLTS.
5. SEE SHEET 2 FOR ELEVATIONS.

PRODUCT REVISED
as complying with the Florida Building Code
Acceptance No. 04-0701.07
Expiration Date Sept. 16, 2014
By Ishaq I. Chanda
Miami Dade/Product Control

ROBERT JAMES AMORUSO
LICENSE
No 49752
STATE OF FLORIDA
PROFESSIONAL ENGINEER
1/31/11
ROBERT J. AMORUSO, PE, FL PE #49752

REV	DATE	DESCRIPTION	DR	CK
A	11-15-10	ADD "EXTERIOR" TO VIEWS, MAX TO DIM A, CH LGTH OF BOLT, ADD SINGLE DOOR CROSS SECTION "5", CH TITLE	AWS	NTK

DR: T. CROOKS
CK: NTK
SCAN: -----
TOLERANCE: UNLESS OTHERWISE SPECIFIED
DEC± .031
ANG± .5°
FRAC± 1/32
SH SZ: B
SCALE: NTS

CURRIES
MASON CITY, IOWA

TITLE:
CURRIES MODEL 707 OR 747
16 GA. STEEL OUT-SWING DOORS
WITH OR WITHOUT TRANSOM

SH NO: 6 OF 20
DATE: 01-02-04
DWG.NO. RD0259

HORIZONTAL CROSS SECTION (A-A) AND (L-L)

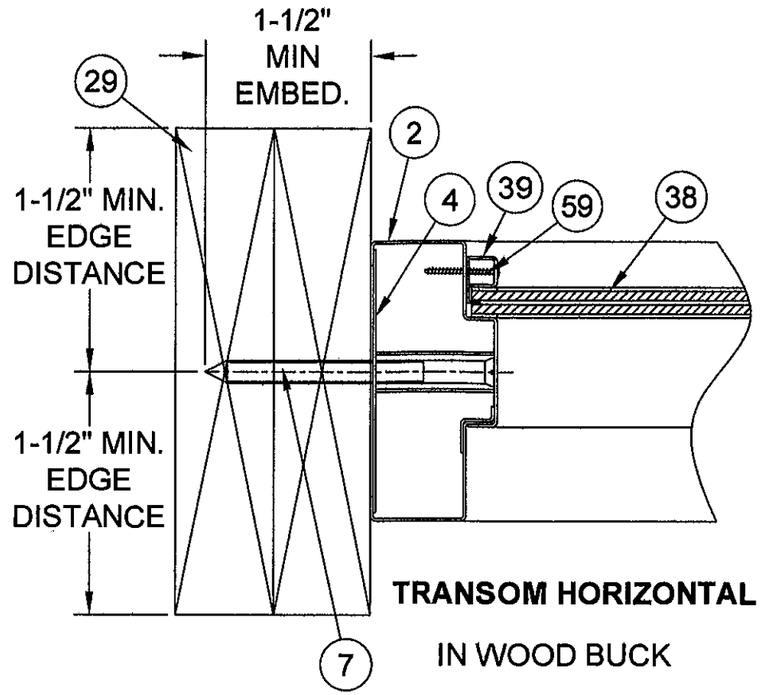

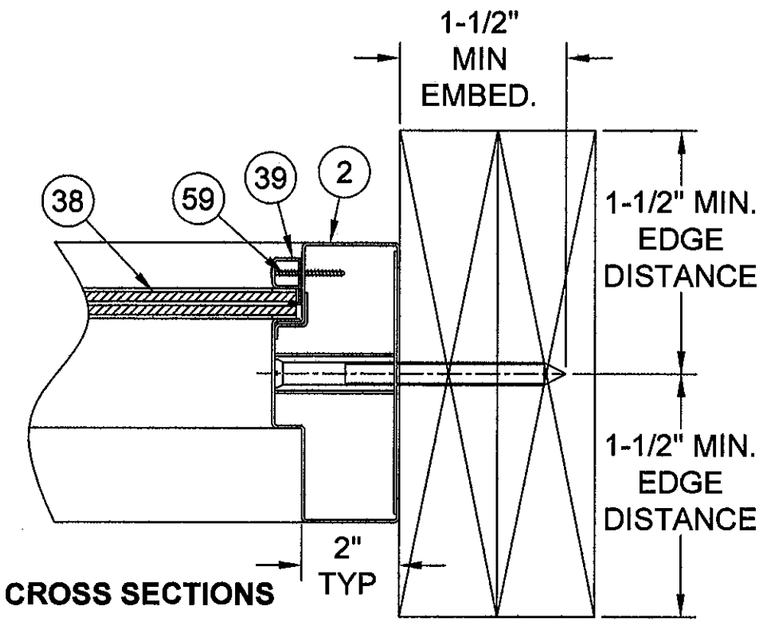

TRANSOM HORIZONTAL CROSS SECTIONS

IN WOOD BUCK

(A-A) **EXTERIOR**

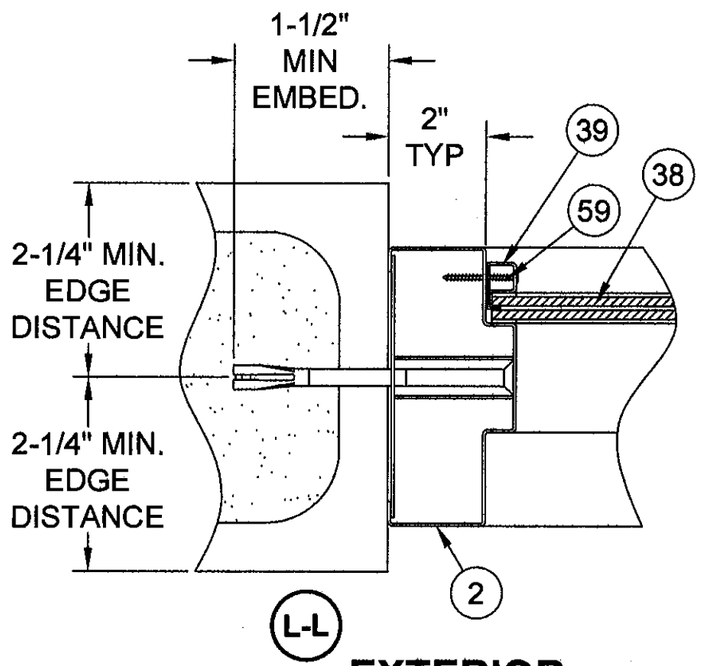

EXTERIOR

TRANSOM HORIZONTAL CROSS SECTIONS

NOTES:

1. SEE SHEET 1 AND 2 FOR ELEVATOINS.
2. SEE SHEET 9 FOR ADDITIONAL TRANSOM GLASS DETAILS

PRODUCT REVISED
as complying with the Florida
Building Code
Acceptance No 09-0709.07
Expiration Date Sept. 16 2014
By Ishaq I. Chan
Miami Dade Product Control

ROBERT JAMES AMORUSO
LICENSE
No 49752
1/31/11
STATE OF
FLORIDA
PROFESSIONAL ENGINEER

ROBERT J. AMORUSO, PE, FL PE #49752

REV	DATE	DESCRIPTION	DR	CK
A	11-15-10	ADD 2 CROSS SECTIONS SHOWING MASONRY PROFILE WITH GLASS AND PANEL, CH TITLE, REM. SIDELIGHTS	AWS	NTK

DR: T. CROOKS
CK: NTK
SCAN: -----
TOLERANCE: UNLESS OTHERWISE SPECIFIED
DEC± .031
ANG± .5°
FRAC± 1/32
SH SZ: B
SCALE: NTS

CURRIES
MASON CITY, IOWA

TITLE:
CURRIES MODEL 707 OR 747
16 GA. STEEL OUT-SWING DOORS
WITH OR WITHOUT TRANSOM

SH NO: 7 OF 20
DATE: 01-02-04
DWG.NO.
RD0259

VISION LIGHT KITS GLAZING

CURRIES TYPE 2 VISION LIGHT KIT GLAZING
0.472" OVERALL THICKNESS
LAMINATED GLASS COMPOSED OF:
TWO PIECES OF 3/16" THICK ANNEALED GLASS
WITH A 0.097" THICK GLASSLAM SAFETY PLUS II INTERLAYER
BY NEBULA GLASS INTERNATIONAL

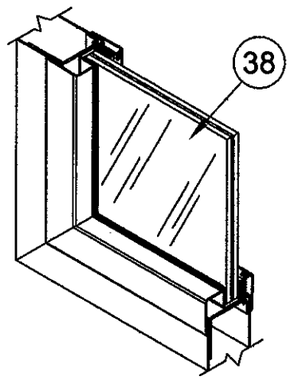

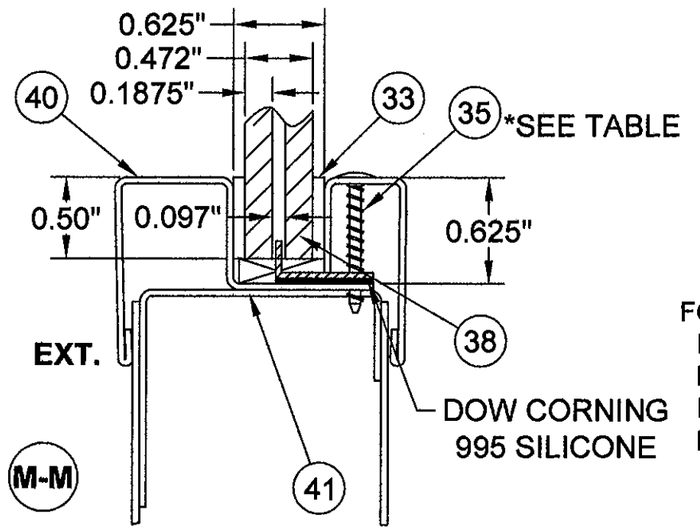

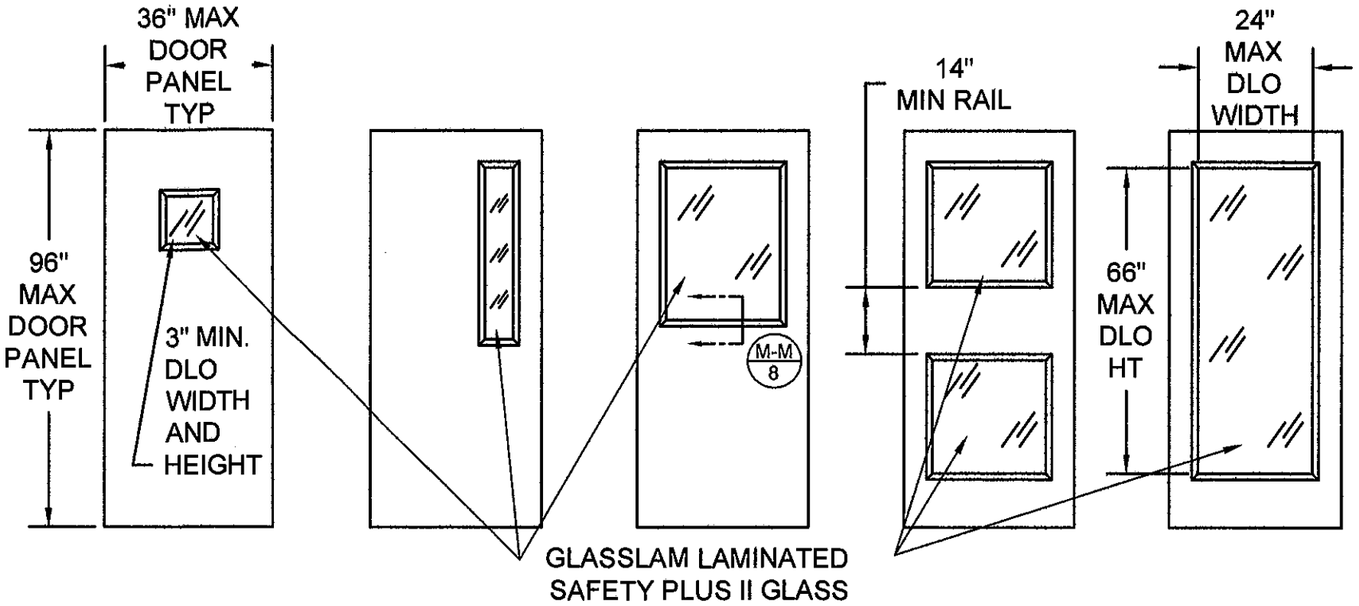

FOR OPTIONAL GLAZING, VISIBLE DAYLIGHT OPENING (DLO):
MINIMUM VISIBLE WIDTH 3", MAXIMUM VISIBLE WIDTH 24"
MINIMUM VISIBLE HEIGHT 3", MAXIMUM VISIBLE HEIGHT 66"
NOT TO EXCEED VISIBLE AREA OF 1584 SQUARE INCHES PER LEAF;
MULTIPLE LIGHTS ALLOWED

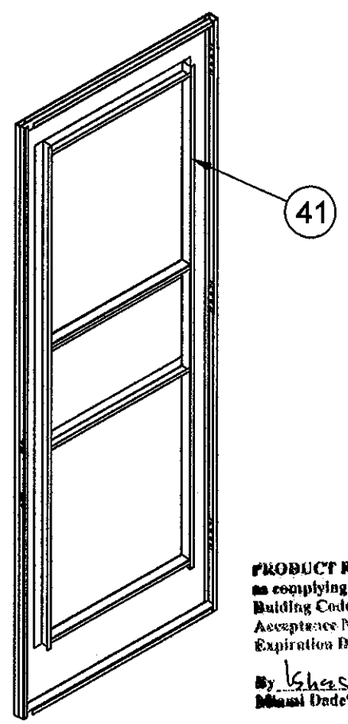

LENGTH OF VISION LIGHT KIT PIECE	*ITEM 35 - MIN. REQ'D NO. OF SCREWS PER SIDE
3" - 7"	1
8" - 13"	2
14" - 21"	3
22" - 29"	4
30" - 38"	5
39" - 47"	6
48" - 54"	7
55" - 62"	8
63" - 66"	9

*8-1/4" MAX ON CENTER SPACING

NOTES:
1. VISION LIGHT KTS WITH GLAZING AS SHOWN, MAY BE USED IN SINGLE DOORS AND PAIRS OF DOORS.

PRODUCT REVISED
in complying with the Florida Building Code
Acceptance No. 09-0709.07
Expiration Date Sept. 16, 2014
By Ishas L. Chand
Miami Dade Product Control

ROBERT JAMES AMORUSO
LICENSE
No 49752
STATE OF
FLORIDA
PROFESSIONAL ENGINEER
1/31/11
ROBERT J. AMORUSO, PE, FL PE #49752

REV	DATE	DESCRIPTION	DR	CK
A	11-15-10	CH NOTES, REMOVE TRANSOM ELEVATIONS, ADD FV, AND FG FACE TYPES, CH TITLE, ADD VIEW OF FG2 WITH SURROUND	AWS	NTK

DR: T. CROOKS
CK: NTK
SCAN: -----
TOLERANCE: UNLESS OTHERWISE SPECIFIED
DEC± .031
ANG± .5°
FRAC± 1/32
SH SZ: B
SCALE: NTS

CURRIES
MASON CITY, IOWA

TITLE:
CURRIES MODEL 707 OR 747
16 GA. STEEL OUT-SWING DOORS
WITH OR WITHOUT TRANSOM

SH NO: 8 OF 20
DATE: 01-02-04
DWG.NO. RD0259

PTC, LLC PO BOX 520775, LONGWOOD, FL 375252-0775, FBPE Certification of Authorization No. 25935

FRAME GLAZING

FRAME GLAZING
0.472" OVERALL THICKNESS LAMINATED GLASS COMPOSED OF:
TWO PIECES OF 3/16" THICK ANNEALED GLASS WITH A 0.097" THICK GLASSLAM SAFETY PLUS II INTERLAYER BY NEBULA GLASS INTERNATIONAL (item #38) 3/31/11

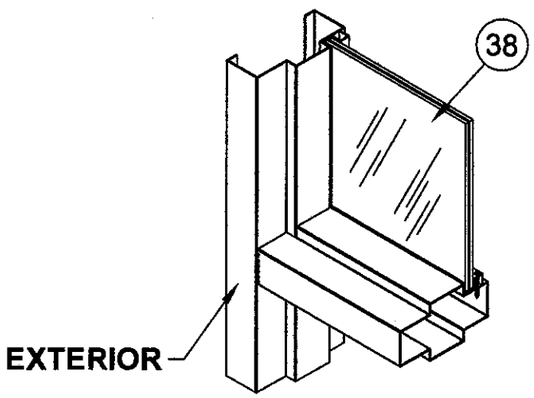

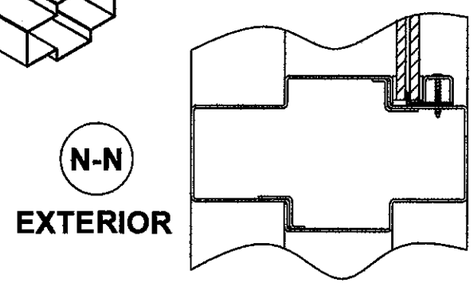

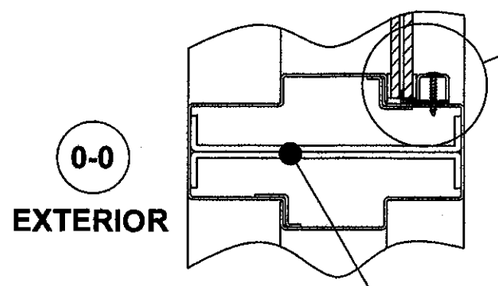

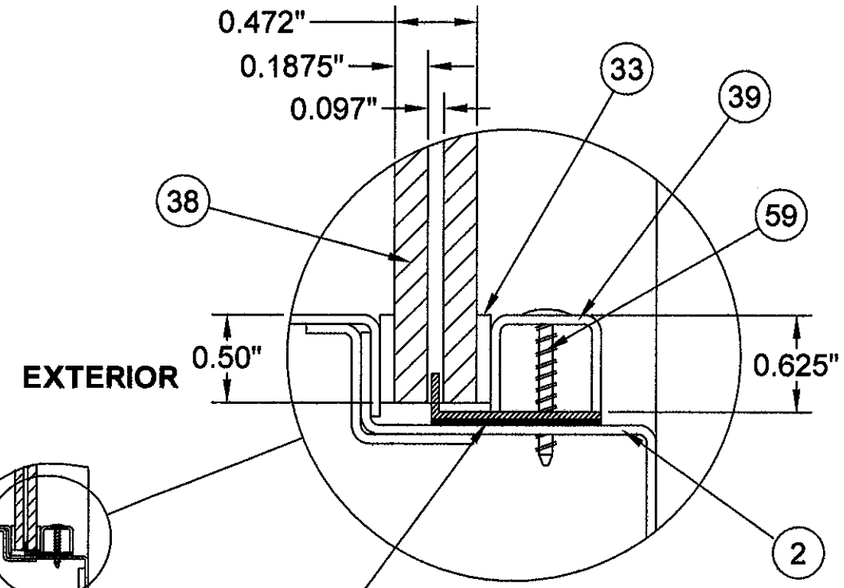

DOW CORNING 995 SILICONE

(2) 10 GA. "C" CHANNELS (ITEM 60) REQUIRED IN HORIZONTAL MULLIONS GREATER THAN 36" LONG, SEE SHEET 15.

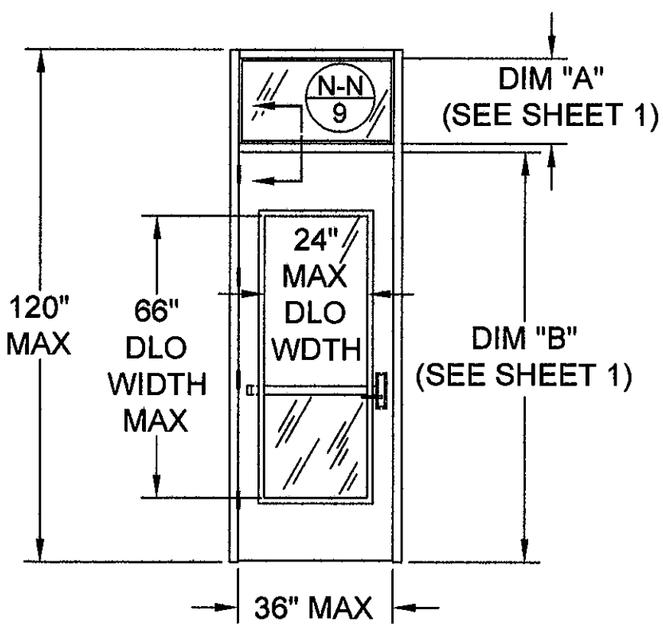

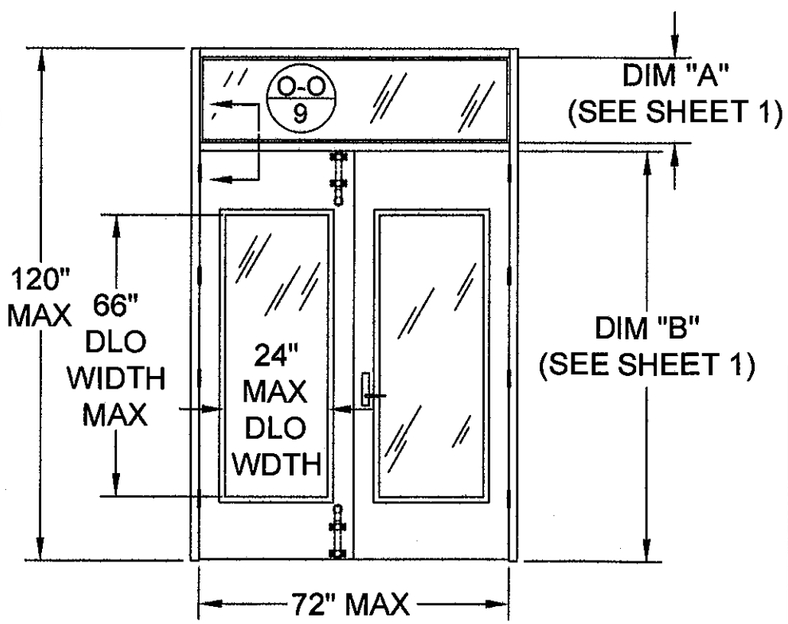

NOTES:
1.) GLASS STOP SCREWS (ITEM 59) LOCATED 2" FROM END OF THE GLASS STOP (ITEM 39) AND 6" ON CENTER MAXIMUM
2.) SEE TABLE ON SHEET 1 FOR DIMENSIONS "A" AND "B"

PRODUCT REVISED
as complying with the Florida Building Code
Acceptance No 04-0709.07
Expiration Date Sept. 16 2014
By Craig L. Chenault
Miami Dade Product Control

ROBERT JAMES AMORUSO LICENSE No 49752 STATE OF FLORIDA PROFESSIONAL ENGINEER 1/31/11

ROBERT J. AMORUSO, PE, FL PE #49752

REV	DATE	DESCRIPTION	DR	CK
A	11-15-10	CH MULLION NOTE TO QTY 2 OF C CHANNEL; ADD GLASS MANF. TO GLAZING NOTE, CH TITLE; CH O TO P, ADD NEW O	AWS	NTK

DR: T. CROOKS
CK: NTK
SCAN: -----
TOLERANCE: UNLESS OTHERWISE SPECIFIED
DEC± .031
ANG± .5°
FRAC± 1/32
SH SZ: B
SCALE: NTS

CURRIES
MASON CITY, IOWA

TITLE:
CURRIES MODEL 707 OR 747
16 GA. STEEL OUT-SWING DOORS
WITH OR WITHOUT TRANSOM

SH NO: 9 OF 20
DATE: 01-02-04
DWG.NO. RD0259

MASONRY T ANCHORS (CLUSTERED ANCHORS REQ'D AT SILL FOR LOCK OPTIONS 1 & 3 W/O MULLION ONLY)

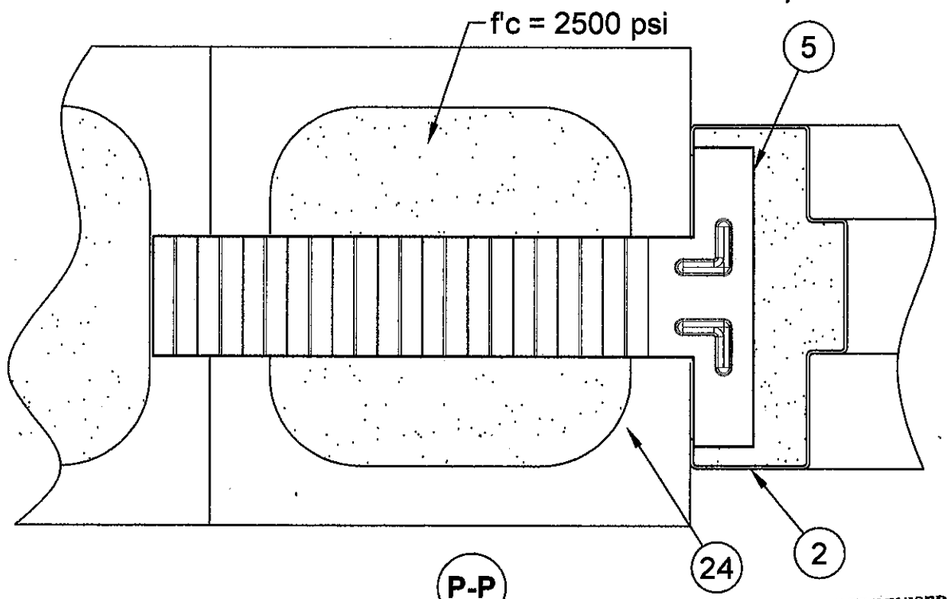

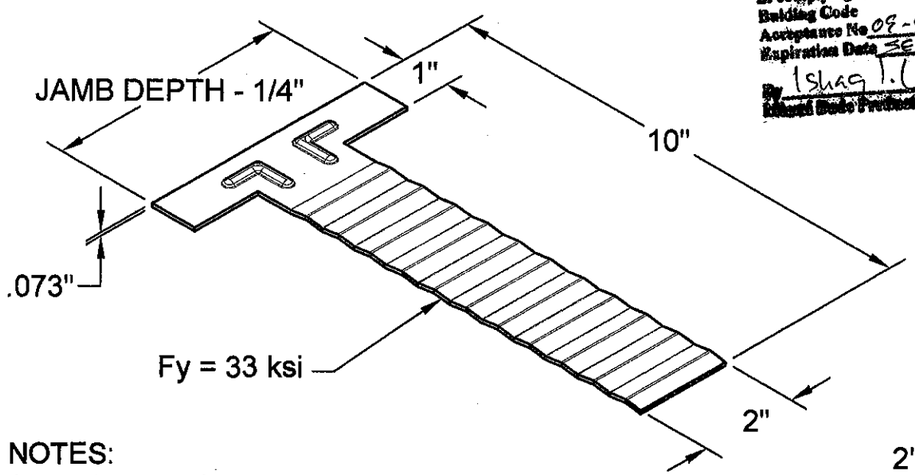

PRODUCT REVISED
as complying with the Florida
Building Code
Acceptance No 08-0709.02
Expiration Date SEP 16, 2014
By Ishag T. Chaudhuri
Miami Dade Product Control

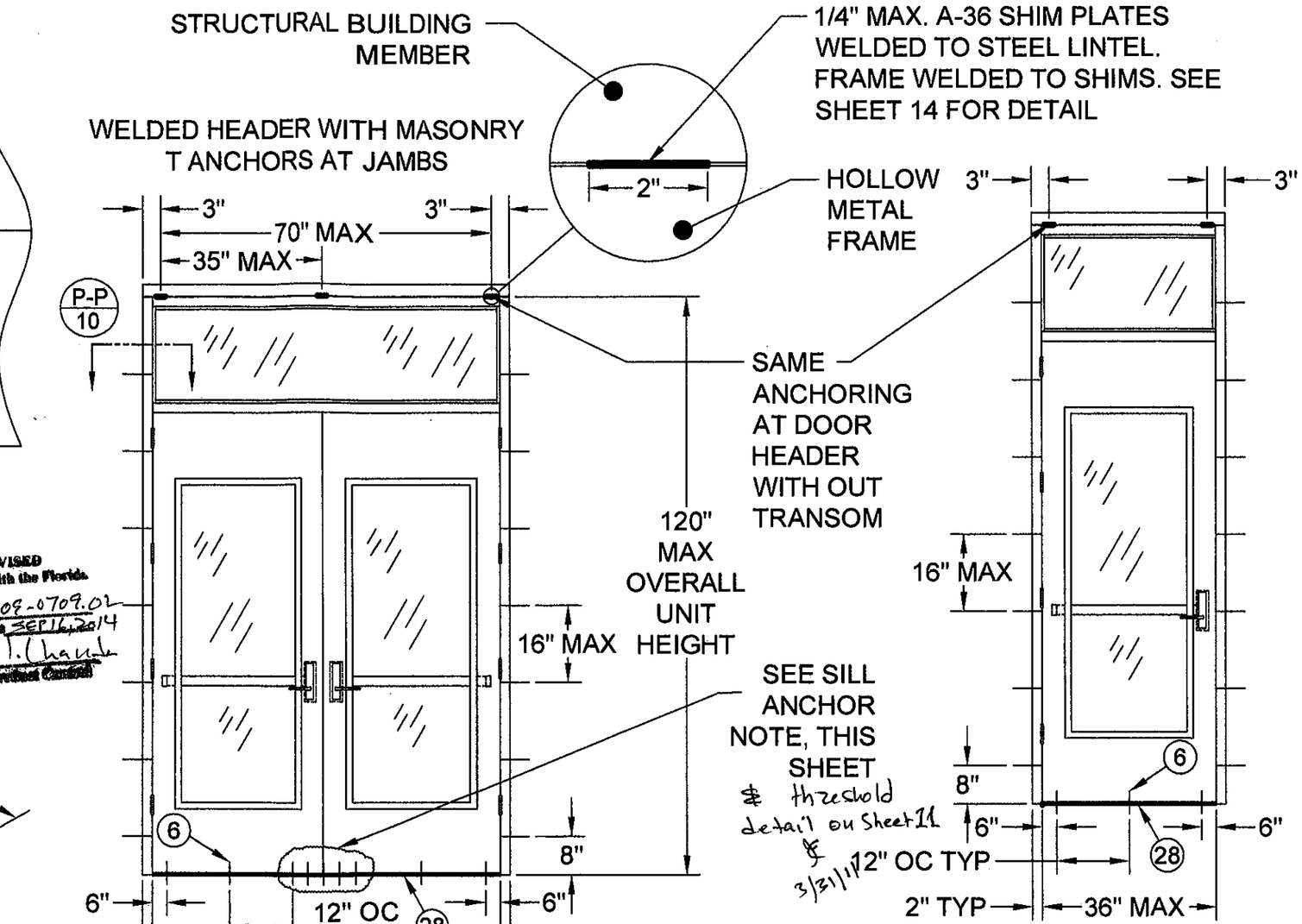

NOTES:

1. DIMENSIONS AT HEAD OF DOOR ELEVATIONS ARE TO ℄ OF SHIMS.
2. HEAD MAY ALSO BE ANCHORED USING PIPE SPACER ANCHORS 3" FROM EACH VERTICAL MEMBER AND SPACED 16" ON CENTER MAX.
3. SEE SHEET 12 FOR PIPE SPACER LOCATIONS AND THRESHOLD ANCHOR DETAIL.
4. SEE SHEET 14 FOR DETAILS OF WELDING FRAME TO BUILDING STRUCTURE.
5. SEE SHEET 12 & 13 FOR THRESHOLD ANCHOR DETAIL.

SILL ANCHOR NOTE

5 CLUSTERED ANCHORS 3" O.C. SPACING REQUIRED FOR LOCK OPTIONS 1 AND 3. FOR LOCK OPTION 2, ONLY 2 ANCHORS AT 12" SPACING REQ'D IN LIEU OF 5 CLUSTERED ANCHORS.

ROBERT JAMES AMORUSO
LICENSE
No 49752
STATE OF FLORIDA
PROFESSIONAL ENGINEER
1/31/11

ROBERT J. AMORUSO, PE, FL PE #49752

REV	DATE	DESCRIPTION	DR	CK
A	11-15-10	CH SHIM LOC. TO 3" IN HEAD, CH SHIM TO 1/4" MAX. CH MASONRY T ANCHOR, CH R TO S, CH TITLE	AWS	NTK

DR: T. CROOKS
CK: NTK
SCAN: -----
TOLERANCE: UNLESS OTHERWISE SPECIFIED
DEC± .031
ANG± .5°
FRAC± 1/32
SH SZ: B
SCALE: NTS

CURRIES
MASON CITY, IOWA

TITLE:
CURRIES MODEL 707 OR 747
16 GA. STEEL OUT-SWING DOORS
WITH OR WITHOUT TRANSOM

SH NO: 10 OF 20
DATE: 01-02-04
DWG.NO. RD0259

PTC, LLC PO BOX 520775, LONGWOOD, FL 375252-0775, FBPE Certification of Authorization No. 25935

PIPE SPACER ANCHORS (CLUSTERED ANCHORS REQ'D AT SILL FOR LOCK OPTIONS 1 & 3 W/O MULLION ONLY)

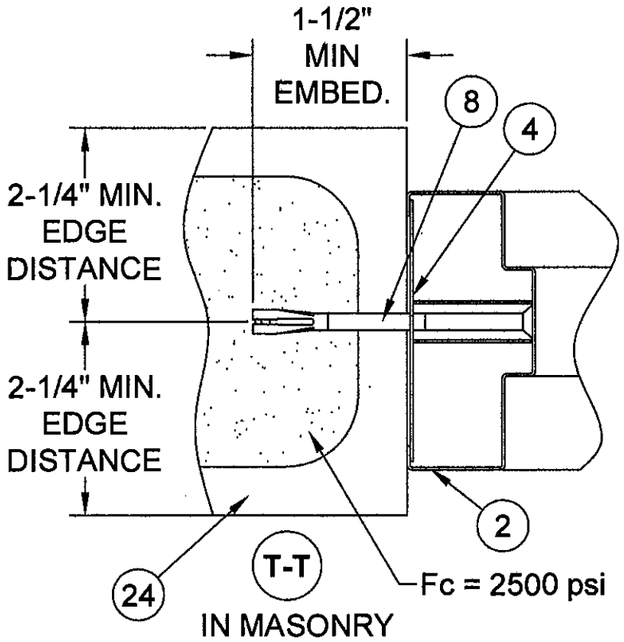

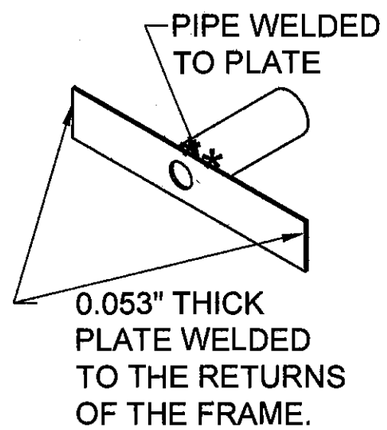

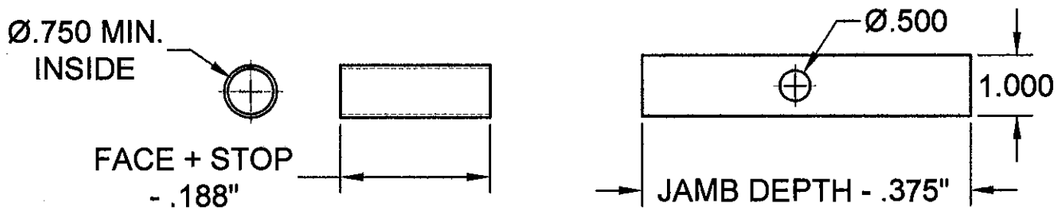

(4) 16 GA. (0.053") PIPE SPACER TO BE USED WITH ITEM (7) OR (8)

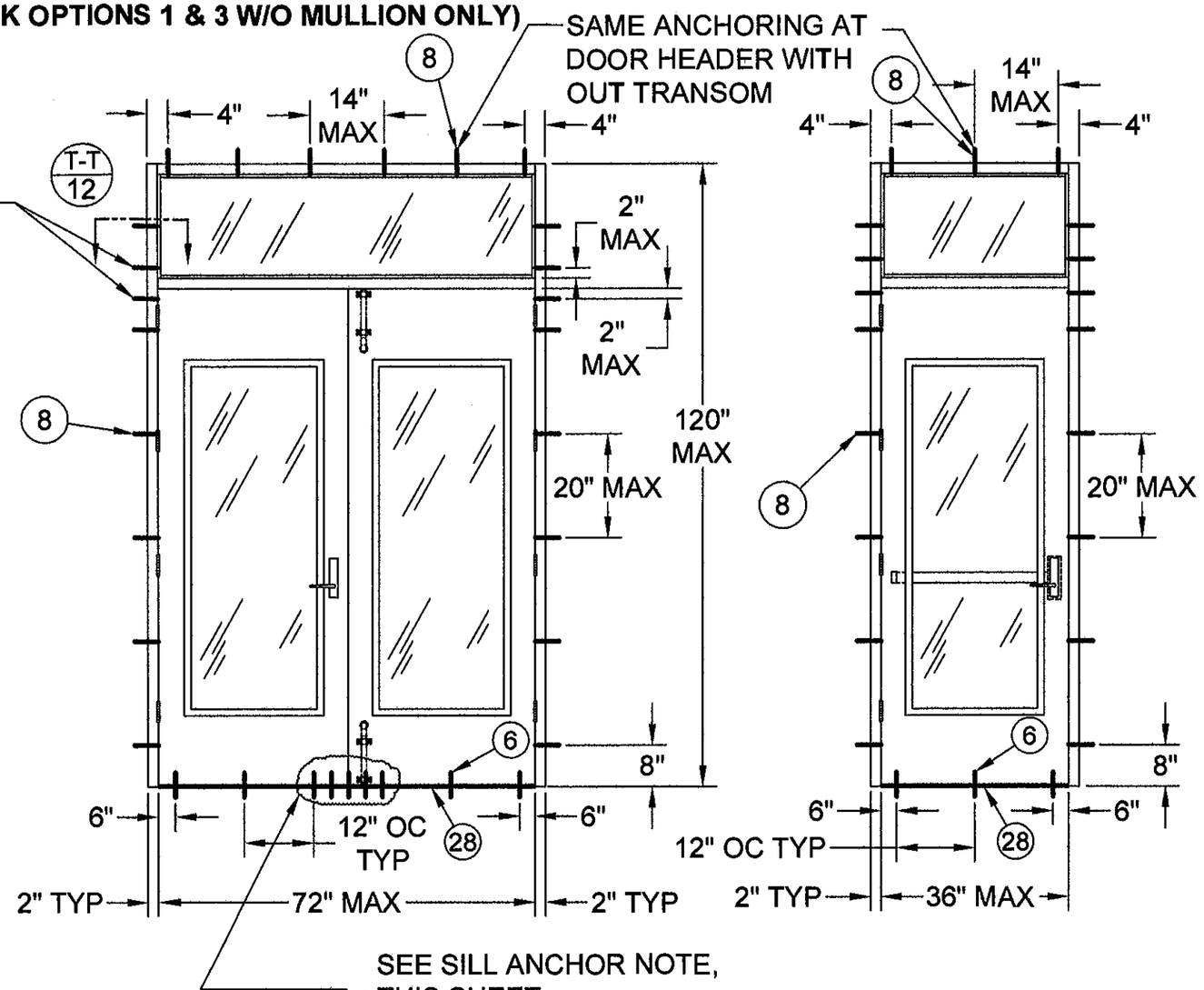

SILL ANCHOR NOTE

5 CLUSTERED ANCHORS 3" O.C. SPACING REQUIRED FOR LOCK OPTIONS 1 AND 3. FOR LOCK OPTION 2, ONLY 2 ANCHORS AT 12" SPACING REQ'D IN LIEU OF 5 CLUSTERED ANCHORS.

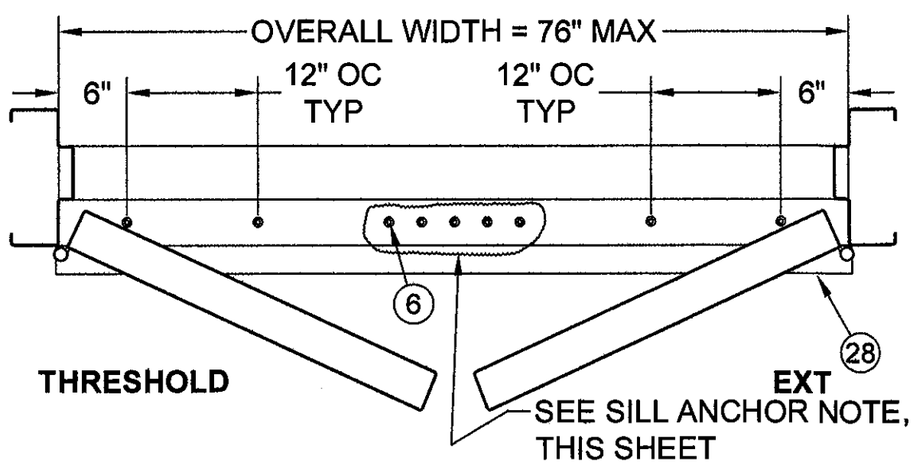

PRODUCT APPROVAL
In complying with the Florida Building Code
Acceptance No. 09-0709.07
Expiration Date Sept. 16 2011
By Ishaq I. Chand
Miami Dade Product Control

ROBERT JAMES AMORUSO LICENSE No 49752 STATE OF FLORIDA PROFESSIONAL ENGINEER 1/31/11
ROBERT J. AMORUSO, PE, FL PE #49752

REV	DATE	DESCRIPTION	DR	CK
A	11-15-10	INCREASED BOLT LGTH, CH TITLE, MOVED WOOD TO SHT 12 & 13	AWS	NTK

DR: T. CROOKS
CK: NTK
SCAN: -----
TOLERANCE: UNLESS OTHERWISE SPECIFIED
DEC± .031
ANG± .5°
FRAC± 1/32
SH SZ: B
SCALE: NTS

CURRIES
MASON CITY, IOWA

TITLE:
CURRIES MODEL 707 OR 747
16 GA. STEEL OUT-SWING DOORS
WITH OR WITHOUT TRANSOM

SH NO: 11 OF 20
DATE: 01-02-04
DWG.NO. RD0259

PIPE SPACER ANCHORS FOR WOOD - DOUBLE DOORS W/MULLION (LOCK OPTIONS 2). SEE SHEET 13 FOR DOUBLE DOORS W/O MULLION (LOCK OPTIONS 1 & 3). - SINGLE DOOR (LOCK OPTIONS 1 & 2).

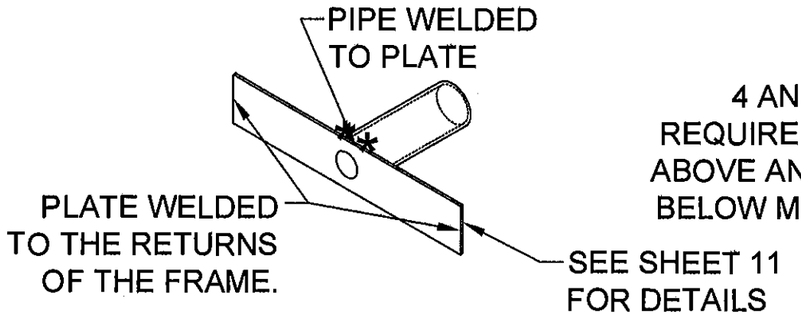

(4) 16 GA. (0.053") PIPE SPACER TO BE USED WITH ITEM (7) OR (8)

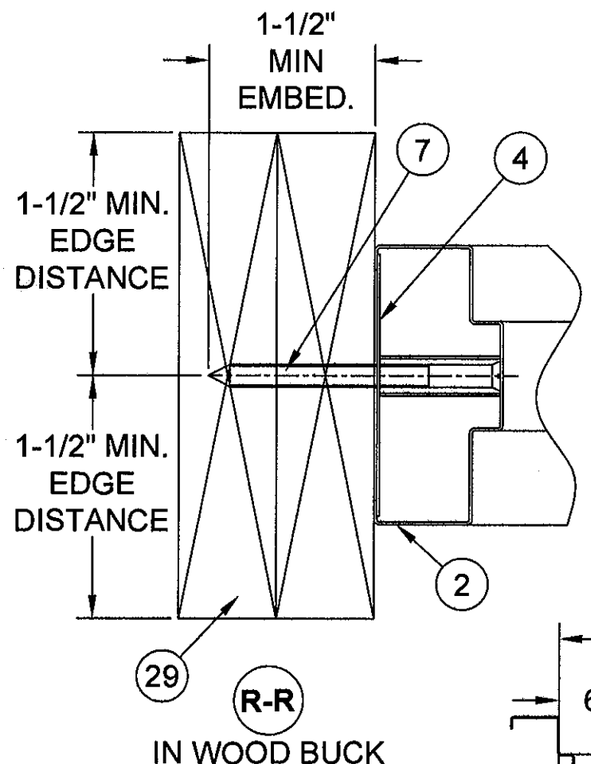

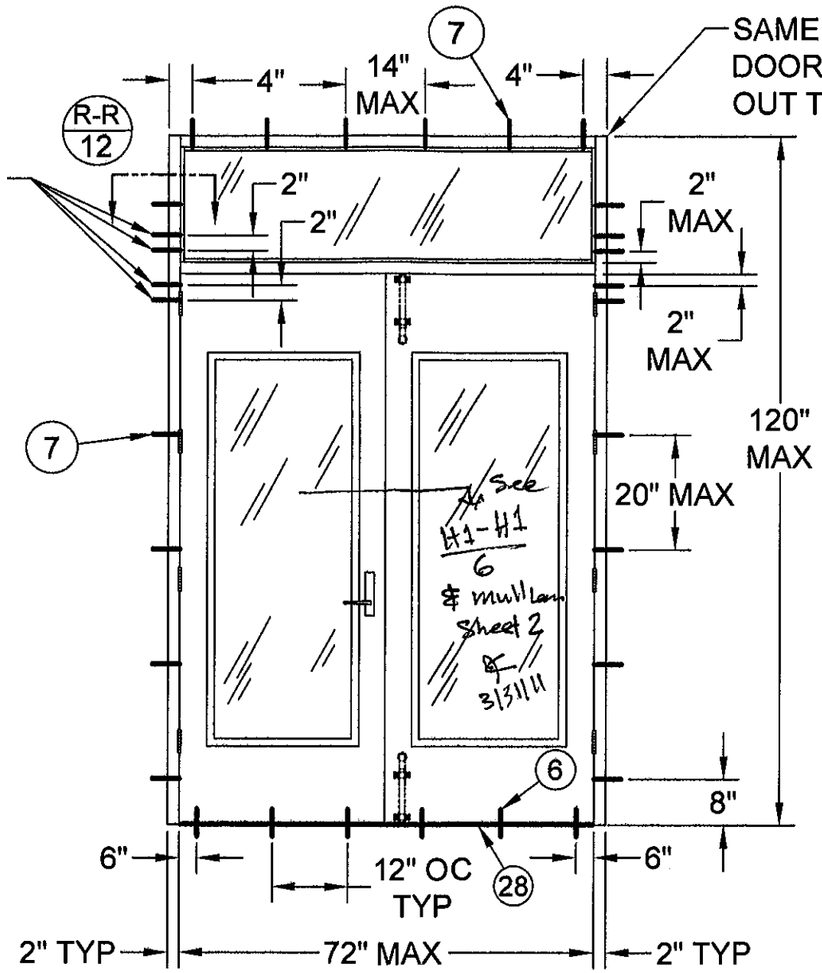

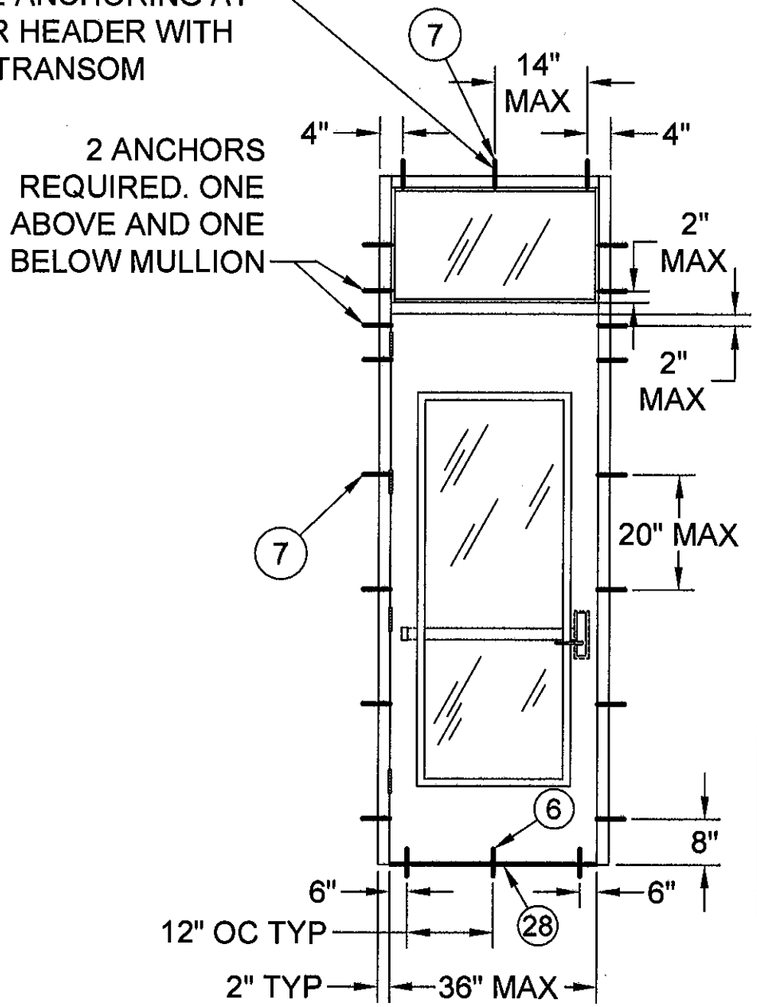

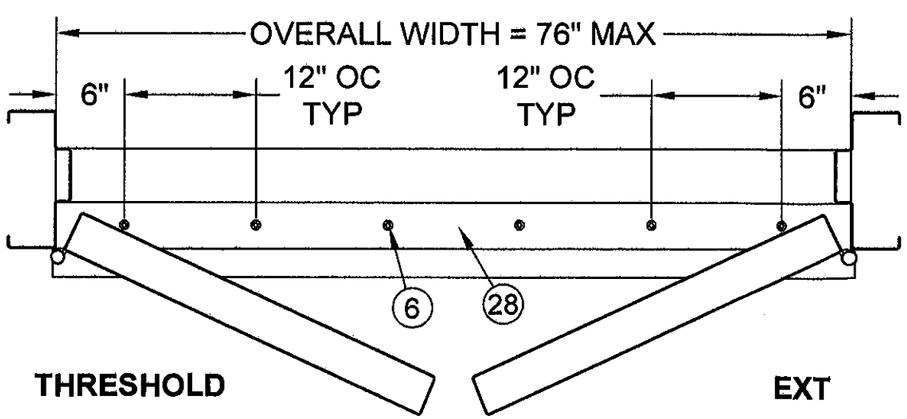

PRODUCT REVISED
as complying with the Florida Building Code
Acceptance No. 09-0709-07
Expiration Date Sept. 16, 2014
By Ishaq I. Chanda
Miami Dade Product Control

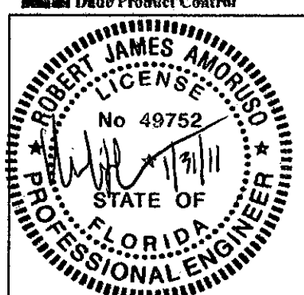

ROBERT J. AMORUSO, PE, FL PE #49752

REV	DATE	DESCRIPTION	DR	CK
A	11-15-10	ADDED SHEET	AWS	NTK

DR: T. CROOKS
CK: NTK
SCAN: -----
TOLERANCE: UNLESS OTHERWISE SPECIFIED
DEC± .031
ANG± .5°
FRAC± 1/32
SH SZ: B
SCALE: NTS

CURRIES
MASON CITY, IOWA

TITLE:
CURRIES MODEL 707 OR 747
16 GA. STEEL OUT-SWING DOORS
WITH OR WITHOUT TRANSOM

SH NO: 12 OF 20
DATE: 01-02-04
DWG.NO. RD0259

PIPE SPACER ANCHORS FOR WOOD (SEE SHEET 12 FOR SPACER DETAILS) - DOUBLE DOORS W/O MULLION (LOCK OPTIONS 1 & 3)

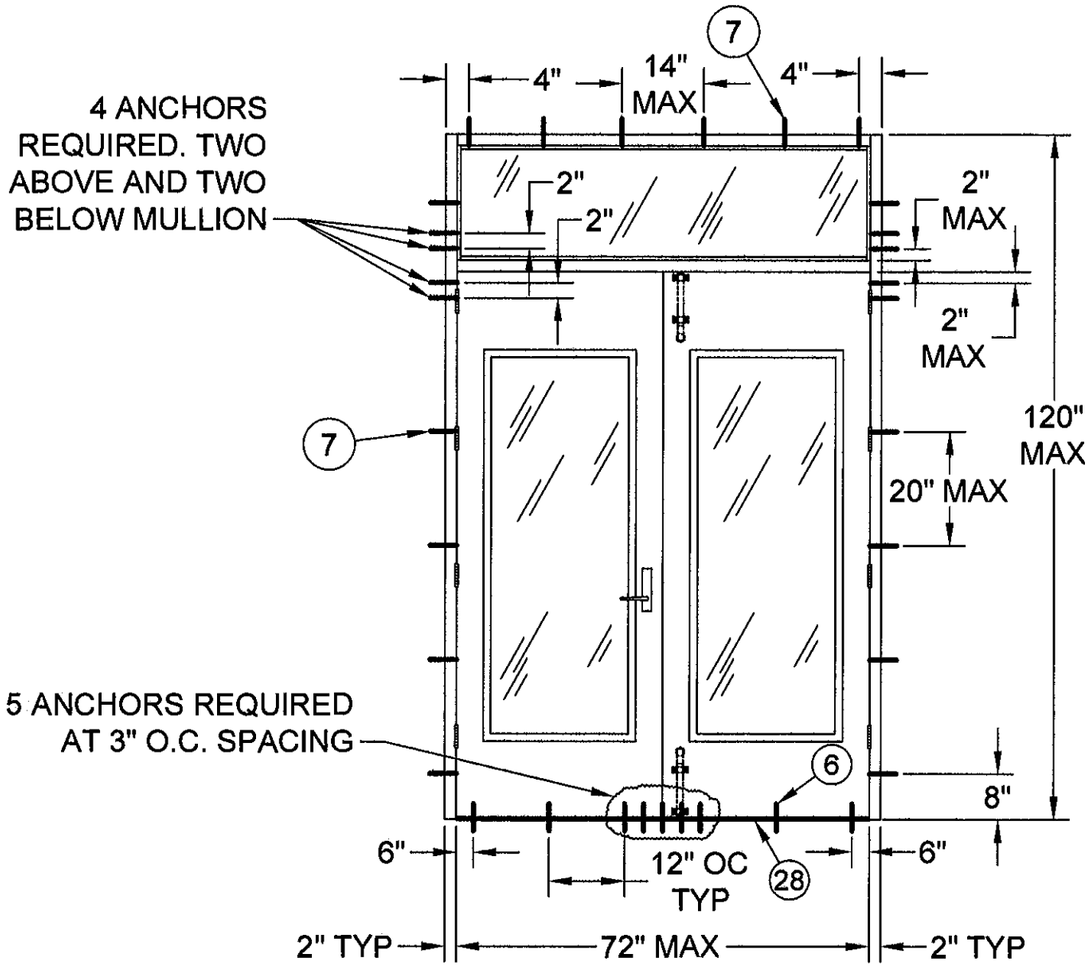

WITH TRANSOM

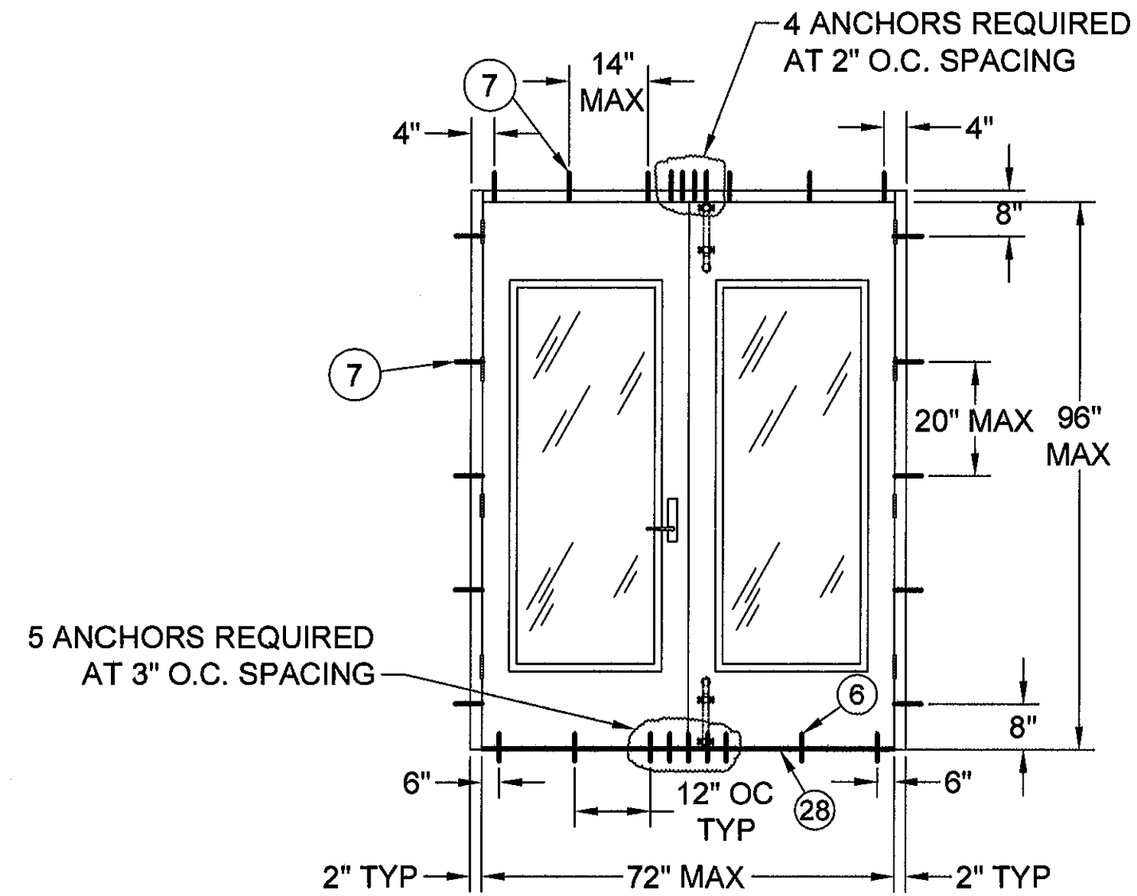

WITHOUT TRANSOM

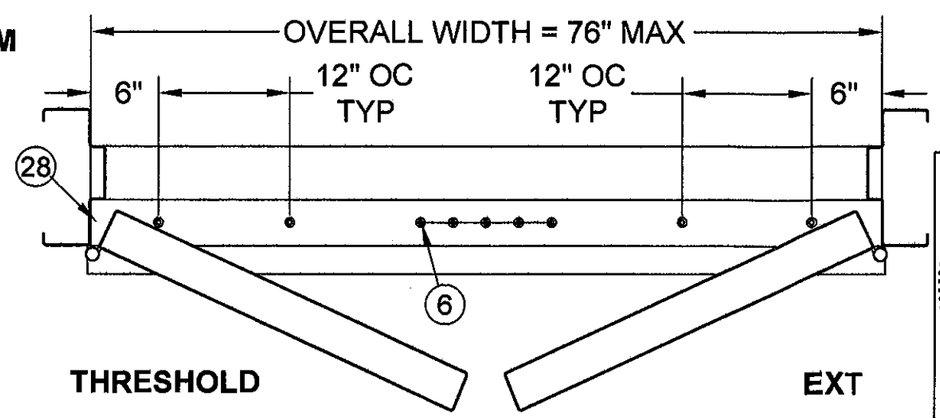

THRESHOLD

EXT

PRODUCT REVISED
as complying with the Florida
Building Code
Acceptance No. 09-0709.07
Expiration Date Sept. 16 2014
By Ishaq I. Chanda
Manager Dade/Product Control

ROBERT JAMES AMORUSO
LICENSE
No 49752
STATE OF FLORIDA
PROFESSIONAL ENGINEER
1/31/11

ROBERT J. AMORUSO, PE, FL PE #49752

A	11-15-10	ADDED SHEET	AWS	NTK
REV	DATE	DESCRIPTION	DR	CK

DR: T. CROOKS
CK: NTK
SCAN: -----
TOLERANCE: UNLESS OTHERWISE SPECIFIED
DEC± .031
ANG± .5°
FRAC± 1/32
SH SZ: B
SCALE: NTS

CURRIES
MASON CITY, IOWA

TITLE:
CURRIES MODEL 707 OR 747
16 GA. STEEL OUT-SWING DOORS
WITH OR WITHOUT TRANSOM

SH NO: 13 OF 20
DATE: 01-02-04
DWG.NO. RD0259

FRAME WELDED TO BUILDING STRUCTURE (CLUSTERED ANCHORS REQ'D AT SILL FOR LOCK OPTIONS 1 & 3 W/O MULLION ONLY)

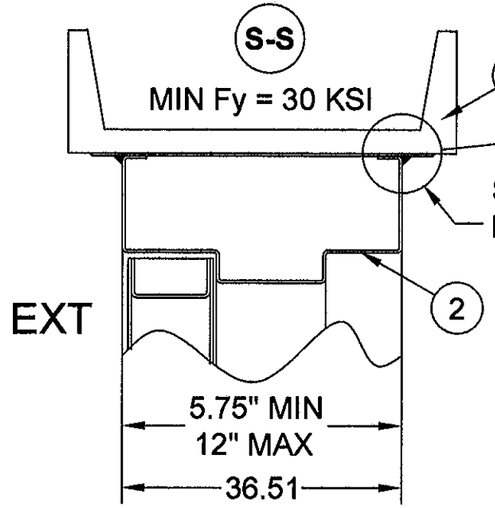

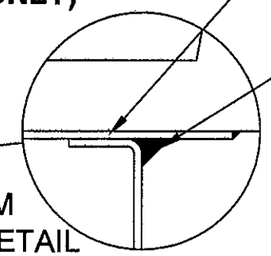

SILL ANCHOR NOTE

5 CLUSTERED ANCHORS 3" O.C. SPACING REQUIRED FOR LOCK OPTIONS 1 AND 3. FOR LOCK OPTION 2, ONLY 2 ANCHORS AT 12" SPACING REQ'D IN LIEU OF 5 CLUSTERED ANCHORS.

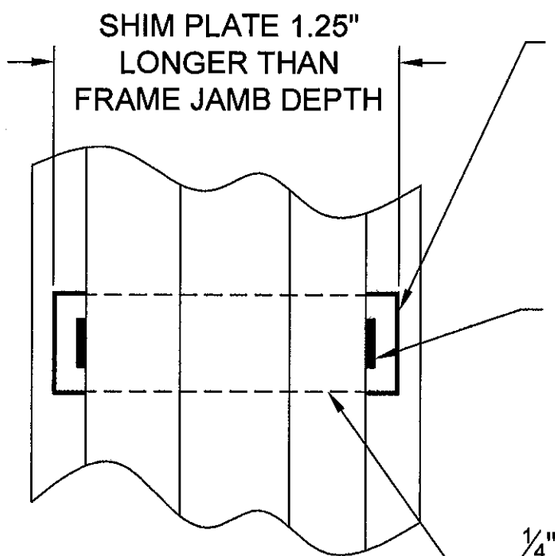

SHIM PLATE DETAIL

HEAD AND JAMBS WELDED TO BUILDING STRUCTURE

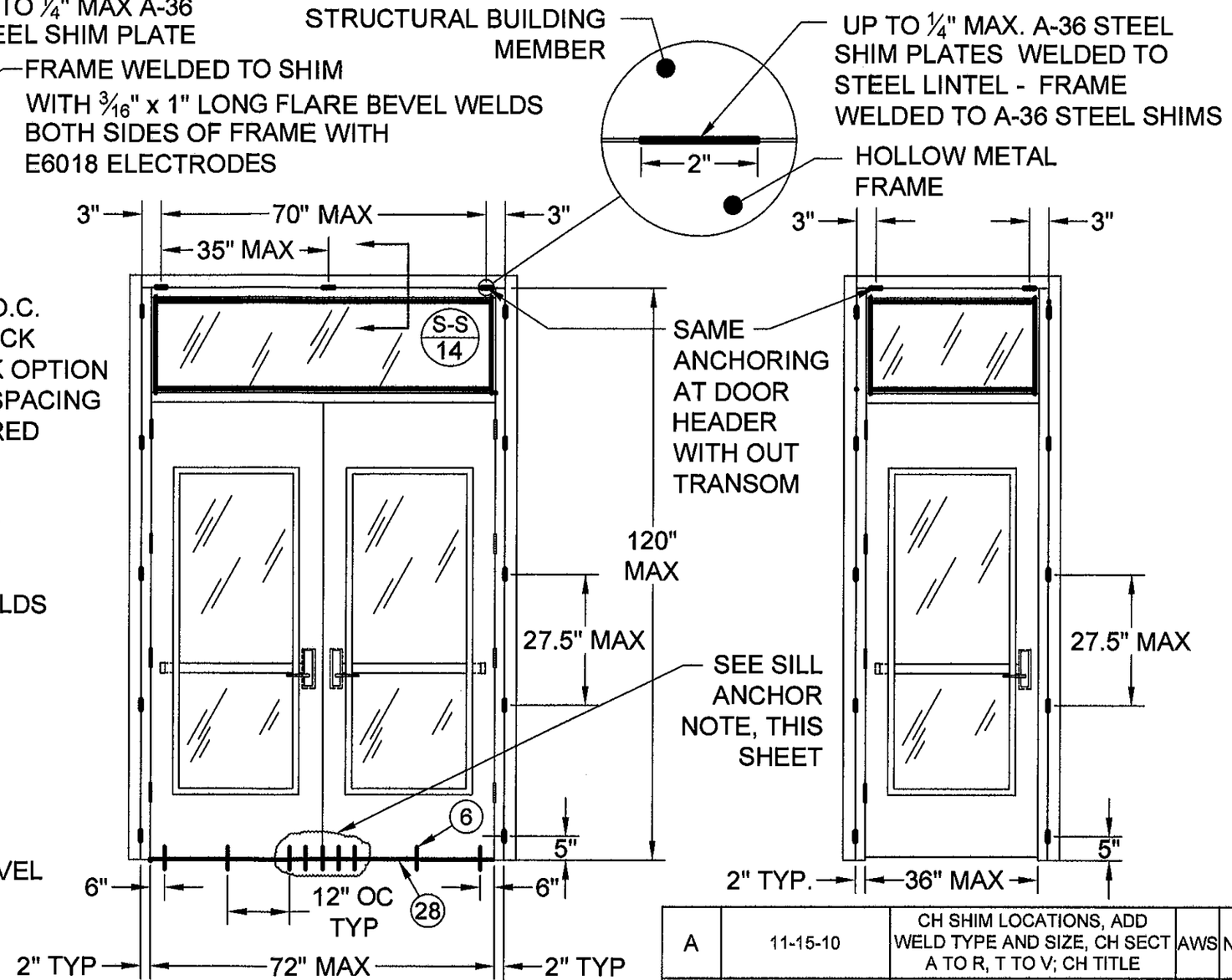

FULL PERIMETER OF FRAME WELDED TO THE BUILDING STRUCTURE

NOTE:

1. ALL WELD DIMENSIONS TO THE ℄ OF SHIMS.
2. APPLY SILICONE OR WATER RESISTANTSEALANT TO PREVENT AIR & WATER INFILTRATION BETWEEN DOOR FRAME AND SUBSTRATE.
3. SEE SHEET 12 AND 13 FOR THRESHOLD ANCHOR DETAILS.

PRODUCT REVISED
as complying with the Florida Building Code
Acceptance No. 04-0709.01
Expiration Date Sept. 16 2009
By Ishaq I. Khan
Miami Dade Product Control

ROBERT JAMES AMORUSO LICENSE No 49752 STATE OF FLORIDA PROFESSIONAL ENGINEER
1/31/11
ROBERT J. AMORUSO, PE, FL PE #49752

REV	DATE	DESCRIPTION	DR	CK
A	11-15-10	CH SHIM LOCATIONS, ADD WELD TYPE AND SIZE, CH SECT A TO R, T TO V; CH TITLE	AWS	NTK

DR: T. CROOKS
CK: NTK
SCAN: -----
TOLERANCE: UNLESS OTHERWISE SPECIFIED
DEC± .031
ANG± .5°
FRAC± 1/32
SH SZ: B
SCALE: NTS

CURRIES
MASON CITY, IOWA

TITLE:
CURRIES MODEL 707 OR 747
16 GA. STEEL OUT-SWING DOORS
WITH OR WITHOUT TRANSOM

SH NO: 14 OF 20
DATE: 01-02-04
DWG.NO. RD0259

DOOR HARDWARE REINFORCEMENTS

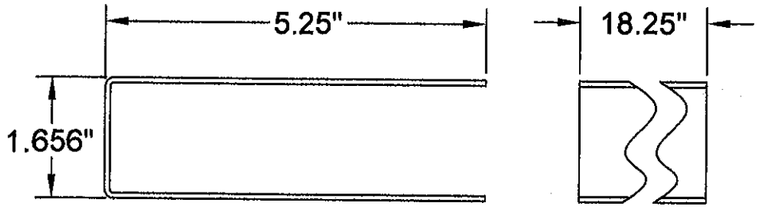

(50) OPTIONAL CLOSER REINFORCEMENT
14 GA. STEEL MIN.

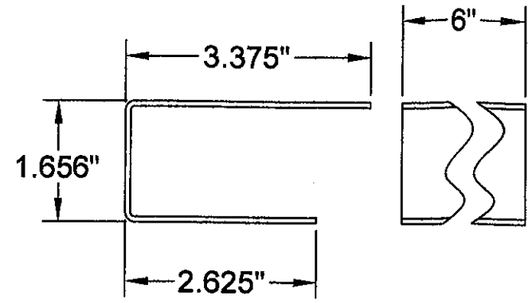

(23) CONCEALED VERTICAL ROD TOP LOCK SIDE REINFORCING
14 GA. STEEL MIN.

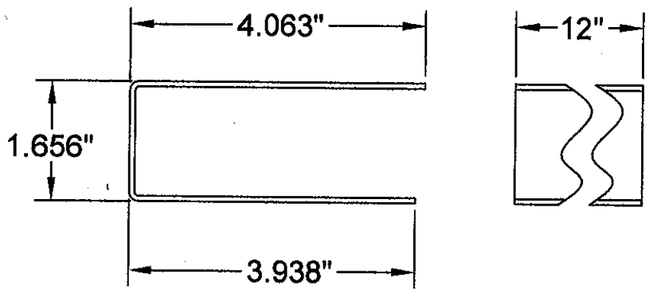

(22) HINGE SIDE EXIT REINFORCING
14 GA. STEEL MIN.

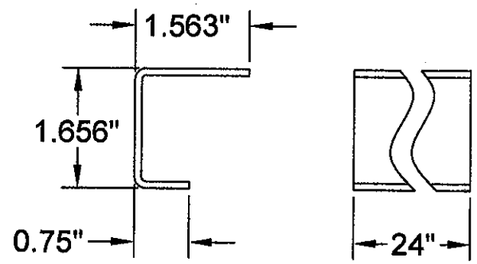

(63) INACTIVE LEAF STRIKE REINFORCING CHANNEL
12 GA. STEEL MIN.

PRODUCT REVISED
as complying with the Florida
Building Code
Acceptance No 09-0709.02
Expiration Date SEP 16, 2014
By Shag J. Chanda
Miami Dade Product Control

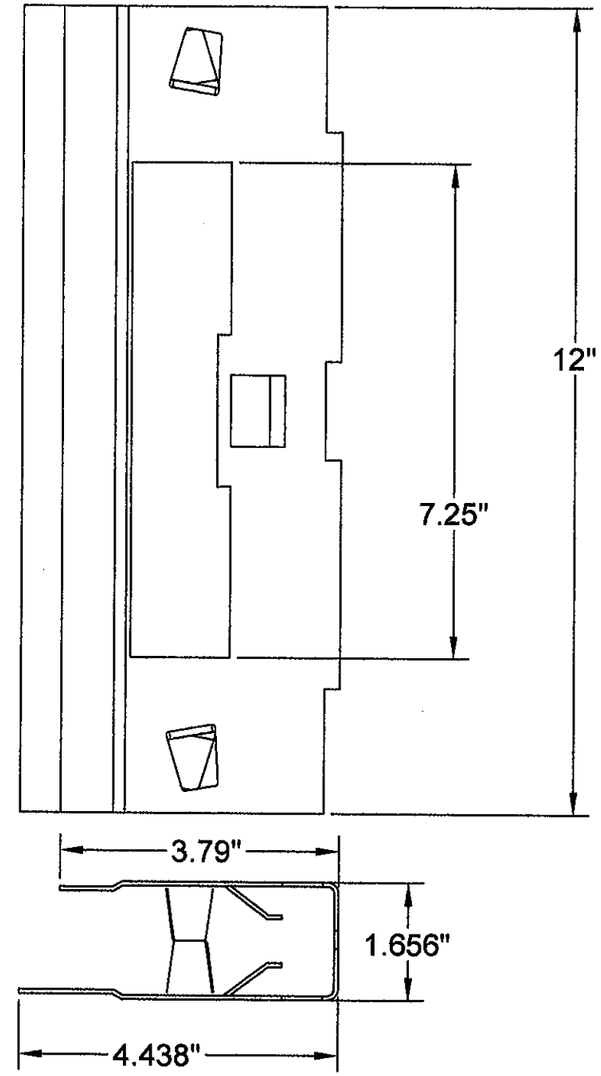

(62) MORTISE LOCK REINFORCING
16 GA. STEEL MIN.

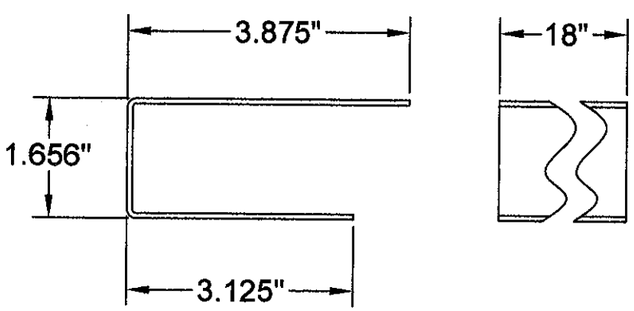

(21) LOCK SIDE EXIT REINFORCING
14 GA. STEEL MIN.

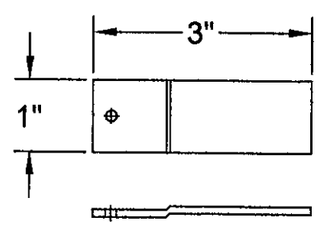

(66) MORTISE LOCK MOUNTING TABS
12 GA. STEEL MIN.

ROBERT JAMES AMORUSO
LICENSE
No 49752
STATE OF FLORIDA
PROFESSIONAL ENGINEER
1/31/11

ROBERT J. AMORUSO, PE, FL PE #49752

REV	DATE	DESCRIPTION	DR	CK
A	11-15-10	UPDATE PER DADE CO. REQ. CH TITLE	AWS	NTK

DR: T. CROOKS
CK: NTK
SCAN: -----
TOLERANCE: UNLESS OTHERWISE SPECIFIED
DEC± .031
ANG± .5°
FRAC± 1/32
SH SZ: B
SCALE: NTS

CURRIES
MASON CITY, IOWA

TITLE:
CURRIES MODEL 707 OR 747
16 GA. STEEL OUT-SWING DOORS
WITH OR WITHOUT TRANSOM

SH NO: 15 OF 20
DATE: 01-02-04
DWG.NO. RD0259

PTC, LLC PO BOX 520775, LONGWOOD, FL 375252-0775, FBPE Certification of Authorization No. 25935

DOOR PARTS

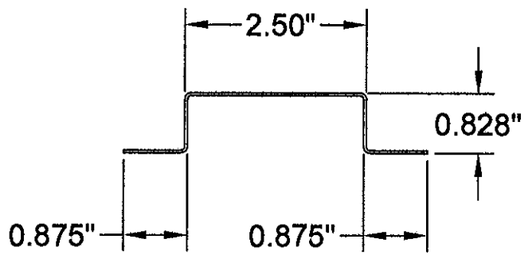

(15) VERTICAL STIFFENER FOR CURRIES MODEL 747 20 GA. STEEL MIN.

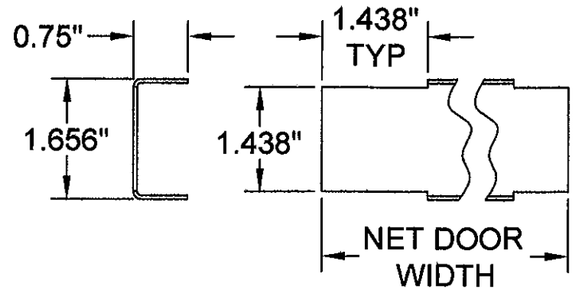

NOTCHED EACH END TO CLEAR HINGE AND LOCK CHANNEL

(9) OR (10) TOP OR BOTTOM END CHANNEL 12 GA. STEEL MIN.

HINGE PREPARATION ASSEMBLY

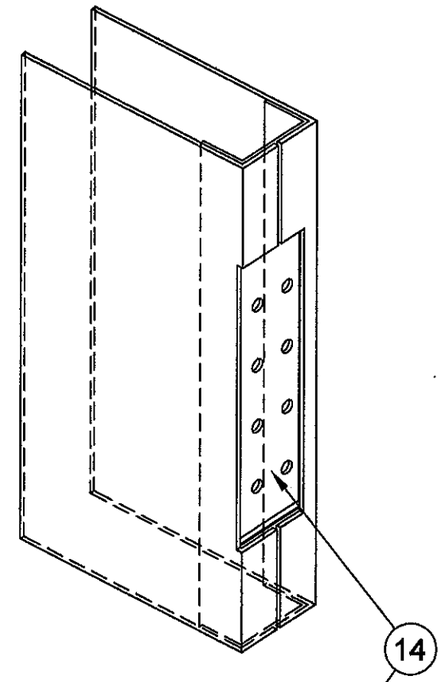

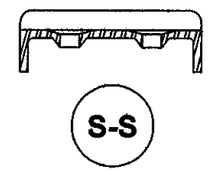

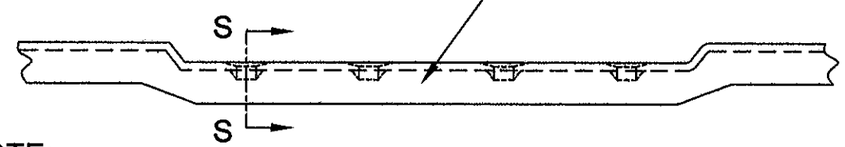

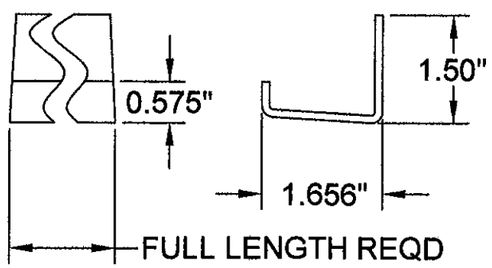

(13) DOOR LOCK CHANNEL 12 GA. STEEL MIN

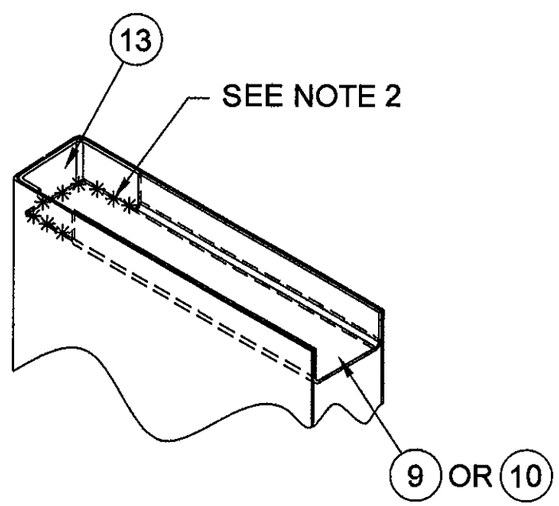

END CHANNEL ASSEMBLY

NOTE:
1.) FLUSH TOP OR BOTTOM CAP MAY BE USED, NOT REQUIRED.
2.) TOP AND BOTTOM END CHANNELS ARE WELDED TO LOCK AND HINGE CHANNELS AT FACTORY.

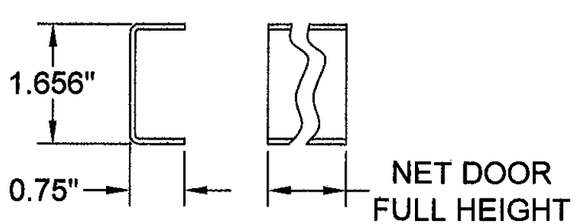

(14) DOOR HINGE CHANNEL 14 GA. STEEL MIN.

PRODUCT REVISED as complying with the Florida Building Code Acceptance No. 04-0709.07 Expiration Date Sept. 16 2014 By Ishaq I. Chanda Miami Dade Product Control

ROBERT JAMES AMORUSO LICENSE No 49752 STATE OF FLORIDA PROFESSIONAL ENGINEER 11/31/11

ROBERT J. AMORUSO, PE, FL PE #49752

REV	DATE	DESCRIPTION	DR	CK
A	11-15-10	UPDATE PER DADE CO. REQ. CH TITLE, CH DET U TO W	AWS	NTK

DR: T. CROOKS
CK: NTK
SCAN: -----
TOLERANCE: UNLESS OTHERWISE SPECIFIED
DEC± .031
ANG± .5°
FRAC± 1/32
SH SZ: B
SCALE: NTS

CURRIES
MASON CITY, IOWA

TITLE: CURRIES MODEL 707 OR 747 16 GA. STEEL OUT-SWING DOORS WITH OR WITHOUT TRANSOM

SH NO: 16 OF 20
DATE: 01-02-04
DWG.NO. RD0259

FRAME AND MULLION PARTS

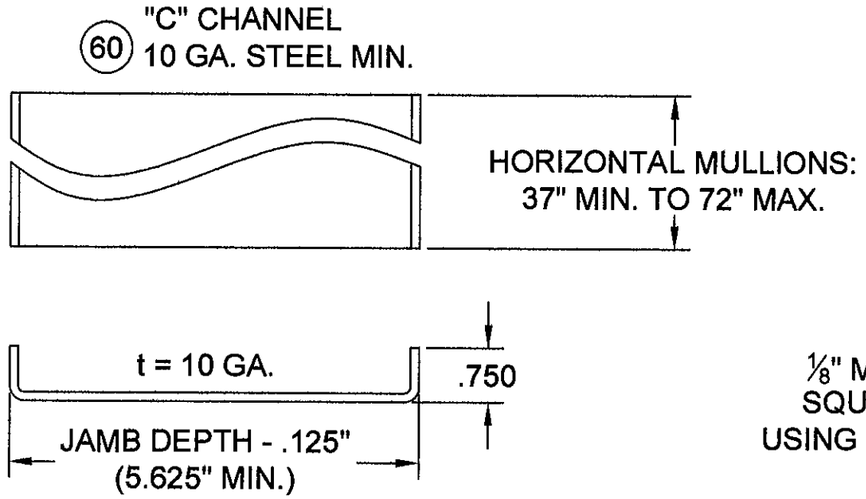

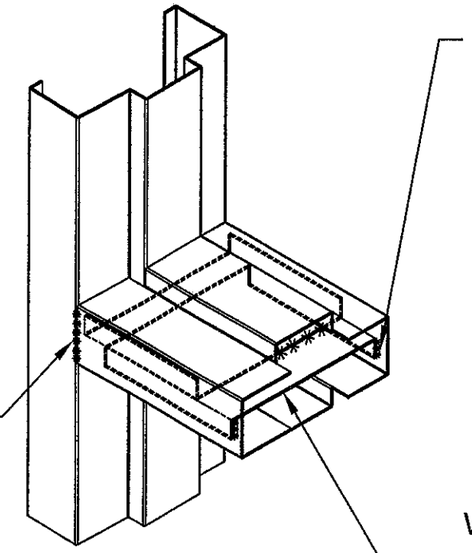

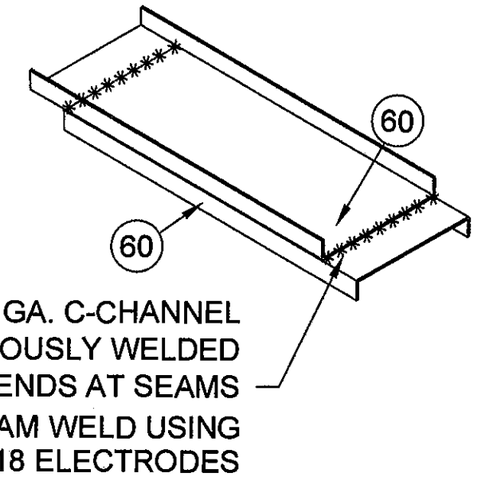

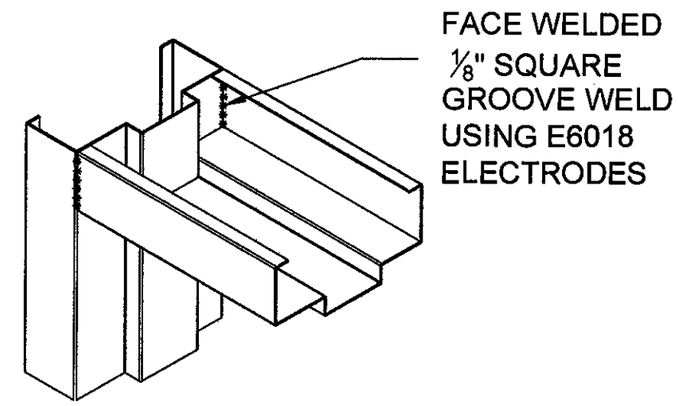

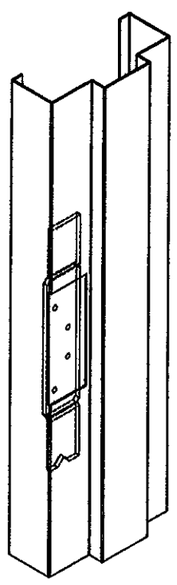

STANDARD HINGE REINFORCEMENT
7 GA. STEEL MIN.

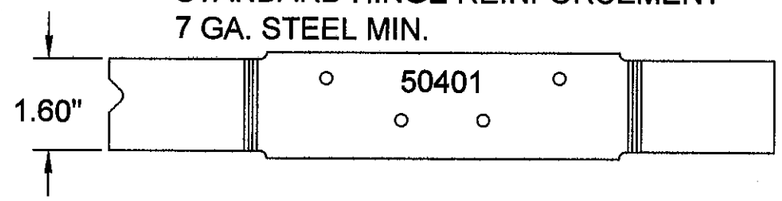

3 ULTIMA HINGE REINFORCEMENT
7 GA. STEEL MIN.

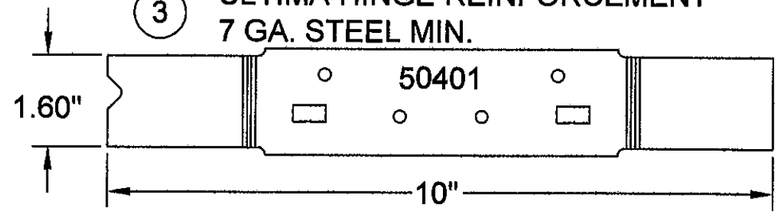

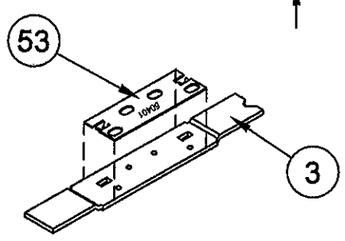

53 SHIM PLATE

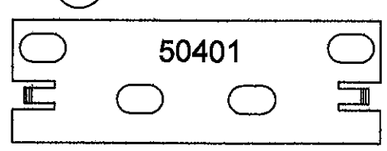

NOTES:
1.) (2)-10 GA "C" CHANNEL (ITEM 60) REQUIRED
IN MULLIONS GREATER THAN 36" LONG

PRODUCT REVISED
as complying with the Florida
Building Code
Assignment No. 09-0709.07
Expiration Date Sept. 16 2014
By Ishaq I. Chaus
Miami Dade Product Control

ROBERT JAMES AMORUSO
LICENSE
No 49752
STATE OF
FLORIDA
PROFESSIONAL ENGINEER
1/3/11
ROBERT J. AMORUSO, PE, FL PE #49752

REV	DATE	DESCRIPTION	DR	CK
A	11-15-10	UPDATE PER DADE CO. REQ. CH TITLE	AWS	NTK

DR: T. CROOKS
CK: NTK
SCAN: ------
TOLERANCE: UNLESS OTHERWISE SPECIFIED
DEC± .031
ANG± .5°
FRAC± 1/32
SH SZ: B
SCALE: NTS

CURRIES
MASON CITY, IOWA

TITLE:
CURRIES MODEL 707 OR 747
16 GA. STEEL OUT-SWING DOORS
WITH OR WITHOUT TRANSOM

SH NO: 17 OF 20
DATE: 01-02-04
DWG.NO. RD0259

FRAME HARDWARE REINFORCEMENT - SINGLE DOORS

FRAME RIM EXIT REINFORCEMENT

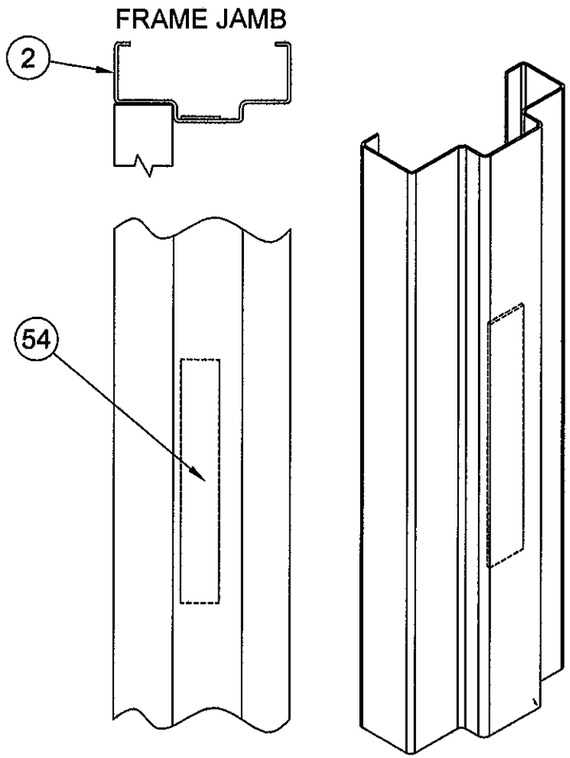

(54) FRAME RIM EXIT REINFORCEMENT
FOR SINGLE DOORS
12 GA. STEEL MIN.

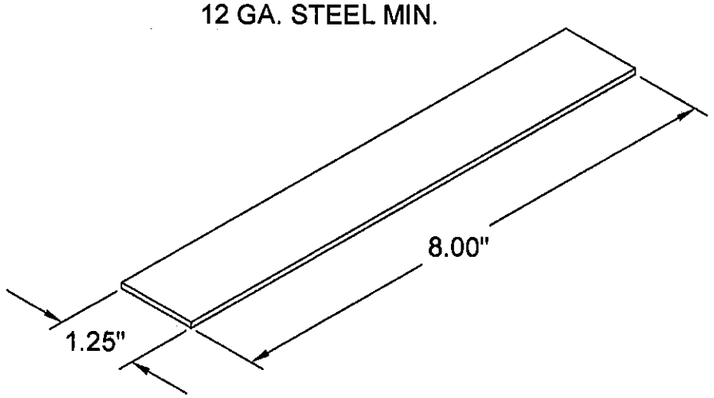

MORTISE LOCK REINFORCING

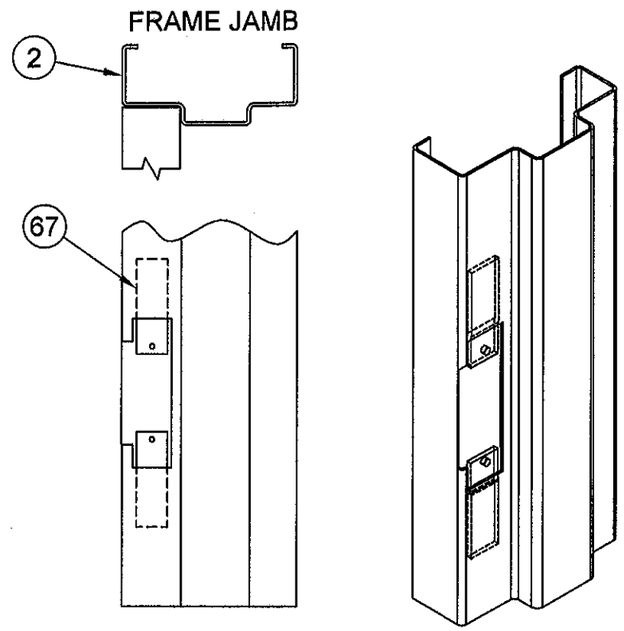

(67) MORTISE LOCK STRIKE REINFORCEMENT
12 GA. STEEL MIN.

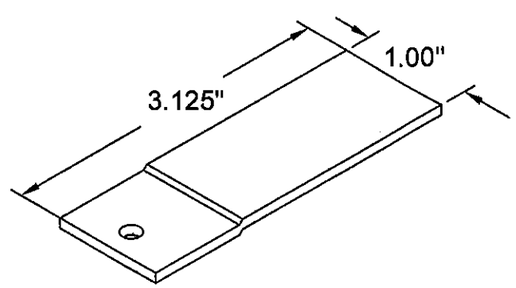

CONCEALED VERTICAL ROD REINFORCING

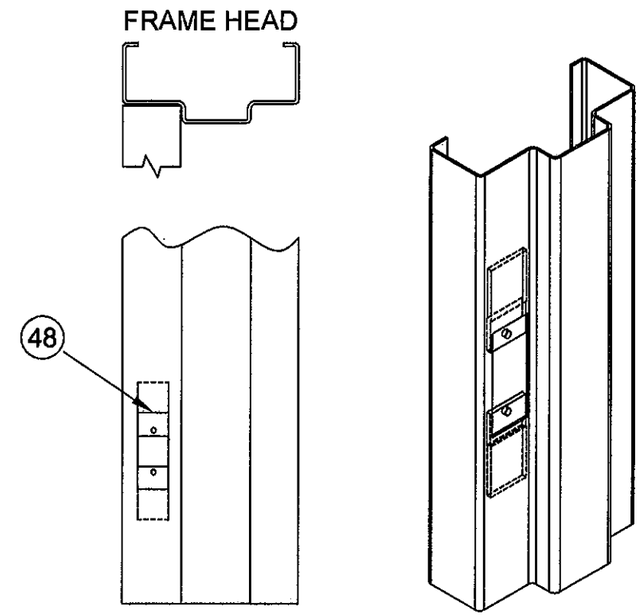

(48) CONCEALED VERTICAL ROD (CVR)
STRIKE REINFORCEMENT
12 GA. STEEL MIN.

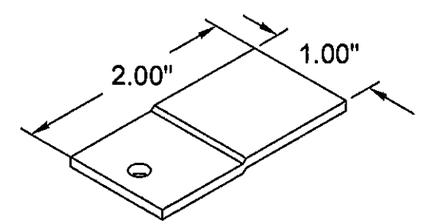

PRODUCT REVISED
In compliance with the Florida Building Code
Application No. 09-0709.07
Expiration Date Sept. 16 2014
By Ishay I. Levy
Miami Dade Product Control

ROBERT JAMES AMORUSO
LICENSE
No 49752
STATE OF FLORIDA
PROFESSIONAL ENGINEER
9/21/11

ROBERT J. AMORUSO, PE, FL PE #49752

REV	DATE	DESCRIPTION	DR	CK
A	11-15-10	UPDATE PER DADE CO. REQ. CH TITLE	AWS	NTK

DR: T. CROOKS
CK: NTK
SCAN: -----
TOLERANCE: UNLESS OTHERWISE SPECIFIED
DEC± .031
ANG± .5°
FRAC± 1/32
SH SZ: B
SCALE: NTS

CURRIES
MASON CITY, IOWA

TITLE:
CURRIES MODEL 707 OR 747
16 GA. STEEL OUT-SWING DOORS
WITH OR WITHOUT TRANSOM

SH NO: 18 OF 20
DATE: 01-02-04
DWG.NO. RD0259

FRAME HARDWARE REINFORCEMENT - PAIRS OF DOORS

RIM EXIT REINFORCING

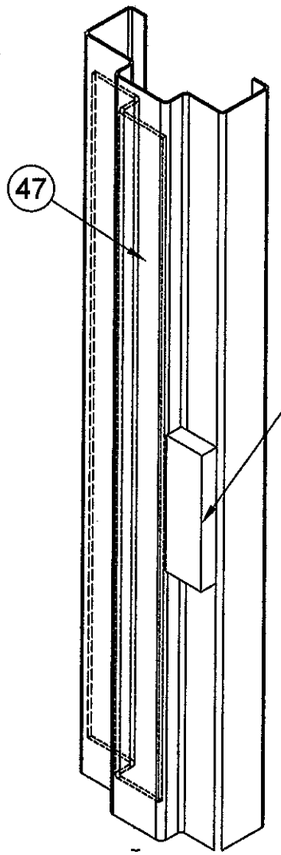

FRAME HEAD

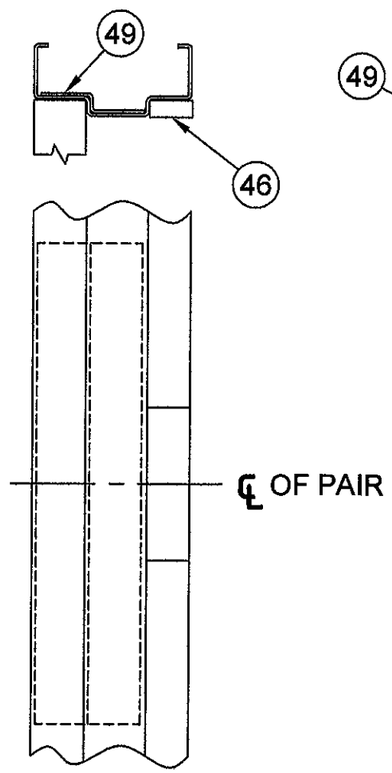

SURFACE BOLT REINFORCING

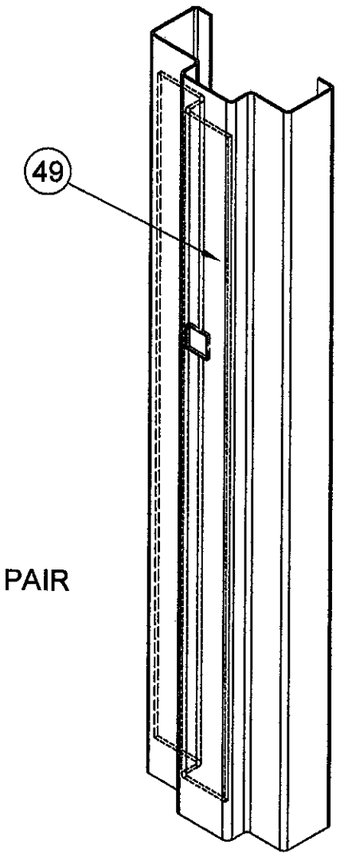

FRAME HEAD

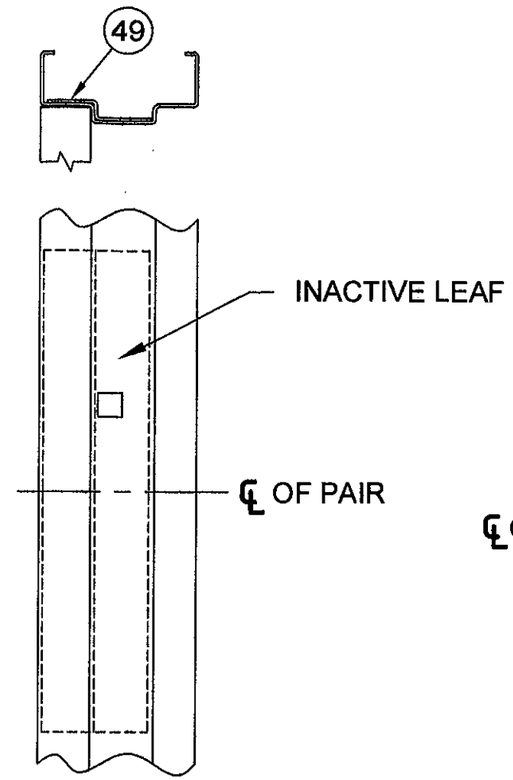

CONCEALED VERTICAL ROD REINFORCING

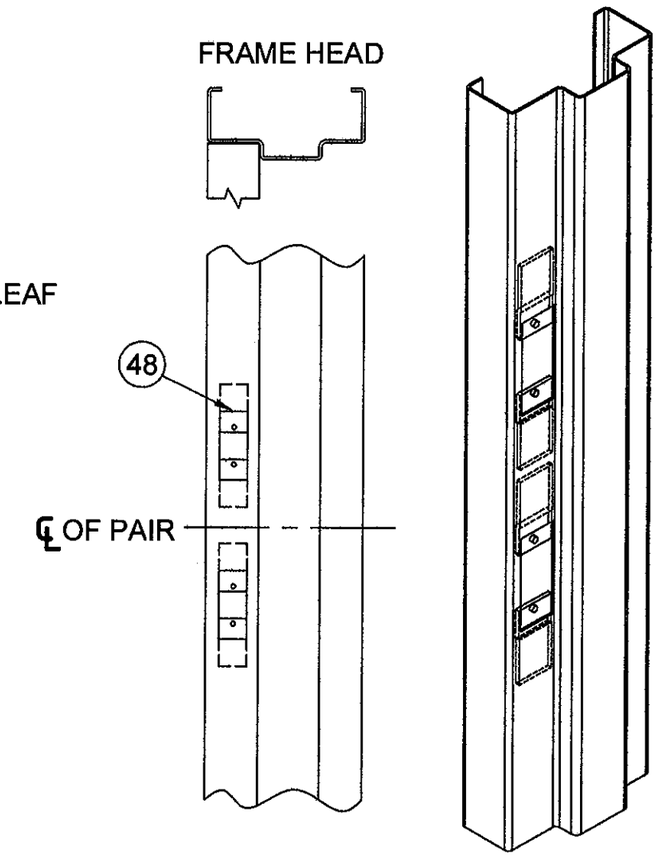

(46) FRAME HEAD REINFORCEMENT
FOR PAIRS OF DOORS WITH RIM EXITS

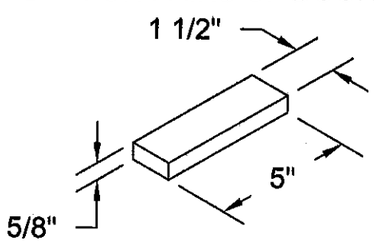

(47) FRAME HEAD REINFORCEMENT
12 GA. STEEL MIN.

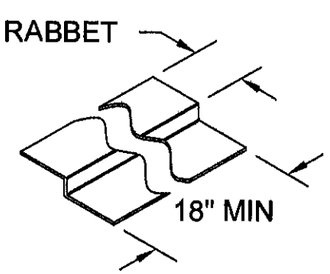

(49) FRAME HEAD REINFORCEMENT
12 GA. STEEL MIN.

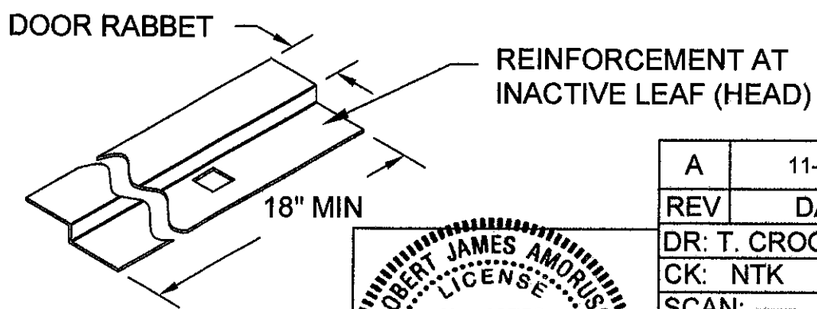

PRODUCT REVISED
as complying with the Florida
Building Code
Acceptance No. 09-0709.01
Expiration Date Sept. 16, 2014
By Ishaq I. Chanda
Miami Dade Product Control

ROBERT JAMES AMORUSO
LICENSE
No 49752
STATE OF
FLORIDA
PROFESSIONAL ENGINEER
ROBERT J. AMORUSO, PE, FL PE #49752

A	11-15-10	UPDATE PER DADE CO. REQ. CH TITLE	AWS	NTK
REV	DATE	DESCRIPTION	DR	CK

DR: T. CROOKS
CK: NTK
SCAN: -----
TOLERANCE: UNLESS OTHERWISE SPECIFIED
DEC± .031
ANG± .5°
FRAC± 1/32
SH SZ: B
SCALE: NTS

CURRIES
MASON CITY, IOWA

TITLE:
CURRIES MODEL 707 OR 747
16 GA. STEEL OUT-SWING DOORS
WITH OR WITHOUT TRANSOM

SH NO: 19 OF 20
DATE: 01-02-04
DWG.NO. RD0259

BILL OF MATERIALS

ITEM	QUANTITY	DESCRIPTION
1	---------	SKIN MATERIAL 16 GA. (0.054") MIN. , 14 GA. (0.068") MAX. GLAZED OR FLUSH 707,707CURRIESTAIN, OR 747 DOOR OR TRANSOM PANEL. (COLD ROLLED, GALVANIZED OR GALVANNEALED) (STAINLESS STEEL - MODEL 707 ONLY)
2	---------	FRAME MATERIAL 16 GA. (0.053") MIN. , 12 GA. (0.094") MAX WELDED FRAME (COLD ROLLED, GALVANIZED, GALVANNEALED OR STAINLESS STEEL) JAMB DEPTH 5-3/4" MIN, 12" MAX
3	AS INDICATED	7 GA. (0.177") MIN. FRAME HINGE REINFORCEMENT-SEE SHEET 1
4	AS INDICATED	16 GA. (0.053") MIN. , PIPE SPACER ANCHOR-SEE SHEET 11 FOR INSTALLATION
5	AS INDICATED	14 GA. (0.073") MASONRY T ANCHOR-SEE SHEET 10 FOR INSTALLATION
6	AS INDICATED	1/4" ITW 1-1/2" ADVANCED THREADFORM TECHNOLOGY TAPCON W/ 1 3/4" EMBEDMENT & 1-1/2" EDGE DISTANCE INTO SILL ONLY
7	AS INDICATED	3/8" FLAT HEAD WOOD SCREW/LAG BOLT SEE SHEET 11 FOR INSTALLATION THROUGH PIPE SLEEVE.
8	AS INDICATED	3/8" FLAT HEAD EXPANSION SHELL ANCHOR BOLT (ITW DYNABOLT) SEE SHEET 11 FOR INSTALLATION THROUGH PIPE SLEEVE.
9	1	12 GA. (0.094") MIN., TOP END CHANNEL
10	1	12 GA. (0.094") MIN., BOTTOM END CHANNEL
13	1	12 GA. (0.094") MIN DOOR LOCK CHANNEL
14	1	14 GA. (0.068") MIN DOOR HINGE CHANNEL
15	---------	20 GA. (0.035") MIN VERTICAL STIFFENER FOR MODEL 747 DOOR
16	1	1 POUND/CUBIC FOOT NOMINAL DENSITY POLYSTYRENE BY INSULFOAM
17	1	SARGENT MD8600 CONCEALED VERTICAL ROD EXIT DEVICE PER DOOR LEAF
19	1	SARGENT HC 8800 SERIES RIM EXIT DEVICE PER DOOR LEAF WITH TWO SHIM KITS (FOR PAIRS OF DOORS USE ITEM 42)
20	1	CORBIN RUSSWIN ML2500 SERIES MORTISE LOCK WITH LATCH BOLT AND DEAD BOLT
21	1	14 GA. (0.068") MIN. LOCK SIDE EXIT REINFORCING
22	1	14 GA. (0.068") MIN. HINGE SIDE EXIT REINFORCING
23	1	14 GA. (0.068") MIN. CONCEALED VERTICAL ROD TOP LOCK SIDE REINFORCING
24	1	8" CMU BLOCK FILLED WITH 2500 PSI MORTAR
25	1	STEEL LINTEL OR STRUCTURAL STEEL BUILDING MEMBER. MIN Fy= 36 KSI
26	4	4-1/2" X 4-1/2" X 0.134" OR 0 .180" ; 5" X 5" X 0.146" OR 0.190" STEEL HINGES-McKINNEY T-2714
27	1	ROW OF PEMKO S88 WEATHER-STRIP AROUND DOORS ON FRAME JAMB AND HEAD
28	1	PEMKO ALUMINUM THRESHOLD 2005AS 1/2" TALL X 5" X NOMINAL DOOR OPENING WIDTH
29	1	(2) 2 X WOOD BUCK
30	1	POURED CONCRETE 2500 PSI (MIN)
31	1	NATIONAL GUARD 5050 BULB WEATHER-STRIP AROUND DOORS ON FRAME JAMB AND HEAD
32	1	PEMKO 303 WEATHER-STRIP PER DOOR LEAF AT MEETING EDGE OF PAIRS OF DOORS; NOT REQD FOR SINGLE DOORS
33	AS REQUIRED	1/8 X 1/2 X PERIMETER OF VISION LIGHT KIT CLOSED CELL FOAM TAPE
34	---------	FINISH PAINT-FACES OF DOOR AND FRAME
35	AS INDICATED	#6 X 1-1/4" OVAL HEAD TEK SCREW-SEE TABLE ON SHEET 7 FOR QUANTITY

DOOR SKIN/ FRAME MINIMUM YIELD STRENGTH: 30,490 PSI
MINIMUM TENSILE STRENGTH: 48,580 PSI

ITEM	QUANTITY	DESCRIPTION
37	2	988, 988Y, OR 988CR SURFACE BOLTS (ON INACTIVE LEAF)
38	---------	GLASSLAM LAMINATED GLASS ASSEMBLY
39	---------	18 GA (0.053) MIN FRAME GLASS STOP AROUND PERIMETER OF GLASSLAM IN FRAMING
40	---------	18 GA. (0.043") MIN. OPTIONAL TYPE 2 VISION LIGHT KIT.
41	4	14 GA. (0.068") MIN. PIECES SURROUND CHANNEL PER VISION LIGHT
42	1	SARGENT HC 980 HARDWARE MULLION FOR PAIRS OF DOORS USE WITH ITEM 19 fy=39,000 psi
44	1	NATIONAL GUARD 160 S WEATHER-STRIP AT MEETING EDGE OF PAIRS OF DOORS; NOT REQD FOR SINGLE DOORS
45	1	12 GA. (0.094) FRAME REINFORCEMENT FOR SURFACE BOLTS
46	1	5/8" FRAME REINFORCEMENT (FOR PAIRS OF DOORS WITH HC980 HARDWARE MULLION)
47	1	12 GA. (0.094") FRAME REINFORCEMENT (FOR PAIRS OF DOORS WITH RIM EXITS AND HC980 HARDWARE MULLION.)
48	2	12 GA. (0.094") CONCEALED VERTICAL ROD STRIKE REINFORCEMENT PER EXIT DEVICE
49	1	12 GA (0.094") FRAME REINFORCEMENT FOR PAIRS OF DOORS REQUIRING SURFACE BOLTS ON INACTIVE LEAF (LOCK OPTION 3. SEE SHEET 2.)
50	---------	14 GA. (0.068") OPTIONAL CLOSER REINFORCING
51	2	7 GA. (0.177") BOTTOM CONCEALED VERTICAL ROD EXIT REINFORCING PER DOOR
52	1	7 GA. (0.177") ULTIMA HINGE REINFORCING PER HINGE LOCATION
53	1	18 GA (0.043") MIN ULTIMA HINGE SHIM PER HINGE LOCATION FOR HINGES 0.134" THICK.
54	1	12 GA. (0.094") RIM EXIT REINFORCEMENT
59	---------	#8 X 1-1/2" OVAL HEAD TEK SCREW-SEE SHEET 8
60	1	(2) 10 GA. (0.120") MIN "C" CHANNEL PER HORIZONTAL FRAME MULLION LONGER THAN 3'
61	1	NATIONAL GUARD 896 ALUMINUM THRESHOLD 1/2" X NOMINAL DOOR OPENING WIDTH
62	1	16 GA (0.053") MORTISE LOCK REINFORCING
63	1	12 GA (0.094") INACTIVE LEAF CHANNELED STRIKE REINFORCING
64	1	14 GA (0.068") MIN SURFACE BOLT REINFORCING
65	1	12 GA (0.094") INACTIVE LEAF FLAT PLATE STRIKE REINFORCING
66	2	12 GA (0.094") MORTISE LOCK MOUNTING TABS
67	2	12 GA (0.094") MORTISE LOCK STRIKE TABS

PRODUCT REVISED
in complying with the Florida Building Code
Accepted: 09-0709.07
Expiration Date: Sept. 16, 2014
By: Miami Dade Product Control

ROBERT JAMES AMORUSO
LICENSE
No 49752
STATE OF FLORIDA
PROFESSIONAL ENGINEER
1/31/11
ROBERT J. AMORUSO, PE, FL PE #49752

REV	DATE	DESCRIPTION	DR	CK
A	11-15-10	UPDATE PER DADE CO. REQ. CH TITLE	AWS	NTK

DR: T. CROOKS
CK: NTK
SCAN: -----
TOLERANCE: UNLESS OTHERWISE SPECIFIED
DEC± .031
ANG± .5°
FRAC± 1/32
SH SZ: B
SCALE: NTS

CURRIES
MASON CITY, IOWA

TITLE:
CURRIES MODEL 707 OR 747
16 GA. STEEL OUT-SWING DOORS
WITH OR WITHOUT TRANSOM

SH NO: 20 OF 20
DATE: 01-02-04
DWG.NO. RD0259

PTC, LLC PO BOX 520775, LONGWOOD, FL 375252-0775, FBPE Certification of Authorization No. 25935