MIAMI-DADE COUNTY

BUILDING CODE COMPLIANCE OFFICE (BCCO)
PRODUCT CONTROL DIVISION

MIAMI-DADE COUNTY, FLORIDA
METRO-DADE FLAGLER BUILDING
140 WEST FLAGLER STREET, SUITE 1603
MIAMI, FLORIDA 33130-1563
(305) 375-2901 FAX (305) 375-2908
www.buildingcodeonline.com

NOTICE OF ACCEPTANCE (NOA)

Lawson Industries, Inc.
8501 N. W. 90th Street
Medley, FL 33166

SCOPE:
This NOA is being issued under the applicable rules and regulations governing the use of construction materials. The documentation submitted has been reviewed by Miami-Dade County Product Control Division and accepted by the Board of Rules and Appeals (BORA) to be used in Miami Dade County and other areas where allowed by the Authority Having Jurisdiction (AHJ).

This NOA shall not be valid after the expiration date stated below. The Miami-Dade County Product Control Division (In Miami Dade County) and/or the AHJ (in areas other than Miami Dade County) reserve the right to have this product or material tested for quality assurance purposes. If this product or material fails to perform in the accepted manner, the manufacturer will incur the expense of such testing and the AHJ may immediately revoke, modify, or suspend the use of such product or material within their jurisdiction. BORA reserves the right to revoke this acceptance, if it is determined by Miami-Dade County Product Control Division that this product or material fails to meet the requirements of the applicable building code.

This product is approved as described herein, and has been designed to comply with the High Velocity Hurricane Zone of the Florida Building Code.

DESCRIPTION: Series "7600" Aluminum Single Hung Window (Fin Mounted)-Non Impact

APPROVAL DOCUMENT: Drawing No. **L-7600-0402**, titled "SH-7600 Single Hung Fin Window", sheets 1 through 5 of 5, prepared by the manufacturer, dated 09/20/04 and last revised on July 7, 2009, signed and sealed by Thomas J. Sotos, P.E., bearing the Miami-Dade County Product Control Revision stamp with the Notice of Acceptance number and expiration date by the Miami-Dade County Product Control Division.

MISSILE IMPACT RATING: None: Approved Hurricane Protection Devices Complying w/ FBC , as applicable, are required

LABELING: Each unit shall bear a permanent label with the manufacturer's name or logo, city, state and following statement: "Miami-Dade County Product Control Approved", unless otherwise noted herein.

RENEWAL of this NOA shall be considered after a renewal application has been filed and there has been no change in the applicable building code negatively affecting the performance of this product.

TERMINATION of this NOA will occur after the expiration date or if there has been a revision or change in the materials, use, and/or manufacture of the product or process. Misuse of this NOA as an endorsement of any product, for sales, advertising or any other purposes shall automatically terminate this NOA. Failure to comply with any section of this NOA shall be cause for termination and removal of NOA.

ADVERTISEMENT: The NOA number preceded by the words Miami-Dade County, Florida, and followed by the expiration date may be displayed in advertising literature. If any portion of the NOA is displayed, then it shall be done in its entirety.

INSPECTION: A copy of this entire NOA shall be provided to the user by the manufacturer or its distributors and shall be available for inspection at the job site at the request of the Building Official.
This NOA **revises** NOA # **07-1029.05** consists of this page 1 as well as approval document mentioned above.
The submitted documentation was reviewed by **Fitz A. Harris, P.E.**

Fitz A. Harris

MIAMI-DADE COUNTY APPROVED

NOA No 09-0720.06
Expiration Date: July 07, 2010
Approval Date: October 28 2009

NOTICE OF ACCEPTANCE: EVIDENCE SUBMITTED

A. DRAWINGS (transferred from file # **07-0817.16**)

1. Manufacturer's die drawings and sections.
2. Drawing No. **L-7600-0402**, titled "SH-7600 Single Hung Fin Window", sheets 1 through 5 of 5, prepared by the manufacturer, dated 09/20/04 and last revised on July 7, 2009, signed and sealed by Thomas J. Sotos, P.E.

B. TESTS

1. Test reports on 1) Air Infiltration Test, per FBC, TAS 202-94
   2) Uniform Static Air Pressure Test, per FBC, TAS 202-94
   3) Water Resistance Test, per FBC, TAS 202-94
   4) Forced Entry Test, per FBC 2411 3.2.1 and TAS 202-94

Along with marked-up drawings and installation diagram of aluminum Single Hung Window-Fin mounted, prepared by Fenestration testing Laboratories Inc., Test Reports No. **FTL 5284 (07080),** issued on 09-14-07, signed & sealed by Michael Wenzel, P. E.
Note: this test report has been revised & reissued on 07/21/08 by Fenestration testing lab, signed and sealed by Carlos S. Rionda, P. E.

2. Test report on (*Transferred from NOA #* **05-0928.02***)*
   1) Air Infiltration Test, per FBC, TAS 202-94
   2) Uniform Static Air Pressure Test, Loading per FBC TAS 202-94
   3) Water Resistance Test, per FBC, TAS 202-94
   4) Forced Entry Resistant test per TAS202-94 & AAMA 1302.5

Along with marked-up drawings and installation diagram of aluminum single hung windows (Fin/Flange mounted), prepared by Fenestration Testing Laboratory, Inc., Test Report No. **FTL-4324 (04112), 4350 (04117), 4346 (04116), 4363 (04120), 4323 (04111), 4406 (04189** all dated **November 08, 2004** and **4405 (04190)** dated November 12 2004, signed and sealed by Edmundo Largaespada, P.E.

C. CALCULATIONS

1. Anchor Calculations and structural analysis, prepared by Lawson Industries, Inc., dated August 4, 2009, signed and sealed by Thomas J. Sotos, P.E.
2. Anchor verification calculations, complying w/ FBC-2007, dated 8-4-2009, prepared, signed and sealed by Thomas J. Sotos, P. E
3. Glazing complies w/ ASTME-1300-02

D. QUALITY ASSURANCE

1. Miami Dade Building Code Compliance Office (BCCO)

E. MATERIAL CERTIFICATIONS

1 None

F. STATEMENTS

1. Statement letter of product conformance to FBC 2007, dated July, 2008 issued by Lawson Industries, signed and sealed by Thomas J. Sotos, P. E.
2. Statement letter of no financial interest in the testing Laboratory signed and sealed by Thomas J. Sotos, P. E.
3. Laboratory compliance statement, part of above referenced test reports, issued by Hurricane Engineering & Testing, Inc.

G. OTHER:

1. This NOA **revises** *NOA # **07-1029.05***, expiring on 07/07/10.

Fitz A. Harris, P.E.
Product Control Examiner
NOA No 09-0720.06
Expiration Date: July 07, 2010
Approval Date: October 28, 2009

FRAME HEAD
L-7601

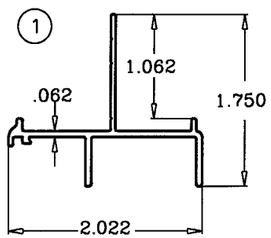

VENT TOP HEAVY RAIL
L-7506

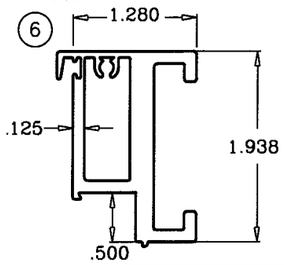

FRAME JAMB
L-7603

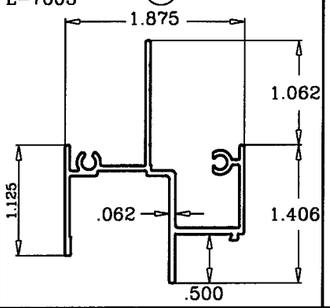

FIXED MEETING RAIL
L-7504

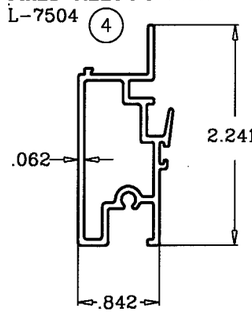

FRAME SILL
L-7602

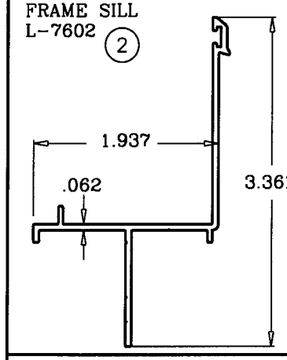

VENT JAMB
L-7508

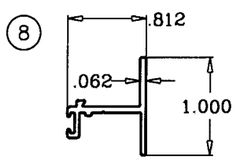

* NOTE:
ALL DIMENSIONS ARE
INCHES UNITS

SASH STOP

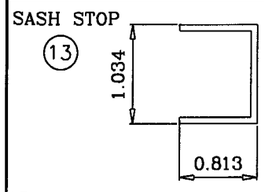

GLAZING BEAD
L-7516

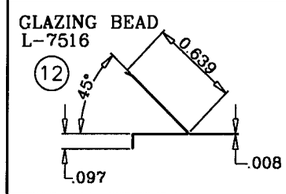

VENT TOP RAIL (Standard)
L-7505

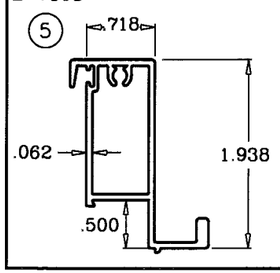

VENT BOTTOM RAIL
L-7507

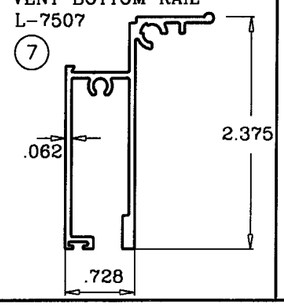

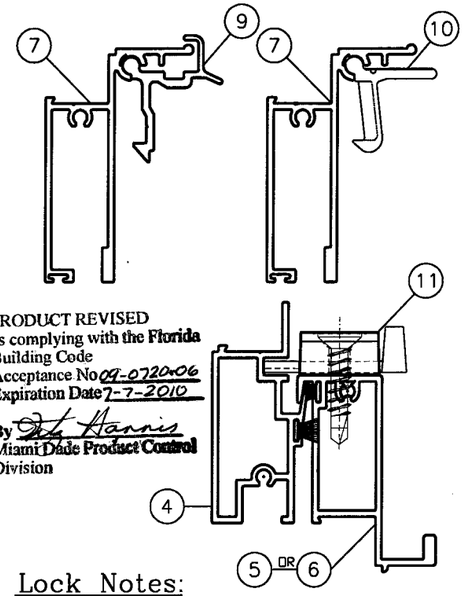

PRODUCT REVISED
as complying with the Florida
Building Code
Acceptance No 09-0720.06
Expiration Date 7-7-2010
By [illegible]
Miami Dade Product Control
Division

Lock Notes:

1. BOTH EXTRUDED ALUMINUM AND PLASTIC LIFT HANDLE LOCKS ARE QUALIFIED FOR USE ON ALL WINDOWS.
2. THE CAM LOCK IS QUALIFIED FOR USE ON ALL ANNEALED WINDOWS AND 1/8" TEMPERED WINDOWS ONLY.
3. TWO (2) LOCKS ARE REQUIRED PER EACH SASH.

LOCK (LATCH AND SWEEP) OPTIONS

CAM-SWEEP LATCH

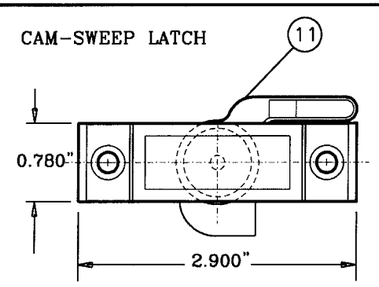

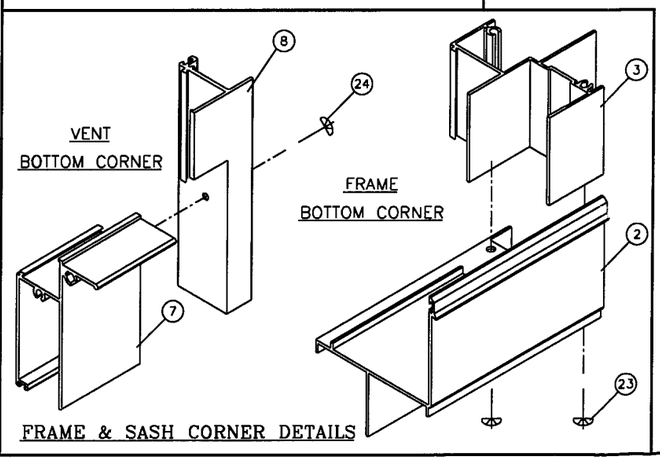

FRAME & SASH CORNER DETAILS

SH7600 FIN WINDOW BILL OF MATERIALS

ITEM #	PART #	DRWG. #	REQD.	DESCRIPTION	REMARKS
1	L-7601	LII-123	1	FRAME HEAD	6063-T6 ALUMINUM
2	L-7602	LII-122	1	FRAME SILL	6063-T6 ALUMINUM
3	L-7603	LII-128	2	FRAME JAMB	6063-T6 ALUMINUM
4	L-7504	LII-129	1	FIXED MEETING RAIL	6005-T5 ALUMINUM
5	L-7505	LII-125	1	VENT TOP RAIL STD. DUTY	6005-T5 ALUMINUM
6	L-7506	LII-126	1	VENT TOP RAIL HVY DUTY	6005-T5 ALUMINUM
7	L-7507	LII-136	1	VENT BOTTOM RAIL	6005-T5 ALUMINUM
8	L-7508	LII-124	1	VENT JAMB	6063-T5 ALUMINUM
9	*	*	2	VENT LATCH / LIFT LOCK	6063-T6 ALUMINUM
10	*	*	2	VENT LATCH / LIFT LOCK	INJECTED MOLDED
11	*	*	2	VENT LATCH / SWEEP	DIE CAST
12	L-7516	*	AS REQD.	GLAZING BEAD	ROLL FORMED ALUMINUM
13	*	*	2	VENT/SASH STOP	1 PER JAMB
14	*	SCHLEGEL	AS REQD.	TOP RAIL WEATHERSTRIP	.187" X 150" PILE
15	*	ULTRAFAB	AS REQD.	FXD. RAIL WEATHERSTRIP	.187" X 250" FIN SEAL
16	*	ULTRAFAB	AS REQD.	VENT JAMB WEATHERSTRIP	.187" X .280" FIN SEAL
17	*	ULTRAFAB	AS REQD.	FRAME SILL WEATHERSTRIP	.187" X .250" FIN SEAL
18	*	*	AS REQ'D.	BOTT. RAIL WEATHERSTRIP	3/8" DIA. BULB
19	*	*	2	VENT/SILL OPEN CELL PAD	1"x1"x1/2" FOAM PAD
20	*	*	2	SILL/JAMB JOINT GASKET	1/16" CLOSED CELL FOAM
21	L-7523	*	2	VENT TOP GUIDE / CAM	1 AT EACH END OF RAIL
22	L-7524	*	4	VENT JAMB FACE GUIDE	2 PER VENT JAMB
23	*	*	8	FRAME ASSEMBLY SCREWS	# 8 X 3/4" P.H. PHIL.
24	*	*	4	VENT ASSEMBLY SCREWS	# 8 X 1" P.H. PHILLIPS
25	*	*	2	FXD. MTG. RAIL SCREW	# 8 X 1" P.H. PHILLIPS
26	*	*	14	FRAME INSTALL'N SCREW	#10 X 1 1/4" F.H. / PHI.
27	L-7527	*	2	BLOCK & TACKLE BALANCE	1 PER JAMB
28	*	*	1	INSECT SCREEN	OPTIONAL
29	*	*	2	GLASS @ TOP & BOTTOM	See Detail @ Sheet 2 of 5
30	*	*	AS REQ'D	GLAZING SILICONE	See Detail @ Sheet 2 of 5
31	*	774-25B-767	AS REQ'D	"TruSeal" Swiggle Seal	Black -1/4" air space

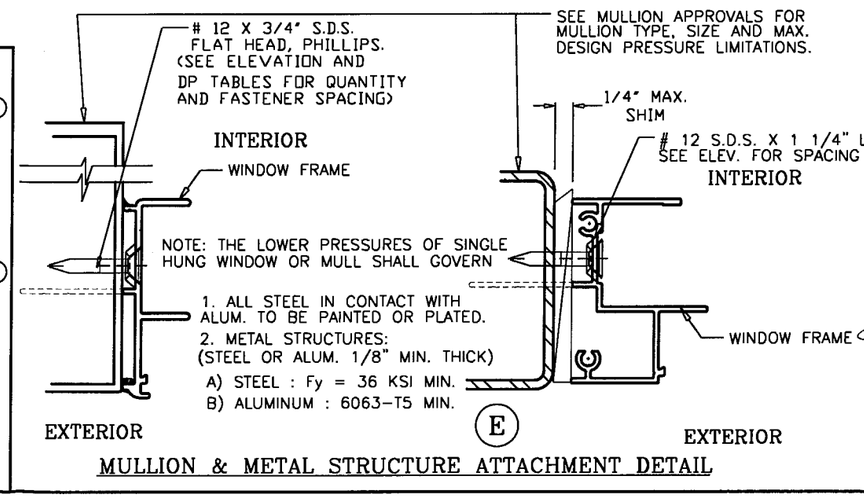

MULLION & METAL STRUCTURE ATTACHMENT DETAIL

LAWSON INDUSTRIES, INC.
8501 N.W. 90 ST.
MEDLEY, FLORIDA 33166
PH No. (305) 696-8660

MANUFACTURER OF QUALITY ALUMINUM WINDOWS AND GLASS DOORS

SH-7600 SINGLE HUNG FIN WINDOW

BILL OF MATERIALS, EXTRUSION DETAILS, ASSEMBLY DETAILS, AND GLAZING DETAILS

Revision Notes:
A. Revised glass charts w/ meeting rail types and Added Chart w/ 1/8" Tempered Glass
B. Qualified Cam Locks on all annealed windows and 1/8" temp. Changed tables to buck dims.

Drawn By: N. Erazo
Date Drawn: 09/20/04
Checked By: T. Sotos
Date Revised: 07/07/09
Revision Level: B
Scale:
Product Reference Number:
Drawing Number: L7600-0402
Sheet: 5 OF 5
Revision #:

THOMAS J. SOTOS
PROFESSIONAL ENGINEER
FL LIC. # 55225

SEP 23 2009
DATE

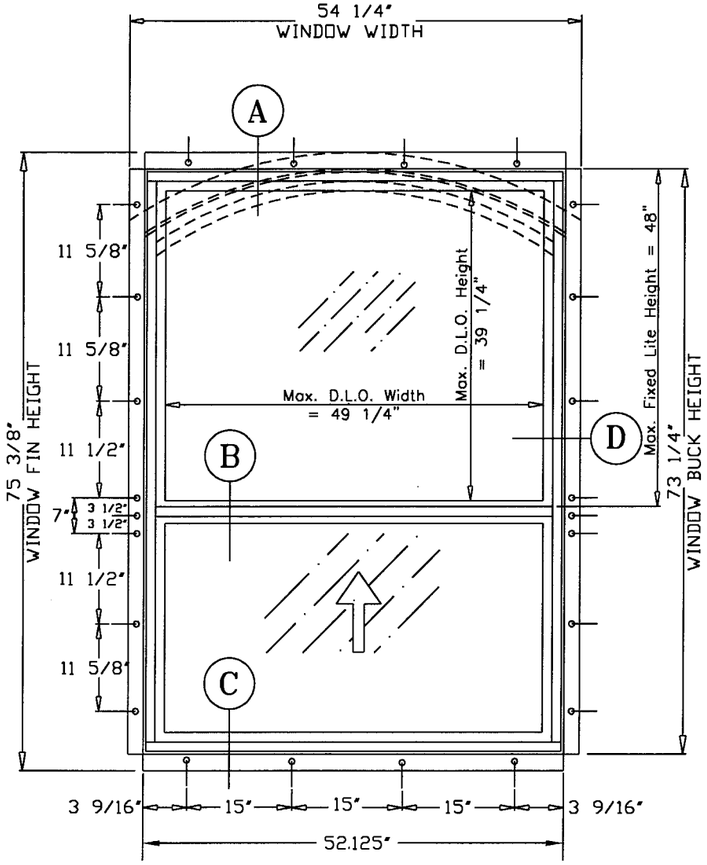

UNEQUAL LITE VIEW WINDOW
ELEVATION
(SEE TABLE V-1 & V-2 FOR DESIGN PRESSURE)

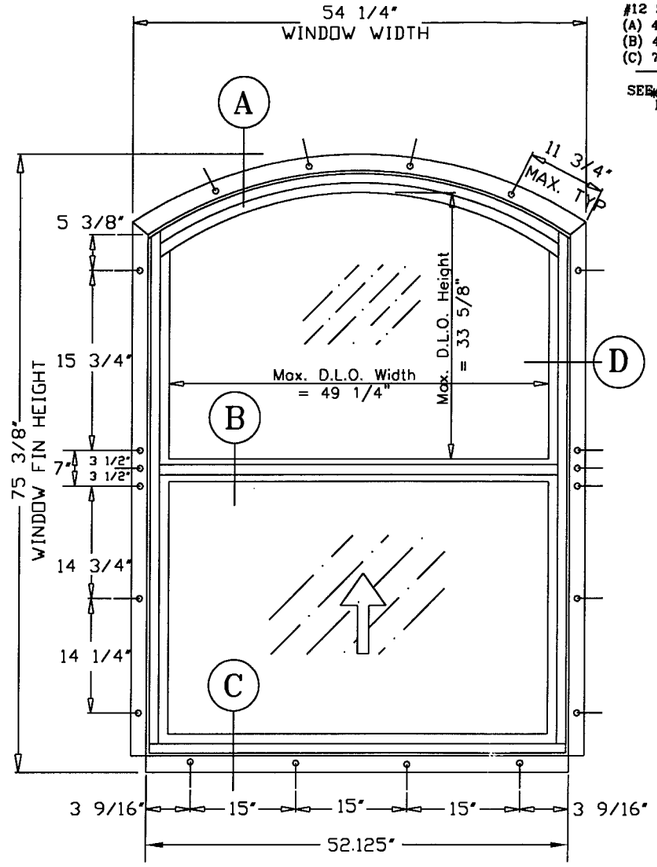

RADIUS HEAD EQUAL LITE WINDOW
ELEVATION

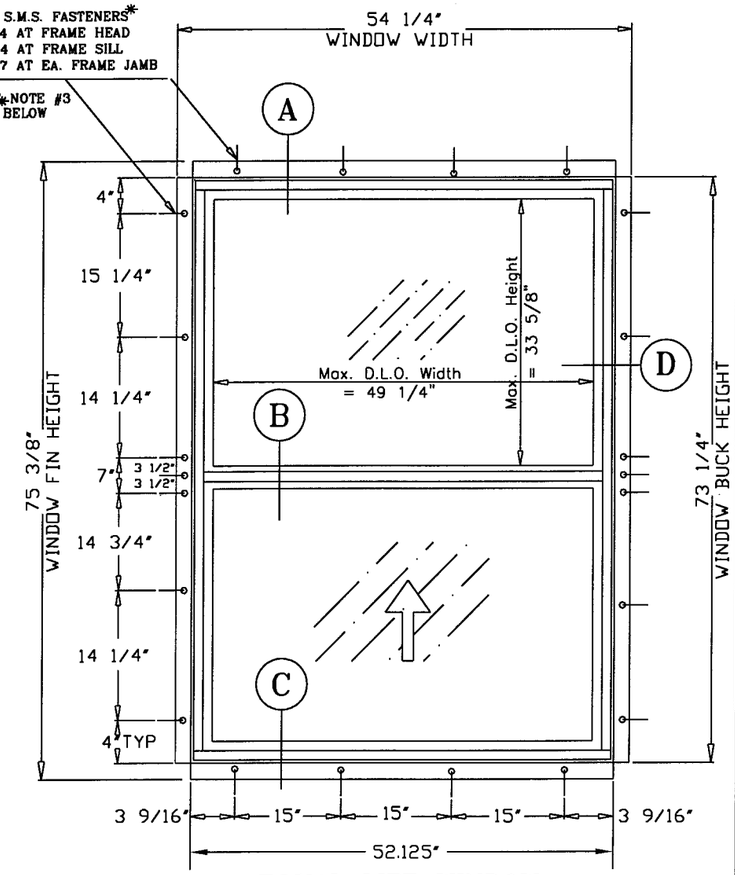

EQUAL LITE WINDOW
ELEVATION

SERIES-7600 SINGLE HUNG WINDOW - FIN FRAME - NON-IMPACT

Notes

1.) THIS WINDOW SYSTEM IS DESIGNED AND TESTED TO COMPLY WITH THE REQUIREMENTS OF THE 2007 FLORIDA BUILDING CODE AND ASTM 1300-98. THIS PRODUCT IS NOT IMPACT RESISTANT. WINDOWS ARE TO BE PROTECTED WITH MIAMI-DADE COUNTY APPROVED IMPACT RESISTANT SHUTTERS.
2.) 1 X OR 2 X WOOD BUCKS SHALL BE INSTALLED AND ANCHORED SO THAT THE BUILDINGRESITS THE SUPERIMPOSED LOADS IN ACCORDANCE WITH REQUIREMENTS OF 2007 F.B.C. & TO BE REVIEWED BY BUILDING OFFICIAL.
3.) ANCHORS SHOWN ABOVE ARE AS PER TEST UNITS. EXTERIOR ANCHOR SPACINGS WILL VARY WITH UNIT DIMENSIONS, AND THE NUMBER OF ANCHORS REQUIRED, AS SPECIFIED ON THE LOAD TABLES AT SHEET 3 &4.
4.) ANCHOR CONDITIONS NOT DESCRIBED IN THESE DRAWING'S ARE TO BE ENGINEERED ON A SITE SPECIFIC BASIS, UNDER SEPARATE APPROVAL AND TO BE REVIEWED BY BUILDING OFFICIAL.
5.) RADIUS HEAD WINDOWS ARE QUALIFIED FOR USE WITH ALL GLASS TYPES TABULATED HEREIN. HEREIN.
6.) VIEW WINDOWS ARE QUALIFIED FOR USE WITH 3/16" ANNEALED & 3/16" TEMPERED GLASS USING THE HEAVY DUTY MEETING RAIL ONLY.
7.) SEE SHEET #5 FOR SASH LOCK OPTIONS & NOTES.
8.) SEE SHEET #4 FOR GLAZING DETAILS & OPTIONS. (REFER TO SHEETS 3, & 4 FOR DESIGN PRESSURES.
9.) WOOD OPENING SHALL BE PROTECTED WITH AN APPROVED MOISTURE RESISTANT BARRIER (BY OTHERS), PRIOR TO WINDOW INSTALLATION. (SEE SHEET #2 FOR DETAIL & NOTES.
10.) APPROVAL APPLIES TO SINGLE UNITS, OR MULTIPLE UNITS AND MAY BE MULLED VERTICALLY OR HORIZONTALLY.
11.) MULLING SINGLE HUNG WINDOWS WITH OTHER TYPES OF MIAMI-DADE COUNTY APPROVED WINDOWS USING A MIAMI-DADE COUNTY APPROVED MULLION IN BETWEEN ARE ACCEPTABLE BUT THE LOWER PRESSURE FROM THE WINDOWS OR MULLION APPROVAL WILL APPLY TO THE ENTIRE MULLED SYSTEM.
12.) SEE SHEET # 5 FOR MULLION/METAL ATTACHMENT DETAILS & NOTES.

WINDOWS ARE TO BE PROTECTED WITH MIAMI DADE COUNTY APPROVED IMPACT RESISTANT SHUTTERS

PRODUCT REVISED
as complying with the Florida
Building Code
Acceptance No 09-0720.06
Expiration Date 7-7-2010
By [signature]
Miami Dade Product Control
Division

LAWSON INDUSTRIES, INC.
MANUFACTURER OF QUALITY ALUMINUM WINDOWS AND GLASS DOORS
8501 N.W. 90 ST.
MEDLEY, FLORIDA 33166
PH No. (305) 696-8660

SH-7600 SINGLE HUNG FIN WINDOW
APPROVED ELEVATIONS, CONFIGURATIONS AND NOTES

Revision #:	
Sheet:	1 OF 5
Drawing Number:	L7600-0402
Product Reference Number:	

Revision Notes:
A. Revised gloss charts w/ meeting rail types and Added Chart w/ 1/8" Tempered Glass
B. Qualified Cam Locks on all annealed windows and 1/8" temp. Changed tables to buck dims.

Drawn By:	N. Erazo	Date Drawn:	09/20/04
Checked By:	T. Sotos	Date Revised:	07/07/09
Revision Level:	B	Scale:	

THOMAS J. SOTOS
PROFESSIONAL ENGINEER
FL LIC. # 55225

SEP 23 2009

DATE

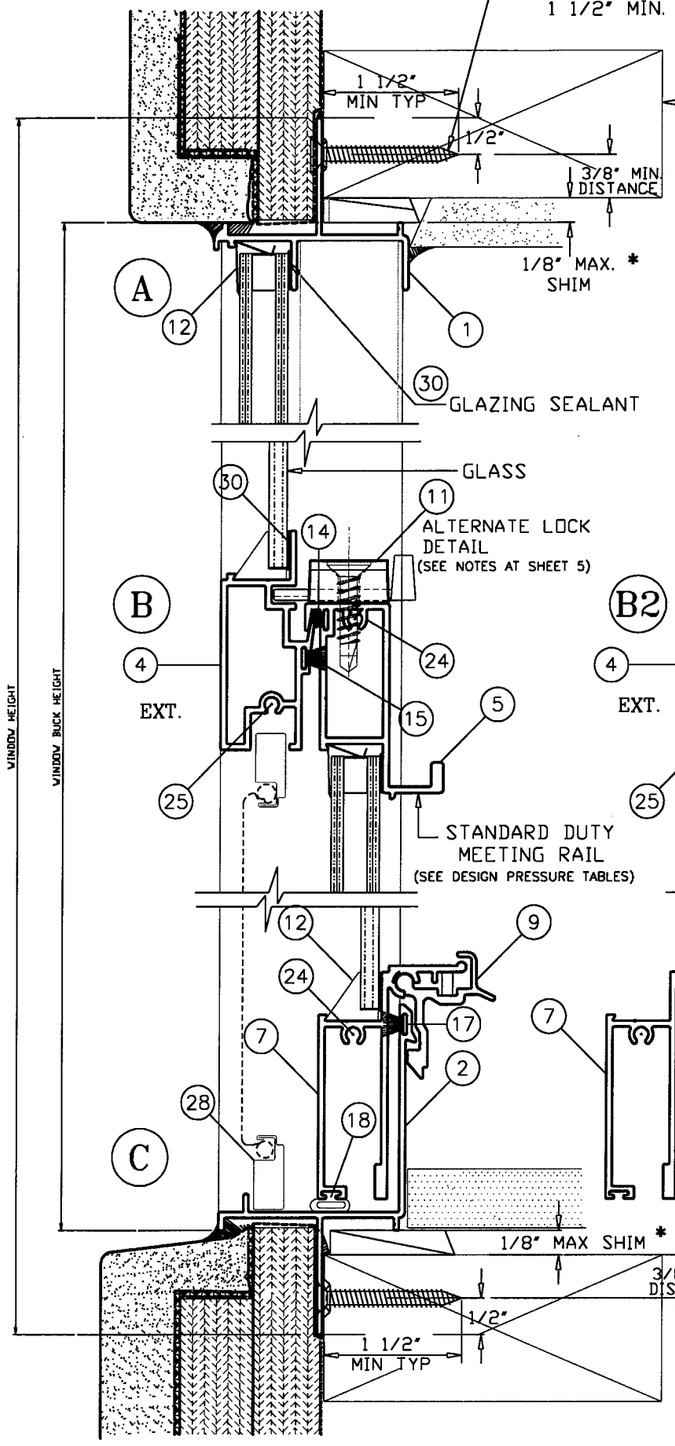

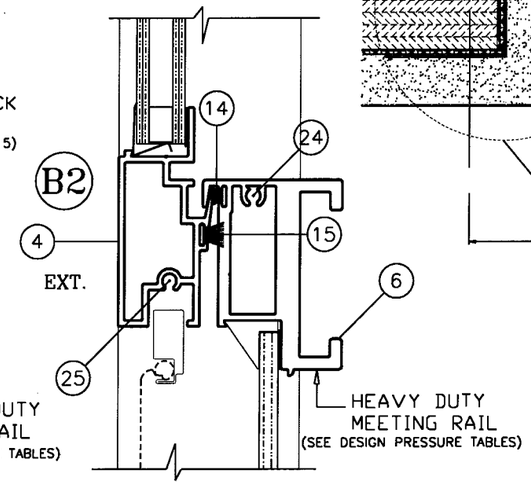

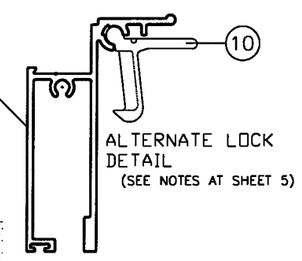

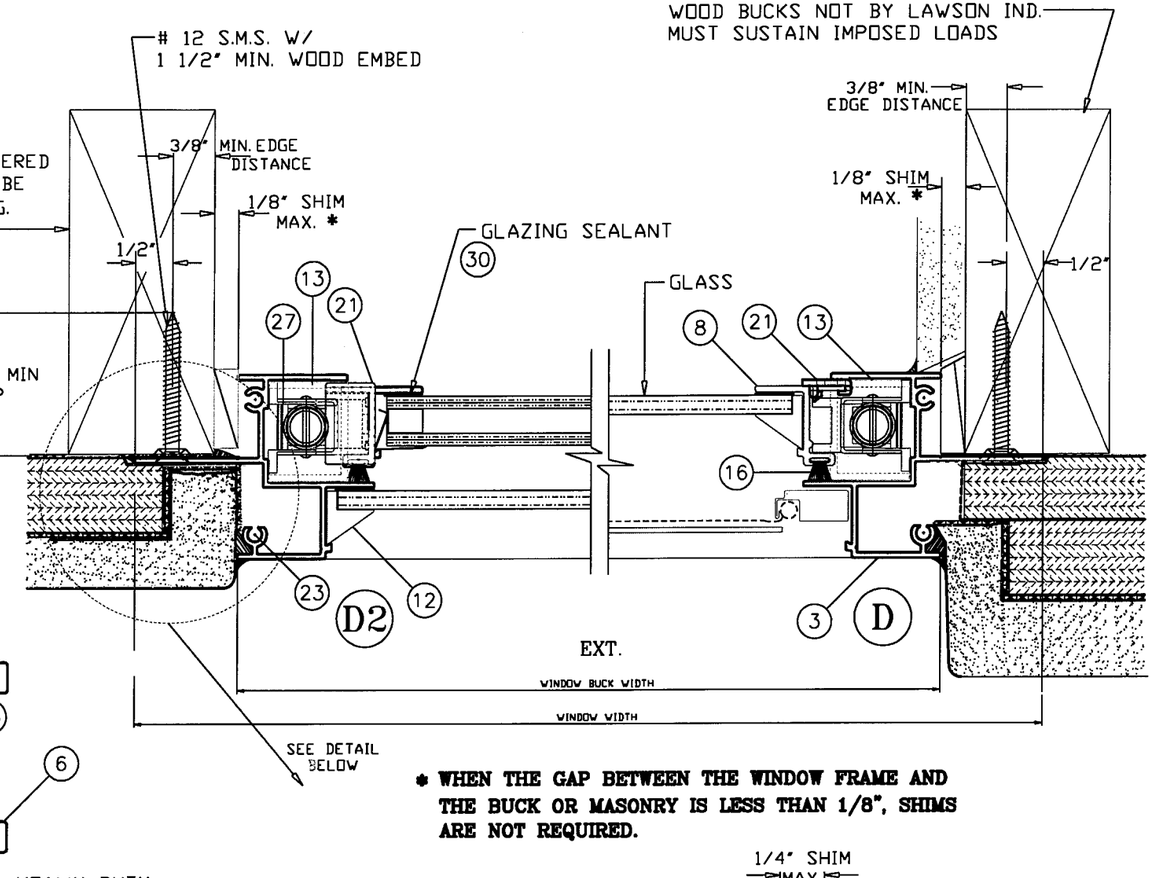

*** WHEN THE GAP BETWEEN THE WINDOW FRAME AND THE BUCK OR MASONRY IS LESS THAN 1/8", SHIMS ARE NOT REQUIRED.**

PRODUCT REVISED
as complying with the Florida
Building Code
Acceptance No 04-0720.06
Expiration Date 7-7-2010
By Tito Harris
Miami Dade Product Control
Division

WINDOW INSTALLATION NOTES:

1. THE WINDOW OPENING MUST BE PROTECTED WITH A CODE APPROVED FELT OR MOISTURE/WEATHER BARRIER, APPROX. 12" WIDE THROUGHOUT ENTIRE PERIMETER OF THE WINDOW MOUNTING FIN. (NOT BY LAWSON INDUSTRIES)
2. THE WINDOW FRAME FIN TO BE BACK-BEDDED W/ AN EXT. GRADE CAULK THROUGHOUT THE ENTIRE PERIMETER OF FIN BY WINDOW INSTALLER (TYP.)
3. THE EXPOSED EXT. PERIMETER OF THE WINDOW FRAME TO BE SEALED W/ AN APPROVED EXTERIOR GRADE CAULK BY OTHERS (TYP.)

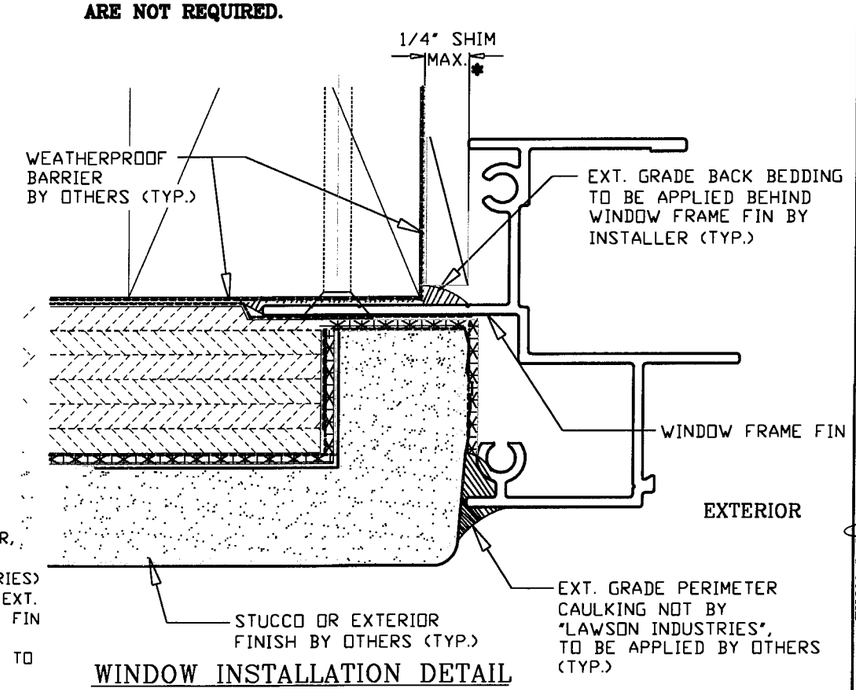

WINDOW INSTALLATION DETAIL

LAWSON INDUSTRIES, INC.
8501 N.W. 90 ST.
MEDLEY, FLORIDA 33166
PH No. (305) 696-8660
MANUFACTURER OF QUALITY ALUMINUM WINDOWS AND GLASS DOORS

SH-7600 SINGLE HUNG FIN WINDOW

CROSS SECTIONAL DETAILS FOR STD/HVY DUTY MEETING RAIL

Product Reference Number:	
Drawing Number:	L7600-0402
Sheet:	2 OF 5
Revision #:	

Revision Notes:
A. Revised glass charts w/ meeting rail types and Added Chart w/ 1/8" Tempered Glass
B. Qualified Cam Locks on all annealed windows and 1/8" temp. Changed tables to buck dims.

Drawn By:	N. Erazo	Date Drawn:	09/20/04
Checked By:	T. Sotos	Date Revised:	07/07/09
Revision Level:	B	Scale:	

THOMAS J. SOTOS
PROFESSIONAL ENGINEER
FL LIC. # 55225

DATE SEP 23 2009

7600 Non Impact Single Hung Window
Test # FTL 5284 A-1 - 1/4" Annealed
Pressure Limited to Negative 100psf.
Fin Frame w/ Standard Meeting Rail

Buck Width	Buck Height	P(+) psf	P(-) psf	Each Jamb Anchors	Head & Sill Anchors
18.125	25	70.00	100.00	3	2
18.125	37.375	70.00	100.00	4	2
18.125	49.625	70.00	100.00	6	2
18.125	57	70.00	100.00	7	2
18.125	62	70.00	100.00	7	2
18.125	73.25	70.00	100.00	9	2
25.5	25	70.00	100.00	4	2
25.5	37.375	70.00	100.00	5	3
25.5	49.625	70.00	100.00	7	3
25.5	57	70.00	100.00	8	3
25.5	62	70.00	100.00	9	3
25.5	73.25	70.00	100.00	11	3
36	25	70.00	100.00	4	3
36	37.375	70.00	100.00	6	4
36	49.625	70.00	95.62	8	4
36	57	70.00	90.30	9	4
36	62	70.00	87.97	10	4
36	73.25	70.00	85.76	12	4
52.125	25	70.00	96.80	6	4
52.125	37.375	70.00	71.11	6	4
52.125	49.625	58.30	58.30	7	4
52.125	57	53.41	53.41	7	4
52.125	62	50.86	50.86	8	4
52.125	73.25	46.70	46.70	9	4

PRODUCT REVISED
as complying with the Fl
Building Code
Acceptance No. 04-0720-06
Expiration Date 7-7-2010
By Bill Harris
Miami Dade Product Control
Division

7600 Non Impact Single Hung Window
Test # FTL 4406 - 3/16" Annealed
Pressure Limited to Negative 100psf.
Fin Frame w/ Standard Duty Rail

Buck Width	Buck Height	P(+) psf	P(-) psf	Each Jamb Anchors	Head & Sill Anchors
18.125	25	70.00	100.00	4	2
18.125	37.375	70.00	100.00	4	3
18.125	49.625	70.00	100.00	7	2
18.125	57	70.00	100.00	7	2
18.125	62	70.00	100.00	8	2
18.125	73.25	70.00	100.00	10	2
25.5	25	70.00	100.00	4	3
25.5	37.375	70.00	100.00	6	3
25.5	49.625	70.00	100.00	8	3
25.5	57	70.00	100.00	8	3
25.5	62	70.00	100.00	10	3
25.5	73.25	70.00	89.80	11	3
36	25	70.00	100.00	4	4
36	37.375	70.00	100.00	7	4
36	49.625	70.00	93.30	8	4
36	57	70.00	82.00	8	4
36	62	70.00	77.20	10	4
36	73.25	66.80	66.80	10	4
52.125	25	70.00	100.00	6	6
52.125	37.375	70.00	76.13	7	6
52.125	49.625	62.42	62.42	8	6
52.125	57	52.70	52.70	8	4
52.125	62	49.90	49.90	8	4
52.125	73.25	45.80	45.80	10	4

7600 Non Impact Single Hung View Window
Test # FTL 4363 - 3/16" Annealed View
Fin Frame w/ Heavy Duty Rail
TABLE V-1

CODE SIZE	Buck` Width	Buck Height	P(+) psf	P(-) psf	Each Jamb Anchors	Head & Sill Anchors
14 - 2	18.125	49.625	70.0	100.0	8	3
14 - 3	18.125	49.625	70.0	100.0	10	3
15 - 3	18.125	62	70.0	100.0	10	3
15 - 4	18.125	62	70.0	100.0	11	3
16 - 4	18.125	73.25	70.0	100.0	11	3
16 - 45	18.125	73.25	70.0	100.0	11	3
16 - 5	18.125	73.25	70.0	100.0	12	3
H34 - 2	25.5	49.625	70.0	84.5	7	3
H34 - 3	25.5	49.625	70.0	104.0	8	3
H35 - 3	25.5	62	70.0	72.4	7	3
H35 - 4	25.5	62	70.0	84.5	8	3
H36 - 4	25.5	73.25	64.4	64.4	8	3
H36 - 45	25.5	73.25	70.0	70.2	8	3
H36 - 5	25.5	73.25	70.0	74.2	10	3
24 - 2	36	49.625	63.8	63.8	7	3
24 - 3	36	49.625	70.0	75.2	7	3
25 - 3	36	62	55.2	55.2	7	3
25 - 4	36	62	63.8	63.8	8	3
26 - 4	36	73.25	49.1	49.1	7	3
26 - 45	36	73.25	53.3	53.3	8	3
26 - 5	36	73.25	56.6	56.6	8	3
34 - 2	52.125	49.625	44.6	44.6	6	3
34 - 3	52.125	49.625	49.0	49.0	7	3
35 - 3	52.125	62	41.5	41.5	7	3
35 - 4	52.125	62	44.6	44.6	7	4
36 - 4	52.125	73.25	39.0	39.0	8	3
36 - 45	52.125	73.25	40.8	40.8	8	4
36 - 5	52.125	73.25	42.2	42.2	8	4

7600 Non Impact Single Hung Window
Test # FTL 4344 - 1/4" Annealed
Pressure Limited to Negative 100psf.
Fin Frame w/ Heavy Duty Rail

Buck Width	Buck Height	P(+) psf	P(-) psf	Each Jamb Anchors	Head & Sill Anchors
18.125	25	70.00	100.00	4	2
18.125	37.375	70.00	100.00	4	3
18.125	49.625	70.00	100.00	7	2
18.125	57	70.00	100.00	7	2
18.125	62	70.00	100.00	8	2
18.125	73.25	70.00	100.00	10	2
25.5	25	70.00	100.00	4	3
25.5	37.375	70.00	100.00	6	3
25.5	49.625	70.00	100.00	8	3
25.5	57	70.00	100.00	8	3
25.5	62	70.00	100.00	10	3
25.5	73.25	70.00	100.00	12	3
36	25	70.00	100.00	4	4
36	37.375	70.00	100.00	7	4
36	49.625	70.00	100.00	10	6
36	57	70.00	100.00	11	6
36	62	70.00	100.00	12	6
36	73.25	70.00	86.00	12	4
52.125	25	70.00	100.00	6	6
52.125	37.375	70.00	100.00	8	7
52.125	49.625	70.00	93.00	11	7
52.125	57	70.00	74.90	10	7
52.125	62	66.10	66.10	11	6
52.125	73.25	57.70	57.70	11	6

7600 Non Impact Single Hung Window
Test # FTL 4324 - 3/16" Tempered
Pressure Limited to Negative 100psf.
Fin Frame w/ Heavy Duty Rail

Buck Width	Buck Height	P(+) psf	P(-) psf	Each Jamb Anchors	Head & Sill Anchors
18.125	25	70	100.00	4	2
18.125	37.375	70.00	100.00	4	3
18.125	49.625	70.00	100.00	7	2
18.125	57	70.00	100.00	7	2
18.125	62	70.00	100.00	8	2
18.125	73.25	70.00	100.00	10	2
25.5	25	70.00	100.00	4	3
25.5	37.375	70.00	100.00	6	3
25.5	49.625	70.00	100.00	8	3
25.5	57	70.00	100.00	8	3
25.5	62	70.00	100.00	10	3
25.5	73.25	70.00	100.00	12	3
36	25	70.00	100.00	4	4
36	37.375	70.00	100.00	7	4
36	49.625	70.00	100.00	10	6
36	57	70.00	100.00	11	6
36	62	70.00	100.00	12	6
36	73.25	70.00	100.00	15	6
52.125	25	70.00	100.00	6	6
52.125	37.375	70.00	100.00	8	7
52.125	49.625	70.00	99.87	12	7
52.125	57	70.00	91.49	12	7
52.125	62	70.00	87.12	14	7
52.125	73.25	70.00	80.00	15	7

7600 Non Impact Single Hung View Window
Test # FTL 4345 - 3/16" Tempered View
Pressure Limited to Negative 100psf.
Fin Frame w/ Heavy Duty Rail - TABLE V-2

CODE SIZE	Buck Width	Buck Height	P(+) psf	P(-) psf	Each Jamb Anchors	Head & Sill Anchors
14 - 2	18.125	49.625	70.0	100.0	7	2
14 - 3	18.125	49.625	70.0	100.0	7	2
15 - 3	18.125	62	70.0	100.0	8	2
15 - 4	18.125	62	70.0	100.0	8	2
16 - 4	18.125	73.25	70.0	100.0	10	2
16 - 45	18.125	73.25	70.0	100.0	10	2
16 - 5	18.125	73.25	70.0	100.0	10	2
H34 - 2	25.5	49.625	70.0	100.0	8	3
H34 - 3	25.5	49.625	70.0	100.0	8	3
H35 - 3	25.5	62	70.0	100.0	10	3
H35 - 4	25.5	62	70.0	100.0	10	3
H36 - 4	25.5	73.25	70.0	100.0	12	3
H36 - 45	25.5	73.25	70.0	100.0	12	3
H36 - 5	25.5	73.25	70.0	100.0	12	3
24 - 2	36	49.625	70.0	100.0	10	3
24 - 3	36	49.625	70.0	100.0	10	4
25 - 3	36	62	70.0	100.0	12	4
25 - 4	36	62	70.0	100.0	12	6
26 - 4	36	73.25	70.0	100.0	15	4
26 - 45	36	73.25	70.0	100.0	15	6
26 - 5	36	73.25	70.0	100.0	15	6
34 - 2	52.125	49.625	70.0	100.0	12	4
34 - 3	52.125	49.625	70.0	100.0	12	6
35 - 3	52.125	62	70.0	92.9	15	6
35 - 4	52.125	62	70.0	87.6	14	7
36 - 4	52.125	73.25	70.0	84.1	16	7
36 - 45	52.125	73.25	70.0	81.3	15	7
36 - 5	52.125	73.25	70.0	80.0	15	7

LAWSON INDUSTRIES, INC.
8501 N.W. 90 ST.
MEDLEY, FLORIDA 33166
PH No. (305) 696-8660

MANUFACTURER OF QUALITY ALUMINUM WINDOWS AND GLASS DOORS

SH-7600 SINGLE HUNG FIN WINDOW

DESIGN LOAD CHARTS W/ MONOLITHIC GLASS

Revision #:
Sheet: 3 OF 5
Drawing Number: L7600-0402
Product Reference Number:

Revision Notes:
A. Revised glass charts w/ meeting rail types and Added Chart w/ 1/8" Tempered Glass
B. Qualified Cam Locks on all annealed windows and 1/8" temp. Changed tables to buck dims.

Drawn By: N. Erazo
Date Drawn: 09/20/04
Checked By: T. Sotos
Date Revised: 07/07/09
Revision Level: B
Scale:

THOMAS J. SOTOS
PROFESSIONAL ENGINEER
FL LIC. # 55225

SEP 23 2009

DATE_____

7600 Non Impact Single Hung Window
Test # FTL 5284 A-4 - 1/8" Annealed
Pressure Limited to Negative 100psf.
Fin Frame w/ Standard Meeting Rail

Buck Width	Buck Height	P(+) psf	P(-) psf	Each Jamb Anchors	Head & Sill Anchors
18.125	25	70.00	100.00	3	2
18.125	37.375	70.00	100.00	4	2
18.125	49.625	70.00	100.00	6	2
18.125	57	70.00	85.30	6	2
18.125	62	70.00	78.50	6	2
18.125	73.25	66.80	66.80	6	1
25.5	25	70.00	100.00	4	2
25.5	37.375	70.00	95.00	5	3
25.5	49.625	70.00	77.90	6	2
25.5	57	67.40	67.40	6	2
25.5	62	61.40	61.40	6	2
25.5	73.25	50.40	50.40	6	2
36	25	70.00	91.03	4	3
36	37.375	62.20	62.20	4	3
36	49.625	52.50	52.50	5	3
36	57	49.90	49.90	5	3
36	62	47.40	47.40	6	3
36	73.25	41.40	41.40	6	2
52.125	25	60.11	60.11	4	3
52.125	37.375	44.16	44.16	4	3
52.125	49.625	31.40	31.40	4	3
52.125	57	31.00	31.00	5	3
52.125	62	30.80	30.80	5	3
52.125	73.25	29.00	29.00	6	3

7600 Non Impact Single Hung Window
Test # FTL 5284 A-3 - 1/2" Overall Insulated w/ 1/8" Annealed
Pressure Limited to Negative 100psf.
Fin Frame w/ Standard Meeting Rail

Buck Width	Buck Height	P(+) psf	P(-) psf	Each Jamb Anchors	Head & Sill Anchors
18.125	25	70.00	100.00	3	2
18.125	37.375	70.00	100.00	4	2
18.125	49.625	70.00	100.00	6	2
18.125	57	70.00	100.00	7	2
18.125	62	70.00	100.00	7	2
18.125	73.25	70.00	100.00	9	2
25.5	25	70.00	100.00	4	2
25.5	37.375	70.00	100.00	5	3
25.5	49.625	70.00	100.00	7	3
25.5	57	70.00	100.00	8	3
25.5	62	70.00	100.00	9	3
25.5	73.25	70.00	90.80	10	3
36	25	70.00	100.00	4	3
36	37.375	70.00	100.00	6	4
36	49.625	70.00	94.50	8	4
36	57	70.00	89.80	9	4
36	62	70.00	85.30	10	4
36	73.25	70.00	74.50	11	4
52.125	25	70.00	96.80	6	4
52.125	37.375	70.00	71.11	6	4
52.125	49.625	56.50	56.50	7	4
52.125	57	53.41	53.41	7	4
52.125	62	50.86	50.86	8	4
52.125	73.25	46.70	46.70	9	4

7600 Non Impact Single Hung Window
Test # FTL 4350 - 1/2" Overall Insulated w/ 1/8" Annealed
Pressure Limited to Negative 100psf.
Fin Frame w/ Heavy Duty Rail

Buck Width	Buck Height	P(+) psf	P(-) psf	Each Jamb Anchors	Head & Sill Anchors
18.125	25	70.00	100.00	4	2
18.125	37.375	70.00	100.00	4	3
18.125	49.625	70.00	100.00	7	2
18.125	57	70.00	100.00	7	2
18.125	62	70.00	100.00	8	2
18.125	73.25	70.00	100.00	10	2
25.5	25	70.00	100.00	4	3
25.5	37.375	70.00	100.00	6	3
25.5	49.625	70.00	100.00	8	3
25.5	57	70.00	100.00	8	3
25.5	62	70.00	100.00	10	3
25.5	73.25	70.00	90.80	11	3
36	25	70.00	100.00	4	4
36	37.375	70.00	100.00	7	4
36	49.625	70.00	94.50	10	4
36	57	70.00	89.80	10	4
36	62	70.00	85.30	11	4
36	73.25	70.00	74.50	11	4
52.125	25	70.00	100.00	6	6
52.125	37.375	70.00	84.50	8	6
52.125	49.625	56.50	56.50	7	4
52.125	57	55.90	55.90	8	6
52.125	62	55.50	55.50	8	6
52.125	73.25	52.50	52.50	10	6

7600 Non Impact Single Hung Window
Test # FTL 5284 A-5 - 1/8" Tempered
Pressure Limited to Negative 100psf.
Fin Frame w/ Standard Meeting Rail

Buck Width	Buck Height	P(+) psf	P(-) psf	Each Jamb Anchors	Head & Sill Anchors
18.125	25	70.00	100.00	4	2
18.125	37.375	70.00	100.00	4	3
18.125	49.625	70.00	100.00	7	2
18.125	57	70.00	100.00	7	2
18.125	62	70.00	100.00	8	2
18.125	73.25	70.00	100.00	10	2
25.5	25	70.00	100.00	4	3
25.5	37.375	70.00	100.00	6	3
25.5	49.625	70.00	100.00	8	3
25.5	57	70.00	100.00	8	3
25.5	62	70.00	100.00	10	3
25.5	73.25	70.00	100.00	12	3
36	25	70.00	100.00	4	4
36	37.375	70.00	100.00	7	4
36	49.625	70.00	100.00	10	6
36	57	70.00	100.00	11	6
36	62	70.00	100.00	12	6
36	73.25	70.00	86.00	12	4
52.125	25	70.00	100.00	6	6
52.125	37.375	70.00	100.00	8	7
52.125	49.625	70.00	93.00	11	7
52.125	57	70.00	74.90	10	7
52.125	62	66.10	66.10	11	6
52.125	73.25	57.70	57.70	11	6

7600 Non Impact Single Hung Window
Test # FTL 4351 - 1/2" Overall Insulated w/ 1/8" Tempered
Pressure Limited to Negative 100psf.
Fin Frame w/ Heavy Duty rail

Buck Width	Buck Height	P(+) psf	P(-) psf	Each Jamb Anchors	Head & Sill Anchors
18.125	25	70.00	100.00	4	2
18.125	37.375	70.00	100.00	4	3
18.125	49.625	70.00	100.00	7	2
18.125	57	70.00	100.00	7	2
18.125	62	70.00	100.00	8	2
18.125	73.25	70.00	100.00	10	2
25.5	25	70.00	100.00	4	3
25.5	37.375	70.00	100.00	6	3
25.5	49.625	70.00	100.00	8	3
25.5	57	70.00	100.00	8	3
25.5	62	70.00	100.00	10	3
25.5	73.25	70.00	100.00	12	3
36	25	70.00	100.00	4	4
36	37.375	70.00	100.00	7	4
36	49.625	70.00	100.00	10	6
36	57	70.00	100.00	11	6
36	62	70.00	100.00	12	6
36	73.25	70.00	100.00	15	6
52.125	25	70.00	100.00	6	6
52.125	37.375	70.00	100.00	8	7
52.125	49.625	70.00	99.87	12	7
52.125	57	70.00	91.49	12	7
52.125	62	70.00	87.12	14	7
52.125	73.25	70.00	80.00	15	7

Glazing Description, Details & Options

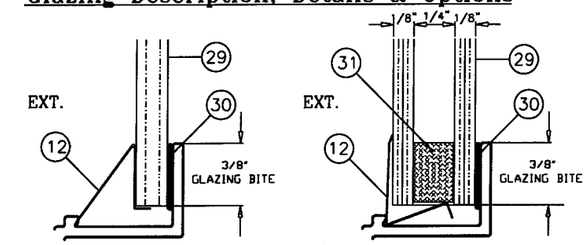

MONOLITHIC GLASS
ANNEALED OR TEMPERED
1/8", 3/16" OR 1/4" THICK
(SEE DESIGN PRESSURE TABLES)

1/2" OVERALL INSULATED GLASS
CONSIST OF:
1/8" ANNEALED OR TEMPERED LITE
+ 1/4" AIR SPACE
+ 1/8" ANNEALED OR TEMPERED LITE
(SEE DESIGN PRESSURE TABLES)

Glazing Sealant Types & Options

(30)
1) Schnee-Morehead 5731
2) Schnee-Morehead 5732
3) GE SCS 1000 Clear Silcone
4) Dow Corning Clear Silcone

PRODUCT REVISED
as complying with the Florida
Building Code
Acceptance No 09-0720.06
Expiration Date 7-7-2010
By Judy Harris
Miami Dade Product Control
Division

LAWSON INDUSTRIES, INC.
8501 N.W. 90 ST.
MEDLEY, FLORIDA 33166
PH No. (305) 696-8660
MANUFACTURER OF QUALITY ALUMINUM WINDOWS AND GLASS DOORS

SH-7600 SINGLE HUNG FIN WINDOW
DESIGN LOAD CHARTS W/ MONOLITHIC & INSULATED GLASS, GLAZING DETAILS

Product Reference Number:
Drawing Number: L7600-0402
Sheet: 4 OF 5
Revision #:

Revision Notes:
A. Revised glass charts w/ meeting rail types and Added Chart w/ 1/8" Tempered Glass
B. Qualified Cam Locks on all annealed windows and 1/8" temp. Changed tables to buck dims.

Drawn By: N. Erazo
Date Drawn: 09/20/04
Checked By: T. Sotos
Date Revised: 07/07/09
Revision Level: B
Scale:

THOMAS J. SOTOS
PROFESSIONAL ENGINEER
FL LIC. # 55225

SEP 26 2008

DATE