MIAMI-DADE COUNTY
BUILDING CODE COMPLIANCE OFFICE (BCCO)
PRODUCT CONTROL DIVISION

MIAMI-DADE COUNTY, FLORIDA
METRO-DADE FLAGLER BUILDING
140 WEST FLAGLER STREET, SUITE 1603
MIAMI, FLORIDA 33130-1563
(305) 375-2901 FAX (305) 372-6339
www.miamidade.gov/buildingcode

NOTICE OF ACCEPTANCE (NOA)

Oldcastle Glass Engineered Products
803 Airport Road
Terrell, TX 75160

SCOPE:

This NOA is being issued under the applicable rules and regulations governing the use of construction materials. The documentation submitted has been reviewed by Miami-Dade County Product Control Division and accepted by the Board of Rules and Appeals (BORA) to be used in Miami Dade County and other areas where allowed by the Authority Having Jurisdiction (AHJ).

This NOA shall not be valid after the expiration date stated below. The Miami-Dade County Product Control Division (In Miami Dade County) and/or the AHJ (in areas other than Miami Dade County) reserve the right to have this product or material tested for quality assurance purposes. If this product or material fails to perform in the accepted manner, the manufacturer will incur the expense of such testing and the AHJ may immediately revoke, modify, or suspend the use of such product or material within their jurisdiction. BORA reserves the right to revoke this acceptance, if it is determined by Miami-Dade County Product Control Division that this product or material fails to meet the requirements of the applicable building code. This product is approved as described herein, and has been designed to comply with the Florida Building Code, including the High Velocity Hurricane Zone.

DESCRIPTION: Series "FG-5000" Flush Glazed Aluminum Window Wall System – L.M.I.

APPROVAL DOCUMENT: Drawing No. **09-074**, titled Series FG-5000 Flush Glazed Aluminum Window Wall System Large and Small Missile Impact Laminated Glass", sheets 1 through 22 of 22, dated 05/14/09, prepared by Tilteco, Inc., signed and sealed by Walter A. Tillit, Jr., P.E., bearing the Miami-Dade County Product Control Approval stamp with the Notice of Acceptance number and approval date by the Miami-Dade County Product Control Division.

MISSILE IMPACT RATING: Large and Small Missile Impact Resistant

LABELING: Each unit shall bear a permanent label with the manufacturer's name or logo, city, state and following statement: "Miami-Dade County Product Control Approved", unless otherwise noted herein.

RENEWAL of this NOA shall be considered after a renewal application has been filed and there has been no change in the applicable building code negatively affecting the performance of this product.

TERMINATION of this NOA will occur after the expiration date or if there has been a revision or change in the materials, use, and/or manufacture of the product or process. Misuse of this NOA as an endorsement of any product, for sales, advertising or any other purposes shall automatically terminate this NOA. Failure to comply with any section of this NOA shall be cause for termination and removal of NOA.

ADVERTISEMENT: The NOA number preceded by the words Miami-Dade County, Florida, and followed by the expiration date may be displayed in advertising literature. If any portion of the NOA is displayed, then it shall be done in its entirety.

INSPECTION: A copy of this entire NOA shall be provided to the user by the manufacturer or its distributors and shall be available for inspection at the job site at the request of the Building Official.

This NOA consists of this page 1 and evidence pages E-1 and E-2, as well as approval document mentioned above.

The submitted documentation was reviewed by **Manuel Perez, P.E.**

MIAMI-DADE COUNTY APPROVED

NOA No. 09-0721.03
Expiration Date: November 18, 2014
Approval Date: November 18, 2009

Oldcastle Glass Engineered Products

NOTICE OF ACCEPTANCE: EVIDENCE SUBMITTED

A. DRAWINGS

1. Manufacturer's die drawings and sections.
2. Drawing No **09-074**, Sheets 1 through 22 of 22, titled Series FG-5000 Flush Glazed Aluminum Window Wall System Large & Small Missile Impact Laminated Glass", dated 05/14/09, prepared by Tilteco, Inc., signed and sealed by Walter A. Tillit, Jr., P.E.

B. TESTS

1. Test reports on: 1) Air Infiltration Test, per FBC, TAS 202-94
   2) Uniform Static Air Pressure Test, Loading per FBC TAS 202-94
   3) Water Resistance Test, per FBC, TAS 202-94
   4) Large Missile Impact Test per FBC, TAS 201-94
   5) Cyclic Wind Pressure Loading per FBC, TAS 203-94

   along with marked-up drawings and installation diagram of Vistawall FG-5000 Vanceva – wet glazed (SGP by DuPont) storefront system, prepared by Architectural Testing, Inc., Test Report No. **ATI-86111.01-401-18**, specimen #1, dated 02/09/09, signed and sealed by Joseph A. Reed, P.E.
2. Test reports on: 1) Air Infiltration Test, per FBC, TAS 202-94
   2) Uniform Static Air Pressure Test, Loading per FBC TAS 202-94
   3) Water Resistance Test, per FBC, TAS 202-94
   4) Large Missile Impact Test per FBC, TAS 201-94
   5) Cyclic Wind Pressure Loading per FBC, TAS 203-94

   along with marked-up drawings and installation diagram of Vistawall FG-5000 Vanceva – wet glazed (Vanceva by Solutia) storefront system, prepared by Architectural Testing, Inc., Test Report No. **ATI-89818.01-401-18**, specimen #1, dated 03/19/09, signed and sealed by Joseph A. Reed, P.E. 3
3. Test reports on: 1) Air Infiltration Test, per FBC, TAS 202-94
   2) Uniform Static Air Pressure Test, Loading per FBC TAS 202-94
   3) Water Resistance Test, per FBC, TAS 202-94
   4) Large Missile Impact Test per FBC, TAS 201-94
   5) Cyclic Wind Pressure Loading per FBC, TAS 203-94

   along with marked-up drawings and installation diagram of Vistawall FG-5000 and FG-5100 corner storefront system, prepared by Architectural Testing, Inc., Test Report No. **ATI-86107.01-401-18**, specimens: #1R **(E9),** #2 **(E10),** #3 **(E11),** dated 02/26/09, signed and sealed by Joseph A. Reed, P.E.

Manuel Perez, P.E.
Product Control Examiner
NOA No. 09-0721.03
Expiration Date: November 18, 2014
Approval Date: November 18, 2009

4. Test reports on: 1) Air Infiltration Test, per FBC, TAS 202-94
   2) Uniform Static Air Pressure Test, Loading per FBC TAS 202-94
   3) Water Resistance Test, per FBC, TAS 202-94
   4) Large Missile Impact Test per FBC, TAS 201-94
   5) Cyclic Wind Pressure Loading per FBC, TAS 203-94

   along with marked-up drawings and installation diagram of Vistawall FG-5000, wet glazed (Saflex by Solutia & Butacite by DuPont) storefront system, prepared by Architectural Testing, Inc., Test Report No. **ATI-74785.02-401-18**, specimens #1, #2, #3 and #4, dated 08/29/07, signed and sealed by Joseph A. Reed, P.E.

C. CALCULATIONS

1. Anchor verification calculations and structural analysis, complying with FBC-2007, prepared by Tilteco, Inc., dated 7/16/09, signed and sealed by Walter A. Tillit, Jr., P.E. **Complies with ASTM E1300-02/04**

D. QUALITY ASSURANCE

1. Miami Dade Building Code Compliance Office (BCCO).

E. MATERIAL CERTIFICATIONS

1. Notice of Acceptance No. **09-0312.02** issued to E.I. DuPont DeNemours & Co., Inc. for their **"DuPont Butacite® PVB, Interlayer"** dated 05/13/09, expiring on 12/11/10.
2. Notice of Acceptance No. **09-0312.03** issued to E.I. DuPont DeNemours & Co., Inc. for their "**DuPont Sentry Glass® Interlayer**" dated 05/13/09, expiring on 01/14/12.
3. Notice of Acceptance No. **06-0216.06** issued to Solutia Inc. for their "**Saflex IIIG Clear or colored interlayer**" dated 05/04/06, expiring on 05/21/11.
4. Notice of Acceptance No. **08-0520.08** issued to Solutia Inc. for their "**Vanceva Composites Glass Interlayer**" dated 7/17/08, expiring on 12/11/13.

E. STATEMENTS

1. Statement letter of conformance, dated June 12, 2009, signed and sealed by Walter A. Tillit, Jr., P.E.
2. Statement letter of no financial interest, dated June 23, 2009, signed and sealed by Walter A. Tillit, Jr., P.E.
3. Laboratory compliance letter for Test Report No. **ATI-86111.01-401-18**, issued by Architectural Testing, Inc., dated 4/21/09, signed and sealed by Joseph A. Reed, P.E.
4. Laboratory compliance letter for Test Report No. **ATI-89818.01-410-18**, issued by Architectural Testing, Inc., dated 4/27/09, signed and sealed by Joseph A. Reed, P.E.
5. Laboratory compliance letter for Test Report No. **ATI-86107.01-410-18**, issued by Architectural Testing, Inc., dated 4/21/09, signed and sealed by Joseph A. Reed, P.E.

G. OTHERS

1. None

Manuel Perez, P.E.
Product Control Examiner
NOA No. 09-0721.03
Expiration Date: November 18, 2014
Approval Date: November 18, 2009

PRODUCT APPROVAL FOR SERIES FG-5000 FLUSH GLAZED ALUMINUM WINDOW WALL SYSTEM FOR USE IN HURRICANE ZONES REQUIRING LARGE & SMALL MISSILE IMPACT PROTECTION.

GENERAL NOTES:

1. SERIES FG-5000 FLUSH GLAZED ALUMINUM WINDOW WALL SYSTEM LARGE & SMALL MISSILE IMPACT LAMINATED GLASS, SHOWN ON THIS PRODUCT APPROVAL DOCUMENT (P.A.D.) HAS BEEN VERIFIED FOR COMPLIANCE IN ACCORDANCE WITH THE 2007 EDITION OF THE FLORIDA BUILDING CODE.
   SERIES FG-5000 FLUSH GLAZED ALUMINUM WINDOW WALL SYSTEM MAY BE INSTALLED WITHIN HIGH VELOCITY HURRICANE ZONES.
   DESIGN WIND LOADS SHALL BE DETERMINED AS PER SECTION 1620 OF THE ABOVE MENTIONED CODE. IN ORDER TO VERIFY THAT ANCHORS ON THIS P.A.D., AS TESTED, WERE NOT OVERSTRESSED, A 33% INCREASE IN ALLOWABLE STRESS FOR WIND LOADS WAS **NOT** USED IN THEIR ANALYSIS. FASTENERS SPACING TO WOOD HAS BEEN DETERMINED IN ACCORDANCE WITH N.D.S. 2005.
   THIS PRODUCT'S ADEQUACY FOR IMPACT AND CYCLIC RESISTANCE HAS BEEN VERIFIED IN ACCORDANCE WITH SECTION 1626 OF THE ABOVE MENTIONED CODE AS PER PROTOCOLS TAS-201, TAS-202, TAS-203, PER ARCHITECTURAL TESTING LABORATORY REPORTS # 74785.02-401-18, 89818.01-401-18, 86107.01-401-18, 86111.01-401-18 AND AS PER SUBMITTED STRUCTURAL CALCULATIONS, PERFORMED AS PER SECTION 1612 OF THE FLORIDA BUILDING CODE.
2. MAXIMUM DESIGN PRESSURE RATING FOR THIS WINDOW WALL SYSTEM SHALL BE AS SHOWN ON SHEETS 6, 7, 8, 19 AND 20.
3. THIS PRODUCT WILL NOT REQUIRE A HURRICANE PROTECTION DEVICE.
4. THIS PRODUCT IS APPROVED FOR AIR/WATER INFILTRATION (SEE SCHEDULE ON SHEET 7).
5. SERIES FG-5000 FLUSH GLAZED ALUMINUM WINDOW WALL SYSTEM LARGE & SMALL MISSILE IMPACT LAMINATED GLASS SHALL COMPLY WITH SECTIONS 2411.4.1 AND 2411.4.2 OF THE FLORIDA BUILDING CODE.
6. PROVIDE 1/2" MAX. LOAD BEARING SHIM SPACE (TYP.), WHEN ALLOWED BY THIS DRAWING.
7. WOOD BUCKS BY OTHERS, MUST BE ANCHORED PROPERLY TO TRANSFER LOADS TO THE BUILDING STRUCTURE. WOOD BUCKS MUST BE SOUTHERN PINE, G = 0.55.
8. REMAINING COMPONENTS FOR THIS WINDOW WALL SYSTEM SHALL BE AS INDICATED ON BILL OF MATERIALS, SHEET 3 OF THIS DRAWING.
9. ALL ALUMINUM EXTRUSIONS IN CONTACT WITH STEEL, CONCRETE AND WOOD SHALL COMPLY WITH SECTIONS 2003.8.4.2, 2003.8.4.4, 2003.8.5 AND 2003.8.6 OF THE FLORIDA BUILDING CODE, RESPECTIVELY.
10. SHOP DRAWINGS PREPARED BASED ON THIS APPROVAL AND TAKING INTO ACCOUNT THE SPECIFIC JOB CONDITIONS, SHALL BE SUBMITTED TO THE BUILDING OFFICIAL AS PART OF THE PERMIT DOCUMENTS.
11. STRUCTURAL STEEL NOTED ON THESE DRAWINGS AS "EXISTING STEEL BY OTHERS" MUST WITHSTAND THE LOADS IMPOSED BY THE WINDOW WALL SYSTEM.
12. WINDOW WALL SYSTEM MANUFACTURER'S LABEL SHALL BE PLACED ON A READILY VISIBLE LOCATION. ONE LABEL SHALL BE PLACED FOR EVERY UNIT. LABEL SHALL READ AS FOLLOWS:

    Oldcastle Glass®
    Engineered Products
    TERRELL TX.
    MIAMI-DADE COUNTY PRODUCT CONTROL APPROVED.
13. (a) THIS P.A.D. PREPARED BY THIS ENGINEER IS GENERIC AND DOES NOT PROVIDE INFORMATION FOR A SITE SPECIFIC PROJECT; i.e. WHERE THE SITE CONDITIONS DEVIATE FROM THE P.A.D.

    (b) CONTRACTOR TO BE RESPONSIBLE FOR THE SELECTION, PURCHASE AND INSTALLATION INCLUDING LIFE SAFETY OF THIS PRODUCT, BASED ON THIS P.A.D., PROVIDED HE/SHE DOES NOT DEVIATE FROM THE CONDITIONS DETAILED ON THIS DOCUMENT. CONSTRUCTION SAFETY AT SITE IS THE CONTRACTOR'S RESPONSIBILITY.

    (c) THIS P.A.D. WILL BE CONSIDERED INVALID IF ALTERED BY ANY MEANS.

    (d) SITE SPECIFIC PROJECTS SHALL BE PREPARED BY A FLORIDA REGISTERED ENGINEER OR ARCHITECT WHICH WILL BECOME THE ENGINEER OF RECORD (E.O.R.) FOR THE PROJECT AND WHO WILL BE RESPONSIBLE FOR THE PROPER USE OF THE P.A.D. ENGINEER OF RECORD, ACTING AS DELEGATED ENGINEER TO THE P.A.D. ENGINEER, SHALL SUBMIT TO THIS LATTER THE SITE SPECIFIC DRAWINGS FOR REVIEW.

    (e) ORIGINAL P.A.D. SHALL BEAR THE DATE AND ORIGINAL SEAL AND SIGNATURE OF THE PROFESSIONAL ENGINEER OF RECORD THAT PREPARED IT.

INDEX:

SHEET 1: GENERAL NOTES, INDEX AND INSTRUCTIONS
SHEET 2: COMPONENTS
SHEET 3: BILL OF MATERIALS
SHEET 4: ISOMETRIC ELEVATION FOR FG-5000 FLUSH GLAZED ALUMINUM WINDOW WALL SYSTEM.
SHEET 5: TYPICAL GLAZING DETAILS.
SHEET 6: MAXIMUM DESIGN WIND LOAD SCHEDULE FOR A GIVEN GLASS TYPE AND GLASS PANEL DIMENSIONS.
SHEET 7: MAX. DESIGN PRESSURE RATING FOR INTERIOR AND CORNER MULLIONS.
SHEET 8: MAXIMUM PRESSURE RATING FOR MULLION CONNECTIONS
SHEET 9: SILL AND HEAD CONNECTIONS DETAILS FOR INTERIOR MULLIONS AND JAMBS (PLAN VIEWS)
SHEET 10: SILL AND HEAD CONNECTION DETAILS FOR CORNER MULLIONS (PLAN VIEWS)
SHEET 11: HEAD CONNECTION DETAILS (SIDE VIEW)
SHEET 12: HEAD CONNECTION DETAILS (SIDE VIEW) (Continued)
SHEET 13: HORIZONTAL RAIL CONNECTION DETAIL (SIDE VIEW)
SHEET 14: SILL CONNECTION DETAILS (SIDE VIEWS)
SHEET 15: SILL CONNECTION DETAILS (SIDE VIEWS) (Continued)
SHEET 16: SILL CONNECTION DETAILS (SIDE VIEWS) (Continued)
SHEET 17: HORIZONTAL SECTIONS AT INTERIOR AND CORNER MULLION
SHEET 18: HORIZONTAL SECTIONS AT JAMBS
SHEET 19: MAXIMUM PRESSURE RATING FOR JAMBS FASTENED W/ 3/8"ø FASTENERS
SHEET 20: MAXIMUM PRESSURE RATING FOR JAMBS FASTENED W/ 1/2"ø FASTENERS
SHEET 21: CORNER DETAIL AT JAMB
SHEET 22: DOOR JAMB MULLION CONNECTIONS TO WINDOW WALL SYSTEM AT HEAD AND SILL

INSTRUCTIONS:

STEP 1: DETERMINE DESIGN WIND LOAD REQUIREMENTS BASED ON WIND VELOCITY, BUILDING HEIGHT, WIND ZONE, USING APPLICABLE ASCE 7-05 STANDARD.

STEP 2: GO TO SCHEDULE ON SHEET 6 TO DETERMINE MAXIMUM DESIGN LOAD "W" (psf) CAPACITY OF DESIRED GLASS SIZE BASED ON GLASS PANEL DIMENSIONS.

STEP 3: DETERMINE MAXIMUM MULLION SPAN "L"(FT) FOR A GIVEN MULLION EFFECTIVE SPACING "b", ON SCHEDULE ON SHEET 7, AND SELECT ANCHOR OPTION W/ DESIGN PRESSURE RATING NO MOVE THAN DESIGN LOAD SPECIFED IN STEP 1 USING SCHEDULES ON SHEET 8.

STEP 4: USING SCHEDULES ON SHEETS 19 AND 20 SELECT JAMB ANCHOR OPTION W/O ANCHORAGE OR W/ ANCHORAGE WITH DESIGN PRESSURE RATING NO MORE THAN DESIGN LOAD SPECIFIED IN STEP 1.

STEP 5: USING SCHEDULE ON SHEET 13, VERIFY MAXIMUM DESIGN PRESSURE RATING OF HORIZONTALS (IF USED).

STEP 6: THE LOWEST VALUE OF DESIGN PRESSURE RATING RESULTING FROM STEPS 2, 3, 4 AND 5 SHALL APPLY TO THE ENTIRE SYSTEM.

FLORIDA BUILDING CODE (High Velocity Hurricane Zone)

DRAWN BY M.C.V./F.P. | 05/14/09 DATE | 09-074 DRAWING No | SHEET 1 OF 22

SERIES FG-5000 FLUSH GLAZED ALUMINUM WINDOW WALL SYSTEM LARGE & SMALL MISSILE IMPACT LAMINATED GLASS

Oldcastle Glass®
Engineered Products
803 AIRPORT RD. TERRELL TX 75160
PHONE: (972) 551-6100

REV. No	DESCRIPTION	DATE	REV. No	DESCRIPTION	DATE
	GENERAL	10/8/09			

© 2009 TILTECO INC.

TILTECO INC.
TILLIT TESTING & ENGINEERING COMPANY
6355 N.W. 36th. St. Ste. 305, VIRGINIA GARDENS, FLORIDA 33166
Phone : (305)871-1530 . Fax : (305)871-1531
e-mail: tilteco@aol.com
EB-0006719
WALTER A. TILLIT Jr., P.E.
FLORIDA Lic. # 44167

P.E. STAMP

MIAMI-DADE STAMP

Approved as complying with the Florida Building Code
Date Nov. 18, 2009
NOA# 09-0721.03
Miami-Dade Product Control Division
By: Manuel Perez

FG-5000 FLUSH GLAZED ALUMINUM WINDOW WALL SYSTEM COMPONENTS

SCALE : 3/8" = 1"

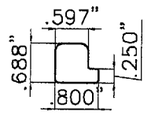

(2) SETTING BLOCK
FG-5199

(3) SPACER GASKET
FG-5185

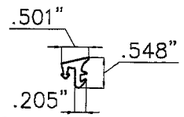

(4) GASKET
FG-1133

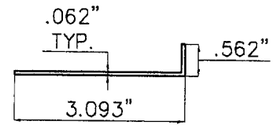

(15) SILL END DAM
FG-5000-FP10

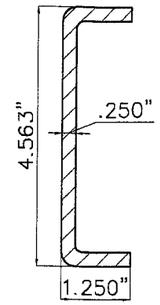

(16) STEEL REINFORCEMENT
FG-5000-PP8

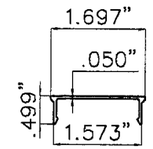

(17) CHANNEL FILLER
@ HEAD & SILL
FG-5113

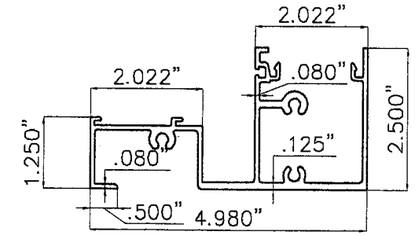

(18) HEAD / SILL
FG-5204

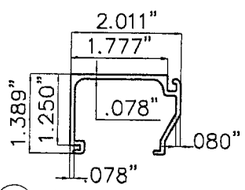

(19) GLASS STOP
FG-5190

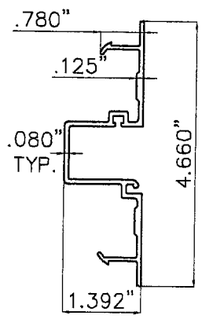

(20) POCKET FILLER
FG-5196

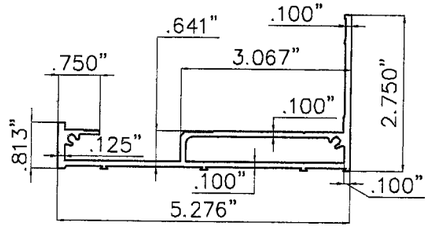

(21) HIGH PERFORMANCE
SILL PAN
FG-5205

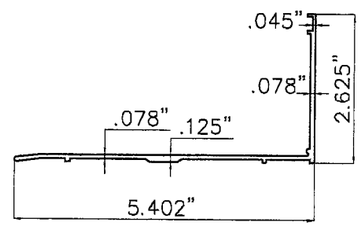

(22) SILL PAN
FG-5180

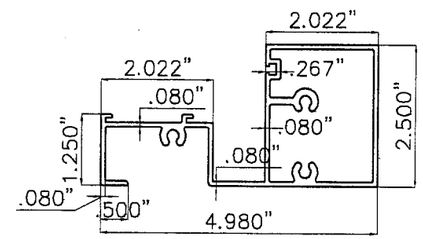

(23) SILL / HEAD
FG-5206

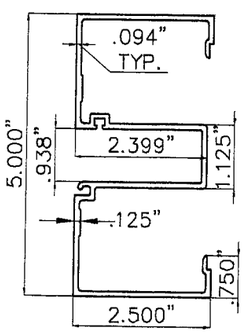

(24) JAMB
FG-5201

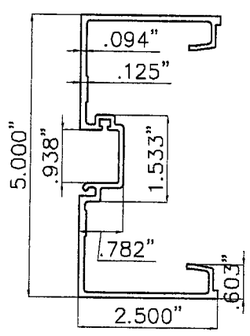

(26) MULLION
FG-5193

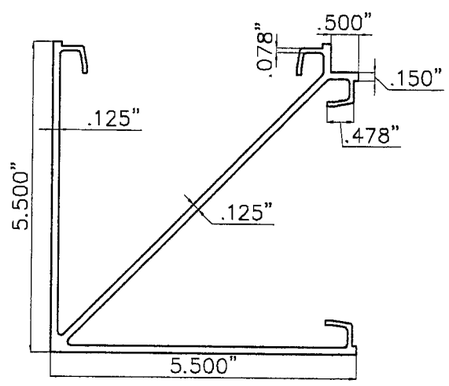

(27) 90 DEGREE CORNER MULLION
FG-5200

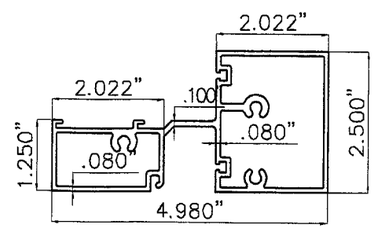

(28) HORIZONTAL
FG-5202

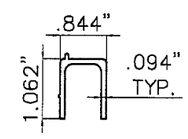

(31) SETTING CHAIR
FG-5192

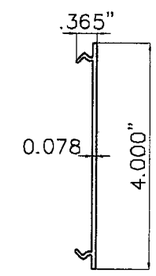

(32) VINYL FILLER
FG-2188

FLORIDA BUILDING CODE (High Velocity Hurricane Zone)

SERIES FG-5000 FLUSH GLAZED ALUMINUM WINDOW WALL SYSTEM LARGE & SMALL MISSILE IMPACT LAMINATED GLASS

Oldcastle Glass®
Engineered Products
803 AIRPORT RD. TERRELL TX 75160
PHONE: (972) 551-6100

REV. No	DESCRIPTION	DATE	REV. No	DESCRIPTION	DATE

DRAWN BY F.P. | 05/14/09 DATE | 09-074 DRAWING No | SHEET 2 OF 22

© 2009 TILTECO INC.

TILTECO INC.
TILLIT TESTING & ENGINEERING COMPANY
6355 N.W. 36th. St, Ste. 305, VIRGINIA GARDENS, FLORIDA 33166
Phone : (305)871-1530 , Fax : (305)871-1531
e-mail: tilteco@aol.com
EB-0006719
WALTER A. TILLIT Jr., P.E.
FLORIDA Lic. # 44167

P.E. STAMP

MIAMI-DADE STAMP

Approved as complying with the Florida Building Code
Date NOV. 18, 2009
NOA# 09-0721.03
Miami Dade Product Control
Division
By

BILL OF MATERIALS

ITEM No.	PART NUMBER	DESCRIPTION	DIMENSIONS	MATERIAL	MANUFACTURER	NOTES
1.	FS-54	PHILLIPS FLAT HEAD MACHINE SCREW UC	#10-24 X ⅜"	STEEL	VARIES	ZINC COATED, PER ASTM B-633.
2.	FG-5199	SETTING BLOCK	.800" X .688 X 4.00	EPDM	EPG	
3.	FG-5185	SPACER GASKET	.250 X .250	EPDM	EPG	
4.	FG-1133	GASKET	.500 X .548	EPDM	EPG	
7.	FS-8	SPLINE ASSEMBLY SCREW	#14 X 1" HHSTS FS-322	STEEL	VARIES	STALGARD COATED, BY ELCO
8.	ANCHOR	SILL ANCHOR SCREW	#14 X 3/4" HHVTEK		ITW/BUILDEX	ZINC COATED, PER ASTM B-633.
9.	ANCHOR	HEAD ANCHOR SCREW	#14 X 1 1/2" HHVTEK		ITW/BUILDEX	ZINC COATED, PER ASTM B-633.
11.	FASTENER	PPH SELF TAPPING SCREW	#10 X 2 1/2"	STEEL	VARIES	ZINC COATED, PER ASTM B-633.
12.	FASTENER	PPH STEEL ATTACHMENT SCREW	#10 X 1"	STEEL	VARIES	ZINC COATED, PER ASTM B-633.
13.	SM-5601	JOINT SEALANT TAPE	.125 X .50 VARIES	ISOCRYL	SCHNEE MOORHEAD	
14.	FG5000-FP-5	WATER DIVERTER	.876 X .54147 X .040	RIGID PVC	Oldcastle Glass EP	
15.	FG-5000-FP10	SILL END DAM	3 1/2 X .562 X 0.062 X 5.00	6063-T6 ALUMINUM	Oldcastle Glass EP	
16.	FG-5000-PP8	STEEL REINFORCEMENT	1.25 X 4.563 X .25	ZINC PAINTED STEEL	VARIES	ASTM A-36
17.	FG-5113	CHANNEL FILLER @ HEAD & SILL	1.697 X .499 X .50	6063-T5	Oldcastle Glass EP	
18.	FG-5204	HEAD / SILL	4.98 X 2.50 X .080	6063-T6	Oldcastle Glass EP	
19.	FG-5190	GLASS STOP	1.777 X 1.25 X .078	6063-T5	Oldcastle Glass EP	
20.	FG-5196	POCKET FILLER	4.660 X 1.392 X .080	6063-T5	Oldcastle Glass EP	
21.	FG-5205	HIGH PERFORMANCE SILL PAN	5.276 X 2.750 X .100	6063-T6	Oldcastle Glass EP	
22.	FG-5180	SILL PAN	5.402 X 2.625 X .078	6063-T6	Oldcastle Glass EP	
23.	FG-5206	SILL / HEAD	4.980 X 2.50 X .078	6063-T6	Oldcastle Glass EP	
24.	FG-5201	JAMB	5.00 X 2.50 X .094	6063-T6	Oldcastle Glass EP	
25.	NOT USED					
26.	FG-5193	MULLION	5.00 X 2.50 X .094	6063-T6	Oldcastle Glass EP	
27.	FG-5200	90 DEGREE CORNER MULLION	5.5 X 5.5 X .125	6063-T6	Oldcastle Glass EP	
28.	FG-5202	HORIZONTAL	4.980 X 2.5 X .080	6063-T6	Oldcastle Glass EP	
29.	995	STRUCTURAL SEALANT	–	SILICONE	DOW CORNING	# 995
30.	795	PERIMETER SEALANT	–	SILICONE	DOW CORNING	# 795
31.	FG-5192	SETTING CHAIR	.844 X 1.062 X .094	6063-T5	Oldcastle Glass EP	
32.	FG-2122	ALUMINUM JAMB FILLER	4.00 X .365 X .078	6063-T6	EPG	
34.	ANCHOR	PFH TEK SCREW	#10 X 2.00	ZINC COATED STEEL	VARIES	ZINC COATED, PER ASTM B-633.

FLORIDA BUILDING CODE (High Velocity Hurricane Zone)

SERIES FG-5000 FLUSH GLAZED ALUMINUM WINDOW WALL SYSTEM LARGE & SMALL MISSILE IMPACT LAMINATED GLASS

Oldcastle Glass®
Engineered Products
803 AIRPORT RD. TERRELL TX 75160
PHONE: (972) 551-6100

DRAWN BY F.P.
05/14/09 DATE
09-074 DRAWING No
SHEET 3 OF 22

REV. No	DESCRIPTION	DATE	REV. No	DESCRIPTION	DATE

© 2009 TILTECO INC.

TILTECO INC.
TILLIT TESTING & ENGINEERING COMPANY
6355 N.W. 36th. St., Ste. 305, VIRGINA GARDENS, FLORIDA 33166
Phone : (305)871-1530 Fax : (305)871-1531
e-mail: tilteco@aol.com
EB-0006719
WALTER A. TILLIT Jr., P.E.
FLORIDA Lic. # 44167

P.E. STAMP

MIAMI-DADE STAMP

Approved as complying with the Florida Building Code
Date NOV. 18 2009
NOA# 09-0721.03
Miami-Dade Product Control
By

ISOMETRIC ELEVATION FOR FG-5000 FLUSH GLAZED ALUM. WINDOW WALL SYSTEM

N.T.S.

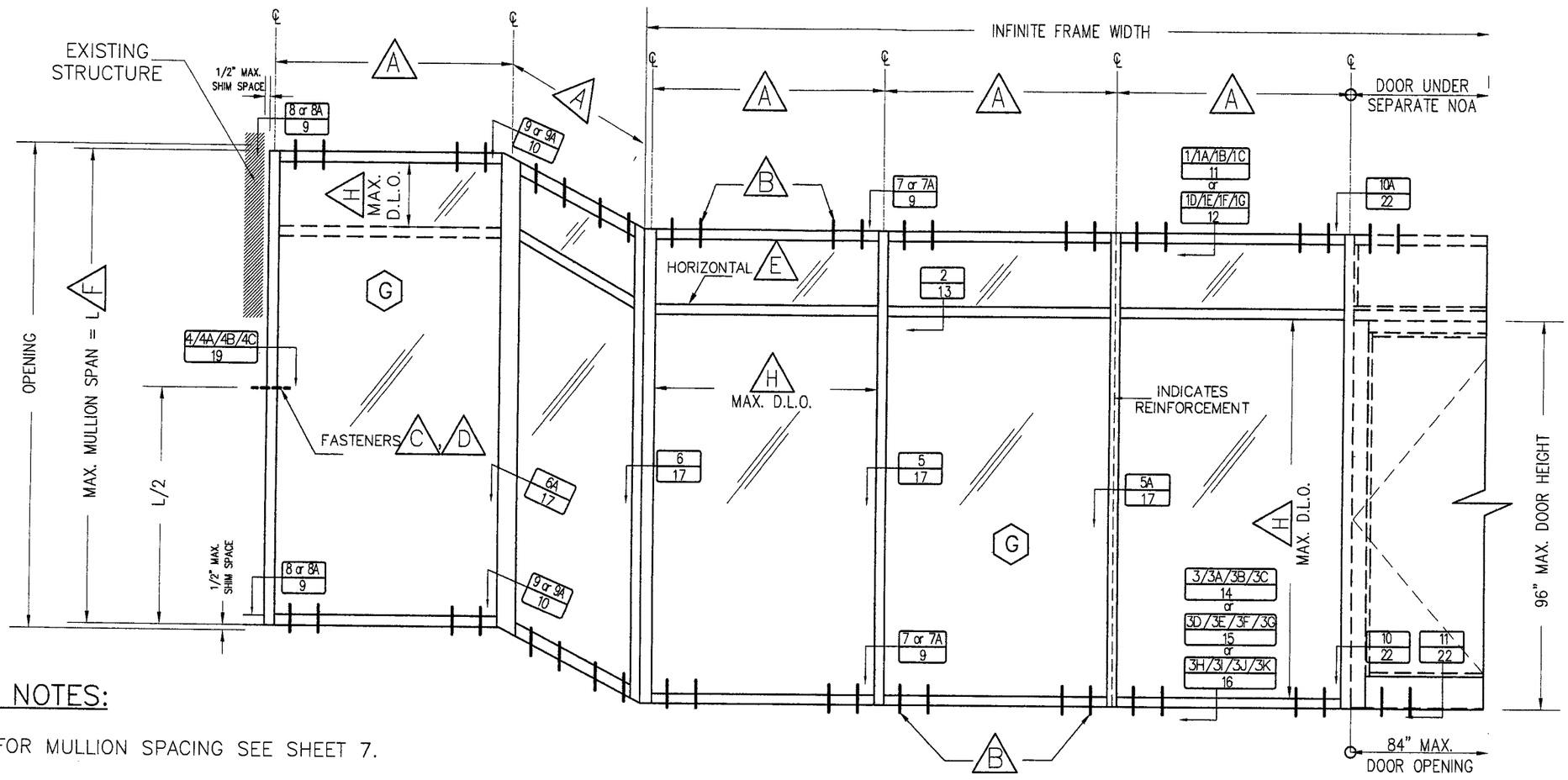

FOOT NOTES:

- (A) FOR MULLION SPACING SEE SHEET 7.
- (B) FOR HEAD AND SILL FASTENERS QUANTITY, TYPES AND SPECS SEE SHEET 8.
- (C) FOR JAMB FASTENERS QUANTITY, TYPES AND SPECS SEE SHEET 19.
- (D) SEE SHEET 7 FOR MAXIMUM PRESSURE RATING FOR JAMB NOT CONNECTED TO EXISTING STRUCTURE AND SEE SHEETS 19 & 20 FOR MAXIMUM PRESSURE RATING FOR JAMB CONNECTED TO EXISTING STRUCTURE.
- (E) USE OF HORIZONTALS (SEE SECTION 2/13) IS LIMITED TO ±70 psf DESIGN LOAD, OR AS LIMITED BY SCHEDULE ON SHEET 13 AND FOR 5'-0" MAX. MULLION SPACING.
- (F) FOR MAXIMUM MULLION SPAN SEE SHEET 7.
- (G) FOR GLAZING DETAILS AND GLASS SCHEDULE SEE SHEET 5.
- (H) FOR MAXIMUM D.L.O. SEE SCHEDULE ON SHEET 6.

FLORIDA BUILDING CODE (High Velocity Hurricane Zone)

SERIES FG-5000 FLUSH GLAZED ALUMINUM WINDOW WALL SYSTEM LARGE & SMALL MISSILE IMPACT LAMINATED GLASS

Oldcastle Glass®
Engineered Products
803 AIRPORT RD. TERRELL TX 75160
PHONE: (972) 551-6100

DRAWN BY	05/14/09 DATE	09-074 DRAWING No	SHEET 4 OF 22
M.C.V.			

REV. No	DESCRIPTION	DATE	REV. No	DESCRIPTION	DATE

© 2009 TILTECO INC.

TILTECO INC.
TILLIT TESTING & ENGINEERING COMPANY
6355 N.W. 36th. St., Ste. 305, VIRGINIA GARDENS, FLORIDA 33166
Phone : (305)871-1530 Fax : (305)871-1531
e-mail: tilteco@aol.com
EB-0006719
WALTER A. TILLIT Jr., P.E.
FLORIDA Lic. # 44167

P.E. STAMP

MIAMI-DADE STAMP

Approved as complying with the Florida Building Code
Date Nov. 18 2009
NOA# 09-0721.03
Miami-Dade Product Control
By

TYPICAL GLAZING DETAILS

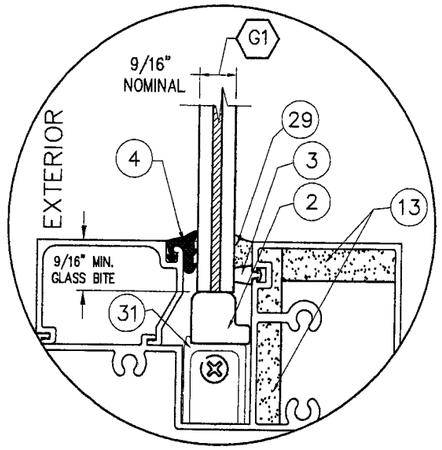

GLASS TYPE G1

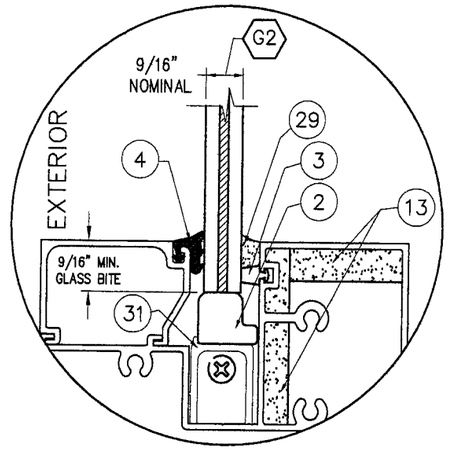

GLASS TYPE G2

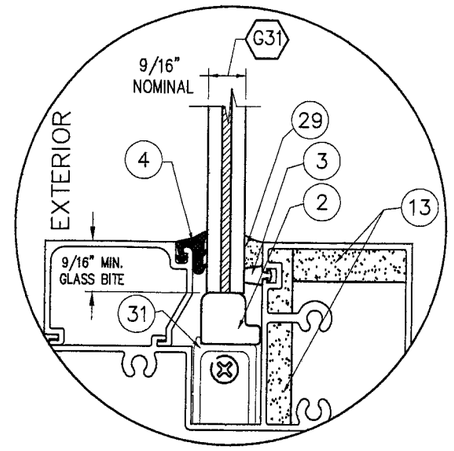

GLASS TYPE G31

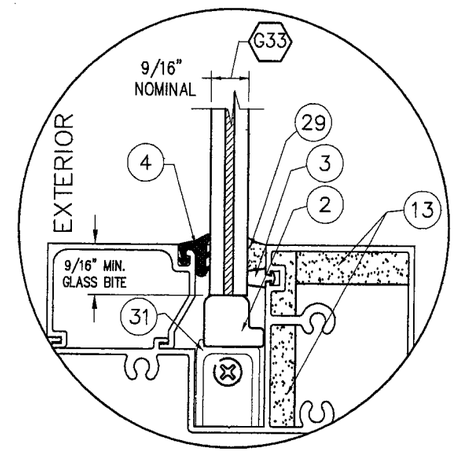

GLASS TYPE G33

GLASS SCHEDULE

GLASS LABEL	GLASS COMPOSITION	MANUFACTURER NAME	MAXIMUM D.L.O.	NOA'S #
G1	9/16" OVERALL THICKNESS LAMINATED GLASS CONSISTING OF TWO 1/4" HS GLASS, AND A 0.090" BUTACITE PVB INTERLAYER	DUPONT	SEE SCHEDULE ON SHEET 6	05-1208.02
G2	9/16" OVERALL THICKNESS LAMINATED GLASS CONSISTING OF TWO 1/4" HS GLASS, AND A 0.090" SENTRYGLAS PLUS INTERLAYER	DUPONT	SEE SCHEDULE ON SHEET 6	07-1116.04
G31	9/16" OVERALL THICKNESS LAMINATED GLASS CONSISTING OF TWO 1/4" HS GLASS, AND A 0.090" SAFLEX PVB INTERLAYER	SOLUTIA	SEE SCHEDULE ON SHEET 6	06-0216.06
G33	9/16" OVERALL THICKNESS LAMINATED GLASS CONSISTING OF TWO 1/4" HS GLASS, AND A 0.075" VANCEVA/STORMGLASS COMPOSITE INTERLAYER	SOLUTIA	SEE SCHEDULE ON SHEET 6	08-0520.08/ 08-1118.07

FLORIDA BUILDING CODE (High Velocity Hurricane Zone)

SERIES FG-5000 FLUSH GLAZED ALUMINUM WINDOW WALL SYSTEM LARGE & SMALL MISSILE IMPACT LAMINATED GLASS

Oldcastle Glass®
Engineered Products
803 AIRPORT RD. TERRELL TX 75160
PHONE: (972) 551-6100

REV. No	DESCRIPTION	DATE	REV. No	DESCRIPTION	DATE

DRAWN BY F.P. | 05/14/09 DATE | 09-074 DRAWING No | SHEET 5 OF 22

© 2009 TILTECO INC.

TILTECO INC.
TILLIT TESTING & ENGINEERING COMPANY
6355 N.W. 36th. St. Ste. 305, VIRGINIA GARDENS, FLORIDA 33166
Phone : (305)871-1530 . Fax : (305)871-1531
e-mail: tilteco@aol.com
EB-0006719
WALTER A. TILLIT Jr., P.E.
FLORIDA Lic. # 44167

P.E. STAMP

10/23/09

MIAMI-DADE STAMP

Approved as complying with the Florida Building Code
Date Nov. 18, 2009
NOA# 09-0721.03
Miami-Dade Product Control
Division
By

MAXIMUM DESIGN WIND LOAD "W" (psf) SCHEDULE FOR A GIVEN GLASS TYPE AND GLASS PANEL DIMENSIONS "b" (in) x "a" (in).

GLASS TYPE G1 & G31

DIMENSION "b"	DIMENSION "a"	MAXIMUM DESIGN LOAD "W"(psf)
24"	from 24" to 115"	±65.0
30"	from 30" to 115"	±65.0
36"	from 36" to 115"	±65.0
41.75"	from 41.75" to 102.5"	±65.0
48"	from 48" to 89"	±56.5
54"	from 54 to 79"	±50.3
57.5"	from 57.5" to 74"	±47.0

GLASS TYPE G2

DIMENSION "b"	DIMENSION "a"	MAXIMUM DESIGN LOAD "W"(psf)
24"	from 24" to 115"	±90.0
30"	from 30" to 115"	±90.0
36"	from 36" to 115"	±90.0
42"	from 42" to 115"	±90.0
47.5"	from 47.5" to 115"	±90.0
54"	from 54 to 101"	±79.2
57.5"	from 57.5" to 95"	±74.3

GLASS TYPE G33

DIMENSION "b"	DIMENSION "a"	MAXIMUM DESIGN LOAD "W"(psf)
24"	from 24" to 115"	+70, -80
30"	from 30" to 115"	+70, -80
36"	from 36" to 115"	+70, -80
42"	from 42" to 115"	+70, -80
48"	from 48 to 115"	+70, -80
54"	from 54 to 102"	+70, -80
57.5"	from 57.5" to 96"	+70, -80

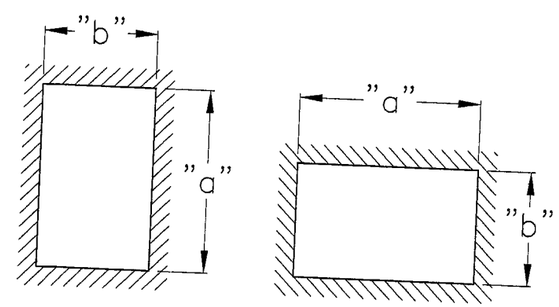

GLASS PANEL DIMENSIONS LEGEND

DIMENSION "b" & "a" REFER TO D.L.O.

NOTES:
1. SEE SHEET 5 FOR GLAZING DETAILS AND GLASS SCHEDULE.

FLORIDA BUILDING CODE (High Velocity Hurricane Zone)

SERIES FG-5000 FLUSH GLAZED ALUMINUM WINDOW WALL SYSTEM LARGE & SMALL MISSILE IMPACT LAMINATED GLASS

Oldcastle Glass®
Engineered Products
803 AIRPORT RD. TERRELL TX 75160
PHONE: (972) 551-6100

REV. No	DESCRIPTION	DATE	REV. No	DESCRIPTION	DATE

DRAWN BY L.G.
05/14/09 DATE
09-074 DRAWING No
SHEET 6 OF 22

© 2009 TILTECO INC.

TILTECO INC.
TILLIT TESTING & ENGINEERING COMPANY
6355 N.W. 36th. St., Ste. 305, VIRGINIA GARDENS, FLORIDA 33166
Phone : (305)871-1530 . Fax : (305)871-1531
e-mail: tilteco@aol.com
EB-0006719
WALTER A. TILLIT Jr., P.E.
FLORIDA Lic. # 44167

P.E. STAMP

MIAMI-DADE STAMP

Approved as complying with the Florida Building Code
Date Nov. 18, 2009
NOA# 09-0721.03
Miami-Dade Product Control
By

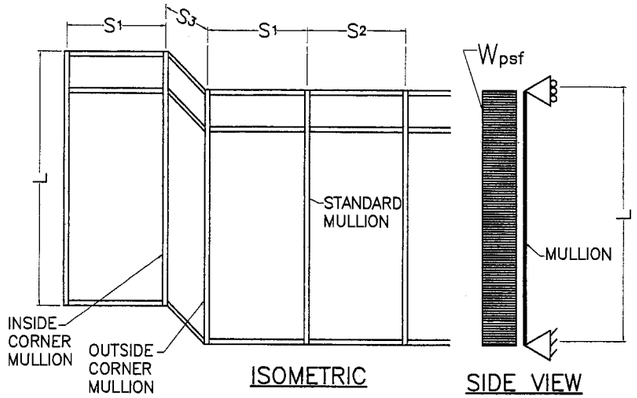

L = MULLION SPAN

EFFECTIVE SPACING $b = \frac{S_1 + S_2}{2}$
(FOR STANDARD MULLION)

EFFECTIVE SPACING $b = \frac{S_1 + S_3}{2}$
(FOR CORNER MULLION)

CASE DEFINITIONS

CASE 1 : UNREINFORCED STANDARD MULLION A (SEE DET. 5/18)

CASE 2 : REINFORCED STANDARD MULLION B FULL HEIGHT. (SEE DET. 5A/18)

CASE 3 : CORNER MULLION C FULL HEIGHT. (SEE DET. 6/18 & 6A/18) (EITHER INSIDE OR OUTSIDE)

* MAXIMUM DESIGN PRESSURE RATING FOR STANDARD & CORNER MULLION WILL AUTOMATICALLY QUALIFY DESIGN PRESSURE RATINGS FOR JAMBS W/ ANCHORAGE FOR ANY GIVEN MULLION SPACING. FOR MAX. JAMB SPAN W/O ANCHORAGE SEE SCHEDULE ON SHEET 19. JAMB ANCHORAGE (WHEN USED) SHALL BE PERFORMED AT MID HEIGHT OF JAMBS.

** DOOR JAMB MULLION SHALL ONLY BE USED FOR DESIGN LOADS UP TO ±80 psf.

A	CASE:1 MULLION (26) + (20)	Ix= 5.580 in4 Sx= 2.227 in3
AIR/WATER INFILTRATION IS 9.75 psf		IN TERMS OF ALUM.

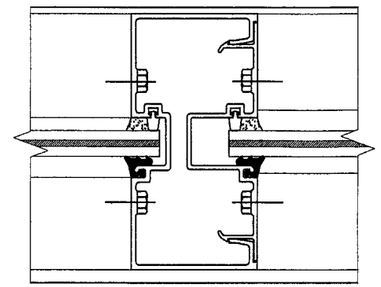

B	CASE:2 MULLION (26) + (20) W/ STEEL CHANNEL (16)	Ix= 18.180 in4 Sx= 7.266 in3
AIR/WATER INFILTRATION IS 15 psf		IN TERMS OF ALUM.

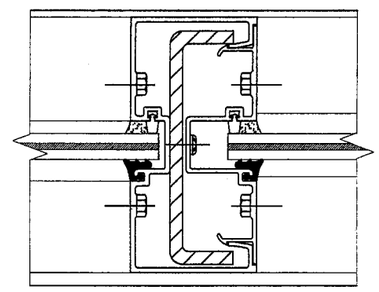

C	CASE:3 OUTSIDE/INSIDE CORNER MULLION (27) + (20)	Ix= 17.141 in4 Sx= 4.336 in3
AIR/WATER INFILTRATION IS 10.5 psf		IN TERMS OF ALUM.

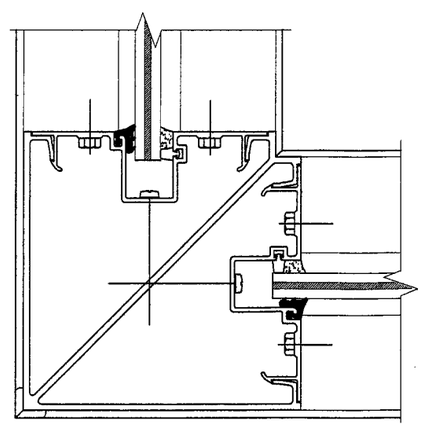

MAXIMUM DESIGN PRESSURE RATING FOR STANDARD & CORNER MULLIONS *
MAXIMUM MULLION SPAN "L"(FT) SCHEDULE FOR A GIVEN DESIGN WIND LOAD "W" (psf) AND A GIVEN MULLION EFFECTIVE SPACING "b" **

MAXIMUM DESIGN LOAD "W±" (psf)	EFFECTIVE SPACING "b" (Ft-in)	CASE 1 STANDARD MULLION A "L" (Ft-in)	CASE 2 REINFORCED MULLION B "L" (Ft-in)	CASE 3 CORNER MULLION C "L" (Ft-in)
60.0	3 '- 6 "	9 '- 0 "	10 '- 0 "	10 '- 0 "
	4 '- 0 "	8 '- 10 "	10 '- 0 "	10 '- 0 "
	4 '- 6 "	8 '- 2 "	10 '- 0 "	10 '- 0 "
	5 '- 0 "	7 '- 4 "	10 '- 0 "	10 '- 0 "
65.0	3 '- 6 "	9 '- 0 "	10 '- 0 "	10 '- 0 "
	4 '- 0 "	8 '- 5 "	10 '- 0 "	10 '- 0 "
	4 '- 6 "	7 '- 6 "	10 '- 0 "	10 '- 0 "
	5 '- 0 "	6 '- 9 "	10 '- 0 "	10 '- 0 "
70.0	3 '- 6 "	-	10 '- 0 "	10 '- 0 "
	4 '- 0 "	-	10 '- 0 "	10 '- 0 "
	4 '- 6 "	-	10 '- 0 "	10 '- 0 "
	5 '- 0 "	-	10 '- 0 "	10 '- 0 "
75.0	3 '- 6 "	-	10 '- 0 "	10 '- 0 "
	4 '- 0 "	-	10 '- 0 "	10 '- 0 "
	4 '- 6 "	-	10 '- 0 "	10 '- 0 "
	5 '- 0 "	-	10 '- 0 "	10 '- 0 "
76.0	3 '- 6 "	-	10 '- 0 "	10 '- 0 "
	4 '- 0 "	-	10 '- 0 "	10 '- 0 "
	4 '- 6 "	-	10 '- 0 "	10 '- 0 "
	5 '- 0 "	-	9 '- 11 "	10 '- 0 "
80.0	3 '- 6 "	-	10 '- 0 "	10 '- 0 "
	4 '- 0 "	-	10 '- 0 "	10 '- 0 "
	4 '- 6 "	-	10 '- 0 "	10 '- 0 "
	5 '- 0 "	-	9 '- 5 "	10 '- 0 "
85.0	3 '- 6 "	-	10 '- 0 "	-
	4 '- 0 "	-	10 '- 0 "	-
	4 '- 6 "	-	9 '- 11 "	-
	5 '- 0 "	-	8 '- 11 "	-
90.0	3 '- 6 "	-	10 '- 0 "	-
	4 '- 0 "	-	10 '- 0 "	-
	4 '- 2 "	-	10 '- 0 "	-
	4 '- 6 "	-	9 '- 4 "	-
	5 '- 0 "	-	8 '- 5 "	-

FLORIDA BUILDING CODE (High Velocity Hurricane Zone)

SERIES FG-5000 FLUSH GLAZED ALUMINUM WINDOW WALL SYSTEM LARGE & SMALL MISSILE IMPACT LAMINATED GLASS

DRAWN BY L.G.

05/14/09 DATE

09-074 DRAWING No

SHEET 7 OF 22

Oldcastle Glass® Engineered Products
803 AIRPORT RD. TERRELL TX 75160
PHONE: (972) 551-6100

REV. No	DESCRIPTION	DATE
	Ix & Sx ADDED	10/28/09

REV. No	DESCRIPTION	DATE

© 2009 TILTECO INC.

TILTECO INC.
TILLIT TESTING & ENGINEERING COMPANY
6355 N.W. 36th. St. Ste. 305, VIRGINIA GARDENS, FLORIDA 33166
Phone : (305)871-1530 Fax : (305)871-1531
e-mail: tilteco@aol.com
EB-0006719
WALTER A. TILLIT Jr., P.E.
FLORIDA Lic. # 44167

P.E. STAMP

10/23/09

MIAMI-DADE STAMP

Approved as complying with the Florida Building Code
Date NOV 18 2009
NOAF 09-0721.03
Miami Dade Product Control Division
By

MAXIMUM PRESSURE RATING FOR MULLION CONNECTIONS

MAXIMUM MULLION SPAN	EFFECTIVE SPACING	MAXIMUM DESIGN LOAD W (psf)					
		POURED CONCRETE (Min. fc = 3ksi) SUBSTRATE			1/4" Min. THK ASTM A-36 STEEL SUBSTRATE	DOUBLE BUCK 3" Min. THK. (G=0.55) WOOD SUBSTRATE	DOUBLE BUCK 3" Min. THK. (G=0.55) WOOD SUBSTRATE
		FASTENERS TYPES			FASTENERS	FASTENERS	FASTENERS
"L" (Ft-in)	"b" (Ft-in)	A (3/8"ø)	B (3/8"ø)	C (3/8"ø)	D (3/8"ø)	E (3/8"ø)	E' (1/2"ø)
		4 Required	4 Required	4 Required	4 Required	10 Required	10 Required
9 '- 0 " or less	3 '- 6 "	90.0	90.0	90.0	90.0	90.0	90.0
	4 '- 0 "	90.0	90.0	90.0	90.0	90.0	90.0
	4 '- 6 "	90.0	90.0	90.0	90.0	90.0	90.0
	5 '- 0 "	90.0	90.0	90.0	90.0	90.0	90.0
9 '- 6 "	3 '- 6 "	90.0	90.0	90.0	90.0	90.0	90.0
	4 '- 0 "	90.0	90.0	90.0	90.0	90.0	90.0
	4 '- 6 "	90.0	90.0	90.0	90.0	90.0	90.0
	5 '- 0 "	90.0	90.0	90.0	90.0	89.5	90.0
10 '- 0 "	3 '- 6 "	90.0	90.0	90.0	90.0	90.0	90.0
	4 '- 0 "	90.0	90.0	90.0	90.0	90.0	90.0
	4 '- 6 "	90.0	90.0	90.0	90.0	90.0	90.0
	5 '- 0 "	90.0	90.0	87.5	90.0	85.0	90.0

FASTENERS TYPES

A - 3/8"Ø HILTI KWIK BOLT TZ ANCHOR W/ 2" Min. EMBEDMENT INTO 6" Min. THICK POURED CONCRETE (Min. f'c = 3 ksi) BEYOND ANY FINISH MATERIAL, W/ 4" MIN. EDGE DISTANCE.

B - 3/8"Ø POWER FASTENERS TAPPER ANCHOR W/ 1 3/4" Min. EMBEDMENT INTO POURED CONCRETE (Min. f'c = 3 ksi) BEYOND ANY FINISH MATERIAL, W/ 4 1/2" MIN. EDGE DISTANCE.

C - 3/8"Ø HILTI HUS-H SCREW ANCHOR W/ 2" Min. EMBEDMENT INTO POURED CONCRETE (Min. f'c = 3 ksi) BEYOND ANY FINISH MATERIAL, W/ 5" MIN. EDGE DISTANCE.

D - 3/8"Ø TYPE "F" BOLT TO 1/4" Min. THK. ASTM A-36 STEEL W/ 3/4" MIN. EDGE DISTANCE OR 3/8"Ø -16 SAE GRADE 5 GALVANIZED STEEL HHB THRU BOLT W/ NUT & LOCK WASHER.

E - 3/8"Ø LAG SCREWS TO DOUBLE BUCK (G=0.55) W/ 3" Min. PENETRATION INTO WOOD W/ 1 1/2" MIN. EDGE DISTANCE.

E' - 1/2"Ø LAG SCREWS TO DOUBLE BUCK (G=0.55) 3" Min. PENETRATION INTO WOOD W/ 2" MIN. EDGE DISTANCE.

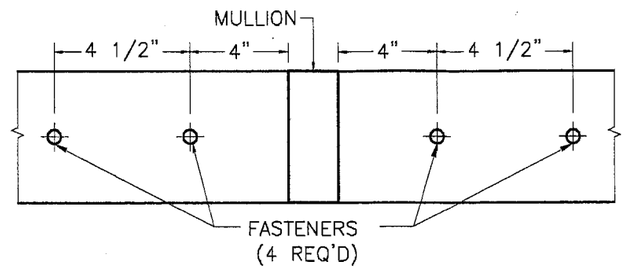

EXTERIOR

SCHEMATIC CONCRETE & STEEL CONNECTION DETAIL *
(AT STANDARD MULLION)

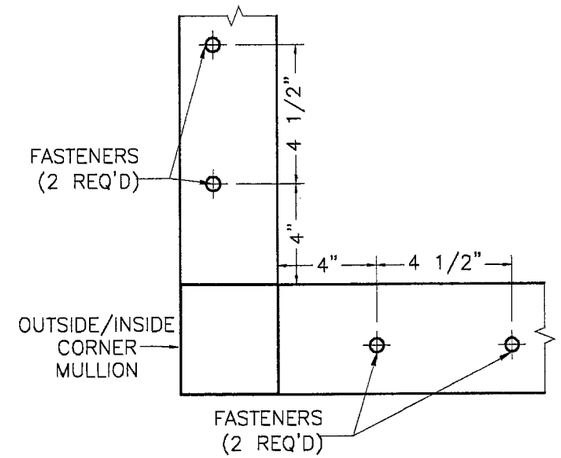

EXTERIOR

SCHEMATIC CONCRETE & STEEL CONNECTION DETAIL *
(AT OUTSIDE/INSIDE CORNER MULLION)

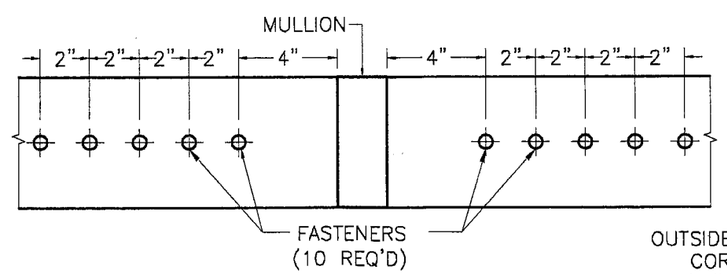

EXTERIOR

SCHEMATIC WOOD CONNECTION DETAIL *
(AT STANDARD MULLION)

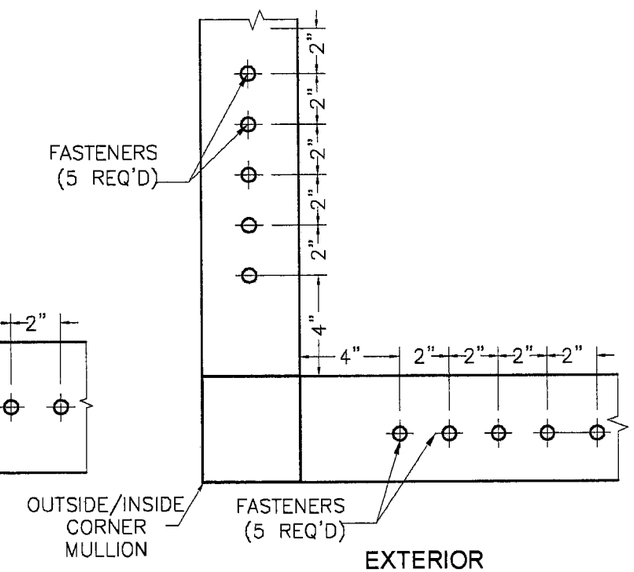

EXTERIOR

SCHEMATIC WOOD CONNECTION DETAIL *
(AT OUTSIDE/INSIDE CORNER MULLION)

* SEE CONNECTION DETAILS ON SHEETS 9,10 & 23 FOR FASTENERS QUANTITY & LOCATIONS AT MULLION.

FLORIDA BUILDING CODE (High Velocity Hurricane Zone)

SERIES FG-5000 FLUSH GLAZED ALUMINUM WINDOW WALL SYSTEM LARGE & SMALL MISSILE IMPACT LAMINATED GLASS

DRAWN BY L.G./M.C.V. | 05/14/09 DATE | 09-074 DRAWING No | SHEET 8 OF 22

Oldcastle Glass® Engineered Products
803 AIRPORT RD. TERRELL, TX 75160
PHONE: (972) 551-6100

REV. No	DESCRIPTION	DATE	REV. No	DESCRIPTION	DATE

© 2009 TILTECO INC.

TILTECO INC.
TILLIT TESTING & ENGINEERING COMPANY
6355 N.W. 36th. St., Ste. 305, VIRGINIA GARDENS, FLORIDA 33166
Phone : (305)871-1530 . Fax : (305)871-1531
e-mail: tilteco@aol.com
EB-0006719
WALTER A. TILLIT Jr., P.E.
FLORIDA Lic. # 44167

P.E. STAMP

MIAMI-DADE STAMP

Approved for receiving with the Florida Building Code
Date Nov. 18, 2009
NOA 09-0721.03
Miami-Dade Product Control

SILL AND HEAD CONNECTION DETAILS FOR STANDARD MULLIONS AND JAMBS (PLAN VIEWS)

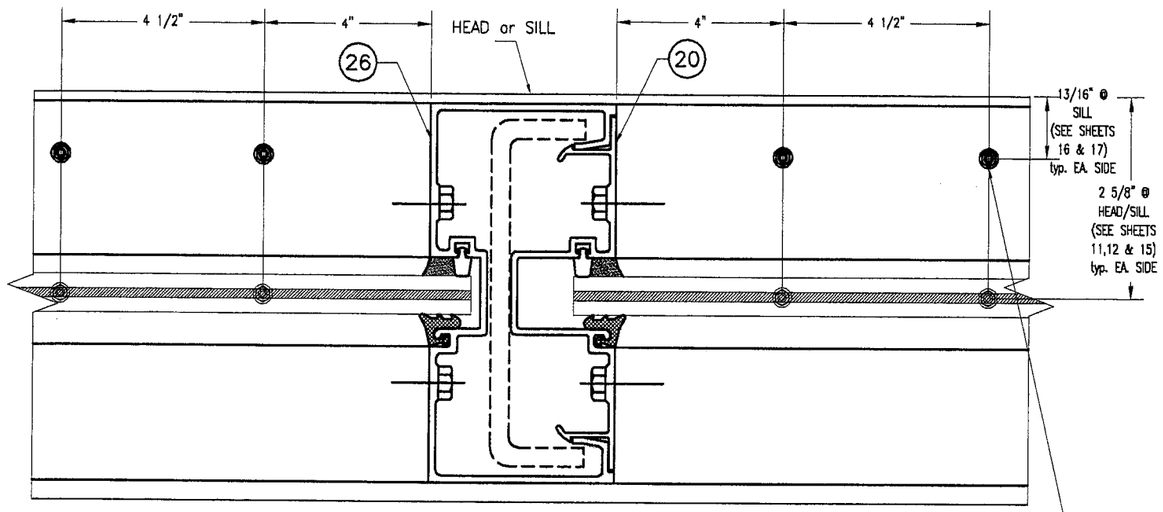

7
CONNECTION AT STANDARD MULLION

CONNECTION DETAIL APPLICABLE TO POURED CONCRETE OR STEEL

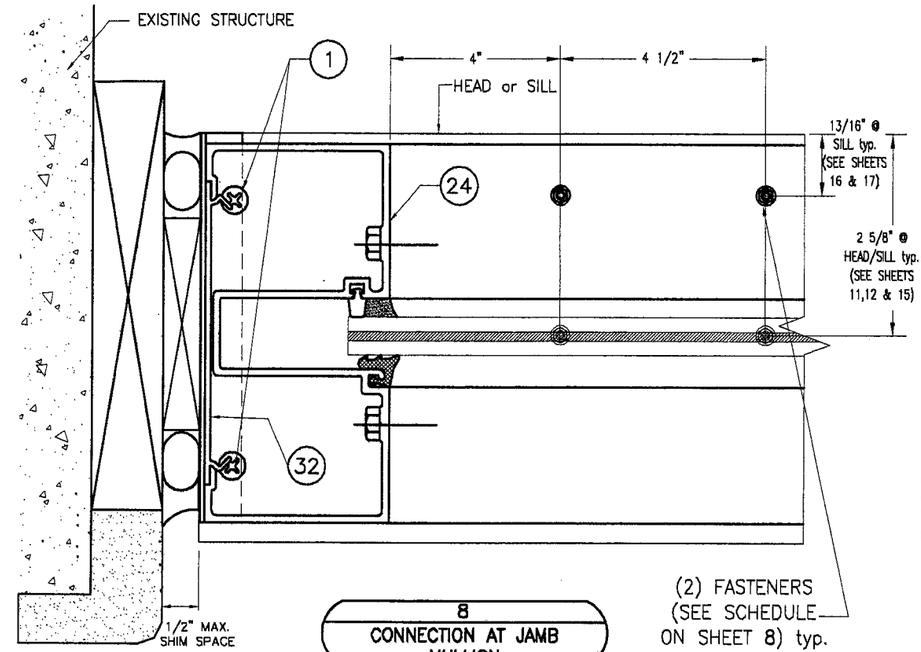

8
CONNECTION AT JAMB MULLION

CONNECTION DETAIL APPLICABLE TO POURED CONCRETE OR STEEL (SIMILAR)

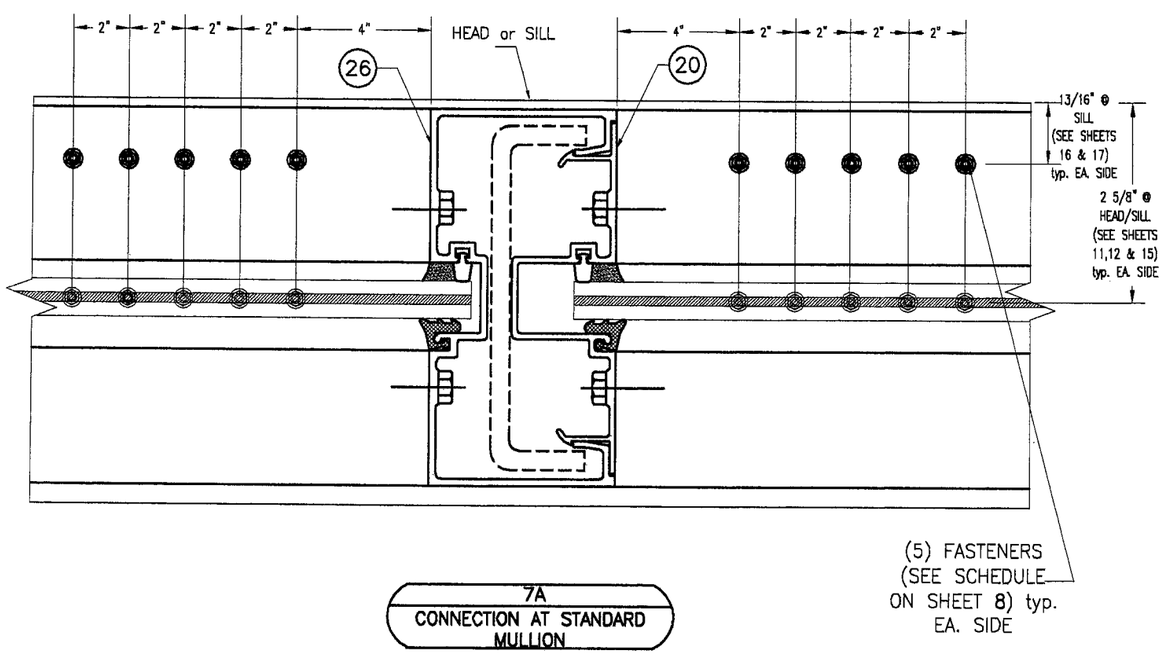

7A
CONNECTION AT STANDARD MULLION

CONNECTION DETAIL APPLICABLE TO WOOD ONLY

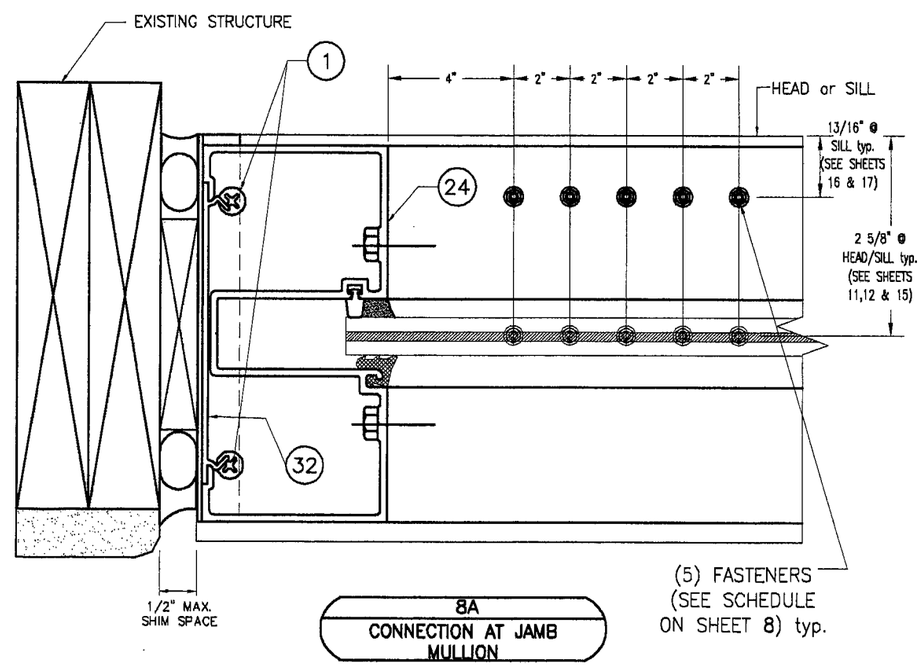

8A
CONNECTION AT JAMB MULLION

CONNECTION DETAIL APPLICABLE TO WOOD ONLY

FLORIDA BUILDING CODE (High Velocity Hurricane Zone)

SERIES FG-5000 FLUSH GLAZED ALUMINUM WINDOW
WALL SYSTEM LARGE & SMALL MISSILE
IMPACT LAMINATED GLASS

Oldcastle Glass®
Engineered Products
803 AIRPORT RD. TERRELL, TX 75160
PHONE: (972) 551-6100

REV. No	DESCRIPTION	DATE	REV. No	DESCRIPTION	DATE

DRAWN BY M.C.V.
05/14/09 DATE
09-074 DRAWING No
SHEET 9 OF 22

© 2009 TILTECO INC.

TILTECO INC.
TILLIT TESTING & ENGINEERING COMPANY
6355 N.W. 36th. St., Ste. 305, VIRGINIA GARDENS, FLORIDA 33166
Phone : (305)871-1530 . Fax : (305)871-1531
e-mail: tilteco@aol.com
EB-0006719
WALTER A. TILLIT Jr., P.E.
FLORIDA Lic. # 44167

P.E. STAMP

MIAMI-DADE STAMP

Approved as complying with the Florida Building Code
Date Nov 18 2009
NOA# 09-0721.03
Miami Dade Product Control Division
By

SILL AND HEAD CONNECTION DETAILS FOR CORNER MULLIONS (PLAN VIEWS)

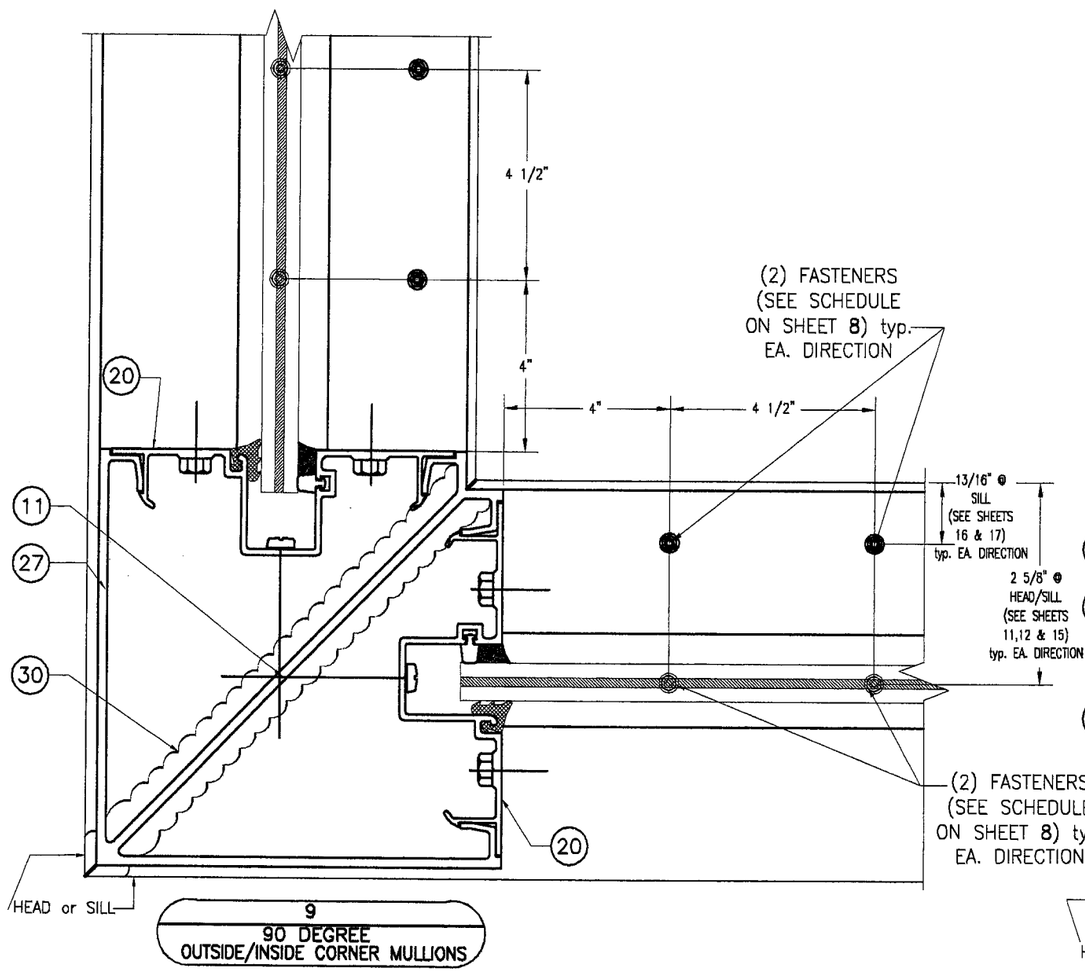

CONNECTION DETAIL APPLICABLE TO POURED CONCRETE OR STEEL

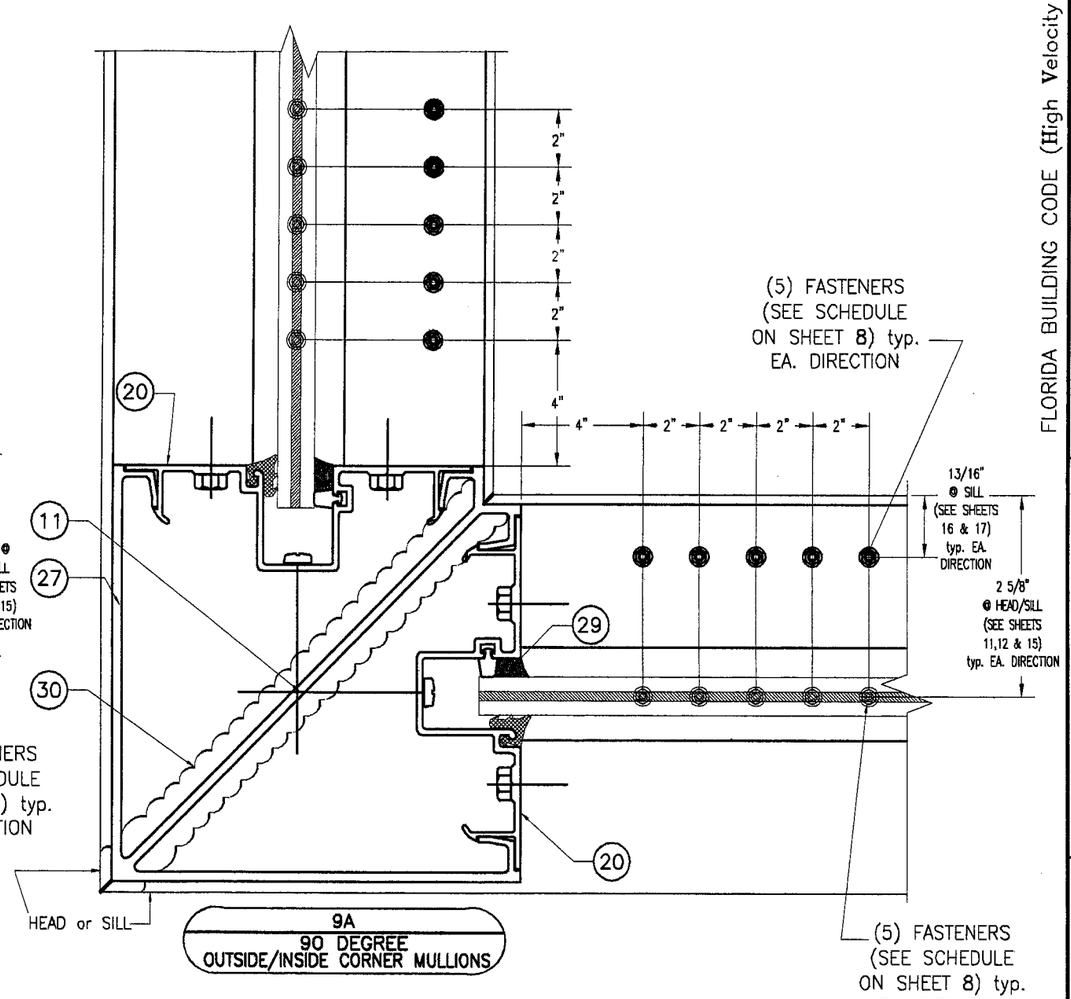

CONNECTION DETAIL APPLICABLE TO WOOD ONLY

FLORIDA BUILDING CODE (High Velocity Hurricane Zone)

SERIES FG-5000 FLUSH GLAZED ALUMINUM WINDOW
WALL SYSTEM LARGE & SMALL MISSILE
IMPACT LAMINATED GLASS

Oldcastle Glass®
Engineered Products
803 AIRPORT RD. TERRELL TX 75160
PHONE: (972) 551-6100

REV. No	DESCRIPTION	DATE	REV. No	DESCRIPTION	DATE

DRAWN BY M.C.V. | 05/14/09 DATE | 09-074 DRAWING No | SHEET 10 OF 22

© 2009 TILTECO INC.

TILTECO INC.
TILLIT TESTING & ENGINEERING COMPANY
6355 N.W. 36th. St., Ste. 305, VIRGINIA GARDENS, FLORIDA 33166
Phone : (305)871-1530 . Fax : (305)871-1531
e-mail: tilteco@aol.com
EB-0006719
WALTER A. TILLIT Jr., P.E.
FLORIDA Lic. # 44167

P.E. STAMP

10/23/09

MIAMI-DADE STAMP

Approved as complying with the
Florida Building Code
Date Nov. 18, 2009
NOA# 09-0121.03
Miami Dade Product Control
Division
By Manuel Perez

HEAD CONNECTION DETAILS (SIDE VIEW)

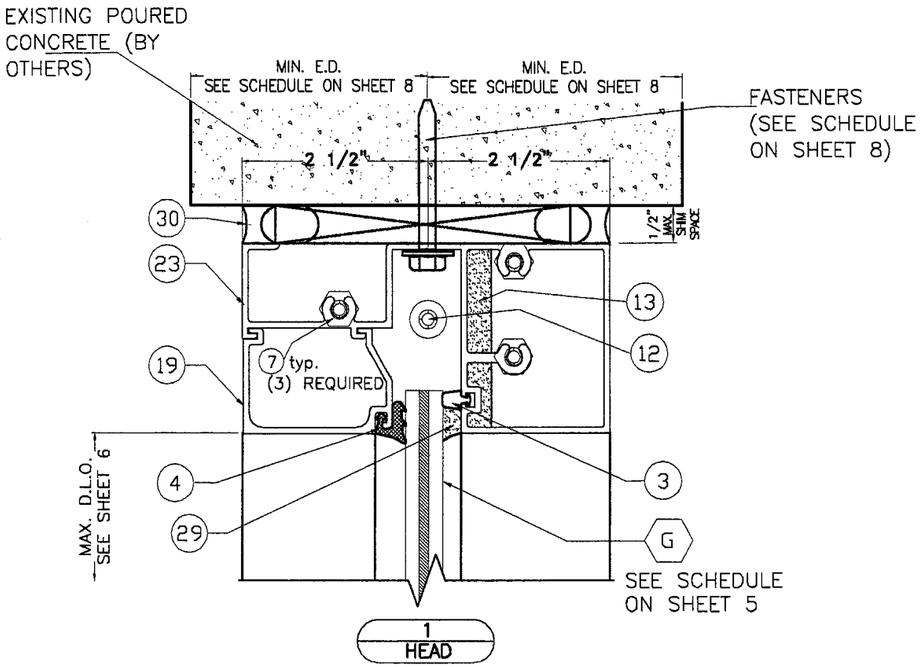

1
HEAD

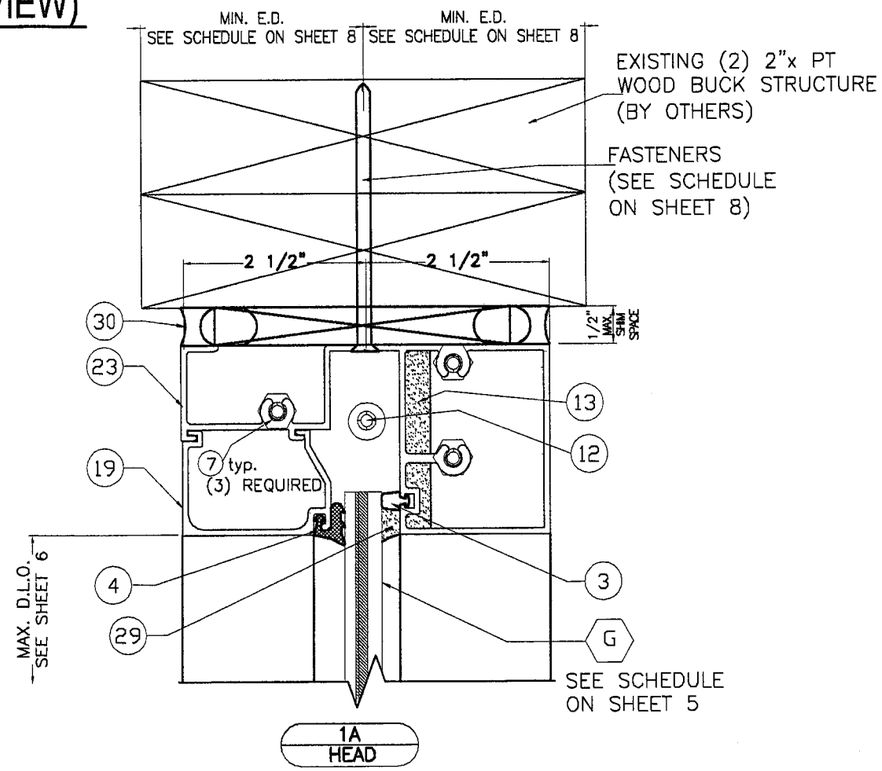

1A
HEAD

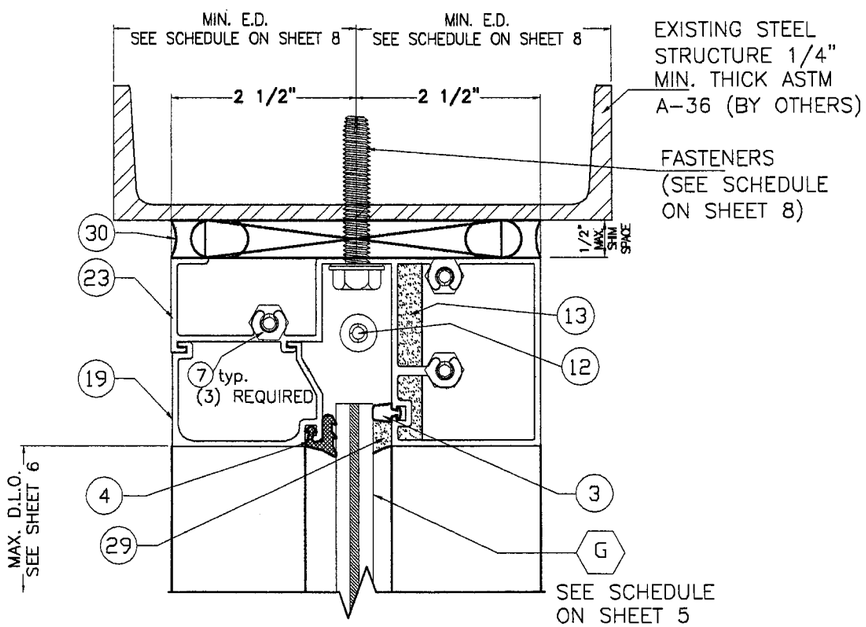

1B
HEAD

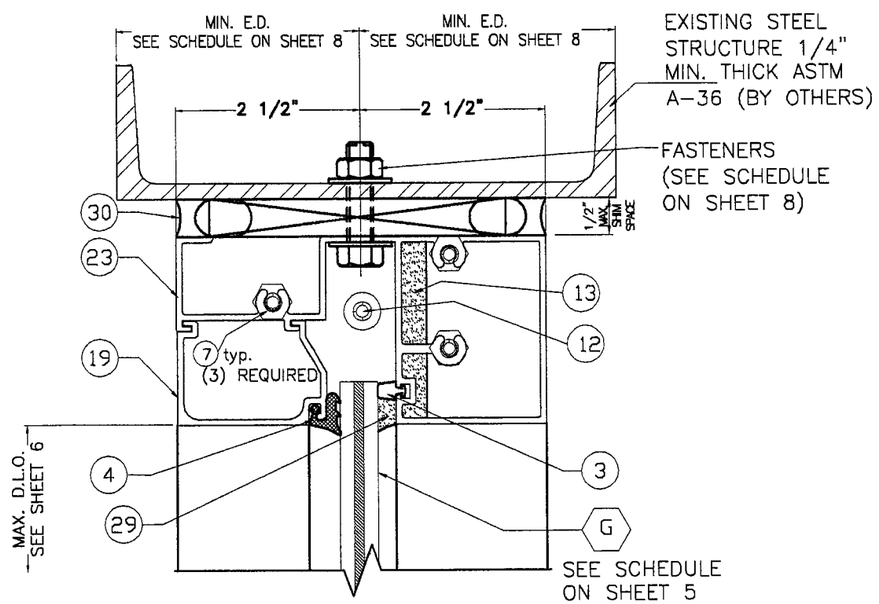

1C
HEAD

FLORIDA BUILDING CODE (High Velocity Hurricane Zone)

SERIES FG-5000 FLUSH GLAZED ALUMINUM WINDOW WALL SYSTEM LARGE & SMALL MISSILE IMPACT LAMINATED GLASS

DRAWN BY F.P. | 05/14/09 DATE | 09-074 DRAWING No | SHEET 11 OF 22

Oldcastle Glass® Engineered Products
803 AIRPORT RD. TERRELL TX 75160
PHONE: (972) 551-6100

REV. No	DESCRIPTION	DATE	REV. No	DESCRIPTION	DATE

© 2009 TILTECO INC.

TILTECO INC.
TILLIT TESTING & ENGINEERING COMPANY
6355 N.W. 36th. St., Ste. 305, VIRGINIA GARDENS, FLORIDA 33166
Phone : (305)871-1530 . Fax : (305)871-1531
e-mail: tilteco@aol.com
EB-0006719
WALTER A. TILLIT Jr., P.E.
FLORIDA Lic. # 44167

P.E. STAMP

MIAMI-DADE STAMP

Approved as complying with the Florida Building Code
Date Nov 18, 2009
NOA# 09-0721.03
Miami Dade Product Control
By Manuel

HEAD CONNECTION DETAILS (SIDE VIEW)
(Continued)

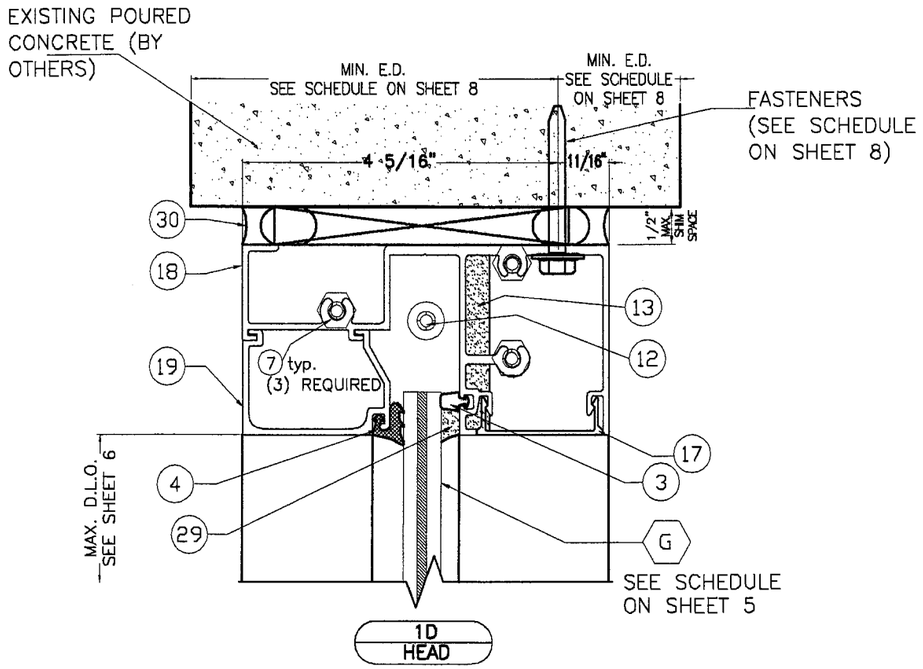

1D HEAD

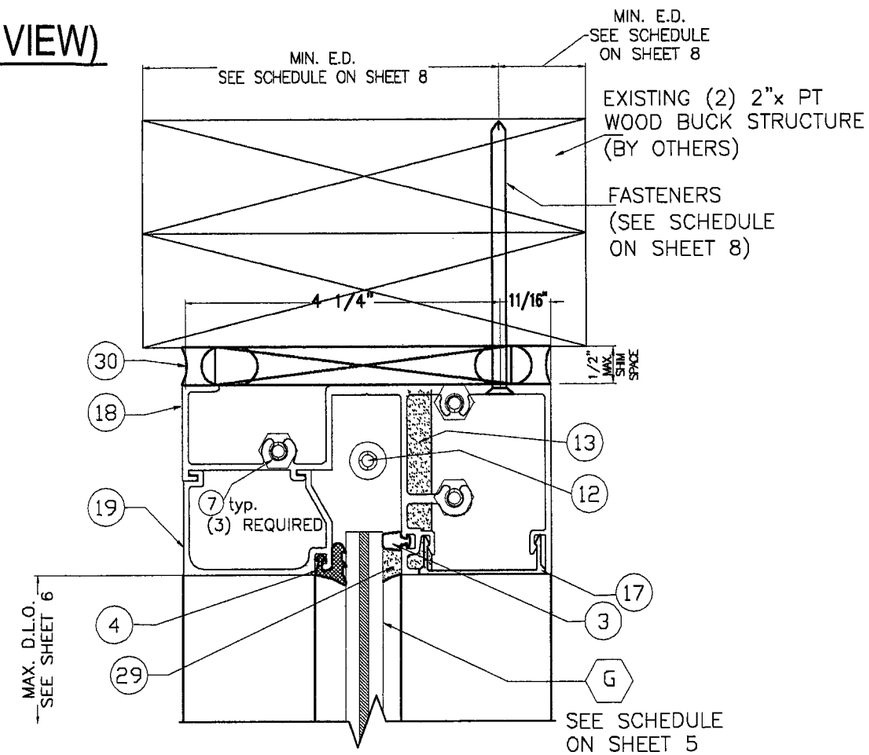

1E HEAD

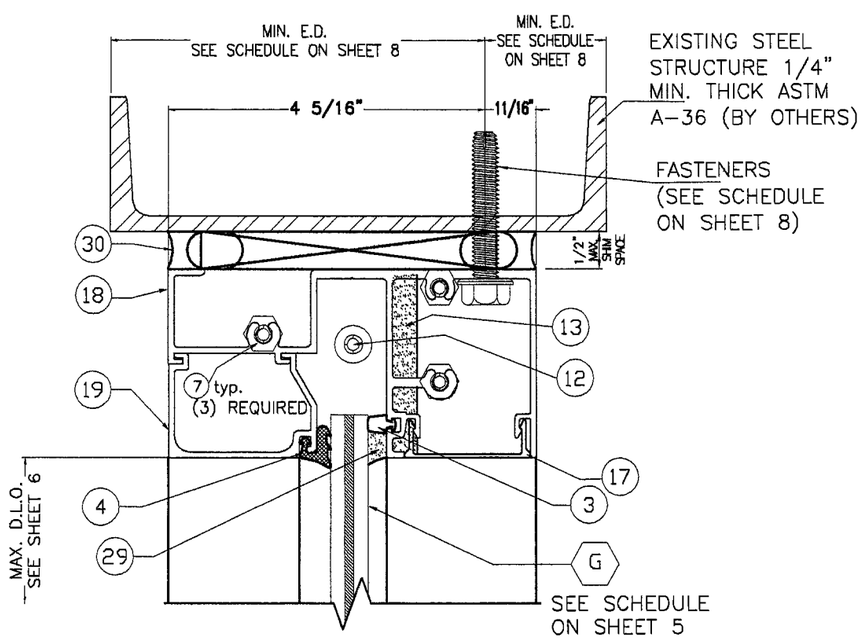

1F HEAD

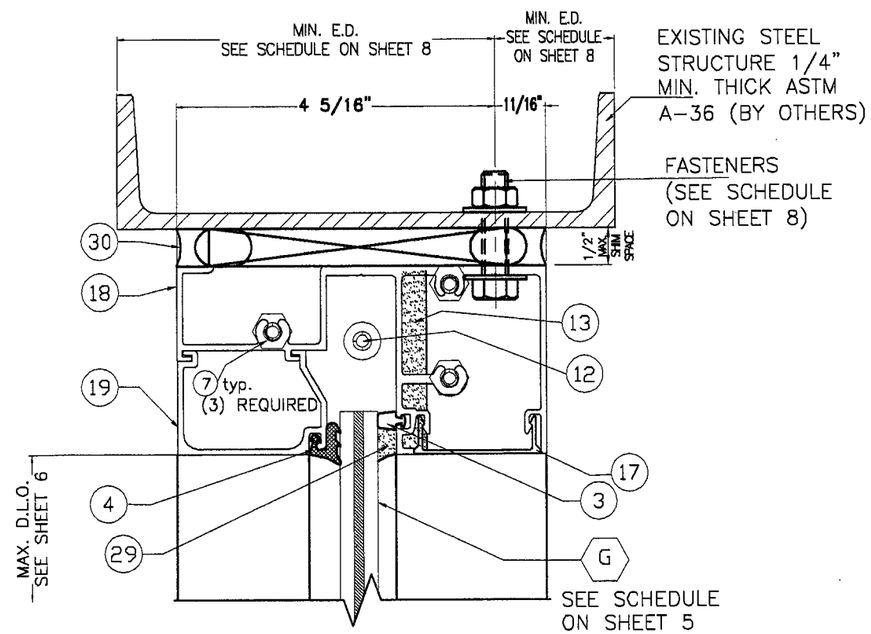

1G HEAD

FLORIDA BUILDING CODE (High Velocity Hurricane Zone)

SERIES FG-5000 FLUSH GLAZED ALUMINUM WINDOW WALL SYSTEM LARGE & SMALL MISSILE IMPACT LAMINATED GLASS

DRAWN BY F.P. | 05/14/09 DATE | 09-074 DRAWING No | SHEET 12 OF 22

Oldcastle Glass® Engineered Products
803 AIRPORT RD. TERRELL TX 75160
PHONE: (972) 551-6100

REV. No	DESCRIPTION	DATE	REV. No	DESCRIPTION	DATE

© 2009 TILTECO INC.

TILTECO INC.
TILLIT TESTING & ENGINEERING COMPANY
6355 N.W. 36th. St., Ste. 305, VIRGINIA GARDENS, FLORIDA 33166
Phone : (305)871-1530 . Fax : (305)871-1531
e-mail: tilteco@aol.com
EB-0006719
WALTER A. TILLIT Jr., P.E.
FLORIDA Lic. # 44167

P.E. STAMP

MIAMI-DADE STAMP

Approved as complying with the Florida Building Code
Date Nov 18 2009
NOA# 09-0721.03
Miami Dade Product Control
By

HORIZONTAL RAIL CONNECTION DETAIL (SIDE VIEW)

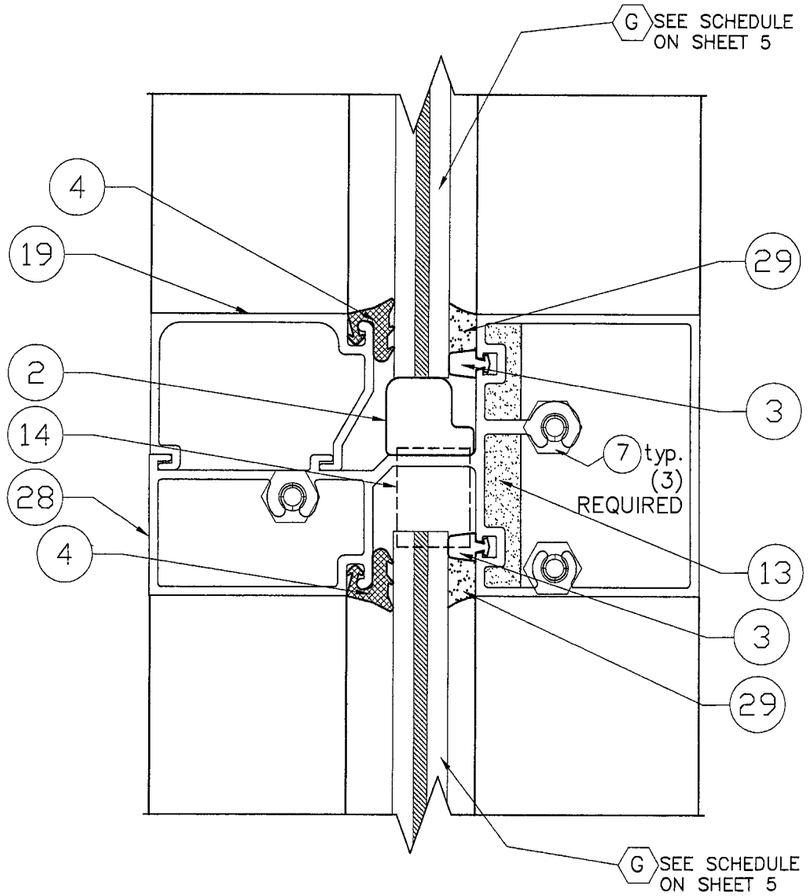

2
HORIZONTAL

MAXIMUM HORIZONTAL PROFILE SPAN FOR A GIVEN DESIGN PRESSURE.

DESIGN PRESSURE (p.s.f)	MAX. HORIZONTAL PROFILE SPAN
56.5 OR LESS	57.5*
> 56.5 TO 70.0	57.5**

* VALID FOR ALL D.L.O. ABOVE HORIZONTAL PROFILE DEFINED PER SCHEDULES ON SHEET 6.

** ONLY VALID FOR 16 1/2" MAX. D.L.O. ABOVE HORIZONTAL PROFILE.

FLORIDA BUILDING CODE (High Velocity Hurricane Zone)

SERIES FG-5000 FLUSH GLAZED ALUMINUM WINDOW WALL SYSTEM LARGE & SMALL MISSILE IMPACT LAMINATED GLASS

Oldcastle Glass®
Engineered Products
803 AIRPORT RD. TERRELL TX 75160
PHONE: (972) 551-6100

REV. No	DESCRIPTION	DATE	REV. No	DESCRIPTION	DATE
	GENERAL	10/9/09			

DRAWN BY F.P.
05/14/09 DATE
09-074 DRAWING No
SHEET 13 OF 22

© 2009 TILTECO INC.

TILTECO INC.
TILLIT TESTING & ENGINEERING COMPANY
6355 N.W. 36th. St., Ste. 305, VIRGINIA GARDENS, FLORIDA 33166
Phone : (305)871-1530 . Fax : (305)871-1531
e-mail: tilteco@aol.com
EB-0006719
WALTER A. TILLIT Jr., P.E.
FLORIDA Lic. # 44167

P.E. STAMP

MIAMI-DADE STAMP

Approved as complying with the Florida Building Code
Date NOV. 18, 2009
NOA# 09-0721.03
Miami Dade Product Control Division
By: Manuel Spa

SILL CONNECTION DETAILS (SIDE VIEW)

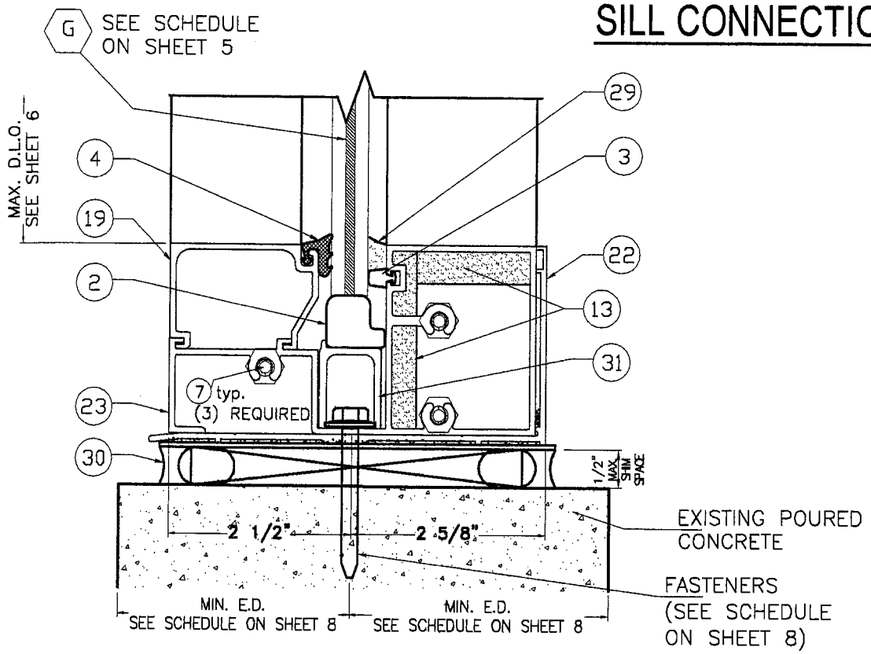

3
SILL

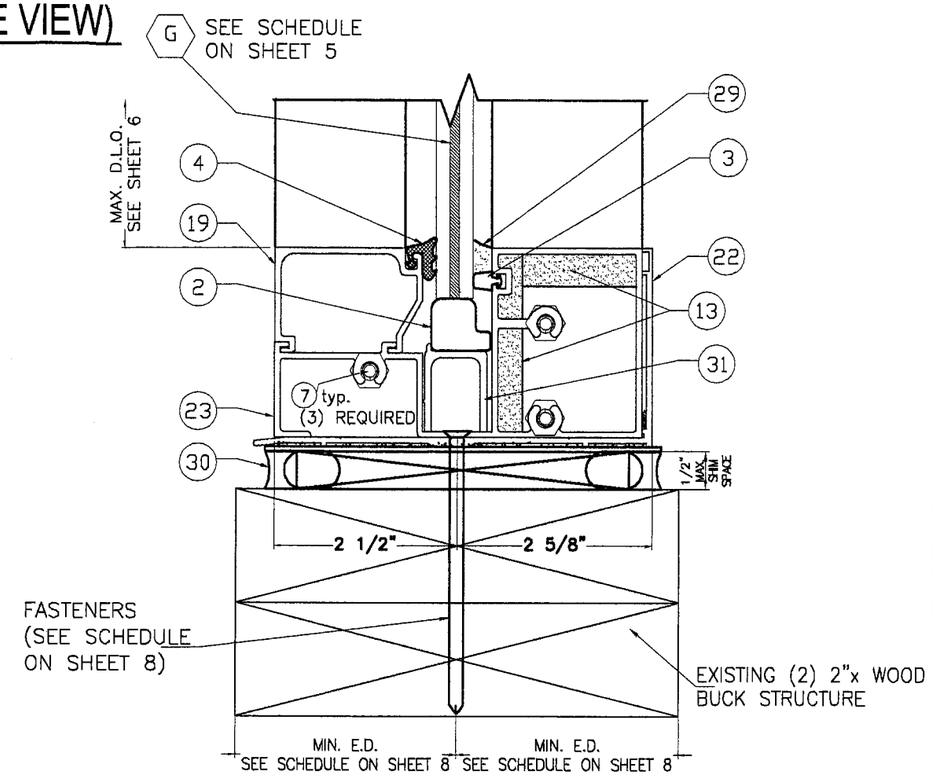

3A
SILL

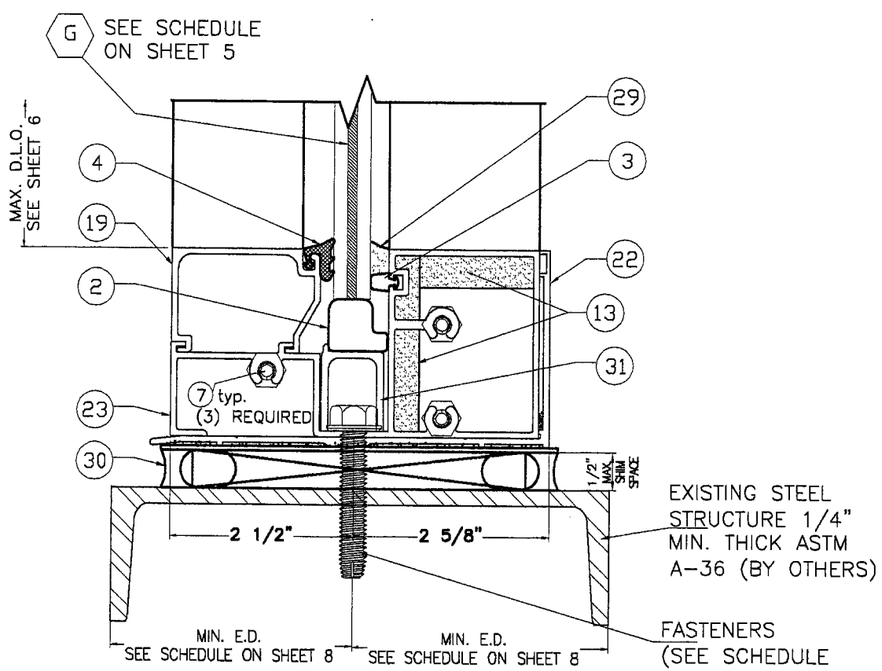

3B
SILL

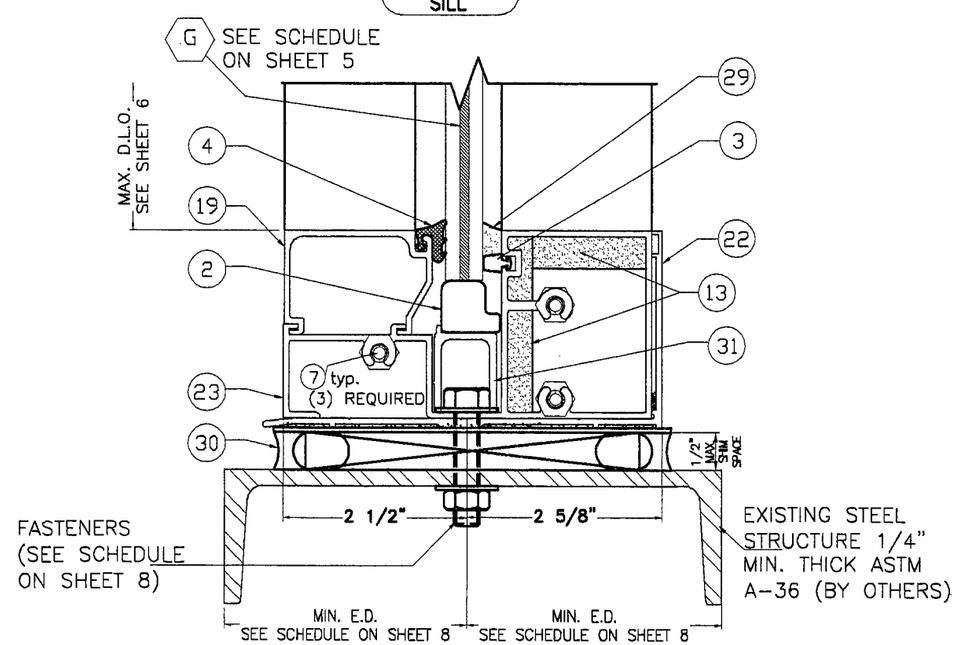

3C
SILL

FLORIDA BUILDING CODE (High Velocity Hurricane Zone)

SERIES FG-5000 FLUSH GLAZED ALUMINUM WINDOW WALL SYSTEM LARGE & SMALL MISSILE IMPACT LAMINATED GLASS

Oldcastle Glass® Engineered Products
803 AIRPORT RD. TERRELL TX 75160
PHONE: (972) 551-6100

REV. No	DESCRIPTION	DATE	REV. No	DESCRIPTION	DATE

DRAWN BY F.P.
05/14/09 DATE
09-074 DRAWING No
SHEET 14 OF 22

© 2009 TILTECO INC.

TILTECO INC.
TILLIT TESTING & ENGINEERING COMPANY
6355 N.W. 36th. St., Ste. 305, VIRGINIA GARDENS, FLORIDA 33166
Phone : (305)871-1530 . Fax : (305)871-1531
e-mail: tilteco@aol.com
EB-0006719
WALTER A. TILLIT Jr., P.E.
FLORIDA Lic. # 44167

P.E. STAMP

10/22/09

MIAMI-DADE STAMP

Approved as complying with the Florida Building Code
Date Nov 18 2009
NOA # 09-0721.03
Miami Dade Product Control Division
By:

SILL CONNECTION DETAILS (SIDE VIEW)
(Continued)

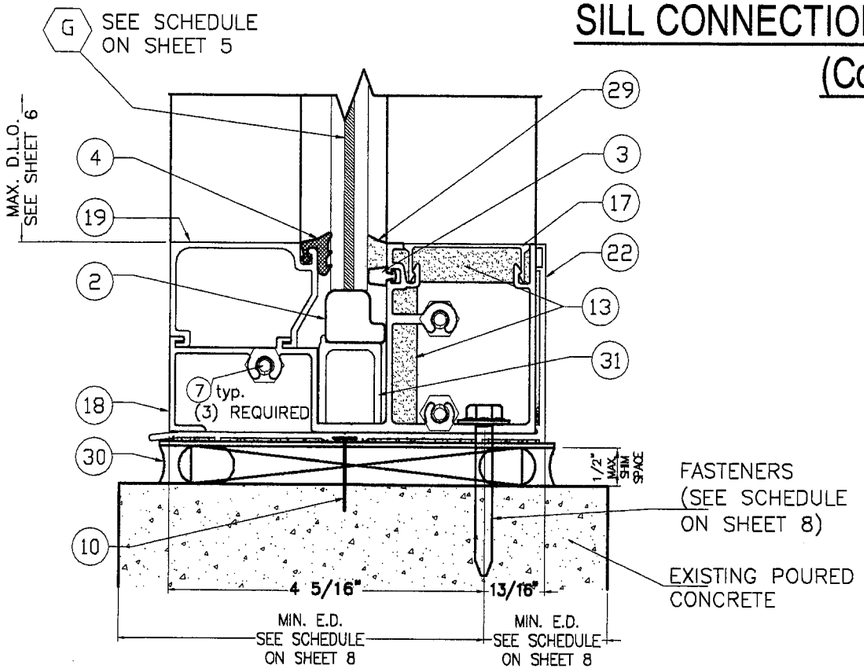

3D SILL

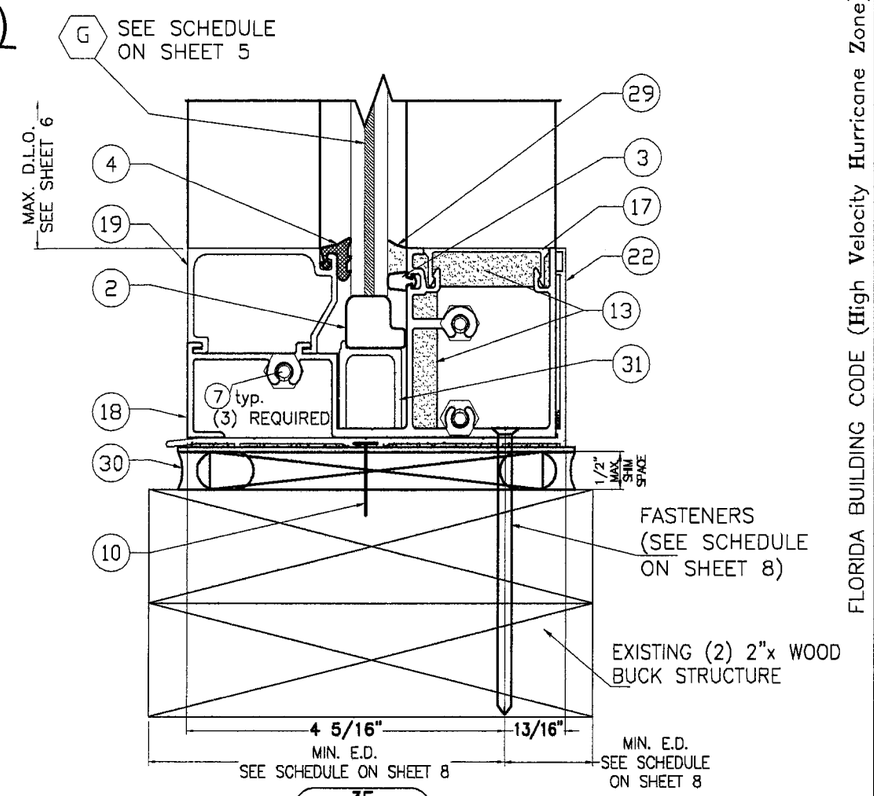

3E SILL

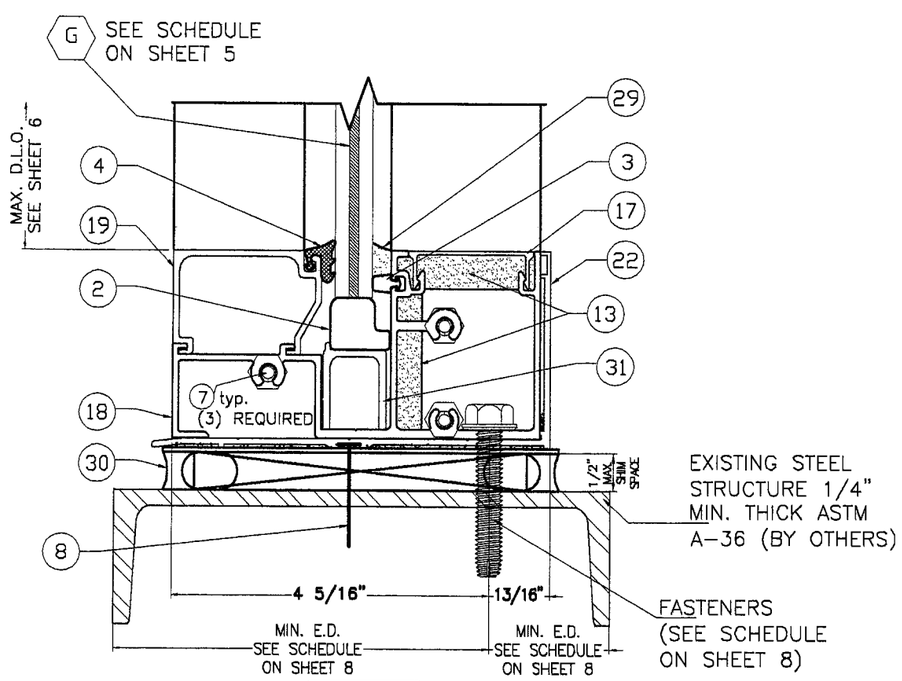

3F SILL

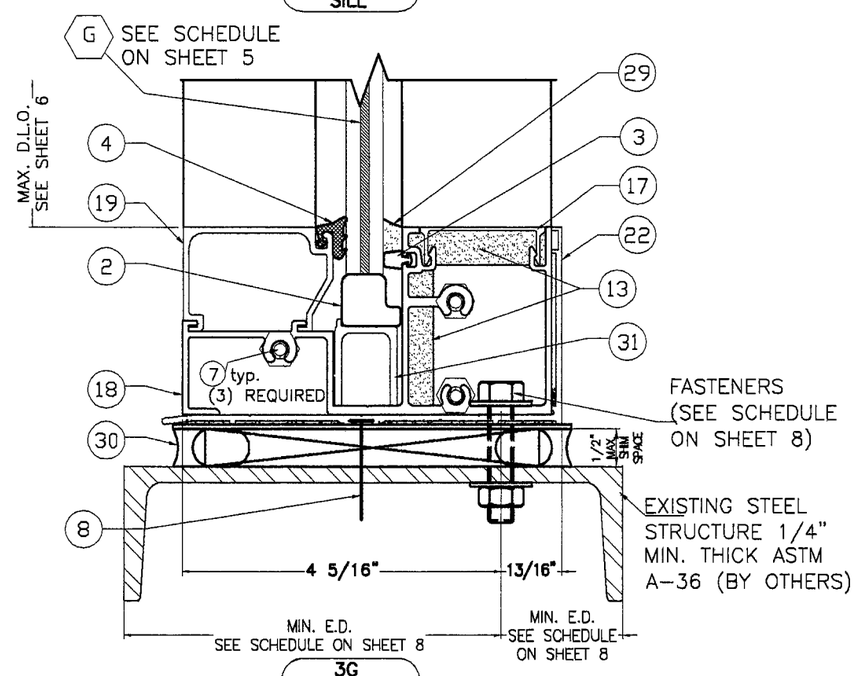

3G SILL

FLORIDA BUILDING CODE (High Velocity Hurricane Zone)

SERIES FG-5000 FLUSH GLAZED ALUMINUM WINDOW
WALL SYSTEM LARGE & SMALL MISSILE
IMPACT LAMINATED GLASS

Oldcastle Glass®
Engineered Products
803 AIRPORT RD. TERRELL TX 75160
PHONE: (972) 551-6100

REV. No	DESCRIPTION	DATE	REV. No	DESCRIPTION	DATE

DRAWN BY F.P. | 05/14/09 DATE | 09-074 DRAWING No | SHEET 15 OF 22

© 2009 TILTECO INC.

TILTECO INC.
TILLIT TESTING & ENGINEERING COMPANY
6355 N.W. 36th. St., Ste. 305, VIRGINIA GARDENS, FLORIDA 33166
Phone : (305)871-1530 . Fax : (305)871-1531
e-mail: titeco@aol.com
EB-0006719
WALTER A. TILLIT Jr., P.E.
FLORIDA Lic. # 44167

P.E. STAMP

MIAMI-DADE STAMP

Approved as complying with the Florida Building Code
Date Nov 18, 2009
NOAC 09-0721.03
Miami-Dade Product Control
By

SILL CONNECTION DETAILS
(SIDE VIEW)
(Continued)

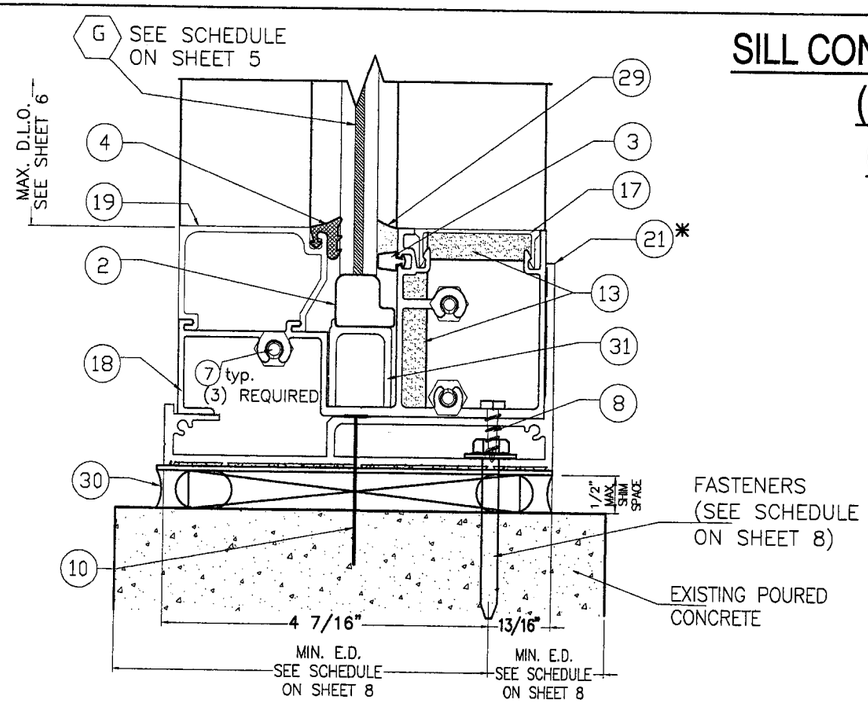

3H
SILL

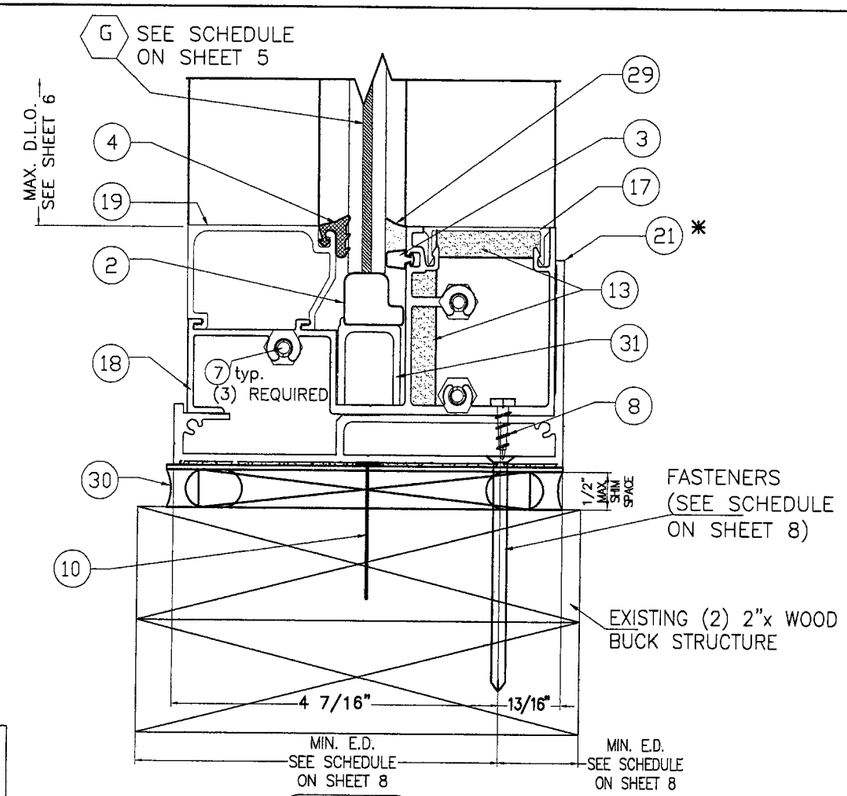

3I
SILL

* THIS SILL TYPE SHALL ONLY BE USED FOR DESIGN LOADS UP TO 65 psf & FOR MULLION HEIGHTS UP TO 108".

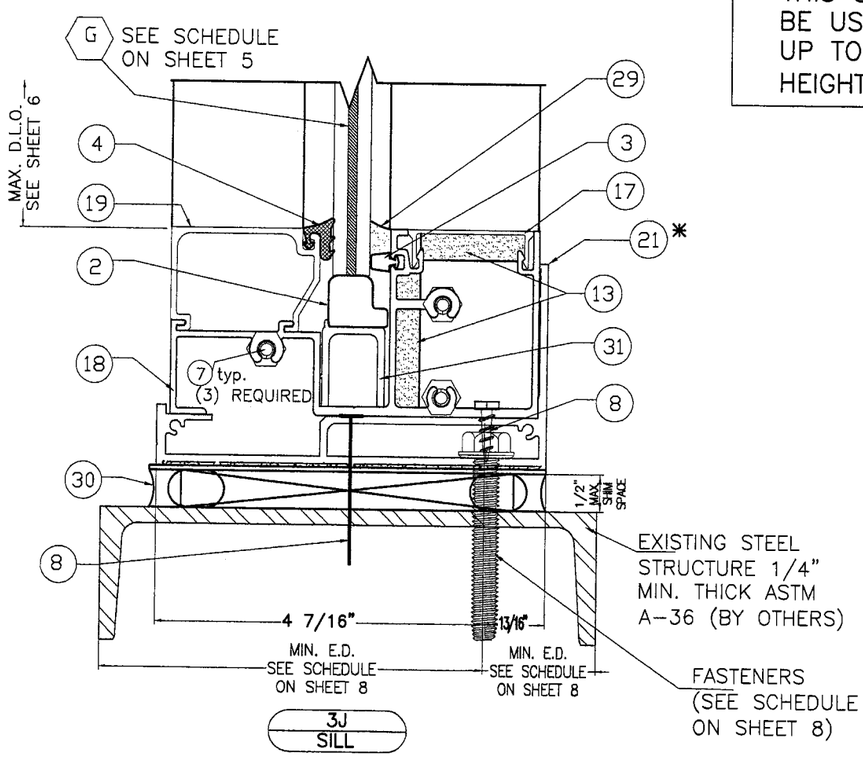

3J
SILL

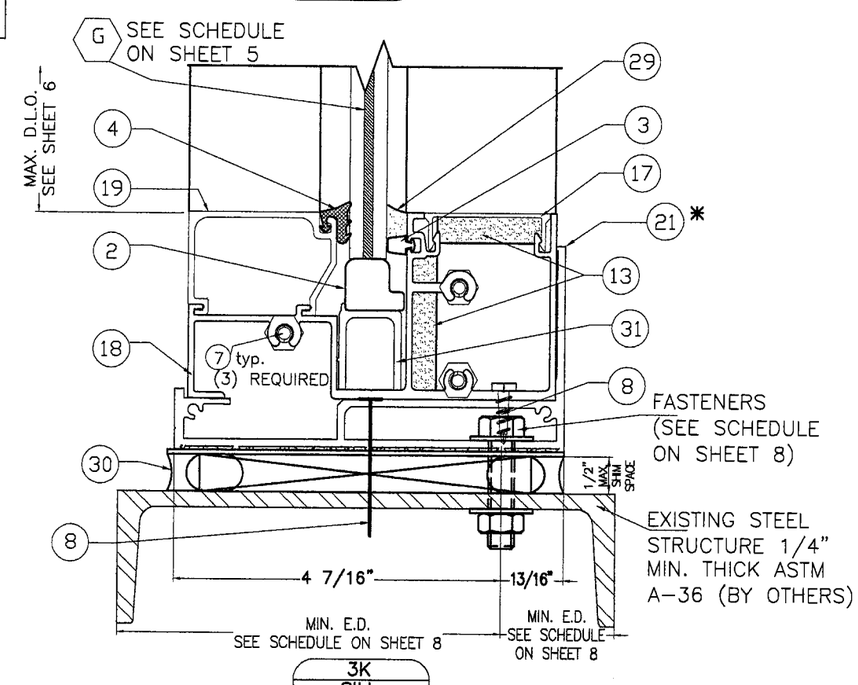

3K
SILL

FLORIDA BUILDING CODE (High Velocity Hurricane Zone)

SERIES FG-5000 FLUSH GLAZED ALUMINUM WINDOW WALL SYSTEM LARGE & SMALL MISSILE IMPACT LAMINATED GLASS

Oldcastle Glass®
Engineered Products
803 AIRPORT RD. TERRELL TX 75160
PHONE: (972) 551-6100

REV. No	DESCRIPTION	DATE	REV. No	DESCRIPTION	DATE

DRAWN BY F.P. | 05/14/09 DATE | 09-074 DRAWING No | SHEET 16 OF 22

© 2009 TILTECO INC.

TILTECO INC.
TILLIT TESTING & ENGINEERING COMPANY
6355 N.W. 36th. St., Ste. 305, VIRGINIA GARDENS, FLORIDA 33166
Phone : (305)871-1530 Fax : (305)871-1531
e-mail: tilteco@aol.com
EB-0006719
WALTER A. TILLIT Jr., P.E.
FLORIDA Lic. # 44167

P.E. STAMP

10/23/09

MIAMI-DADE STAMP

Approved as complying with the Florida Building Code
Date Nov 18 2009
NOA# 09-0722.03
Miami Dade Product Control Division
By

HORIZONTAL SECTIONS AT STANDARD AND CORNER MULLIONS

STANDARD MULLION (20) + (26)

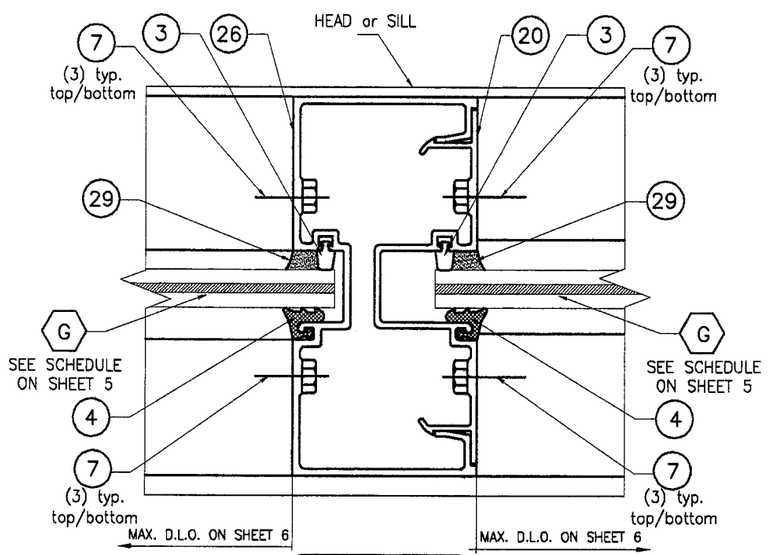

5
MULLION PLAN

STANDARD MULLION (20) + (26) W/ STEEL CHANNEL (16)

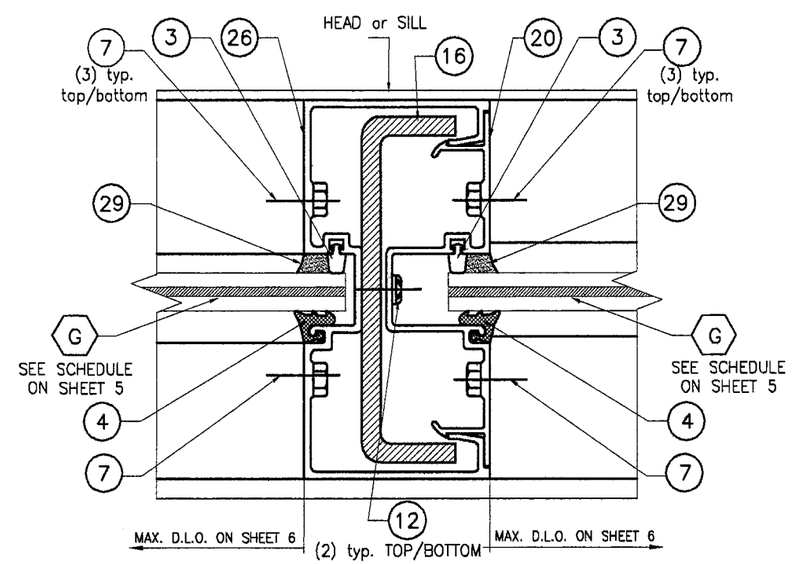

5A
MULLION PLAN

OUTSIDE CORNER MULLION (27) + (2) (20)

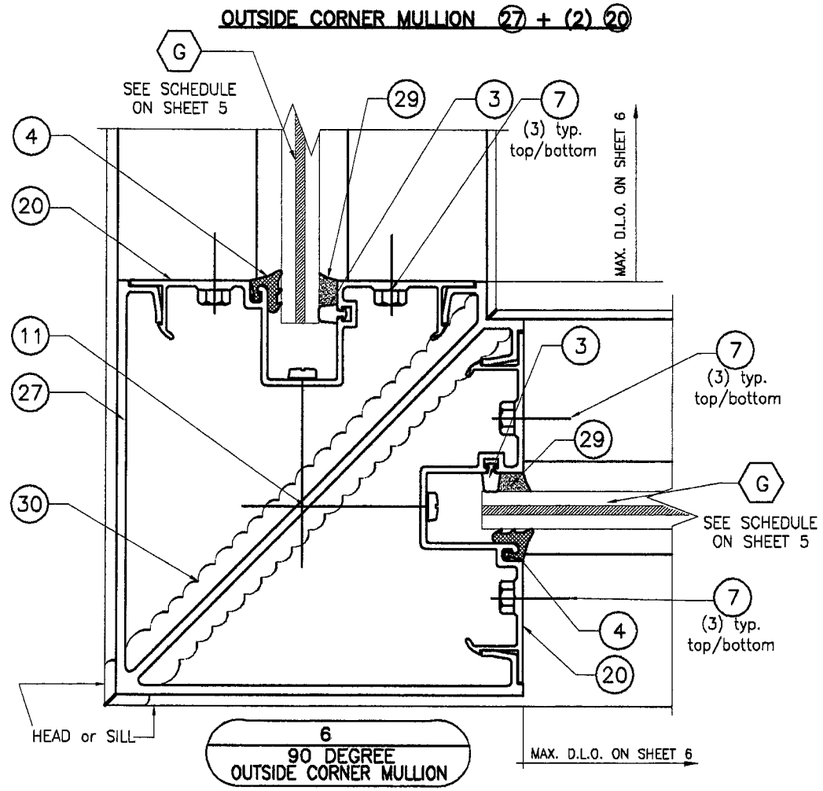

6
90 DEGREE
OUTSIDE CORNER MULLION

INSIDE CORNER MULLION (27) + (2) (20)

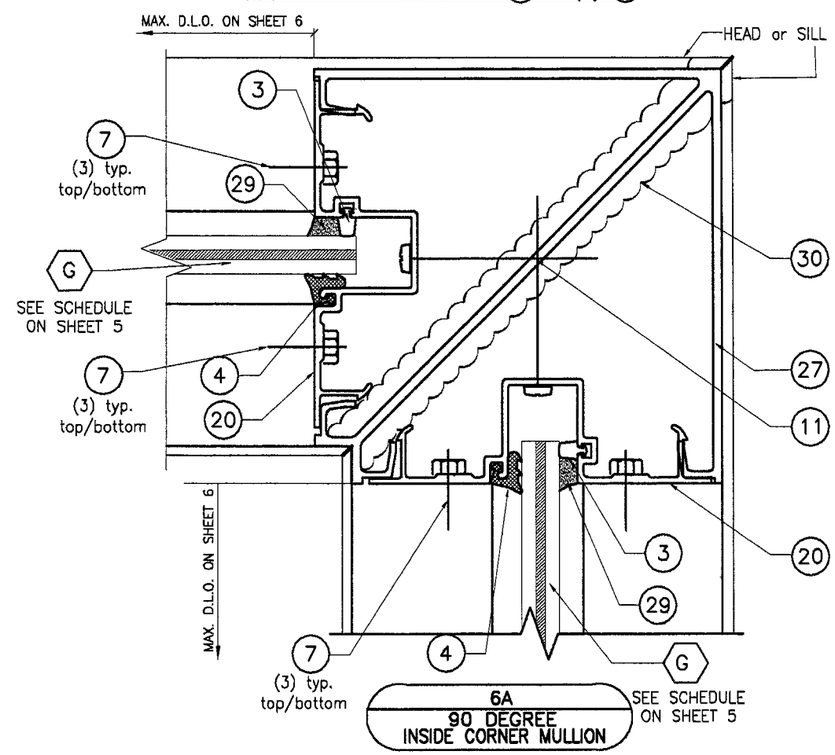

6A
90 DEGREE
INSIDE CORNER MULLION

FLORIDA BUILDING CODE (High Velocity Hurricane Zone)

SERIES FG-5000 FLUSH GLAZED ALUMINUM WINDOW WALL SYSTEM LARGE & SMALL MISSILE IMPACT LAMINATED GLASS

DRAWN BY M.C.V. | 05/14/09 DATE | 09-074 DRAWING No | SHEET 17 OF 22

Oldcastle Glass®
Engineered Products
803 AIRPORT RD. TERRELL TX 75160
PHONE: (972) 551-6100

REV. No	DESCRIPTION	DATE	REV. No	DESCRIPTION	DATE

© 2009 TILTECO INC.

TILTECO INC.
TILLIT TESTING & ENGINEERING COMPANY
6355 N.W. 36th. St., Ste. 305, VIRGINIA GARDENS, FLORIDA 33166
Phone : (305)871-1530 : Fax : (305)871-1531
e-mail: tilteco@aol.com
EB-0006719
WALTER A. TILLIT Jr., P.E.
FLORIDA Lic. # 44167

P.E. STAMP

MIAMI-DADE STAMP

Approved as complying with the Florida Building Code
Date Nov. 18, 2009
NOA# 09-0422.03
Miami Dade Product Control
By

HORIZONTAL SECTIONS AT JAMB

TO POURED CONCRETE OR GROUT FILLED CONCRETE BLOCK STRUCTURE

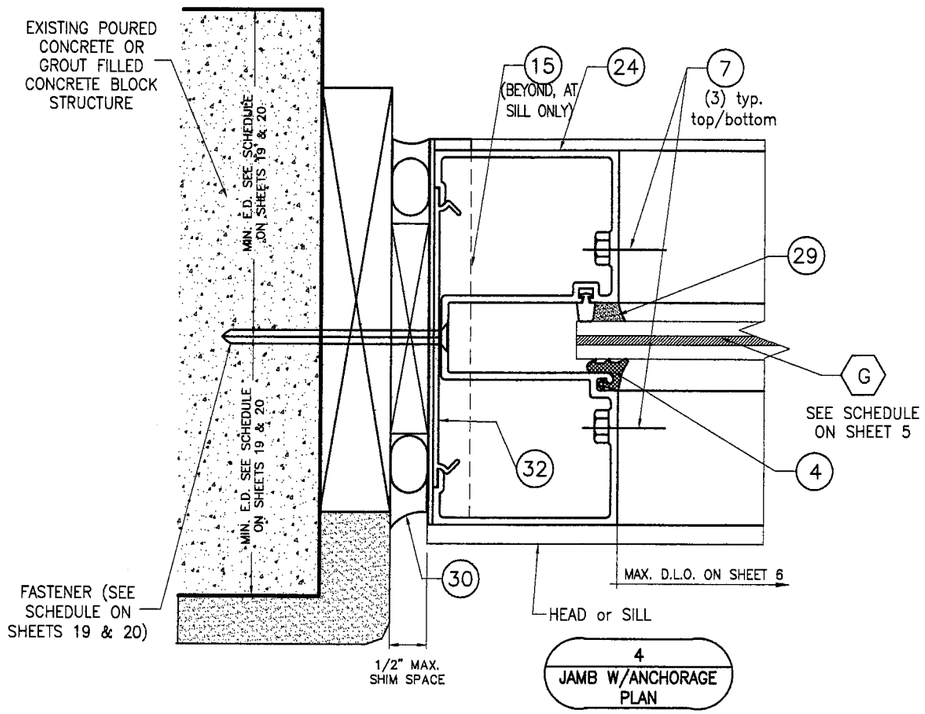

4
JAMB W/ANCHORAGE PLAN

TO STEEL STRUCTURE

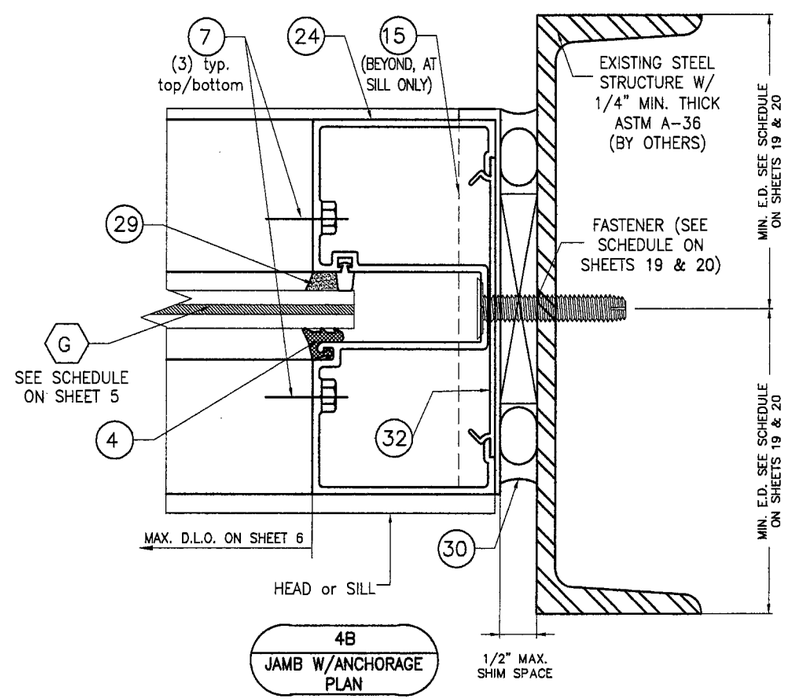

4B
JAMB W/ANCHORAGE PLAN

TO WOOD STRUCTURE

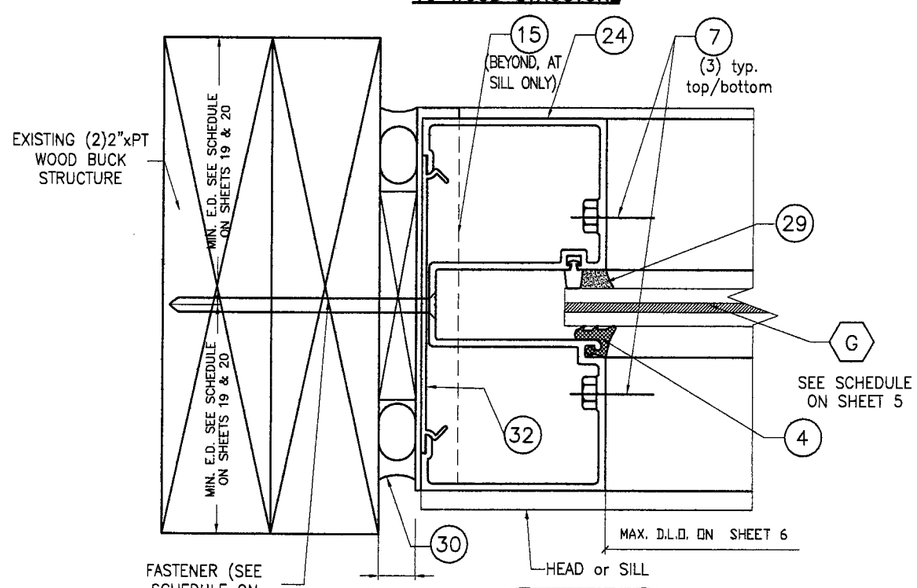

4A
JAMB W/ANCHORAGE PLAN

TO EXISTING STRUCTURE

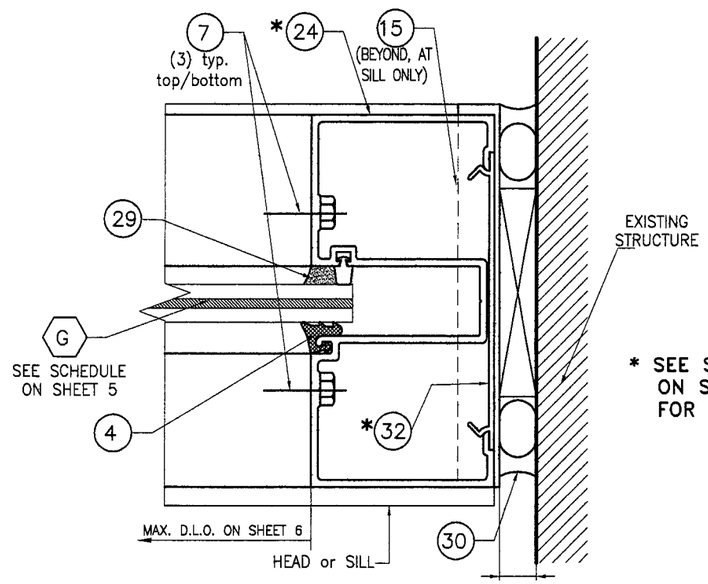

4C
JAMB W/ NO ANCHORAGE PLAN

* SEE SCHEDULE ON SHEET 19 FOR MAX. SPAN.

FLORIDA BUILDING CODE (High Velocity Hurricane Zone)

SERIES FG-5000 FLUSH GLAZED ALUMINUM WINDOW WALL SYSTEM LARGE & SMALL MISSILE IMPACT LAMINATED GLASS

Oldcastle Glass®
Engineered Products
803 AIRPORT RD. TERRELL TX 75160
PHONE: (972) 551-6100

REV. No	DESCRIPTION	DATE	REV. No	DESCRIPTION	DATE

DRAWN BY M.C.V.
05/14/09 DATE
09-074 DRAWING No
SHEET 18 OF 22

© 2009 TILTECO INC.

TILTECO INC.
TILLIT TESTING & ENGINEERING COMPANY
6355 N.W. 36th. St., Ste. 305, VIRGINA GARDENS, FLORIDA 33166
Phone : (305)871-1530 . Fax : (305)871-1531
e-mail: tilteco@aol.com
EB-0006719
WALTER A. TILLIT Jr., P.E.
FLORIDA Lic. # 44167

P.E. STAMP

MIAMI-DADE STAMP

Approved as complying with the Florida Building Code
Date Nov 18 2009
NOA# 09-0721.03
Miami-Dade Product Control
By

MAXIMUM DESIGN PRESSURE RATING FOR JAMBS W/O ANCHORAGE

MAXIMUM JAMB SPAN "L"(FT) SCHEDULE FOR A GIVEN DESIGN WIND LOAD "W" (psf) AND A GIVEN MULLION EFFECTIVE SPACING "b"

MAXIMUM DESIGN LOAD "W±" (psf)	EFFECTIVE SPACING "b" (Ft-in)	JAMB W/O CONNECTION "L" (Ft-in)
60.0	3 '- 6 "	9 '- 0 "
	4 '- 0 "	9 '- 0 "
	4 '- 6 "	8 '- 2 "
	5 '- 0 "	7 '- 4 "
65.0	3 '- 6 "	9 '- 0 "
	4 '- 0 "	8 '- 5 "
	4 '- 6 "	7 '- 6 "
	5 '- 0 "	6 '- 9 "

MAXIMUM PRESSURE RATING FOR JAMBS FASTENED W/ 3/8"ø FASTENERS

OPTION #1 : (1) FASTENER CONNECTION

MAXIMUM MULLION SPAN "L" (Ft-in)	EFFECTIVE SPACING "b" (Ft-in)	MAXIMUM DESIGN LOAD W (psf) POURED CONCRETE (Min. f'c = 3ksi) SUBSTRATE FASTENER TYPES F (3/8"ø)	G (3/8"ø)	H (3/8"ø)	GROUT FILLED CONCRETE BLOCK SUBSTRATE FASTENER TYPES I (3/8"ø)	J (3/8"ø)	K (3/8"ø)	1/4" Min. THK ASTM A-36 STEEL SUBSTRATE FASTENER L (3/8"ø)	DOUBLE BUCK 3" Min. THK. (G=0.55) WOOD SUBSTRATE FASTENER M (3/8"ø)
9 '- 0 " or less	3 '- 6 "	84.2	73.7	69.5	46.3	84.2	69.5	90.0	27.2
	4 '- 0 "	73.6	64.4	60.8	40.6	73.6	60.8	83.4	23.8
	4 '- 6 "	65.5	57.3	54.0	36.0	65.5	54.0	74.1	21.1
	5 '- 0 "	58.9	51.6	48.6	32.4	58.9	48.6	66.7	19.0
9 '- 6 "	3 '- 6 "	79.7	69.8	65.8	43.9	79.7	65.8	90.0	25.8
	4 '- 0 "	69.8	61.1	57.6	38.4	69.8	57.6	79.0	22.5
	4 '- 6 "	62.0	54.3	51.2	34.2	62.0	51.2	70.2	20.0
	5 '- 0 "	55.8	48.8	46.1	30.7	55.8	46.1	63.2	18.0
10 '- 0 "	3 '- 6 "	75.7	66.3	62.5	41.7	75.7	62.5	85.8	24.5
	4 '- 0 "	66.3	58.0	54.7	36.5	66.3	54.7	75.0	21.4
	4 '- 6 "	58.9	51.6	48.6	32.4	58.9	48.6	66.7	19.0
	5 '- 0 "	53.0	46.4	43.8	29.2	53.0	43.8	60.0	17.1

OPTION #2 : (2) FASTENER CONNECTION

MAXIMUM MULLION SPAN "L" (Ft-in)	EFFECTIVE SPACING "b" (Ft-in)	MAXIMUM DESIGN LOAD W (psf) POURED CONCRETE (Min. f'c = 3ksi) SUBSTRATE FASTENER TYPES F (3/8"ø)	G (3/8"ø)	H (3/8"ø)	GROUT FILLED CONCRETE BLOCK SUBSTRATE FASTENER TYPES I (3/8"ø)	J (3/8"ø)	K (3/8"ø)	1/4" Min. THK ASTM A-36 STEEL SUBSTRATE FASTENER L (3/8"ø)	DOUBLE BUCK 3" Min. THK. (G=0.55) WOOD SUBSTRATE FASTENER M (3/8"ø)
9 '- 0 " or less	3 '- 6 "	90.0	90.0	90.0	90.0	90.0	90.0	90.0	54.4
	4 '- 0 "	90.0	90.0	90.0	81.1	90.0	90.0	90.0	47.6
	4 '- 6 "	90.0	90.0	90.0	72.1	90.0	90.0	90.0	42.3
	5 '- 0 "	90.0	90.0	90.0	64.9	90.0	90.0	90.0	38.1
9 '- 6 "	3 '- 6 "	90.0	90.0	90.0	87.8	90.0	90.0	90.0	51.5
	4 '- 0 "	90.0	90.0	90.0	76.8	90.0	90.0	90.0	45.1
	4 '- 6 "	90.0	90.0	90.0	68.3	90.0	90.0	90.0	40.1
	5 '- 0 "	90.0	90.0	90.0	61.5	90.0	90.0	90.0	36.1
10 '- 0 "	3 '- 6 "	90.0	90.0	90.0	83.4	90.0	90.0	90.0	48.9
	4 '- 0 "	90.0	90.0	90.0	73.0	90.0	90.0	90.0	42.8
	4 '- 6 "	90.0	90.0	90.0	64.9	90.0	90.0	90.0	38.1
	5 '- 0 "	90.0	90.0	87.5	58.4	90.0	87.5	90.0	34.3

OPTION #3 : (3) FASTENER CONNECTION

MAXIMUM MULLION SPAN "L" (Ft-in)	EFFECTIVE SPACING "b" (Ft-in)	MAXIMUM DESIGN LOAD W (psf) POURED CONCRETE (Min. f'c = 3ksi) SUBSTRATE FASTENER H (3/8"ø)	GROUT FILLED CONCRETE BLOCK SUBSTRATE FASTENER I (3/8"ø)	DOUBLE BUCK 3" Min. THK. (G=0.55) WOOD SUBSTRATE FASTENER M (3/8"ø)
9 '- 0 " or less	3 '- 6 "	90.0	90.0	81.6
	4 '- 0 "	90.0	90.0	71.4
	4 '- 6 "	90.0	90.0	63.4
	5 '- 0 "	90.0	90.0	57.1
9 '- 6 "	3 '- 6 "	90.0	90.0	77.3
	4 '- 0 "	90.0	90.0	67.6
	4 '- 6 "	90.0	90.0	60.1
	5 '- 0 "	90.0	90.0	54.1
10 '- 0 "	3 '- 6 "	90.0	90.0	73.4
	4 '- 0 "	90.0	90.0	64.2
	4 '- 6 "	90.0	90.0	57.1
	5 '- 0 "	90.0	87.6	51.4

OPTION #4 : (4) FASTENER CONNECTION

MAXIMUM MULLION SPAN "L" (Ft-in)	EFFECTIVE SPACING "b" (Ft-in)	MAXIMUM DESIGN LOAD W (psf) GROUT FILLED CONCRETE BLOCK SUBSTRATE FASTENER I (3/8"ø)	DOUBLE BUCK 3" Min. THK. (G=0.55) WOOD SUBSTRATE FASTENER M (3/8"ø)
9 '- 0 " or less	3 '- 6 "	90.0	90.0
	4 '- 0 "	90.0	90.0
	4 '- 6 "	90.0	84.6
	5 '- 0 "	90.0	76.1
9 '- 6 "	3 '- 6 "	90.0	90.0
	4 '- 0 "	90.0	90.0
	4 '- 6 "	90.0	80.1
	5 '- 0 "	90.0	72.1
10 '- 0 "	3 '- 6 "	90.0	90.0
	4 '- 0 "	90.0	85.7
	4 '- 6 "	90.0	76.1
	5 '- 0 "	90.0	68.5

OPTION #5 : (5) FASTENER CONNECTION

MAXIMUM MULLION SPAN "L" (Ft-in)	EFFECTIVE SPACING "b" (Ft-in)	MAXIMUM DESIGN LOAD W (psf) DOUBLE BUCK 3" Min. THK. (G=0.55) WOOD SUBSTRATE FASTENER M (3/8"ø)
9 '- 0 " or less	3 '- 6 "	90.0
	4 '- 0 "	90.0
	4 '- 6 "	90.0
	5 '- 0 "	90.0
9 '- 6 "	3 '- 6 "	90.0
	4 '- 0 "	90.0
	4 '- 6 "	90.0
	5 '- 0 "	90.0
10 '- 0 "	3 '- 6 "	90.0
	4 '- 0 "	90.0
	4 '- 6 "	90.0
	5 '- 0 "	85.7

FASTENERS TYPES

F - 3/8"Ø HILTI KWIK BOLT 3 ANCHOR W/ 2" Min. EMBEDMENT INTO 6" Min. THICK POURED CONCRETE (Min. f'c = 3 ksi) BEYOND ANY FINISH MATERIAL, W/ 4" Min. SPACING & 3 5/8" MIN. EDGE DISTANCE.

G - 3/8"Ø POWER FASTENERS TAPPER ANCHOR W/ 1 3/4" Min. EMBEDMENT INTO POURED CONCRETE (Min. f'c = 3 ksi) BEYOND ANY FINISH MATERIAL, W/ 4 1/2" Min. SPACING & 4 1/2" MIN. EDGE DISTANCE.

H - 3/8"Ø HILTI HUS-H SCREW ANCHOR W/ 2 3/4" Min. EMBEDMENT INTO POURED CONCRETE (Min. f'c = 3 ksi) BEYOND ANY FINISH MATERIAL, W/ 5 1/2" Min. SPACING & 5" MIN. EDGE DISTANCE.

I - 3/8"Ø POWER FASTENERS TAPPER ANCHOR W/ 1 3/4" Min. EMBEDMENT INTO GROUT FILLED CONCRETE BLOCK BEYOND ANY FINISH MATERIAL, W/ 6" Min. SPACING & 4 1/2" MIN. EDGE DISTANCE.

J - 3/8"Ø HILTI KWIK BOLT 3 ANCHOR W/ 2 1/2" Min. EMBEDMENT INTO GROUT FILLED CONCRETE BLOCK BEYOND ANY FINISH MATERIAL, W/ 6" Min. SPACING & 3 5/8" MIN. EDGE DISTANCE.

K - 3/8"Ø HILTI HUS-H SCREW ANCHOR W/ 3" Min. EMBEDMENT INTO GROUT FILLED CONCRETE BLOCK BEYOND ANY FINISH MATERIAL, W/ 8" Min. SPACING & 4" MIN. EDGE DISTANCE.

L - 3/8"Ø TYPE "F" BOLT TO 1/4" Min. THK. ASTM A-36 STEEL W/ 1 1/2" Min. SPACING & 2" MIN. EDGE DISTANCE OR 3/8"Ø -13 SAE GRADE 5 GALVANIZED STEEL HHB THRU BOLT W/ NUT & LOCK WASHER.

M - 3/8"Ø LAG SCREWS TO DOUBLE BUCK (G=0.55) W/ 3" Min. PENETRATION INTO WOOD W/ 1 1/2" Min. SPACING & 2" MIN. EDGE DISTANCE.

OPTION # 1 (ELEVATION)
(1) FASTENER CONNECTION

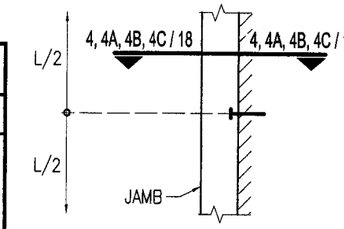

OPTION # 2 (ELEVATION)
(2) FASTENERS CONNECTION

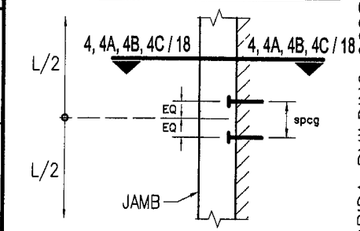

OPTION # 3 (ELEVATION)
(3) FASTENERS CONNECTION

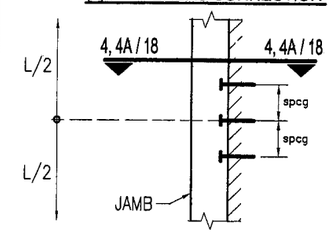

OPTION # 4 (ELEVATION)
(4) FASTENERS CONNECTION

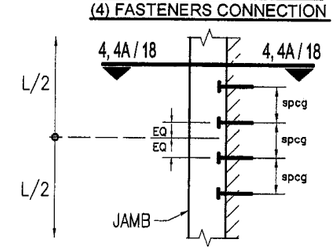

OPTION # 5 (ELEVATION)
(5) FASTENERS CONNECTION

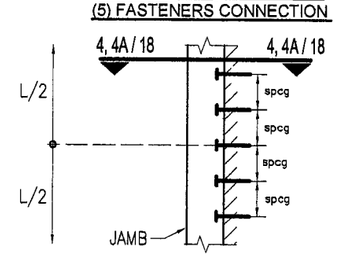

FLORIDA BUILDING CODE (High Velocity Hurricane Zone)

SERIES FG-5000 FLUSH GLAZED ALUMINUM WINDOW WALL SYSTEM LARGE & SMALL MISSILE IMPACT LAMINATED GLASS

Oldcastle Glass®
Engineered Products
803 AIRPORT RD. TERRELL TX 75160
PHONE: (972) 551-6100

REV. No	DESCRIPTION	DATE	REV. No	DESCRIPTION	DATE

DRAWN BY L.G.
05/14/09 DATE
09-074 DRAWING No
SHEET 19 OF 22

© 2009 TILTECO INC.

TILTECO INC.
TILLIT TESTING & ENGINEERING COMPANY
6355 N.W. 36th. St., Ste. 305, VIRGINIA GARDENS, FLORIDA 33166
Phone : (305)871-1530 , Fax : (305)871-1531
e-mail: titeco@aol.com
EB-0006719
WALTER A. TILLIT Jr., P.E.
FLORIDA Lic. # 44167

P.E. STAMP

MIAMI-DADE STAMP

Approved as complying with the Florida Building Code
Date Nov 18, 2009
NOA 09-0722.03
Miami-Dade Product Control
By

MAXIMUM PRESSURE RATING FOR JAMBS FASTENED W/ 1/2"Ø FASTENERS

OPTION #1 : (1) FASTENER CONNECTION

MAXIMUM MULLION SPAN "L" (Ft-in)	EFFECTIVE SPACING "b" (Ft-in)	MAXIMUM DESIGN LOAD W (psf) POURED CONCRETE (Min. fc = 3ksi) SUBSTRATE FASTENER N (1/2"ø)	O (1/2"ø)	GROUT FILLED CONCRETE BLOCK SUBSTRATE FASTENER TYPES P (1/2"ø)	Q (1/2"ø)	1/4" Min. THK ASTM A-36 STEEL SUBSTRATE FASTENER R (1/2"ø)	DOUBLE BUCK 3" Min. THK. (G=0.55) WOOD SUBSTRATE FASTENER S (1/2"ø)
9 '- 0 " or less	3 '- 6 "	90.0	90.0	90.0	90.0	90.0	37.0
	4 '- 0 "	90.0	90.0	90.0	90.0	90.0	32.4
	4 '- 6 "	90.0	90.0	90.0	90.0	90.0	28.8
	5 '- 0 "	90.0	90.0	90.0	90.0	90.0	25.9
9 '- 6 "	3 '- 6 "	90.0	90.0	90.0	90.0	90.0	35.1
	4 '- 0 "	90.0	90.0	90.0	90.0	90.0	30.7
	4 '- 6 "	90.0	90.0	90.0	90.0	90.0	27.3
	5 '- 0 "	90.0	90.0	90.0	90.0	90.0	24.6
10 '- 0 "	3 '- 6 "	90.0	90.0	90.0	90.0	90.0	33.3
	4 '- 0 "	90.0	90.0	90.0	90.0	90.0	29.2
	4 '- 6 "	90.0	90.0	90.0	90.0	90.0	25.9
	5 '- 0 "	90.0	90.0	86.4	90.0	90.0	23.3

OPTION #2 : (2) FASTENERS CONNECTION

MAXIMUM MULLION SPAN "L" (Ft-in)	EFFECTIVE SPACING "b" (Ft-in)	MAXIMUM DESIGN LOAD W (psf) GROUT FILLED CONCRETE BLOCK SUBSTRATE FASTENER P (1/2"ø)	MAXIMUM DESIGN LOAD W (psf) DOUBLE BUCK 3" Min. THK. (G=0.55) WOOD SUBSTRATE FASTENER S (1/2"ø)
9 '- 0 " or less	3 '- 6 "	90.0	74.0
	4 '- 0 "	90.0	64.8
	4 '- 6 "	90.0	57.6
	5 '- 0 "	90.0	51.8
9 '- 6 "	3 '- 6 "	90.0	70.1
	4 '- 0 "	90.0	61.4
	4 '- 6 "	90.0	54.6
	5 '- 0 "	90.0	49.1
10 '- 0 "	3 '- 6 "	90.0	66.6
	4 '- 0 "	90.0	58.3
	4 '- 6 "	90.0	51.8
	5 '- 0 "	90.0	46.6

OPTION #3 : (3) FASTENERS CONNECTION

MAXIMUM MULLION SPAN "L" (Ft-in)	EFFECTIVE SPACING "b" (Ft-in)	MAXIMUM DESIGN LOAD W (psf) DOUBLE BUCK 3" Min. THK. (G=0.55) WOOD SUBSTRATE FASTENER S (1/2"ø)
9 '- 0 " or less	3 '- 6 "	90.0
	4 '- 0 "	90.0
	4 '- 6 "	86.4
	5 '- 0 "	77.7
9 '- 6 "	3 '- 6 "	90.0
	4 '- 0 "	90.0
	4 '- 6 "	81.8
	5 '- 0 "	73.7
10 '- 0 "	3 '- 6 "	90.0
	4 '- 0 "	87.5
	4 '- 6 "	77.7
	5 '- 0 "	70.0

OPTION #4 : (4) FASTENERS CONNECTION

MAXIMUM MULLION SPAN "L" (Ft-in)	EFFECTIVE SPACING "b" (Ft-in)	MAXIMUM DESIGN LOAD W (psf) DOUBLE BUCK 3" Min. THK. (G=0.55) WOOD SUBSTRATE FASTENER S (1/2"ø)
9 '- 0 " or less	3 '- 6 "	90.0
	4 '- 0 "	90.0
	4 '- 6 "	90.0
	5 '- 0 "	90.0
9 '- 6 "	3 '- 6 "	90.0
	4 '- 0 "	90.0
	4 '- 6 "	90.0
	5 '- 0 "	90.0
10 '- 0 "	3 '- 6 "	90.0
	4 '- 0 "	90.0
	4 '- 6 "	90.0
	5 '- 0 "	90.0

OPTION # 1 (ELEVATION)
(1) FASTENER CONNECTION

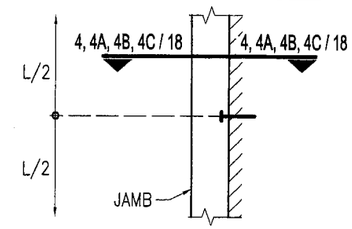

OPTION # 2 (ELEVATION)
(2) FASTENERS CONNECTION

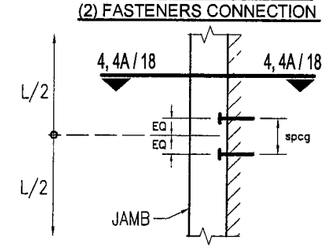

OPTION # 3 (ELEVATION)
(3) FASTENERS CONNECTION

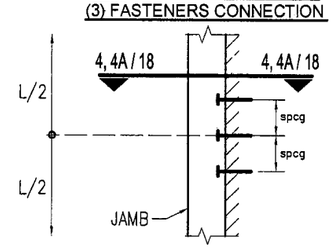

OPTION # 4 (ELEVATION)
(4) FASTENERS CONNECTION

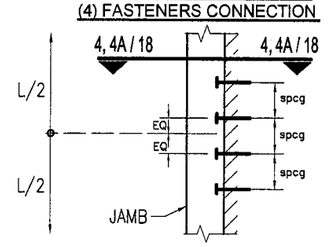

FASTENERS TYPES

N - 1/2"Ø HILTI KWIK BOLT 3 ANCHOR W/ 2" Min. EMBEDMENT INTO 6" Min. THICK POURED CONCRETE (Min. f'c = 3 ksi) BEYOND ANY FINISH MATERIAL, W/ 8" Min. SPACING & 3 5/8" MIN. EDGE DISTANCE.

O - 1/2"Ø HILTI HUS-H SCREW ANCHOR W/ 3" Min. EMBEDMENT INTO POURED CONCRETE (Min. f'c = 3 ksi) BEYOND ANY FINISH MATERIAL, W/ 6" Min. SPACING & 5" MIN. EDGE DISTANCE.

P - 1/2"Ø HILTI KWIK BOLT 3 ANCHOR W/ 2 1/2" Min. EMBEDMENT INTO GROUT FILLED CONCRETE BLOCK BEYOND ANY FINISH MATERIAL, W/ 8" Min. SPACING & 4" MIN. EDGE DISTANCE.

Q - 1/2"Ø HILTI HUS-H SCREW ANCHOR W/ 3" Min. EMBEDMENT INTO GROUT FILLED CONCRETE BLOCK BEYOND ANY FINISH MATERIAL, W/ 8" Min. SPACING & 4" MIN. EDGE DISTANCE.

R - 3/8"Ø TYPE "F" BOLT TO 1/4" Min. THK. ASTM A-36 STEEL W/ 2" Min. SPACING & 2" MIN. EDGE DISTANCE OR 1/2"Ø -13 SAE GRADE 5 GALVANIZED STEEL HHB THRU BOLT W/ NUT & LOCK WASHER.

S - 1/2"Ø LAG SCREWS TO DOUBLE BUCK (G=0.55) W/ 3" Min. PENETRATION INTO WOOD W/ 2" Min. SPACING & 2" MIN. EDGE DISTANCE.

FLORIDA BUILDING CODE (High Velocity Hurricane Zone)

SERIES FG-5000 FLUSH GLAZED ALUMINUM WINDOW
WALL SYSTEM LARGE & SMALL MISSILE
IMPACT LAMINATED GLASS

DRAWN BY L.G. | 05/14/09 DATE | 09-074 DRAWING No | SHEET 20 OF 22

Oldcastle Glass®
Engineered Products
803 AIRPORT RD. TERRELL TX 75160
PHONE: (972) 551-6100

REV. No	DESCRIPTION	DATE	REV. No	DESCRIPTION	DATE

© 2009 TILTECO INC.

TILTECO INC.
TILLIT TESTING & ENGINEERING COMPANY
5355 N.W. 36th. St., Ste. 305, VIRGINIA GARDENS, FLORIDA 33166
Phone : (305)871-1530 . Fax : (305)871-1531
e-mail: titteco@aol.com
EB-0006719
WALTER A. TILLIT Jr., P.E.
FLORIDA Lic. # 44167

P.E. STAMP

MIAMI-DADE STAMP

Approved as complying with the Florida Building Code
Date Nov. 18, 2009
NOA# 09-0721.03
Miami-Dade County Product Control
By

CORNER DETAIL AT JAMB

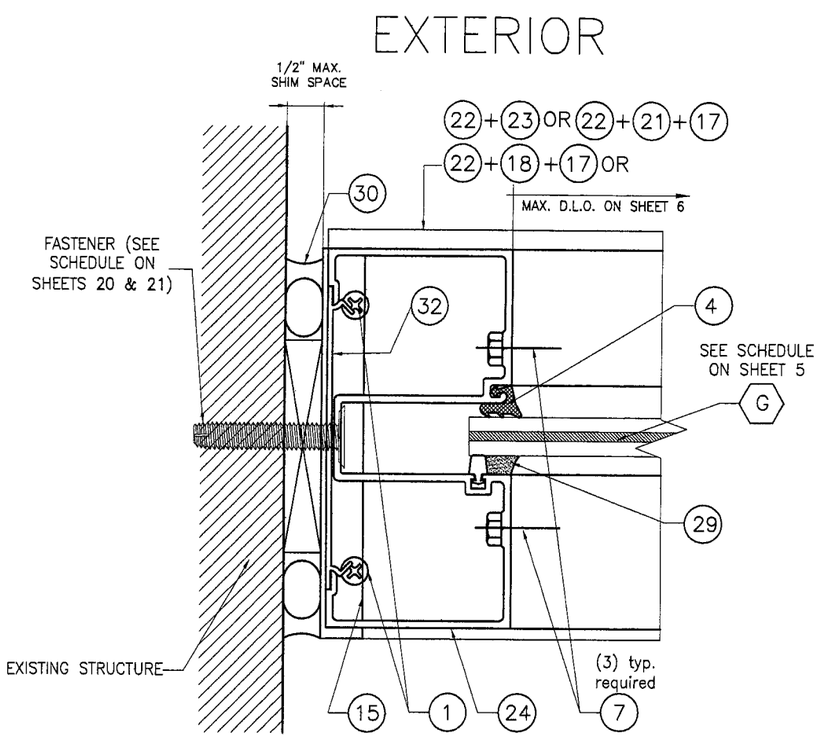

4D
JAMB PLAN

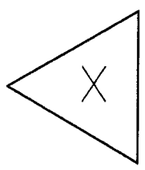

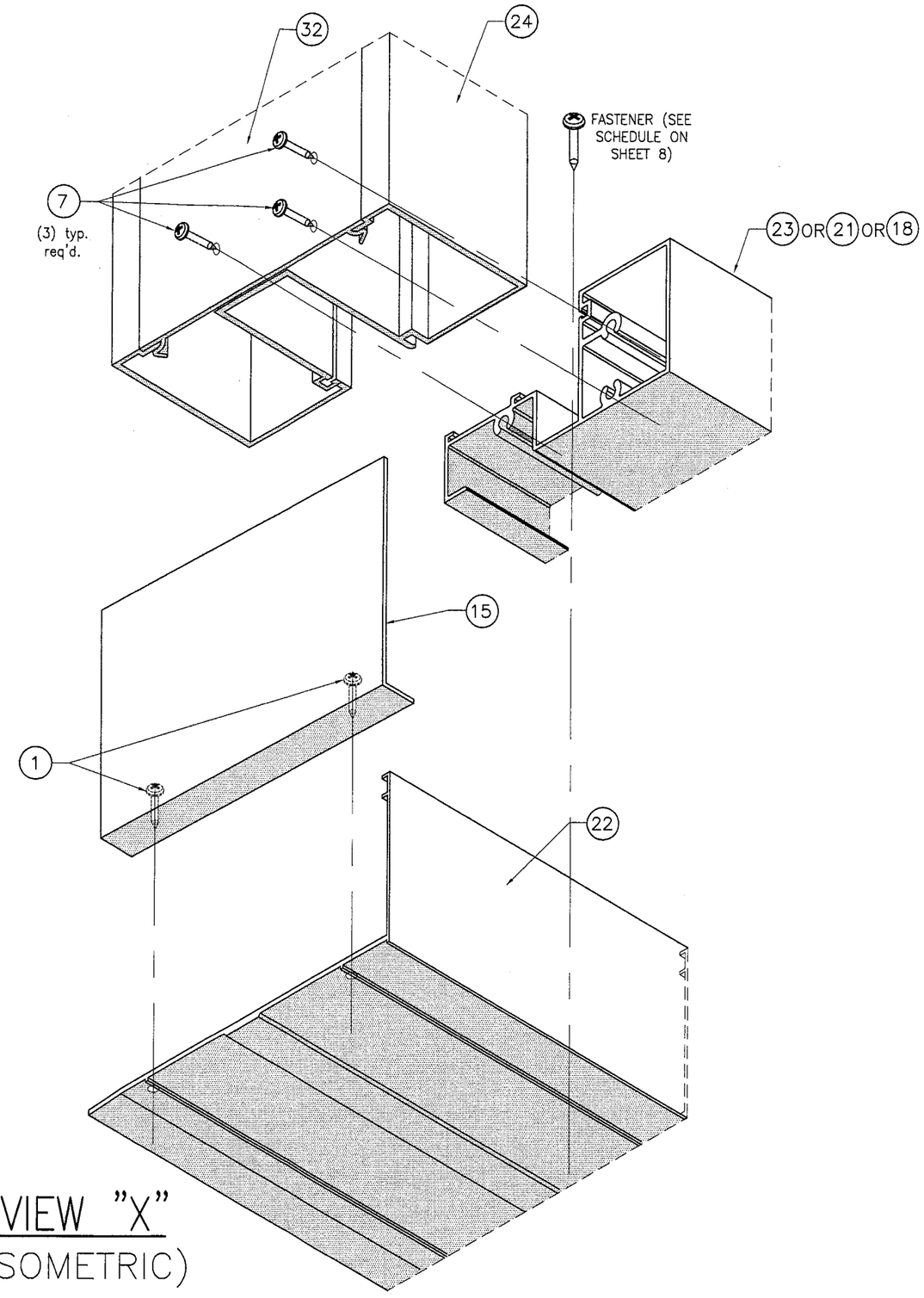

VIEW "X"
(ISOMETRIC)

FLORIDA BUILDING CODE (High Velocity Hurricane Zone)

SERIES FG-5000 FLUSH GLAZED ALUMINUM WINDOW WALL SYSTEM LARGE & SMALL MISSILE IMPACT LAMINATED GLASS

DRAWN BY M.C.V.

05/14/09 DATE

09-074 DRAWING No

SHEET 21 OF 22

Oldcastle Glass®
Engineered Products
803 AIRPORT RD. TERRELL TX 75160
PHONE: (972) 551-6100

REV. No	DESCRIPTION	DATE	REV. No	DESCRIPTION	DATE

© 2009 TILTECO INC.

TILTECO INC.
TILLIT TESTING & ENGINEERING COMPANY
6355 N.W. 36th. St., Ste. 305, VIRGINIA GARDENS, FLORIDA 33166
Phone : (305)871-1530 . Fax : (305)871-1531
e-mail: tilteco@aol.com
EB-0006719
WALTER A. TILLIT Jr., P.E.
FLORIDA Lic. # 44167

P.E. STAMP

MIAMI-DADE STAMP

Approved as complying with the Florida Building Code
Date Nov. 18th 2009
NOA# 09-0121.03
Miami Dade Product Control
Section
By

DOOR JAMB MULLION CONNECTIONS TO WINDOW WALL SYSTEM AT HEAD & SILL

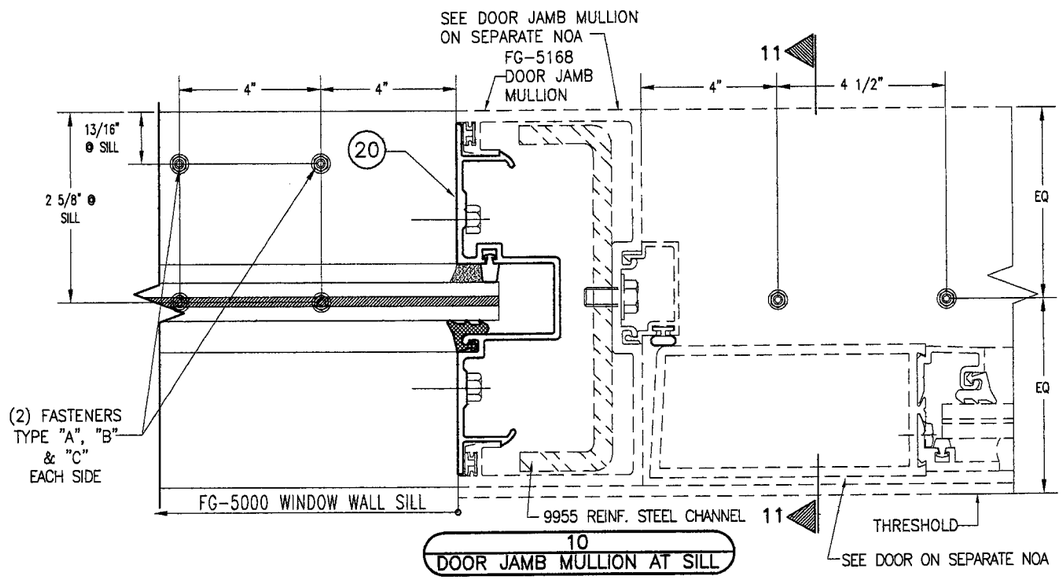

10
DOOR JAMB MULLION AT SILL

CONNECTION DETAIL APPLICABLE TO POURED CONCRETE OR STEEL

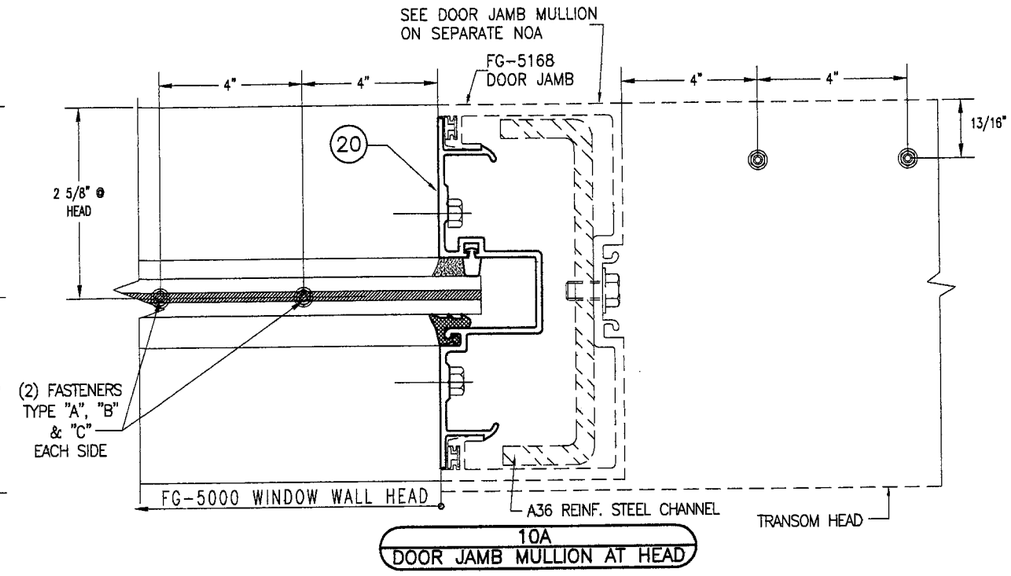

10A
DOOR JAMB MULLION AT HEAD

CONNECTION DETAIL APPLICABLE TO POURED CONCRETE OR STEEL

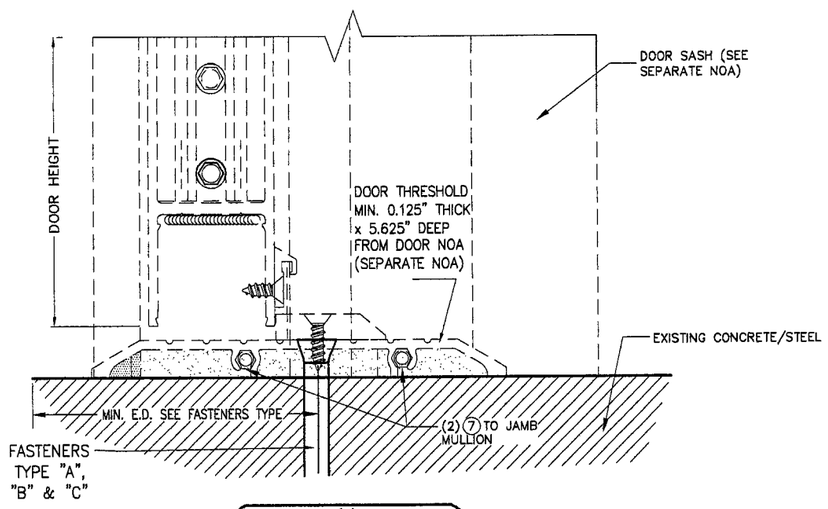

11
DOOR THRESHOLD CONN. TO JAMB MULLION

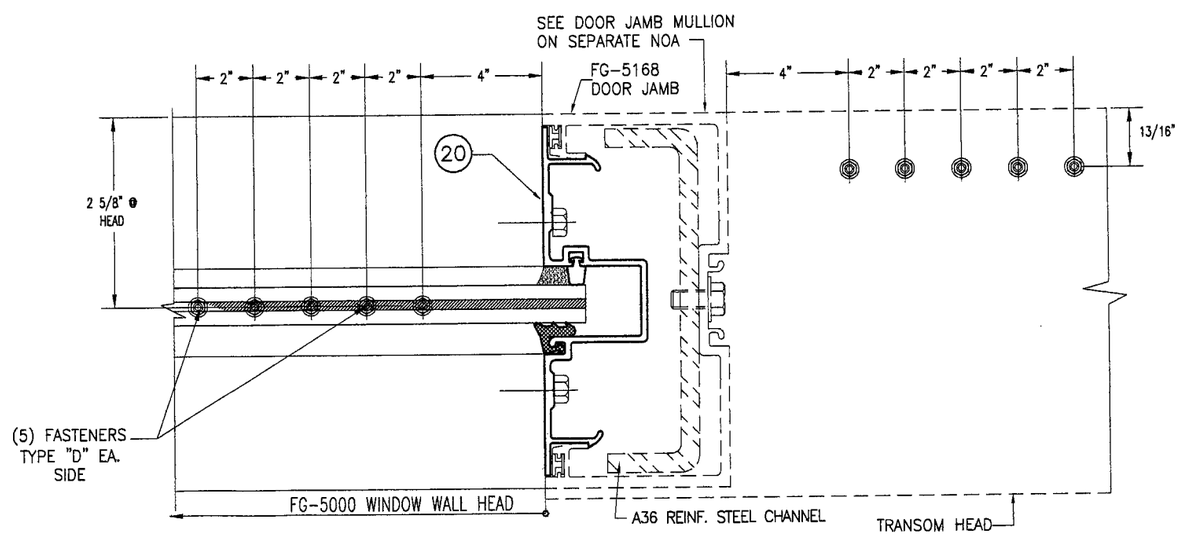

10A
DOOR JAMB MULLION AT HEAD

CONNECTION DETAIL APPLICABLE TO WOOD ONLY

FASTENERS TYPES

A - 3/8"Ø HILTI KWIK BOLT TZ ANCHOR W/ 2" Min. EMBEDMENT INTO 6" Min. THICK POURED CONCRETE (Min. f'c = 3 ksi) BEYOND ANY FINISH MATERIAL, W/ 4" MIN. EDGE DISTANCE.

B - 1/2"Ø HILTI HUS-H SCREW ANCHOR W/ 2" Min. EMBEDMENT INTO POURED CONCRETE (Min. f'c = 3 ksi) BEYOND ANY FINISH MATERIAL, W/ 5" MIN. EDGE DISTANCE.

C - 3/8"Ø TYPE "F" BOLT TO 1/4" Min. THK. ASTM A-36 STEEL W/ 3/4" MIN. EDGE DISTANCE OR 3/8"Ø -13 SAE GALVANIZED STEEL GRADE 5 HHB THRU BOLT W/ NUT & LOCK WASHER.

D - 1/2"Ø LAG SCREWS TO DOUBLE WOOD BUCK(G=0.55) W/ 3" Min. PENETRATION INTO WOOD W/ 2" MIN. EDGE DISTANCE.

FLORIDA BUILDING CODE (High Velocity Hurricane Zone)

SERIES FG-5000 FLUSH GLAZED ALUMINUM WINDOW WALL SYSTEM LARGE & SMALL MISSILE IMPACT LAMINATED GLASS

DRAWN BY M.C.V./I.A.

05/14/09 DATE

09-074 DRAWING No

SHEET 22 OF 22

Oldcastle Glass®
Engineered Products
803 AIRPORT RD. TERRELL TX 75160
PHONE: (972) 551-6100

REV. No	DESCRIPTION	DATE	REV. No	DESCRIPTION	DATE
	GENERAL	10/9/09			

© 2009 TILTECO INC.

TILTECO INC.
TILLIT TESTING & ENGINEERING COMPANY
6355 N.W. 36th. St. Ste. 305, VIRGINIA GARDENS, FLORIDA 33166
Phone : (305)871-1530 , Fax : (305)871-1531
e-mail: tilteco@aol.com
EB-0006719
WALTER A. TILLIT Jr., P.E.
FLORIDA Lic. # 44167

P.E. STAMP

10/23/09

MIAMI-DADE STAMP

Approved as complying with the Florida Building Code
Date Nov. 18, 2009
NOA# 09-0721.03
Miami-Dade Product Control Division
By: