MIAMI-DADE COUNTY
BUILDING CODE COMPLIANCE OFFICE (BCCO)
PRODUCT CONTROL DIVISION

MIAMI-DADE COUNTY, FLORIDA
METRO-DADE FLAGLER BUILDING
140 WEST FLAGLER STREET, SUITE 1603
MIAMI, FLORIDA 33130-1563
(305) 375-2901 FAX (305) 372-6339
www.miamidade.gov/buildingcode

NOTICE OF ACCEPTANCE (NOA)

Oldcastle Glass Engineered Products
803 Airport Road
Terrell, TX 75160

SCOPE:

This NOA is being issued under the applicable rules and regulations governing the use of construction materials. The documentation submitted has been reviewed by Miami-Dade County Product Control Division and accepted by the Board of Rules and Appeals (BORA) to be used in Miami Dade County and other areas where allowed by the Authority Having Jurisdiction (AHJ).

This NOA shall not be valid after the expiration date stated below. The Miami-Dade County Product Control Division (In Miami Dade County) and/or the AHJ (in areas other than Miami Dade County) reserve the right to have this product or material tested for quality assurance purposes. If this product or material fails to perform in the accepted manner, the manufacturer will incur the expense of such testing and the AHJ may immediately revoke, modify, or suspend the use of such product or material within their jurisdiction. BORA reserves the right to revoke this acceptance, if it is determined by Miami-Dade County Product Control Division that this product or material fails to meet the requirements of the applicable building code. This product is approved as described herein, and has been designed to comply with the Florida Building Code, including the High Velocity Hurricane Zone.

DESCRIPTION: Series "HR-251" Aluminum Curtain Wall System – S.M.I.

APPROVAL DOCUMENT: Drawing No. **09-070**, titled "HR-251 Captured Curtain Wall System Small Missile Impact Insulated Glass", sheets 1 through 36 of 36, dated 05/06/09, with revision 2 dated 2/25/10, prepared by Tilteco, Inc., signed and sealed by Walter A. Tillit, Jr., P.E., bearing the Miami-Dade County Product Control Approval stamp with the Notice of Acceptance number and approval date by the Miami-Dade County Product Control Division.

MISSILE IMPACT RATING: Small Missile Impact Resistant

LABELING: Each unit shall bear a permanent label with the manufacturer's name or logo, city, state and following statement: "Miami-Dade County Product Control Approved", unless otherwise noted herein.

RENEWAL of this NOA shall be considered after a renewal application has been filed and there has been no change in the applicable building code negatively affecting the performance of this product.

TERMINATION of this NOA will occur after the expiration date or if there has been a revision or change in the materials, use, and/or manufacture of the product or process. Misuse of this NOA as an endorsement of any product, for sales, advertising or any other purposes shall automatically terminate this NOA. Failure to comply with any section of this NOA shall be cause for termination and removal of NOA.

ADVERTISEMENT: The NOA number preceded by the words Miami-Dade County, Florida, and followed by the expiration date may be displayed in advertising literature. If any portion of the NOA is displayed, then it shall be done in its entirety.

INSPECTION: A copy of this entire NOA shall be provided to the user by the manufacturer or its distributors and shall be available for inspection at the job site at the request of the Building Official.

This NOA consists of this page 1 and evidence pages E-1 and E-2, as well as approval document mentioned above.

The submitted documentation was reviewed by **Manuel Perez, P.E.**

MIAMI-DADE COUNTY APPROVED

NOA No. 09-0721.04
Expiration Date: March 24, 2015
Approval Date: March 24, 2010

Oldcastle Glass Engineered Products

NOTICE OF ACCEPTANCE: EVIDENCE SUBMITTED

A. DRAWINGS

1. Manufacturer's die drawings and sections.
2. Drawing No **09-070**, Sheets 1 through 36 of 36, titled "HR-251 Captured Curtain wall System Small Missile Impact Insulated Glass", dated 05/06/09, prepared by Tilteco, Inc., signed and sealed by Walter A. Tillit, Jr., P.E.

B. TESTS

1. Test reports on: 1) Large Missile Impact Test per FBC, TAS 201-94
   2) Cyclic Wind Pressure Loading per FBC, TAS 203-94
   along with marked-up drawings and installation diagram of Vistawall HR-251 captured, wet glazed, curtain wall system, prepared by Architectural Testing, Inc., Test Report No. **ATITX-96930.01-801-18**, specimens 1, 2 and 3, dated 02/11-15/10, signed and sealed by Joseph A. Reed, P.E.
2. Test reports on: 1) Air Infiltration Test, per FBC, TAS 202-94
   2) Uniform Static Air Pressure Test, Loading per FBC TAS 202-94
   3) Water Resistance Test, per FBC, TAS 202-94
   4) Large Missile Impact Test per FBC, TAS 201-94
   5) Cyclic Wind Pressure Loading per FBC, TAS 203-94
   along with marked-up drawings and installation diagram of Vistawall HR-251 captured curtain wall system, prepared by Hurricane Test Laboratory, LLC, Test Report No. **HTL-0105-0117-05**, specimen **E3**, dated 09/08-13/05, signed and sealed by Vinu J. Abraham, P.E.
3. Test reports on: 1) Air Infiltration Test, per FBC, TAS 202-94
   2) Uniform Static Air Pressure Test, Loading per FBC TAS 202-94
   3) Water Resistance Test, per FBC, TAS 202-94
   4) Small Missile Impact Test per FBC, TAS 201-94
   5) Large Missile Impact Test per FBC, TAS 201-94
   6) Cyclic Wind Pressure Loading per FBC, TAS 203-94
   along with marked-up drawings and installation diagram of Vistawall HR-251 captured curtain wall system, prepared by Hurricane Test Laboratory, LLC, Test Report No. **HTL-0105-0903-08**, specimens: **E2**, **E6**, **E6A** and **E8**, dated 09/18/08 to 12/17/08, signed and sealed by Vinu J. Abraham, P.E.

C. CALCULATIONS

1. Anchor verification calculations and structural analysis, complying with FBC-2007, prepared by Tilteco, Inc., dated 5/6/09 revised on 2/25/10, signed and sealed by Walter A. Tillit, Jr., P.E.
   Complies with ASTM E1300-02/04

Manuel Perez, P.E.
Product Control Examiner
NOA No. 09-0721.04
Expiration Date: March 24, 2015
Approval Date: March 24, 2010

NOTICE OF ACCEPTANCE: EVIDENCE SUBMITTED

D. QUALITY ASSURANCE

1. Miami Dade Building Code Compliance Office (BCCO).

E. MATERIAL CERTIFICATIONS

1. Notice of Acceptance No. **09-0312.02** issued to E.I. DuPont DeNemours & Co., Inc. for their **"DuPont Butacite® PVB, Interlayer"** dated 05/13/09, expiring on 12/11/10.
2. Notice of Acceptance No. **06-0216.06** issued to Solutia Inc. for their "**Saflex IIIG Clear or colored interlayer**" dated 05/04/06, expiring on 05/21/11.

F. STATEMENTS

1. Statement letter of conformance, dated June 23, 2009, signed and sealed by Walter A. Tillit, Jr., P.E.
2. Statement letter of no financial interest, dated June 23, 2009, signed and sealed by Walter A. Tillit, Jr., P.E.
3. Laboratory compliance letter for Test Report No. **HTL-0105-0117-05** and **HTL-0105-0903-08**, issued by Hurricane Test Laboratory, Inc., dated 3/23/09, signed and sealed by Vinu J. Abraham, P.E.

G. OTHERS

1. None

Manuel Perez, P.E.
Product Control Examiner
NOA No. 09-0721.04
Expiration Date: March 24, 2015
Approval Date: March 24, 2010

PRODUCT APPROVAL FOR HR-251 IMPACT-RESISTANT CAPTURED CURTAIN WALL SYSTEM WITH MULTIPLE GLAZING INFILLS FOR USE IN HURRICANE ZONES REQUIRING SMALL MISSILE IMPACT PROTECTION.

GENERAL NOTES:

1. HR-251 CAPTURED CURTAIN WALL SYSTEM SMALL MISSILE IMPACT INSULATED GLASS, SHOWN ON THIS PRODUCT APPROVAL DOCUMENT (P.A.D.) HAS BEEN VERIFIED FOR COMPLIANCE IN ACCORDANCE WITH THE 2007 EDITION OF THE FLORIDA BUILDING CODE.
   CURTAIN WALL MAY BE INSTALLED WITHIN HIGH VELOCITY HURRICANE ZONES.
   DESIGN WIND LOADS SHALL BE DETERMINED AS PER SECTION 1620 OF THE ABOVE MENTIONED CODE. IN ORDER TO VERIFY THAT ANCHORS ON THIS P.A.D., AS TESTED, WERE NOT OVERSTRESSED, A 33% INCREASE IN ALLOWABLE STRESS FOR WIND LOADS WAS **NOT** USED IN THEIR ANALYSIS.
   THIS PRODUCT'S ADEQUACY FOR IMPACT AND CYCLIC RESISTANCE HAS BEEN VERIFIED IN ACCORDANCE WITH SECTION 1626 OF THE ABOVE MENTIONED CODE AS PER PROTOCOLS TAS-201, TAS-202, TAS-203, PER HURRICANE TEST LABORATORY REPORTS # 0105-0903-08, 0105-0117-05, 0105-0210-04 (DOOR CERTIFICATION); PER ARCHITECTURAL TESTING LAB. REPORT # 96930.02-801-18 AND AS PER SUBMITTED STRUCTURAL CALCULATIONS, PERFORMED AS PER SECTION 1612 OF THE FLORIDA BUILDING CODE.

2. MAXIMUM DESIGN PRESSURE RATING FOR THIS CURTAIN WALL SHALL BE AS SHOWN ON SHEETS 8, 9, 10, 12, 13 AND 14 THRU 17.

3. THIS PRODUCT WILL NOT REQUIRE A HURRICANE PROTECTION DEVICE FOR INSTALLATIONS ABOVE 30'-0" ABOVE GRADE.

4. THIS PRODUCT IS APPROVED FOR AIR/WATER INFILTRATION (15.0 PSF).

5. HR-251 CAPTURED CURTAIN WALL SYSTEM SMALL MISSILE IMPACT INSULATED GLASS SHALL COMPLY WITH SECTIONS 2411.4.1 AND 2411.4.2 OF THE FLORIDA BUILDING CODE.

6. ALL STEEL FRAMING SHALL BE WELDED IN ACCORDANCE WITH THE AMERICAN WELDING SOCIETY A.W.S. D.1.1 REGULATIONS. USE CERTIFIED WELDERS. USE E-70XX ELECTRODES. ALL JOINT WELDING BETWEEN ANGLES AND STEEL STRUCTURE SHALL BE 3/16" FILLET WELD TYPE.

7. PROVIDE 1/2" MAX. LOAD BEARING SHIM SPACE (TYP.), WHEN ALLOWED BY THIS P.A.D.

8. SEE ANCHOR SCHEDULES ON SHEETS 12, 13 AND 14 THRU 17 FOR ANCHOR TYPE IDENTIFICATION AND SPACING.

9. REMAINING COMPONENTS FOR THIS CURTAIN WALL SYSTEM SHALL BE AS INDICATED ON BILL OF MATERIALS, SHEETS 4 AND 5 OF THIS DRAWING.

10. ALL ALUMINUM EXTRUSIONS IN CONTACT WITH STEEL AND CONCRETE SHALL COMPLY WITH SECTIONS 2003.8.4.2 AND 2003.8.4.4 OF THE FLORIDA BUILDING CODE, RESPECTIVELY.

11. SHOP DRAWINGS PREPARED BASED ON THIS APPROVAL AND TAKING INTO ACCOUNT THE SPECIFIC JOB CONDITIONS, SHALL BE SUBMITTED TO THE BUILDING OFFICIAL AS PART OF THE PERMIT DOCUMENTS.

12. STRUCTURAL STEEL NOTED ON THESE DRAWINGS AS "STEEL BY OTHERS" MUST WITHSTAND THE LOADS IMPOSED BY THE CURTAIN WALL SYSTEM.

13. CURTAIN WALL MANUFACTURER'S LABEL SHALL BE PLACED ON A READILY VISIBLE LOCATION. ONE LABEL SHALL BE PLACED FOR EVERY UNIT. LABEL SHALL READ AS FOLLOWS:

    Oldcastle Glass®
    Engineered Products

    TERRELL TX.
    MIAMI-DADE COUNTY PRODUCT CONTROL APPROVED.

14. (a) THIS P.A.D. PREPARED BY THIS ENGINEER IS GENERIC AND DOES NOT PROVIDE INFORMATION FOR A SITE SPECIFIC PROJECT; i.e. WHERE THE SITE CONDITIONS DEVIATE FROM THE P.A.D.

    (b) CONTRACTOR TO BE RESPONSIBLE FOR THE SELECTION, PURCHASE AND INSTALLATION INCLUDING LIFE SAFETY OF THIS PRODUCT, BASED ON THIS P.A.D., PROVIDED HE/SHE DOES NOT DEVIATE FROM THE CONDITIONS DETAILED ON THIS DOCUMENT. CONSTRUCTION SAFETY AT SITE IS THE CONTRACTOR'S RESPONSIBILITY.

    (c) THIS P.A.D. WILL BE CONSIDERED INVALID IF ALTERED BY ANY MEANS.

    (d) SITE SPECIFIC PROJECTS SHALL BE PREPARED BY A FLORIDA REGISTERED ENGINEER OR ARCHITECT WHICH WILL BECOME THE ENGINEER OF RECORD (E.O.R.) FOR THE PROJECT AND WHO WILL BE RESPONSIBLE FOR THE PROPER USE OF THE P.A.D. ENGINEER OF RECORD, ACTING AS DELEGATED ENGINEER TO THE P.A.D. ENGINEER, SHALL SUBMIT TO THIS LATTER THE SITE SPECIFIC DRAWINGS FOR REVIEW.

    (e) ORIGINAL P.A.D. SHALL BEAR THE DATE AND ORIGINAL SEAL AND SIGNATURE OF THE PROFESSIONAL ENGINEER OF RECORD THAT PREPARED IT.

INDEX:

SHEET 1: GENERAL NOTES, INDEX AND INSTRUCTIONS.
SHEET 2: HR-251 IMPACT RESISTANT CAPTURED CURTAIN WALL SYSTEM COMPONENTS.
SHEET 3: HR-251 IMPACT RESISTANT CAPTURED CURTAIN WALL SYSTEM COMPONENTS (CONTINUED).
SHEET 4: BILL OF MATERIALS.
SHEET 5: BILL OF MATERIALS (CONTINUED).
SHEET 6: ISOMETRIC ELEVATION FOR HR-251 IMPACT RESISTANT CAPTURED CURTAIN WALL SYSTEM.
SHEET 7: TYPICAL GLAZING DETAILS.
SHEET 8: MAXIMUM DESIGN WIND LOAD SCHEDULE FOR A GIVEN GLASS TYPE AND GLASS PANEL DIMENSIONS.
SHEET 9: MAX. DESIGN PRESSURE RATING FOR SINGLE SPAN STANDARD AND CORNER MULLIONS.
SHEET 10: MAX. DESIGN PRESSURE RATING FOR TWIN SPAN STANDARD AND CORNER MULLIONS.
SHEET 11: OPTIONS FOR TWIN SPAN STANDARD AND CORNER MULLIONS INSTALLATION.
SHEET 12: MAXIMUM PRESSURE RATING FOR SINGLE SPAN (HEAD & SILL) & TWIN SPAN (SILL ONLY) MULLION CONNECTIONS.
SHEET 13: MAXIMUM PRESSURE RATING FOR TWIN SPAN MULLION HEAD ANCHOR CONNECTIONS.
SHEET 14: MAXIMUM PRESSURE RATING FOR JAMBS AT SINGLE SPAN CURTAIN WALL FASTENED W/ 3/8"ø FASTENERS.
SHEET 15: MAXIMUM PRESSURE RATING FOR JAMBS AT TWIN SPAN CURTAIN WALL FASTENED W/ 3/8"ø FASTENERS.
SHEET 16: MAXIMUM PRESSURE RATING FOR JAMBS AT SINGLE SPAN CURTAIN WALL FASTENED W/ 1/2"ø FASTENERS.
SHEET 17: MAXIMUM PRESSURE RATING FOR JAMBS AT TWIN SPAN CURTAIN WALL FASTENED W/ 1/2"ø FASTENERS.
SHEET 18: HEAD CONNECTION DETAILS (SIDE VIEWS).
SHEET 19: HORIZONTAL CONNECTION DETAILS (SIDE VIEWS).
SHEET 20: SILL CONNECTION DETAILS (SIDE VIEWS).
SHEET 21: HORIZONTAL SECTIONS AT STANDARD MULLION DETAILS (PLAN).
SHEET 22: JAMB CONNECTIONS AT HORIZONTALS (PLAN).
SHEET 23: CORNER MULLION DETAILS (PLAN).
SHEET 24: JAMBS CONNECTIONS AT INSIDE CORNER (PLAN).
SHEET 25: SILL & HEAD CONNECTION DETAILS FOR SINGLE SPAN & SILL CONNECTION DETAIL FOR TWIN SPAN (PLANS).
SHEET 26: OPTION #1 FOR HEAD CONNECTION OF TWIN SPAN STANDARD MULLIONS.
SHEET 27: OPTION #2 FOR HEAD CONNECTION OF TWIN SPAN STANDARD MULLIONS.
SHEET 28: HEAD CONNECTION OF TWIN SPAN JAMBS.
SHEET 29: HEAD CONNECTION DETAIL FOR TWIN SPAN CORNER MULLION,
SHEET 30: MULLION AND JAMB SPLICES ON TWIN SPAN ONLY (PLAN).
SHEET 31: MULLION AND JAMB SPLICES ON TWIN SPAN ONLY (SIDE VIEW)
SHEET 32: CORNER MULLION SPLICE AT TWIN SPAN (PLAN).
SHEET 33: STANDARD AND CORNER MULLION CONNECTION TO EXISTING INTERMEDIATE FLOOR STRUCTURE W/ DEAD LOAD ANCHORS.
SHEET 34: CORNER MULLION CONNECTION TO EXISTING INTERMEDIATE FLOOR STRUCTURE W/ DEAD LOAD ANCHORS (PLAN).
SHEET 35: DOOR HEADER CONNECTION TO CURTAIN WALL HORIZONTALS & DOOR SILL CONNECTION TO POURED CONCRETE STRUCTURE AND TO ADJACENT CURTAIN WALL MULLION "F".
SHEET 36: DOOR JAMBS CONNECTION TO CURTAIN WALL.

INSTRUCTIONS:

STEP 1: DETERMINE DESIGN WIND LOAD REQUIREMENTS BASED ON WIND VELOCITY, BUILDING HEIGHT, WIND ZONE, USING APPLICABLE ASCE 7-05 STANDARD.

STEP 2: GO TO SCHEDULE ON SHEET 8 TO DETERMINE MAXIMUM DESIGN LOAD "W" (psf) CAPACITY OF DESIRED GLASS SIZE BASED ON GLASS PANEL DIMENSIONS.

STEP 3: DETERMINE MAXIMUM MULLION AND JAMB SPAN "L"(FT) FOR A GIVEN MULLION EFFECTIVE SPACING "b", FOR SINGLE AND TWIN SPANS ON SCHEDULES ON SHEETS 9 AND 10.

STEP 4: USING SCHEDULES ON SHEETS 12, 13 AND 14 THRU 17 SELECT ANCHOR OPTION FOR MULLIONS AND JAMBS WITH DESIGN PRESSURE RATING NO MORE THAN DESIGN LOAD SPECIFIED IN STEP 1.

STEP 5: USING SCHEDULE ON SHEET 19, VERIFY MAXIMUM DESIGN PRESSURE RATING OF HORIZONTALS (IF USED) AND HORIZONTAL EXPANSION.

STEP 6: THE LOWEST VALUE OF DESIGN PRESSURE RATING RESULTING FROM STEPS 2, 3, 4 AND 5 SHALL APPLY TO THE ENTIRE SYSTEM.

FLORIDA BUILDING CODE (High Velocity Hurricane Zone)

HR-251 CAPTURED CURTAIN WALL SYSTEM
SMALL MISSILE IMPACT INSULATED GLASS

DRAWN BY M.C.V./F.P.
05/06/09 DATE
09-070 DRAWING No
SHEET 1 OF 36

Oldcastle Glass®
Engineered Products
803 AIRPORT RD. TERRELL TX 75160
PHONE: (972) 551-6100

REV. No	DESCRIPTION	DATE
1	GENERAL	10/9/08
2	TEST REPORT ADDED	2/25/10
3		
4		

© 2009 TILTECO INC.

TILTECO INC.
TILLIT TESTING & ENGINEERING COMPANY
1855 N.W. 36th. St. Ste. 305, VIRGINIA GARDENS, FLORIDA 33166
Phone : (305)871-1530 . Fax : (305)871-1531
e-mail: tilteco@aol.com
EB-0006719
WALTER A. TILLIT JR., P.E.
FLORIDA Lic. # 44167

WALTER A. TILLIT JR. LICENSE NO. 44167 STATE OF FLORIDA PROFESSIONAL ENGINEER

MIAMI-DADE STAMP

Approved as complying with the Florida Building Code
Date 10/21/09
NOA# 09-0721.04
Miami Dade Product Control
Signature
By: Manuel Perez

HR-251 IMPACT RESISTANT CAPTURED CURTAIN WALL SYSTEM COMPONENTS

SCALE : 1/4" = 1"

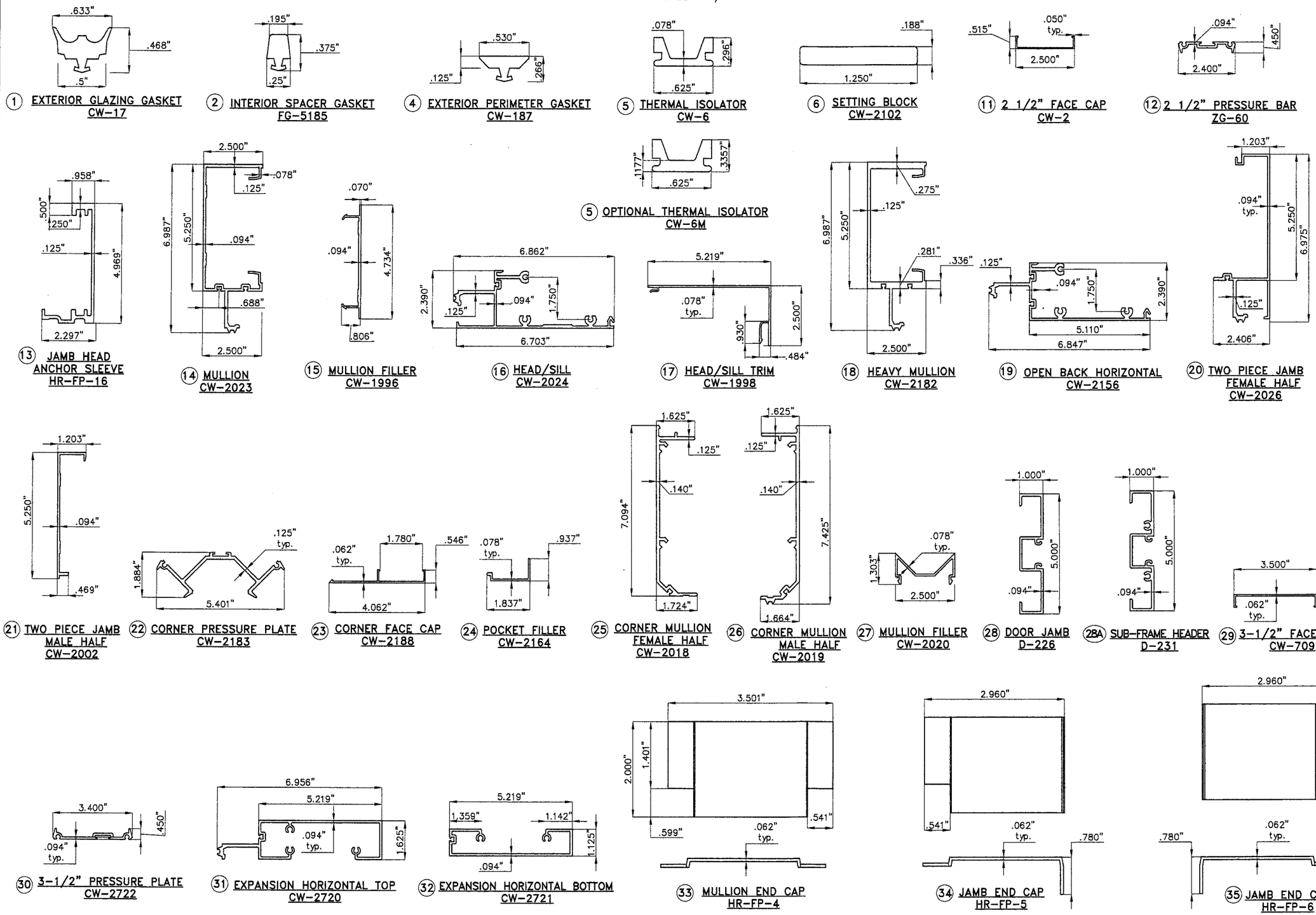

FLORIDA BUILDING CODE (High Velocity Hurricane Zone)

DRAWN BY M.C.V.

05/06/09 DATE

09-070 DRAWING No

SHEET 2 OF 36

HR-251 CAPTURED CURTAIN WALL SYSTEM
SMALL MISSILE IMPACT INSULATED GLASS

Oldcastle Glass®
Engineered Products
803 AIRPORT RD. TERRELL TX 75160
PHONE: (972) 551-6100

REV. No	DESCRIPTION	DATE	REV. No	DESCRIPTION	DATE
1	GENERAL	10/12/09	3		
2			4		

© 2009 TILTECO INC.

TILTECO INC.
TILLIT TESTING & ENGINEERING COMPANY
6620 N.W. 36th. St., Ste. 305, VIRGINIA GARDENS, FLORIDA 33166
Phone : (305)871-1530 . Fax : (305)871-1531
e-mail: tilteco@aol.com
EB-0006719
WALTER A. TILLIT Jr., P.E.
FLORIDA Lic. # 44167

WALTER A. TILLIT JR. LICENSE No. 44167 STATE OF FLORIDA PROFESSIONAL ENGINEER

MIAMI-DADE STAMP

Approved as complying with the Florida Building Code
Date MARCH 24, 2010
Product Control Number 09-0722.04
Product Control
By

HR-251 IMPACT RESISTANT CAPTURED CURTAIN WALL SYSTEM COMPONENTS (CONTINUED)

SCALE : 1/4" = 1"

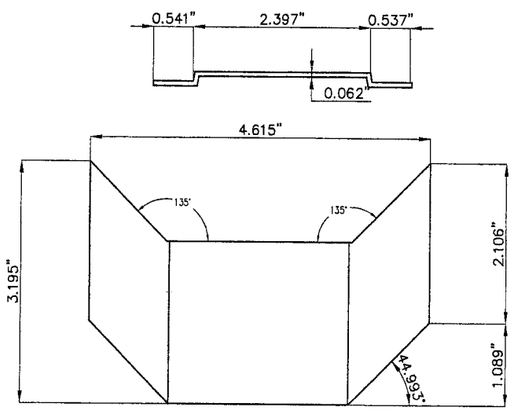

36 90 DEG. MULLION END CAP
HR-FP-8

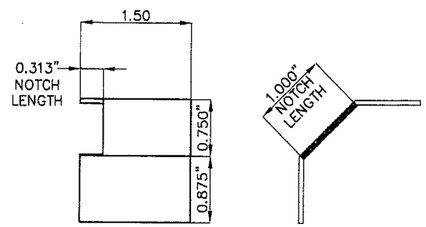

37 WATER DIVERTER
HR-FP-12

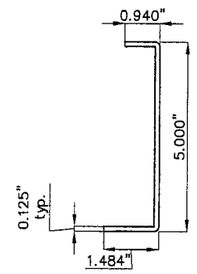

39 WALL JAMB SPLICE
FEMALE HALF
HR-FP-14

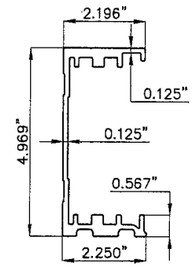

40 HEAD ANCHOR SLEEVE
HR-FP-15

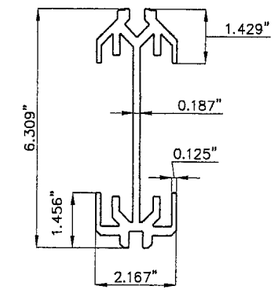

41 HEAD ANCHOR SLEEVE
CORNER HR-FP-17

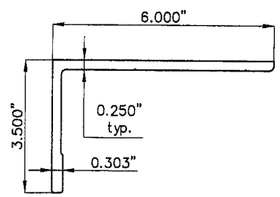

42 HEAD ANCHOR
HR-FP-24

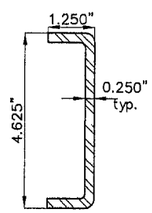

50 STEEL REINFORCING
FG5000-PP-8

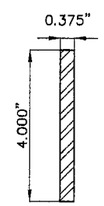

51 STEEL REINFORCING
RS-16

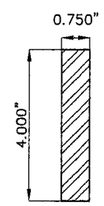

52 STEEL REINFORCING
RS-17

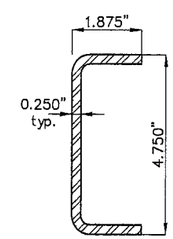

53 STEEL REINFORCING
RS-25

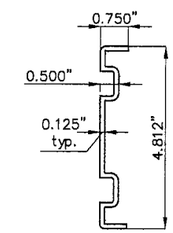

55 WALL JAMB SPLICE
MALE HALF
HR-FP-18

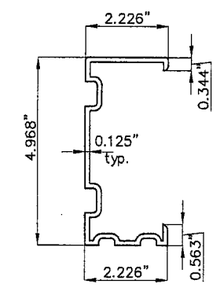

63 MULLION SPLICE
HR-FP-20

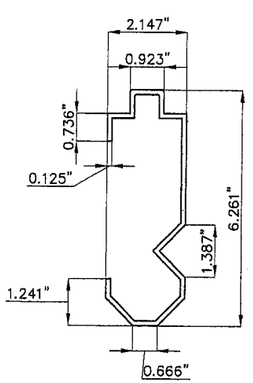

64 CORNER SPLICE
HR-FP-21

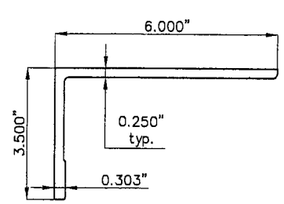

65 HEAD ANCHOR
CORNER LEFT
HR-FP-22

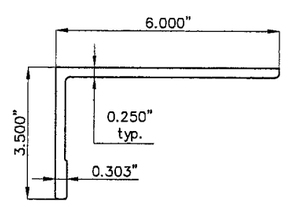

66 HEAD ANCHOR
CORNER RIGHT
HR-FP-23

FLORIDA BUILDING CODE (High Velocity Hurricane Zone)

HR-251 CAPTURED CURTAIN WALL SYSTEM
SMALL MISSILE IMPACT INSULATED GLASS

Oldcastle Glass®
Engineered Products
803 AIRPORT RD. TERRELL TX 75160
PHONE: (972) 551-6100

REV. No	DESCRIPTION	DATE
1		
2		
3		
4		

DRAWN BY M.C.V.
05/06/09 DATE
09-070 DRAWING No
SHEET 3 OF 36

© 2009 TILTECO INC.

TILTECO INC.
TILLIT TESTING & ENGINEERING COMPANY
N.W. 38th. St., Ste. 305, VIRGINIA GARDENS, FLORIDA 33166
Phone : (305)871-1530 . Fax : (305)871-1531
e-mail: tilteco@aol.com
EB-0006719
WALTER A. TILLIT Jr., P.E.
FLORIDA Lic. # 44167

P.E. STAMP
WALTER A. TILLIT JR. LICENSE NO. 44167 STATE OF FLORIDA PROFESSIONAL ENGINEER
3/13/2009

MIAMI-DADE STAMP
Approved as complying with the Florida Building Code
Date 11/06/09
NOA 09-0721.04
Miami-Dade Product Control
By

BILL OF MATERIALS

ITEM No.	PART NUMBER	DESCRIPTION	DIMENSIONS	MATERIAL	MANUFACTURER	NOTES
1.	CW-17	EXTERIOR GLAZING GASKET	.190 SPACE	VINYL	VARIES	70 DUROMETER
2.	FG-5185	INTERIOR SPACER GASKET	.25 X .375	SILICONE	VARIES	
3.	DOW 995	STRUCTURAL SILICONE	FILL SPACE (.25 x .56) TYP. MULL (.25 X .625) @CORNER	SILICONE	DOW CORNING	
4.	CW-187	EXTERIOR PERIMETER GASKET	.530 X .266	VINYL	VARIES	
5.	CW-6 OR CW-6M	THERMAL ISOLATOR	.625 X .296 OR .625 X .3357	RIGID VINYL	VARIES	
6.	CW-2102	SETTING BLOCK	1.250 X .188 X 4" LONG	EPDM	EPG	
7.	795	PERIMETER SEALANT	FILL SPACE	SILICONE	DOW CORNING	
8.	FS-8	ASSEMBLY SCREW	#14 X 1 HHSTS FS-322 (STALGARD COATED BY ELCO)	STEEL	VARIES	
9.	FS-7	ASSEMBLY SCREW	#10 X 3/4" PFH TYPE B	STEEL	VARIES	(2)@ EA. HORIZ. 12" O.C.@ 2PC JAMB
10.	FS-322	PRESSURE PLATE SCREW	#12-14 X 1" HWH #3 FS-322 (STALGARD COATED BY ELCO)	STEEL	VARIES	(1) @ EA. 24" O.C.
11.	CW-2	FACE CAP	.515 X 2.5 X .050	6063-T6 ALUMINUM	OLDCASTLE GLASS VISTAWALL	
12.	ZG-60	2 1/2" PRESSURE BAR	2.40 X .450 X .094	6063-T6 ALUMINUM	OLDCASTLE GLASS VISTAWALL	SEE NOTE: #1
13.	HR-FP-16	JAMB HEAD ANCHOR SLEEVE	2 3/16" X 5 5/16" X 5 1/8" LONG	6063-T6 ALUMINUM	OLDCASTLE GLASS VISTAWALL	USED @ JAMBS
14.	CW-2023	MULLION	2.50 X 6.987 X .094	6063-T6 ALUMINUM	OLDCASTLE GLASS VISTAWALL	
15.	CW-1996	MULLION FILLER	.804 X 4.734 X .070	6063-T6 ALUMINUM	OLDCASTLE GLASS VISTAWALL	
16.	CW-2024	HEAD/SILL	2.39 X 6.862 X .094	6063-T6 ALUMINUM	OLDCASTLE GLASS VISTAWALL	
17.	CW-1998	HEAD/SILL TRIM	2.50 X 5.219 X .078	6063-T6 ALUMINUM	OLDCASTLE GLASS VISTAWALL	
18.	CW-2182	HEAVY MULLION	2.50 X 6.987 X .094	6063-T6 ALUMINUM	OLDCASTLE GLASS VISTAWALL	
19.	CW-2156	HORIZONTAL	2.39 X 6.847 X .094	6063-T6 ALUMINUM	OLDCASTLE GLASS VISTAWALL	
20.	CW-2026	TWO PIECE JAMB FEMALE HALF	2.40 X 6.975 X .094	6063-T6 ALUMINUM	OLDCASTLE GLASS VISTAWALL	
21.	CW-2002	TWO PIECE JAMB MALE HALF	1.203 X 5.25 X .094	6063-T6 ALUMINUM	OLDCASTLE GLASS VISTAWALL	
22.	CW-2183	CORNER PRESSURE PLATE	1.884 X 5.401 X .125	6063-T6 ALUMINUM	OLDCASTLE GLASS VISTAWALL	
23.	CW-2188	CORNER FACE CAP	.546 X 4.062 X .062	6063-T5 ALUMINUM	OLDCASTLE GLASS VISTAWALL	
24.	CW-2164	POCKET FILLER	.937 X 1.837 X .078	6063-T5 ALUMINUM	OLDCASTLE GLASS VISTAWALL	
25.	CW-2018	CORNER MULLION FEMALE HALF	1.724 X 7.094 X .140	6063-T6 ALUMINUM	OLDCASTLE GLASS VISTAWALL	
26.	CW-2019	CORNER MULLION MALE HALF	1.724 X 7.094 X .140	6063-T6 ALUMINUM	OLDCASTLE GLASS VISTAWALL	
27.	CW-2020	CORNER MULLION FILLER	1.302 X 2.50 X .078	6063-T5 ALUMINUM	OLDCASTLE GLASS VISTAWALL	
28.	D-226	DOOR JAMB	1.00 X 5.00 X .094	6063-T6 ALUMINUM	OLDCASTLE GLASS VISTAWALL	
28A.	D-231	SUB-FRAME HEADER	1.00 X 5.00 X .094	6063-T6 ALUMINUM	OLDCASTLE GLASS VISTAWALL	
29.	CW-709	3-1/2" FACE CAP	3.50 X .527 X .062	6063-T6 ALUMINUM	OLDCASTLE GLASS VISTAWALL	
30.	CW-2722	3-1/2" PRESSURE PLATE	3.40 X .450 X .094	6063-T6 ALUMINUM	OLDCASTLE GLASS VISTAWALL	
31.	CW-2720	EXPANSION HORIZONTAL TOP HALF	1.625 X 6.957 X .094	6063-T6 ALUMINUM	OLDCASTLE GLASS VISTAWALL	
32.	CW-2721	EXPANSION HORIZONTAL BOTTOM HALF	1.125 X 5.219 X .094	6063-T6 ALUMINUM	OLDCASTLE GLASS VISTAWALL	

NOTE #1: ALL VERTICALS PRESSURE PLATES CUT 1/4" SHORT IN LENGTH TO ALLOW FOR WEEP SLOT

FLORIDA BUILDING CODE (High Velocity Hurricane Zone)

DRAWN BY M.C.V.

05/06/09 DATE

09-070 DRAWING No

SHEET 4 OF 36

HR-251 CAPTURED CURTAIN WALL SYSTEM
SMALL MISSILE IMPACT INSULATED GLASS

Oldcastle Glass®
Engineered Products
803 AIRPORT RD. TERRELL TX 75160
PHONE: (972) 551-6100

REV. No	DESCRIPTION	DATE
1	GENERAL	10/12/09
2		
3		
4		

© 2009 TILTECO INC.

TILTECO INC.
TILLIT TESTING & ENGINEERING COMPANY
Phone : (305)871-1530 . Fax : (305)871-1531
5805 N.W. 36th. St., Ste. 305, VIRGINIA GARDENS, FLORIDA 33166
e-mail: tilteco@aol.com
EB-0006719
WALTER A. TILLIT Jr., P.E.
FLORIDA Lic. # 44167

WALTER A. TILLIT JR. LICENSE NO. 44167 STATE OF FLORIDA PROFESSIONAL ENGINEER

MIAMI-DADE STAMP

Approved as complying with the Florida Building Code
Date ~~March 24~~ 2010
NOA# ~~09-0421.04~~
Miami Dade Product Control
By

BILL OF MATERIALS (CONTINUED)

ITEM No.	PART NUMBER	DESCRIPTION	DIMENSIONS	MATERIAL	MANUFACTURER	NOTES
33.	HR-FP-4	MULLION END CAPS	3.5 X 2.00 X .062	RIGID VINYL	VARIES	SEE NOTE # 2 BELOW
34.	HR-FP-5	LEFT HAND JAMB END CAPS	2.96 X 0.78 X .062	RIGID VINYL	VARIES	SEE NOTE # 2 BELOW
35.	HR-FP-6	RIGHT HAND JAMB END CAPS	2.96 X 0.78 X .062	RIGID VINYL	VARIES	SEE NOTE # 2 BELOW
36.	HR-FP-8	90 DEG MULLION END CAP	4.615 X 3.195 X .062	RIGID VINYL	OLDCASTLE GLASS VISTAWALL	TOP & BOTTOM OF MULLION SEE NOTE # 2
37.	HR-FP-12	WATER DIVERTER	1.50 X 1.00 X .062	RIGID VINYL	VARIES	1.50 LONG SEE NOTE # 2
39.	HR-FP-14	TWO PART WALL JAMB SPLICE FEMALE HALF	5.00 X 1.484 X .125 X 6" LONG	6063-T6 ALUMINUM	VARIES	AT (2) PART JAMB CASE: (20) + (21)
40.	HR-FP-15	HEAD ANCHOR SLEEVE	2 3/16" X 4 15/16" X X 2 1/2" LONG	6063-T6 ALUMINUM	VARIES	
41.	HR-FP-17	HEAD ANCHOR SLEEVE CORNER	2 3/16" X 6 3/16" X 3" LONG	6063-T6 ALUMINUM	VARIES	USED @ JAMBS
42.	HR-FP-24	HEAD ANCHOR	3 1/2" x 6" x 4 1/4" LONG	6063-T6 ALUMINUM	VARIES	
43.	FASTENER	ANCHOR BOLT	5/8-11 X 4 1/2" SAE GRD 5 BOLT, HEX NUT AND WASHER	STEEL	VARIES	ZINC COATED, PER ASTM B-633
44.	**	STEEL DEADLOAD ANCHOR	4" X 6" X 5/16" X 5" LONG	A36 STEEL	VARIES	ZINC COATED, PER ASTM B-633.
45.	**	SLIP PAD	4" X 4" X .063	VINYL	KORALATH	USED @ MID POINT ANCHORS
46.	FASTENER	PERIMETER ANCHOR	3/8"-13 X 2" TYP F BOLT	STEEL	VARIES	ZINC COATED, PER ASTM B-633.
47.	**	STEEL DEADLOAD ANCHOR @ CORNER	4" X 8" X 1/4" X 5" LONG	A36 STEEL	VARIES	
48.	FASTENER	STEEL REINFORCING ATTACHMENT BOLT	1/4-20 X 2" BOLT WITH WASHER AND NUT	STEEL	VARIES	ZINC COATED, PER ASTM B-633
49.	SM-5601	JOINT SEALANT TAPE	.125 X .750 X VARIES	BUTYL	SCHNEE-MOREHEAD	
50.	FG5000-PP-8	REINFORCING STEEL	4 5/8" X 1 1/4" X 1/4" CHANNEL	A36 STEEL	VARIES	USED @ VERT. CORNER MULLION, COAT ZINC RICH PRIMER
51.	RS-16	STEEL REINFORCING INCLUDES RS-25	3/8" X 4" STEEL BAR RS-25 WELDED EVERY 18" WITH 2"X 3/32" WELDS	A36 STEEL	VARIES	USED @ VERT. MULLION COAT ZINC RICH PRIMER, 76" LONG
52.	RS-17	STEEL REINFORCING INCLUDES RS-25	3/4" X 4" STL. BAR WITH RS-25	A36 STEEL	VARIES	
53.	RS-25	REINFORCING STEEL	4 3/4" X 1 7/8" X 1/4" CHANNEL	A36 STEEL	VARIES	COAT ZINC RICH PRIMER
54.	FASTENER	STEEL REINFORCING ATTACHMENT BOLT	1/4-20 X 1 1/2" SAE GRADE 5 BOLT WITH WASHER AND NUT	STEEL	VARIES	THROUGH-BOLT @ INT HORIZONTALS
55.	HR-FP-18	TWO PART WALL JAMB SPLICE MALE HALF	.75 X 4.812 X .125	6063-T6 ALUMINUM	OLDCASTLE GLASS VISTAWALL	AT (2) PART JAMB CASE
59.	FASTENER	ATTACHMENT BOLT	1/4-20 X 2 1/4" BOLT WITH WASHER AND NUT	STEEL	VARIES	
60.	FASTENER	ATTACHMENT BOLT	1/4-20 X 3" SAE GRADE 5 BOLT WITH WASHER AND NUT	STEEL	VARIES	THROUGH-BOLT @ INT HORIZONTALS
63.	HR-FP-20	MULLION AND STANDARD JAMB SPLICE	2.16" X 4.96" X .125"X 6" LONG	6063-T6 ALUMINUM	OLDCASTLE GLASS VISTAWALL	
64.	HR-FP-21	CORNER MULLION SPLICE	2.147" X 6.314" X .125"	6063-T6 ALUMINUM	OLDCASTLE GLASS VISTAWALL	
65.	HR-FP-22	CORNER HEAD ANCHOR LEFT	2.147" X 6.314" X .25"	6063-T6 ALUMINUM	OLDCASTLE GLASS VISTAWALL	
66.	HR-FP-23	CORNER HEAD ANCHOR RIGHT	2.147" X 6.314" X .25"	6063-T6 ALUMINUM	OLDCASTLE GLASS VISTAWALL	

** NO PART NUMBER ASSIGNED
NOTE #2-BEAD OF DOW CORNING 995 SILICONE APPLIED TO FRAME SURFACE BEFORE PART IS INSTALLED

FLORIDA BUILDING CODE (High Velocity Hurricane Zone)

DRAWN BY M.C.V. | 05/06/09 DATE | 09-070 DRAWING No | SHEET 5 OF 36

HR-251 CAPTURED CURTAIN WALL SYSTEM
SMALL MISSILE IMPACT INSULATED GLASS

Oldcastle Glass®
Engineered Products
803 AIRPORT RD. TERRELL TX 75160
PHONE: (972) 551-6100

REV. No	DESCRIPTION	DATE	REV. No	DESCRIPTION	DATE
1			3		
2			4		

© 2009 TILTECO INC.

TILTECO INC.
WALTER A. TILLIT JR. & ENGINEERING COMPANY
N.W. 36th. St., Ste. 305, VIRGINIA GARDENS, FLORIDA 33166
Phone : (305)871-1530 . Fax : (305)871-1531
e-mail: tilteco@aol.com
EB-0006719
WALTER A. TILLIT Jr., P.E.
FLORIDA Lic. # 44167

WALTER A. TILLIT JR. LICENSE NO. 44167 STATE OF FLORIDA PROFESSIONAL ENGINEER

MIAMI-DADE STAMP

Approved as complying with the Miami-Dade County Building Code
Date MARCH 24, 2010
NOA 09-0721.04
Miami-Dade Product Control
By: Manuel Esa

ISOMETRIC ELEVATION FOR HR-251 IMPACT RESISTANT CAPTURED CURTAIN WALL SYSTEM

N.T.S.

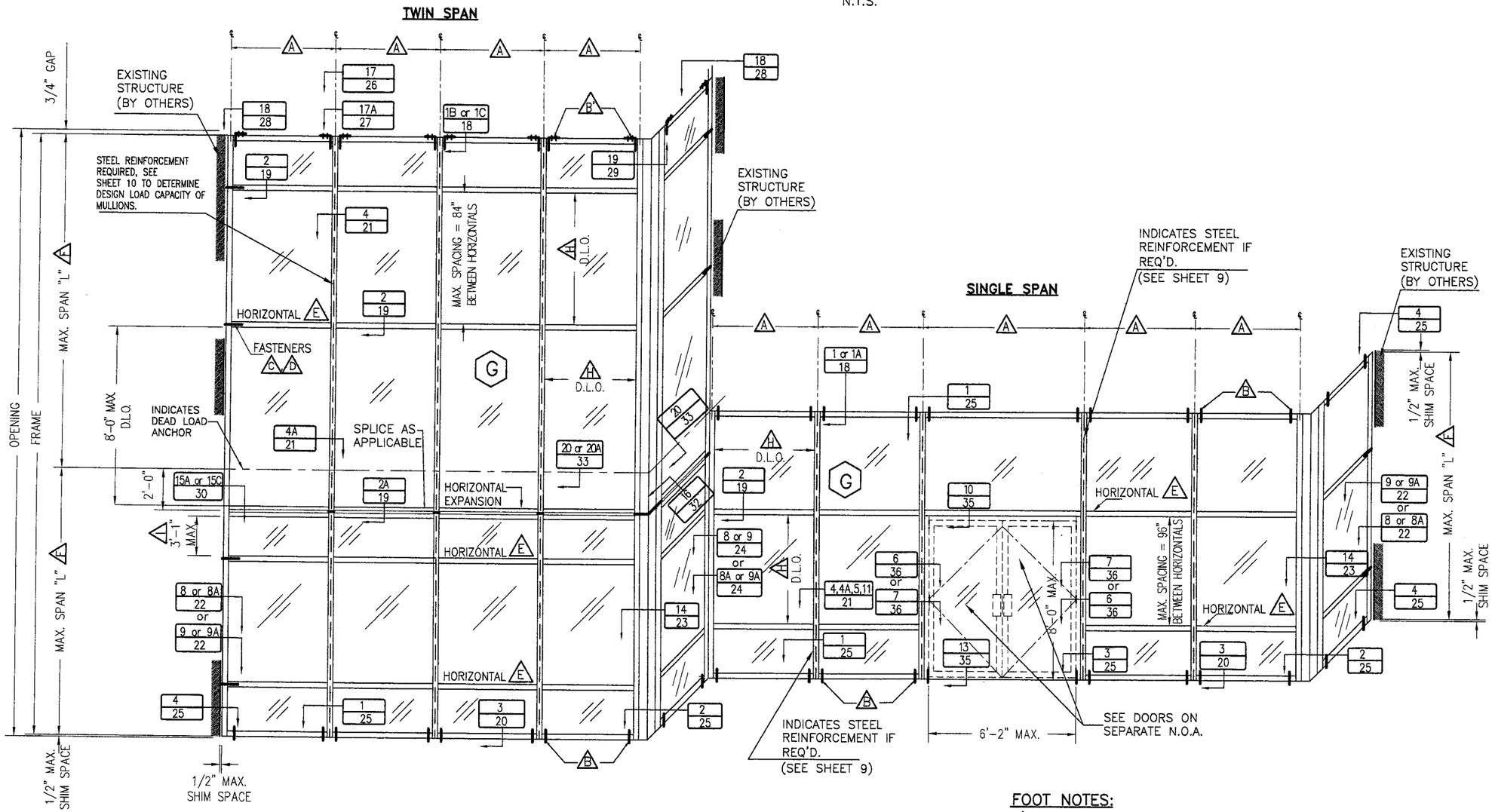

FOOT NOTES:

- (A) FOR MULLION SPACING SEE SHEETS 9 AND 10.
- (B) FOR HEAD (AT SINGLE SPAN CASE) AND SILL (AT SINGLE AND TWIN SPAN CASES), FASTENERS QUANTITY, TYPES AND SPECS SEE SHEET 12.
- (B') FOR HEAD (AT TWIN SPAN), FASTENERS QUANTITY, TYPES AND SPECS SEE SHEET 13.
- (C) FOR JAMB FASTENERS QUANTITY, TYPES AND SPECS SEE SHEETS 14 THRU 17.
- (D) SEE SHEETS 14 THRU 17 FOR MAXIMUM PRESSURE RATING FOR JAMBS CONNECTED TO EXISTING STRUCTURE.
- (E) USE OF HORIZONTALS (SEE SECTION 2/19 AND 2A/19) DESIGN LOADS FOR LIMITATIONS.
- (F) FOR MAXIMUM MULLION SPAN SEE SHEETS 9 AND 10.
- (G) FOR GLAZING DETAILS AND GLASS SCHEDULE SEE SHEET 7.
- (H) FOR MAXIMUM D.L.O. SEE SCHEDULE ON SHEET 8.
- (I) 3 1/2" EXPANSION HORIZONTAL SHALL ALWAYS BE ACCOMPANIED BY A 2 1/2"HORIZONTAL BELOW IT @ 37" MAXIMUM DISTANCE.

FLORIDA BUILDING CODE (High Velocity Hurricane Zone)

HR-251 CAPTURED CURTAIN WALL SYSTEM
SMALL MISSILE IMPACT INSULATED GLASS

DRAWN BY M.C.V. | 05/06/09 DATE | 09-070 DRAWING No | SHEET 6 OF 36

Oldcastle Glass®
Engineered Products
803 AIRPORT RD. TERRELL TX 75160
PHONE: (972) 551-6100

REV. No	DESCRIPTION	DATE
1	GENERAL	10/09/09
2		
3		
4		

© 2009 TILTECO INC.

TILTECO INC.
TILLIT TESTING & ENGINEERING COMPANY
6350 N.W. 36th. St. Ste. 305, VIRGINIA GARDENS, FLORIDA 33166
Phone : (305)871-1530 , Fax : (305)871-1531
e-mail: tilteco@aol.com
EB-0006719
WALTER A. TILLIT Jr., P.E.
FLORIDA Lic. # 44167

P.E. STAMP

WALTER A. TILLIT JR. LICENSE NO 44167 STATE OF FLORIDA PROFESSIONAL ENGINEER

MIAMI-DADE STAMP

Approved as complying with the Florida Building Code
Date MARCH 22, 2010
NOA# 09-0722.04
Miami-Dade Product Control
By Manuel Perez

TYPICAL GLAZING DETAILS

* USE 13/16" MIN. GLASS BITE AT CORNER MULLION LOCATIONS (SEE SHEETS 25 AND 32)

SCALE 1/8" = 1"

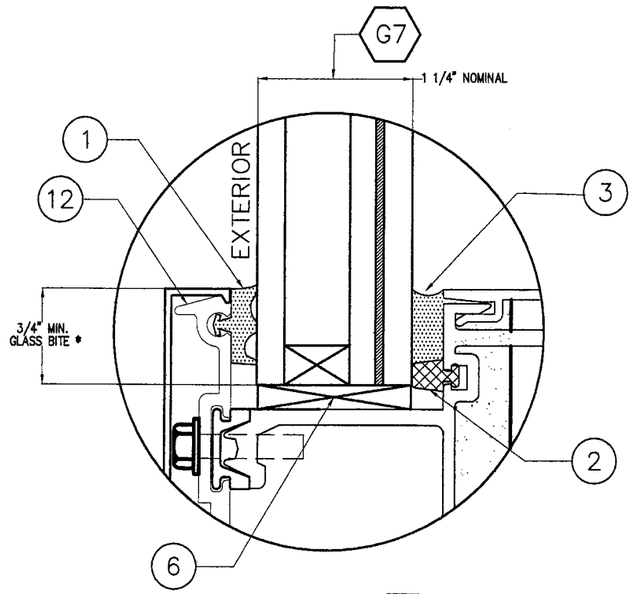

GLASS TYPE G7

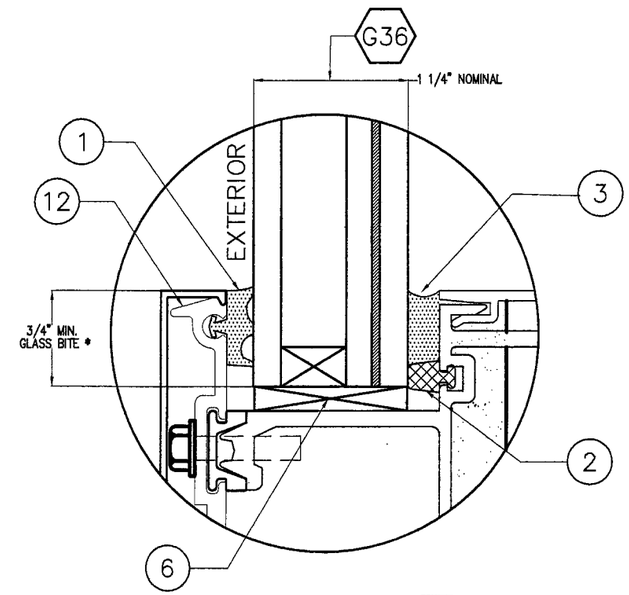

GLASS TYPE G36

GLASS SCHEDULE

GLASS LABEL	GLASS COMPOSITION	MANUFACTURER NAME	MAX. D.L.O.	MISSILE TYPE	NOA'S #
G7	1 1/4" INSULATED LAMINATED GLASS CONSISTING OF EXTERIOR 1/4" TEMP. – 1/2" AIR SPACE – 1/4" TEMP. – 060" DUPONT BUTACITE PVB INTERLAYER – 1/4" H.S.	DUPONT	SEE SCHEDULE ON SHEET 8	SMALL MISSILE IMPACT	09-0312.02
G36	1 1/4" INSULATED LAMINATED GLASS CONSISTING OF EXTERIOR 1/4" TEMP. – 1/2" AIR SPACE – 1/4" TEMP. –0.060" SOLUTIA SAFLEX PVB INTERLAYER – 1/4" H.S.	SOLUTIA	SEE SCHEDULE ON SHEET 8	SMALL MISSILE IMPACT	06-0216.06

FLORIDA BUILDING CODE (High Velocity Hurricane Zone)

DRAWN BY M.C.V./L.G.

05/06/09 DATE

09-070 DRAWING No

SHEET 7 OF 36

HR-251 CAPTURED CURTAIN WALL SYSTEM
SMALL MISSILE IMPACT INSULATED GLASS

Oldcastle Glass®
Engineered Products
803 AIRPORT RD. TERRELL TX 75160
PHONE: (972) 551-6100

REV. No	DESCRIPTION	DATE
1	GLASS 1/4" TEMPERED	10/8/09
2	GLASS NOA UPDATED	2/25/10

REV. No	DESCRIPTION	DATE
3		
4		

© 2009 TILTECO INC.

TILTECO INC.
TILLIT TESTING & ENGINEERING COMPANY
1833 N.W. 36th. St., Ste. 305, VIRGINIA GARDENS, FLORIDA 33166
Phone : (305)871-1530 . Fax : (305)871-1531
e-mail: titeco@aol.com
EB-0006719
WALTER A. TILLIT Jr., P.E.
FLORIDA Lic. # 44167

WALTER A. TILLIT JR. P.E. LICENSE NO. 44167 STATE OF FLORIDA PROFESSIONAL ENGINEER

MIAMI-DADE STAMP

Approved as complying with the Florida Building Code
Date MAR 17 2010
NOA 09-0312.02
Miami-Dade Product Control
Complies
By Manuel Perez

MAXIMUM DESIGN WIND LOAD "W" (psf) SCHEDULE FOR A GIVEN GLASS TYPE AND GLASS PANEL DIMENSIONS "b" (in) x "a" (in).

GLASS TYPE G7		
DIMENSION "b"	DIMENSION "a"	MAXIMUM DESING LOAD "W" psf
24"	from 24" to 96"	±90.0
30"	from 30" to 96"	±90.0
36"	from 36" to 96"	±90.0
42"	from 42" to 96"	±90.0
48"	from 48" to 96"	±90.0
54"	from 54" to 89"	±90.0
57.5"	from 57.5" to 84"	±90.0
60"	from 60" to 89"	±86.3
66"	from 66" to 73"	±78.4
69"	from 69" to 70"	±75.0

GLASS TYPE G36		
DIMENSION "b"	DIMENSION "a"	MAXIMUM DESING LOAD "W" psf
24"	from 24" to 96"	±90.0
30"	from 30" to 96"	±90.0
36"	from 36" to 96"	±90.0
42"	from 42" to 96"	±90.0
48"	from 48" to 96"	±90.0
54"	from 54" to 89"	±90.0
57.5"	from 57.5" to 84"	±90.0
60"	from 60" to 89"	±86.3
66"	from 66" to 73"	±78.4
69"	from 69" to 70"	±75.0

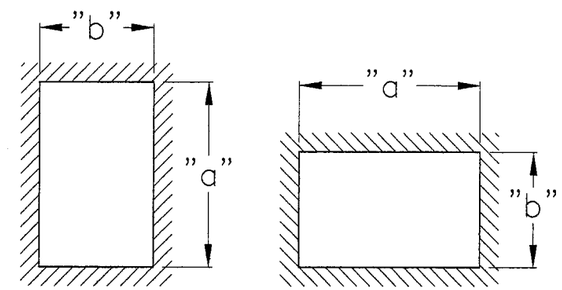

a ≥ b ALWAYS

GLASS PANEL DIMENSIONS LEGEND

DIMENSION "b" & "a" REFER TO D.L.O.

NOTES:
1. SEE SHEET 7 FOR GLAZING DETAILS AND GLASS SCHEDULE.

FLORIDA BUILDING CODE (High Velocity Hurricane Zone)

HR-251 CAPTURED CURTAIN WALL SYSTEM
SMALL MISSILE IMPACT INSULATED GLASS

Oldcastle Glass®
Engineered Products
803 AIRPORT RD. TERRELL TX 75160
PHONE: (972) 551-6100

REV. No	DESCRIPTION	DATE
1	SCHEDULE EXPANDED	11/05/09
2		
3		
4		

DRAWN BY R.E./M.C.V.
05/06/09 DATE
09-070 DRAWING No
SHEET 8 OF 36

© 2009 TILTECO INC.

TILTECO INC.
TILLIT TESTING & ENGINEERING COMPANY
N.W. 36th. St., Ste. 305, VIRGINIA GARDENS, FLORIDA 33166
Phone : (305)871-1530 · Fax : (305)871-1531
e-mail: tilteco@aol.com
EB-00067719
WALTER A. TILLIT Jr., P.E.
FLORIDA Lic. # 44167

WALTER A. TILLIT JR. P.E. LICENSE NO. 44167 STATE OF FLORIDA PROFESSIONAL ENGINEER

MIAMI-DADE STAMP

Approved as complying with the Florida Building Code
NOA# 09-0724.04
Product Control

HR-251 SINGLE SPAN MULLION

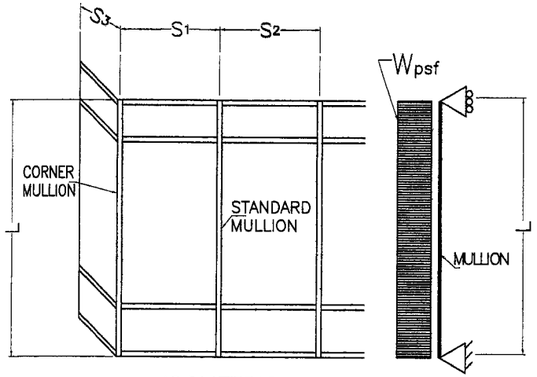

ISOMETRIC

SIDE VIEW

L = MULLION SPAN

EFFECTIVE SPACING $b = \frac{S_1 + S_2}{2}$
(FOR STANDARD MULLION)

EFFECTIVE SPACING $b = \frac{S_1 + S_3}{2}$
(FOR CORNER MULLION)

A — CASE:1 LIGHT MULLION (14) + (15) — Ix= 10.513 in4, Sx= 2.7174 in3 — IN TERMS OF ALUM.

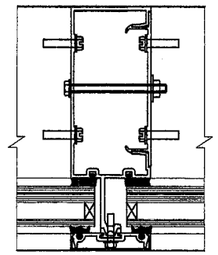

B — CASE:2 LIGHT MULLION (14) + (15) W/ STEEL CHANNEL (53) — Ix= 28.526 in4, Sx= 6.6447 in3 — IN TERMS OF ALUM.

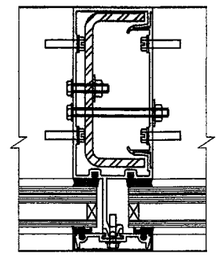

C — CASE:3 LIGHT MULLION (14) + (15) W/ STEEL CHANNEL (53) & 3/8"x4" STEEL BAR (51) — Ix= 34.571 in4, Sx= 7.9639 in3 — IN TERMS OF ALUM.

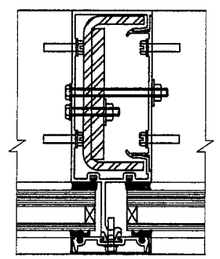

E — CASE:4 HEAVY MULLION (15) + (18) — Ix= 14.664 in4, Sx= 3.6363 in3 — IN TERMS OF ALUM.

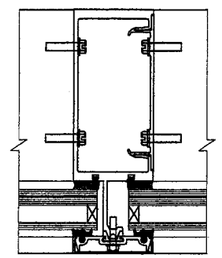

F — CASE:5 LIGHT MULLION (14) + (15) W/ STEEL CHANNEL (53) & 3/4"x4" STEEL BAR (52) — Ix= 40.604 in4, Sx= 9.2970 in3 — IN TERMS OF ALUM.

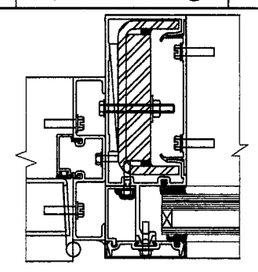

G — CASE:6 CORNER MULLION (25) + (26) W/ STEEL CHANNEL (50) — Ix= 31.499 in4, Sx= 7.4308 in3 — IN TERMS OF ALUM.

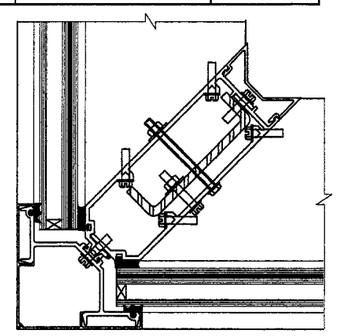

CASE DEFINITIONS

CASE 1 : SINGLE SPAN UNREINFORCED STANDARD MULLION A (SEE DET. 5/21)

CASE 2 : SINGLE SPAN REINFORCED STANDARD MULLION B FULL HEIGHT. (SEE DET. 4/21)

CASE 3 : SINGLE SPAN HEAVILY REINFORCED STANDARD MULLION C FULL HEIGHT. (SEE DET. 4A/21)

CASE 4 : SINGLE SPAN UNREINFORCED STANDARD HEAVY MULLION E (SEE DET. 11/21)

CASE 5 : SINGLE SPAN REINFORCED DOOR MULLION F FULL HEIGHT. (SEE DET. 7/36)

CASE 6 : SINGLE SPAN REINFORCED CORNER MULLION G FULL HEIGHT. (SEE DET. 14/23)

* MAXIMUM DESIGN PRESSURE RATING FOR STANDARD & CORNER MULLION WILL AUTOMATICALLY QUALIFY DESIGN PRESSURE RATINGS FOR JAMBS FOR ANY GIVEN MULLION SPACING.
MAXIMUM JAMB SPAN (DISTANCE BETWEEN ANCHORAGE POINTS) IS 96", AND JAMB ANCHORAGE SHALL BE PERFORMED AT HORIZONTAL RAIL LOCATIONS (EXCEPT AT EXPANSION HORIZONTAL RAILS).

MAXIMUM DESIGN PRESSURE RATING FOR STANDARD & CORNER MULLIONS *

MAXIMUM MULLION SPAN "L"(FT) SCHEDULE FOR A GIVEN DESIGN WIND LOAD "W" (psf) AND A GIVEN MULLION EFFECTIVE SPACING "b"

MAXIMUM DESIGN LOAD "W±" (psf)	EFFECTIVE SPACING "b" (Ft-in)	SINGLE SPAN MULLIONS CASE 1 MULLION: A "L" (Ft-in)	CASE 2 MULLION: B "L" (Ft-in)	CASE 3 MULLION: C "L" (Ft-in)	CASE 4 MULLION: E "L" (Ft-in)	CASE 5 MULLION: F "L" (Ft-in)	CASE 6 MULLION: G "L" (Ft-in)
60.0	3 '- 6 "	10 '- 0 "	12 '- 6 "	12 '- 6 "	10 '- 0 "	12 '- 6 "	12 '- 6 "
	4 '- 0 "	10 '- 0 "	12 '- 6 "	12 '- 6 "	10 '- 0 "	12 '- 6 "	12 '- 6 "
	4 '- 6 "	9 '- 8 "	12 '- 6 "	12 '- 6 "	10 '- 0 "	12 '- 6 "	12 '- 6 "
	5 '- 0 "	8 '- 8 "	12 '- 6 "	12 '- 6 "	10 '- 0 "	12 '- 6 "	12 '- 6 "
	5 '- 6 "	7 '- 11 "	12 '- 6 "	12 '- 6 "	10 '- 0 "	12 '- 6 "	12 '- 6 "
	6 '- 0 "	7 '- 3 "	12 '- 6 "	12 '- 6 "	9 '- 11 "	12 '- 6 "	12 '- 6 "
65.0	3 '- 6 "	10 '- 0 "	12 '- 6 "	12 '- 6 "	10 '- 0 "	12 '- 6 "	12 '- 6 "
	4 '- 0 "	10 '- 0 "	12 '- 6 "	12 '- 6 "	10 '- 0 "	12 '- 6 "	12 '- 6 "
	4 '- 6 "	8 '- 11 "	12 '- 6 "	12 '- 6 "	10 '- 0 "	12 '- 6 "	12 '- 6 "
	5 '- 0 "	8 '- 0 "	12 '- 6 "	12 '- 6 "	10 '- 0 "	12 '- 6 "	12 '- 6 "
	5 '- 6 "	7 '- 3 "	12 '- 6 "	12 '- 6 "	10 '- 0 "	12 '- 6 "	12 '- 6 "
	6 '- 0 "	6 '- 8 "	11 '- 8 "	12 '- 6 "	9 '- 2 "	12 '- 6 "	12 '- 6 "
70.0	3 '- 6 "	-	12 '- 6 "	12 '- 6 "	10 '- 0 "	12 '- 6 "	12 '- 6 "
	4 '- 0 "	-	12 '- 6 "	12 '- 6 "	10 '- 0 "	12 '- 6 "	12 '- 6 "
	4 '- 6 "	-	12 '- 6 "	12 '- 6 "	10 '- 0 "	12 '- 6 "	12 '- 6 "
	5 '- 0 "	-	12 '- 6 "	12 '- 6 "	10 '- 0 "	12 '- 6 "	12 '- 6 "
	5 '- 6 "	-	11 '- 10 "	12 '- 6 "	9 '- 3 "	12 '- 6 "	12 '- 6 "
	6 '- 0 "	-	10 '- 10 "	12 '- 6 "	8 '- 6 "	12 '- 6 "	12 '- 6 "
75.0	3 '- 6 "	-	12 '- 6 "	12 '- 6 "	10 '- 0 "	12 '- 6 "	12 '- 6 "
	4 '- 0 "	-	12 '- 6 "	12 '- 6 "	10 '- 0 "	12 '- 6 "	12 '- 6 "
	4 '- 6 "	-	12 '- 6 "	12 '- 6 "	10 '- 0 "	12 '- 6 "	12 '- 6 "
	5 '- 0 "	-	12 '- 2 "	12 '- 6 "	9 '- 6 "	12 '- 6 "	12 '- 6 "
	5 '- 6 "	-	11 '- 1 "	12 '- 6 "	8 '- 8 "	12 '- 6 "	12 '- 6 "
	6 '- 0 "	-	10 '- 2 "	12 '- 3 "	7 '- 11 "	12 '- 6 "	12 '- 6 "
76.0	3 '- 6 "	-	12 '- 6 "	12 '- 6 "	10 '- 0 "	12 '- 6 "	12 '- 6 "
	4 '- 0 "	-	12 '- 6 "	12 '- 6 "	10 '- 0 "	12 '- 6 "	12 '- 6 "
	4 '- 6 "	-	12 '- 6 "	12 '- 6 "	10 '- 0 "	12 '- 6 "	12 '- 6 "
	5 '- 0 "	-	12 '- 0 "	12 '- 6 "	9 '- 5 "	12 '- 6 "	12 '- 6 "
	5 '- 6 "	-	10 '- 11 "	12 '- 6 "	8 '- 6 "	12 '- 6 "	12 '- 6 "
	6 '- 0 "	-	10 '- 0 "	12 '- 1 "	7 '- 10 "	12 '- 6 "	12 '- 4 "
80.0	3 '- 6 "	-	12 '- 6 "	12 '- 6 "	-	12 '- 6 "	12 '- 6 "
	4 '- 0 "	-	12 '- 6 "	12 '- 6 "	-	12 '- 6 "	12 '- 6 "
	4 '- 6 "	-	12 '- 6 "	12 '- 6 "	-	12 '- 6 "	12 '- 6 "
	5 '- 0 "	-	11 '- 5 "	12 '- 6 "	-	12 '- 6 "	12 '- 6 "
	5 '- 6 "	-	10 '- 4 "	12 '- 6 "	-	12 '- 6 "	12 '- 6 "
	6 '- 0 "	-	9 '- 6 "	11 '- 6 "	-	12 '- 6 "	11 '- 9 "
85.0	3 '- 6 "	-	12 '- 6 "	12 '- 6 "	-	12 '- 6 "	12 '- 6 "
	4 '- 0 "	-	12 '- 6 "	12 '- 6 "	-	12 '- 6 "	12 '- 6 "
	4 '- 6 "	-	11 '- 11 "	12 '- 6 "	-	12 '- 6 "	12 '- 6 "
	5 '- 0 "	-	10 '- 9 "	12 '- 6 "	-	12 '- 6 "	12 '- 6 "
	5 '- 6 "	-	9 '- 9 "	11 '- 9 "	-	12 '- 6 "	12 '- 0 "
	6 '- 0 "	-	8 '- 11 "	10 '- 9 "	-	12 '- 4 "	11 '- 0 "
90.0	3 '- 6 "	-	12 '- 6 "	12 '- 6 "	-	12 '- 6 "	12 '- 6 "
	4 '- 0 "	-	12 '- 6 "	12 '- 6 "	-	12 '- 6 "	12 '- 6 "
	4 '- 6 "	-	11 '- 3 "	12 '- 6 "	-	12 '- 6 "	12 '- 6 "
	5 '- 0 "	-	10 '- 2 "	12 '- 3 "	-	12 '- 6 "	12 '- 6 "
	5 '- 6 "	-	9 '- 3 "	11 '- 1 "	-	12 '- 6 "	11 '- 4 "
	6 '- 0 "	-	8 '- 5 "	10 '- 2 "	-	11 '- 8 "	10 '- 5 "

FLORIDA BUILDING CODE (High Velocity Hurricane Zone)

HR-251 CAPTURED CURTAIN WALL SYSTEM
SMALL MISSILE IMPACT INSULATED GLASS

DRAWN BY L.G. | 05/06/09 DATE | 09-070 DRAWING No | SHEET 9 OF 36

Oldcastle Glass®
Engineered Products
803 AIRPORT RD. TERRELL TX 75160
PHONE: (972) 551-6100

REV. No	DESCRIPTION	DATE
1	GENERAL	10/09/09
2	Ix & Sx ADDED	10/28/09

REV. No	DESCRIPTION	DATE
3		
4		

© 2009 TILTECO INC.

TILTECO INC.
TILLIT TESTING & ENGINEERING COMPANY
5555 N.W. 36th. St., Ste. 305, VIRGINIA GARDENS, FLORIDA 33166
Phone : (305)871-1530 , Fax : (305)871-1531
e-mail: tilteco@aol.com
EB-0006719
WALTER A. TILLIT Jr., P.E.
FLORIDA Lic. # 44167

WALTER A. TILLIT JR. LICENSE No. 44167 STATE OF FLORIDA PROFESSIONAL ENGINEER

MIAMI-DADE STAMP

Approved as complying with the Florida Building Code
Date MARCH 24, 2010
NOA# 09-0721.04
Miami-Dade Product Control
By: Manuel Perez

HR-251 TWIN SPAN MULLION

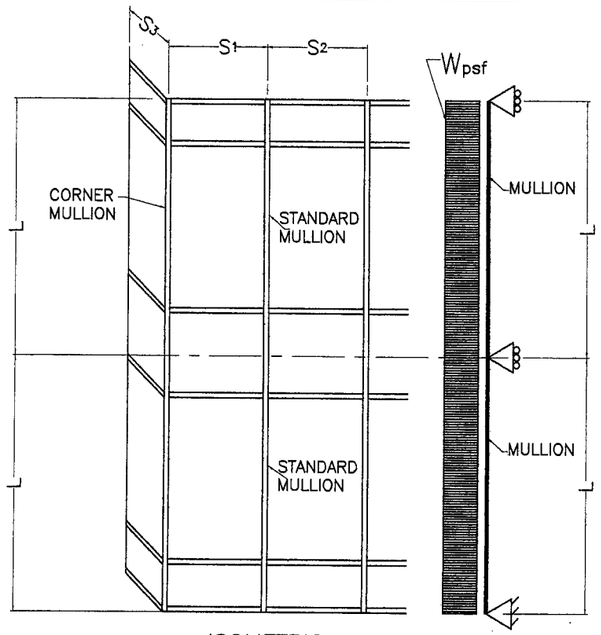

ISOMETRIC SIDE VIEW

L = MULLION SPAN

EFFECTIVE SPACING $b = \frac{S_1 + S_2}{2}$
(FOR STANDARD MULLION)

EFFECTIVE SPACING $b = \frac{S_1 + S_3}{2}$
(FOR CORNER MULLION)

CASE DEFINITIONS

CASE 7 : TWIN SPAN REINFORCED STANDARD MULLION B FULL HEIGHT. (SEE DET. 4/21) W/ REQUIRED 76" LONG ADDITIONAL REINFORCEMENT B' AT DEAD LOAD ANCHOR LOCATION SEE SHEET 11.

CASE 8 : TWIN SPAN REINFORCED CORNER MULLION G FULL HEIGHT. (SEE DET. 14/23)

* MAXIMUM DESIGN PRESSURE RATING FOR STANDARD & CORNER MULLION WILL AUTOMATICALLY QUALIFY DESIGN PRESSURE RATINGS FOR JAMBS FOR ANY GIVEN MULLION SPACING.
MAXIMUM JAMB SPAN (DISTANCE BETWEEN ANCHORAGE POINTS) IS 84", AND JAMB ANCHORAGE SHALL BE PERFORMED AT HORIZONTAL LOCATIONS (EXCEPT AT EXPANSION HORIZONTALS).

B	CASE:7 LIGHT MULLION (14) + (15) W/ STEEL CHANNEL (53)	Ix= 34.942 in4 Sx= 7.748 in3 IN TERMS OF ALUM.

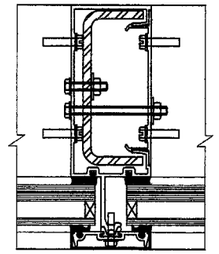

REINFORCEMENT B'	CASE:7' (AT DEAD LOAD ANCHOR LOCATION) B WITH 3/8"x4" STEEL BAR (51)	Ix= 41.220 in4 Sx= 8.922 in3 IN TERMS OF ALUM.

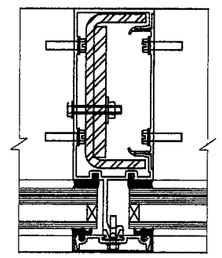

G	CASE:8 CORNER MULLION (25) + (26) W/ STEEL CHANNEL (50)	Ix= 31.499 in4 Sx= 7.4308 in3 IN TERMS OF ALUM.

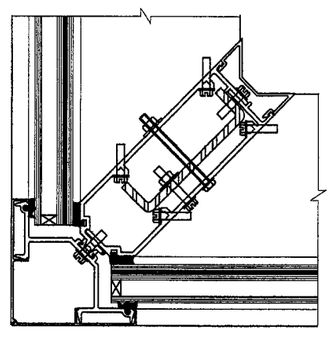

F	CASE:9 ◊ LIGHT MULLION (14) + (15) W/ STEEL CHANNEL (53) & 3/4"x4" STEEL BAR (52)	Ix= 40.604 in4 Sx= 9.2970 in3 IN TERMS OF ALUM.

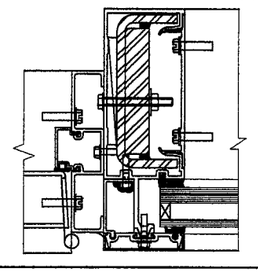

◊ THIS MULLION SHALL BE USED FULL HEIGHT, i.e. ON BOTH SPANS OF THE TWIN SPAN CONDITION.

MAXIMUM DESIGN PRESSURE RATING FOR STANDARD & CORNER MULLIONS *

MAXIMUM MULLION SPAN "L"(FT) SCHEDULE FOR A GIVEN DESIGN WIND LOAD "W" (psf) AND A GIVEN MULLION EFFECTIVE SPACING "b"

MAXIMUM DESIGN LOAD "W ± " (psf)	EFFECTIVE SPACING "b" (Ft-in)	TWIN SPAN MULLIONS CASE 7 MULLION: B "L" (Ft-in)	CASE 8 MULLION: G "L" (Ft-in)	CASE 9 ◊ MULLION: F "L" (Ft-in)
60.0	3 '- 6 "	12 '- 6 "	12 '- 6 "	12 '- 6 "
	4 '- 0 "	12 '- 6 "	12 '- 6 "	12 '- 6 "
	4 '- 6 "	12 '- 6 "	12 '- 6 "	12 '- 6 "
	5 '- 0 "	12 '- 6 "	12 '- 6 "	12 '- 6 "
	5 '- 6 "	12 '- 6 "	12 '- 6 "	12 '- 6 "
65.0	3 '- 6 "	12 '- 6 "	12 '- 6 "	12 '- 6 "
	4 '- 0 "	12 '- 6 "	12 '- 6 "	12 '- 6 "
	4 '- 6 "	12 '- 6 "	12 '- 6 "	12 '- 6 "
	5 '- 0 "	12 '- 6 "	12 '- 6 "	12 '- 6 "
	5 '- 6 "	12 '- 6 "	12 '- 6 "	12 '- 6 "
70.0	3 '- 6 "	12 '- 6 "	12 '- 6 "	12 '- 6 "
	4 '- 0 "	12 '- 6 "	12 '- 6 "	12 '- 6 "
	4 '- 6 "	12 '- 6 "	12 '- 6 "	12 '- 6 "
	5 '- 0 "	12 '- 6 "	12 '- 6 "	12 '- 6 "
	5 '- 6 "	12 '- 6 "	12 '- 6 "	12 '- 6 "
75.0	3 '- 6 "	12 '- 6 "	12 '- 6 "	12 '- 6 "
	4 '- 0 "	12 '- 6 "	12 '- 6 "	12 '- 6 "
	4 '- 6 "	12 '- 6 "	12 '- 6 "	12 '- 6 "
	5 '- 0 "	12 '- 6 "	12 '- 6 "	12 '- 6 "
	5 '- 6 "	12 '- 6 "	12 '- 6 "	12 '- 6 "
	6 '- 0 "	12 '- 6 "	12 '- 6 "	12 '- 6 "
76.0	3 '- 6 "	12 '- 6 "	12 '- 6 "	12 '- 6 "
	4 '- 0 "	12 '- 6 "	12 '- 6 "	12 '- 6 "
	4 '- 6 "	12 '- 6 "	12 '- 6 "	12 '- 6 "
	5 '- 0 "	12 '- 6 "	12 '- 6 "	12 '- 6 "
	5 '- 6 "	12 '- 6 "	12 '- 6 "	12 '- 6 "
80.0	3 '- 6 "	12 '- 6 "	12 '- 6 "	12 '- 6 "
	4 '- 0 "	12 '- 6 "	12 '- 6 "	12 '- 6 "
	4 '- 6 "	12 '- 6 "	12 '- 6 "	12 '- 6 "
	5 '- 0 "	12 '- 6 "	12 '- 6 "	12 '- 6 "
	5 '- 6 "	12 '- 6 "	12 '- 6 "	12 '- 6 "
85.0	3 '- 6 "	12 '- 6 "	12 '- 6 "	12 '- 6 "
	4 '- 0 "	12 '- 6 "	12 '- 6 "	12 '- 6 "
	4 '- 6 "	12 '- 6 "	12 '- 6 "	12 '- 6 "
	5 '- 0 "	12 '- 6 "	12 '- 6 "	12 '- 6 "
	5 '- 6 "	12 '- 0 "	12 '- 3 "	12 '- 6 "
90.0	3 '- 6 "	12 '- 6 "	12 '- 6 "	12 '- 6 "
	4 '- 0 "	12 '- 6 "	12 '- 6 "	12 '- 6 "
	4 '- 6 "	12 '- 6 "	12 '- 6 "	12 '- 6 "
	5 '- 0 "	12 '- 6 "	12 '- 6 "	12 '- 6 "
	5 '- 6 "	11 '- 4 "	11 '- 11 "	12 '- 6 "

FLORIDA BUILDING CODE (High Velocity Hurricane Zone)

HR-251 CAPTURED CURTAIN WALL SYSTEM
SMALL MISSILE IMPACT INSULATED GLASS

Oldcastle Glass®
Engineered Products
803 AIRPORT RD. TERRELL TX 75160
PHONE: (972) 551-6100

REV. No	DESCRIPTION	DATE
1	GENERAL	10/09/09
2	Ix & Sx ADDED	10/28/09
3		
4		

DRAWN BY L.G. | 05/06/09 DATE | 09-070 DRAWING No | SHEET 10 OF 36

© 2009 TILTECO INC.

TILTECO INC.
TILLIT TESTING & ENGINEERING COMPANY
6355 W. 36th. St., Ste. 305, VIRGINIA GARDENS, FLORIDA 33166
Phone : (305)871-1530 . Fax : (305)871-1531
e-mail: tilteco@aol.com
EB-0006719
WALTER A. TILLIT Jr., P.E.
FLORIDA Lic. # 44167

WALTER A. TILLIT JR. LICENSE No. 44167 STATE OF FLORIDA PROFESSIONAL ENGINEER

MIAMI-DADE STAMP

Approved as complying with the Florida Building Code
Date MARCH 24, 2010
NOA No. 09-0721.04
Miami-Dade Product Control
By Manuel Perez

OPTIONS FOR TWIN SPAN STANDARD AND CORNER MULLIONS INSTALLATION FOR HR-251 CURTAIN WALL SYSTEM

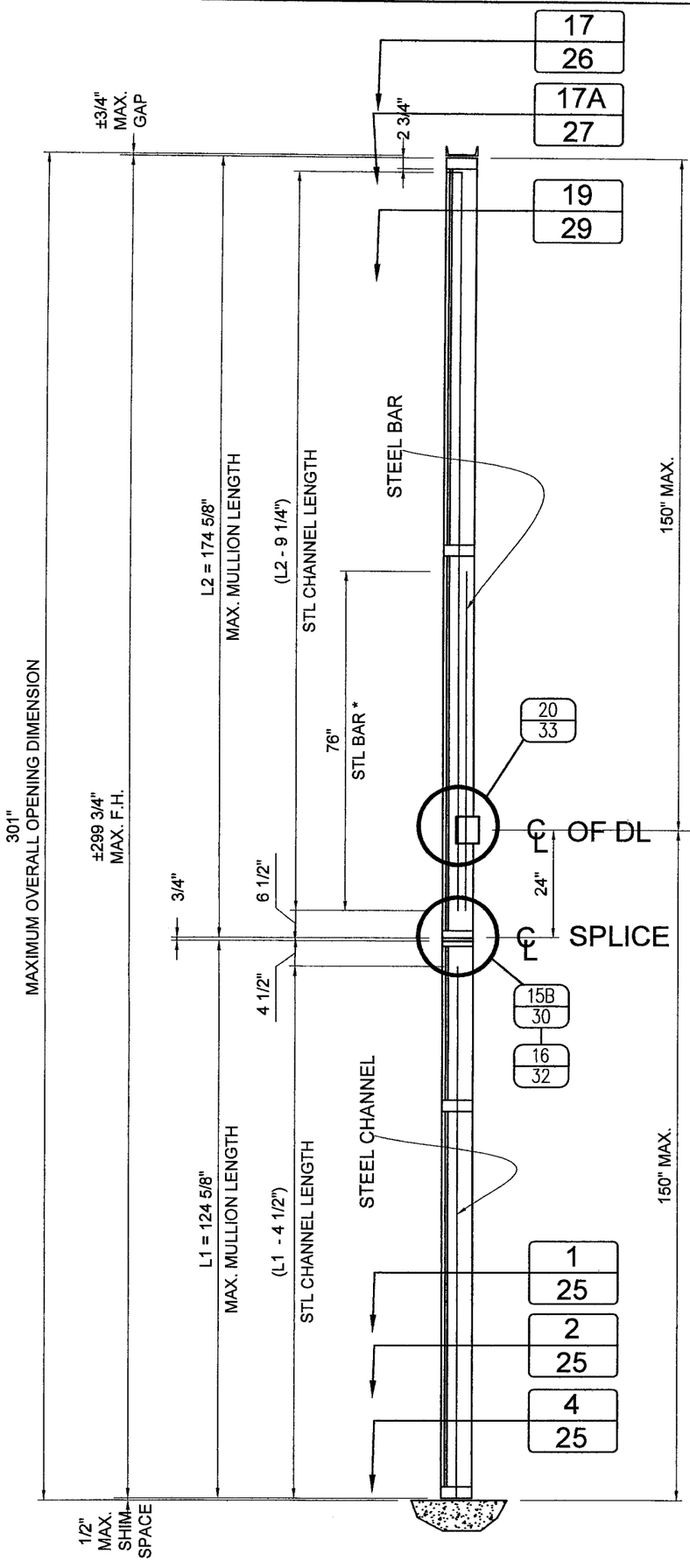

OPTION # 1
MULLION W/ SPLICE

* STEEL BAR NOT REQUIRED AT CORNER MULLION

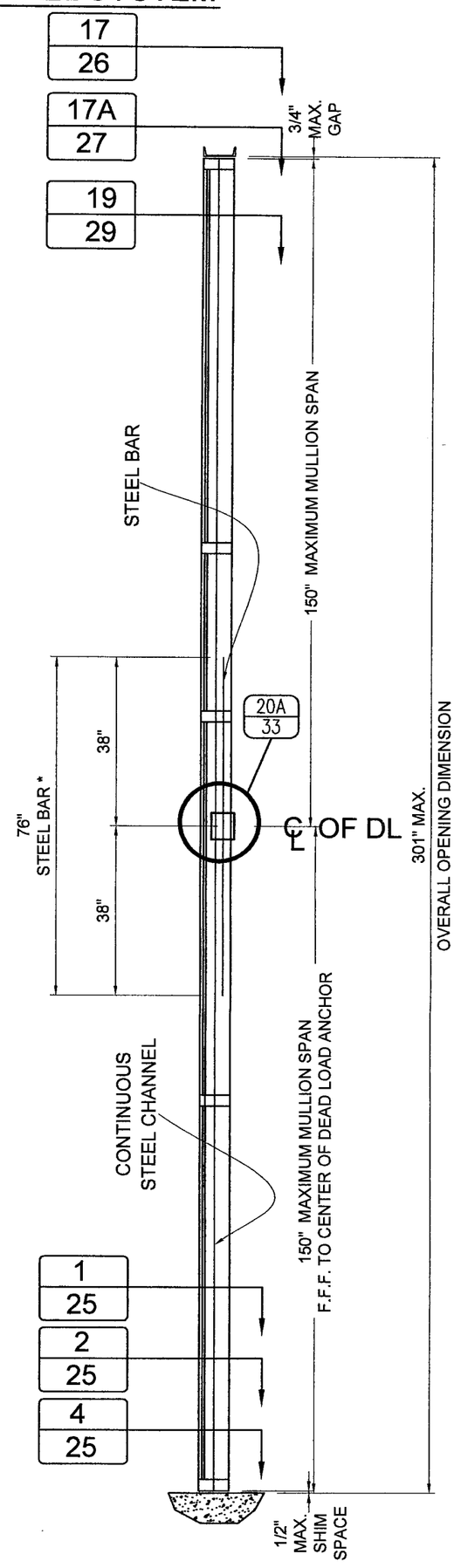

OPTION # 2:
CONTINUOUS MULLION W/O SPLICE

FLORIDA BUILDING CODE (High Velocity Hurricane Zone)

MIAMI-DADE STAMP	TILTECO STAMP	© 2009 TILTECO INC.	HR-251 CAPTURED CURTAIN WALL SYSTEM SMALL MISSILE IMPACT INSULATED GLASS	DRAWN BY F.P.
Approved as complying with the Florida Building Code Date MARCH 29, 2010 NOA# 09-0721.04 Miami Dade Product Control Division By Manuel Perez	WALTER A. TILLIT JR. LICENSE No. 44167 STATE OF FLORIDA PROFESSIONAL ENGINEER	TILTECO INC. TILLIT TESTING & ENGINEERING COMPANY 6300 N.W. 36th. St., Ste. 305, VIRGINIA GARDENS, FLORIDA 33166 Phone : (305)871-1530 . Fax : (305)871-1531 e-mail: tilteco@aol.com EB-0006719 WALTER A. TILLIT Jr., P.E. FLORIDA Lic. # 44167	Oldcastle Glass® Engineered Products 803 AIRPORT RD. TERRELL TX 75160 PHONE: (972) 551-6100	05/06/09 DATE 09-070 DRAWING No

REV. No	DESCRIPTION	DATE	REV. No	DESCRIPTION	DATE
1	GENERAL	10/9/09	3		
2			4		

SHEET 11 OF 36

MAXIMUM PRESSURE RATING FOR SINGLE SPAN (HEAD & SILL) & TWIN SPAN (SILL ONLY) MULLION CONNECTIONS *(SEE ALSO SHEET 13)

MAXIMUM MULLION SPAN	EFFECTIVE SPACING	MAXIMUM DESIGN LOAD W (psf)				
		POURED CONCRETE (Min. f'c = 3ksi) SUBSTRATE				1/4" Min. THK ASTM A-36 STEEL SUBSTRATE
		FASTENERS TYPES				FASTENERS
"L" (Ft-in)	"b" (Ft-in)	A	A'	B	C	D
8 '- 5 "	3 '- 6 "	90.0	90.0	90.0	90.0	90.0
	4 '- 0 "	90.0	90.0	90.0	90.0	90.0
	4 '- 6 "	90.0	90.0	90.0	90.0	90.0
	5 '- 0 "	90.0	90.0	90.0	90.0	90.0
	5 '- 6 "	90.0	90.0	90.0	90.0	90.0
	6 '- 0 "	90.0	90.0	90.0	90.0	90.0
8 '- 6 "	3 '- 6 "	90.0	90.0	90.0	90.0	90.0
	4 '- 0 "	90.0	90.0	90.0	90.0	90.0
	4 '- 6 "	90.0	90.0	90.0	90.0	90.0
	5 '- 0 "	90.0	90.0	90.0	90.0	90.0
	5 '- 6 "	90.0	90.0	90.0	90.0	90.0
	6 '- 0 "	90.0	90.0	90.0	90.0	90.0
9 '- 0 "	3 '- 6 "	90.0	90.0	90.0	90.0	90.0
	4 '- 0 "	90.0	90.0	90.0	90.0	90.0
	4 '- 6 "	90.0	90.0	90.0	90.0	90.0
	5 '- 0 "	90.0	90.0	90.0	90.0	90.0
	5 '- 6 "	90.0	90.0	90.0	90.0	90.0
	6 '- 0 "	90.0	90.0	90.0	90.0	90.0
9 '- 6 "	3 '- 6 "	90.0	90.0	90.0	90.0	90.0
	4 '- 0 "	90.0	90.0	90.0	90.0	90.0
	4 '- 6 "	90.0	90.0	90.0	90.0	90.0
	5 '- 0 "	90.0	90.0	90.0	90.0	90.0
	5 '- 6 "	90.0	90.0	90.0	90.0	90.0
	6 '- 0 "	90.0	90.0	90.0	90.0	90.0
10 '- 0 "	3 '- 6 "	90.0	90.0	90.0	90.0	90.0
	4 '- 0 "	90.0	90.0	90.0	90.0	90.0
	4 '- 6 "	90.0	90.0	90.0	90.0	90.0
	5 '- 0 "	90.0	90.0	90.0	90.0	90.0
	5 '- 6 "	90.0	90.0	90.0	90.0	90.0
	6 '- 0 "	90.0	90.0	90.0	90.0	90.0
10 '- 6 "	3 '- 6 "	90.0	90.0	90.0	90.0	90.0
	4 '- 0 "	90.0	90.0	90.0	90.0	90.0
	4 '- 6 "	90.0	90.0	90.0	90.0	90.0
	5 '- 0 "	90.0	90.0	90.0	90.0	90.0
	5 '- 6 "	90.0	90.0	90.0	90.0	90.0
	6 '- 0 "	90.0	90.0	90.0	87.8	90.0
11 '- 0 "	3 '- 6 "	90.0	90.0	90.0	90.0	90.0
	4 '- 0 "	90.0	90.0	90.0	90.0	90.0
	4 '- 6 "	90.0	90.0	90.0	90.0	90.0
	5 '- 0 "	90.0	90.0	90.0	90.0	90.0
	5 '- 6 "	90.0	90.0	90.0	90.0	90.0
	6 '- 0 "	90.0	90.0	90.0	83.8	90.0
11 '- 6 "	3 '- 6 "	90.0	90.0	90.0	90.0	90.0
	4 '- 0 "	90.0	90.0	90.0	90.0	90.0
	4 '- 6 "	90.0	90.0	90.0	90.0	90.0
	5 '- 0 "	90.0	90.0	90.0	90.0	90.0
	5 '- 6 "	90.0	90.0	90.0	87.5	90.0
	6 '- 0 "	90.0	90.0	90.0	80.2	90.0
12 '- 0 "	3 '- 6 "	90.0	90.0	90.0	90.0	90.0
	4 '- 0 "	90.0	90.0	90.0	90.0	90.0
	4 '- 6 "	90.0	90.0	90.0	90.0	90.0
	5 '- 0 "	90.0	90.0	90.0	90.0	90.0
	5 '- 6 "	90.0	90.0	90.0	83.8	90.0
	6 '- 0 "	88.6	88.6	88.6	76.8	90.0
12 '- 6 "	3 '- 6 "	90.0	90.0	90.0	90.0	90.0
	4 '- 0 "	90.0	90.0	90.0	90.0	90.0
	4 '- 6 "	90.0	90.0	90.0	90.0	90.0
	5 '- 0 "	90.0	90.0	90.0	88.5	90.0
	5 '- 6 "	90.0	90.0	90.0	80.5	90.0
	6 '- 0 "	85.0	85.0	85.0	73.8	87.7

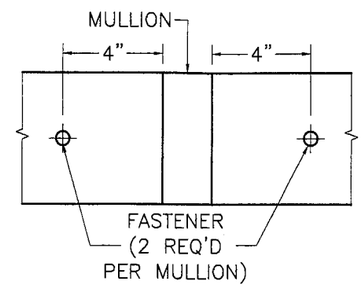

EXTERIOR

SCHEMATIC CONNECTION DETAIL *

* SEE CONNECTION DETAILS ON SHEETS 18 & 25 FOR FASTENERS QUANTITY & LOCATIONS AT MULLION.

FASTENERS TYPES

A - 1/2"Ø HILTI KWIK BOLT TZ ANCHOR W/ 3 1/4" Min. EMBEDMENT INTO 8" Min. THICK POURED CONCRETE (Min. f'c = 3 ksi) BEYOND ANY FINISH MATERIAL, W/ 6" MIN. EDGE DISTANCE.

A' - 1/2"Ø HILTI KWIK BOLT TZ ANCHOR W/ 3 1/4" Min. EMBEDMENT INTO 6" Min. THICK POURED CONCRETE (Min. f'c = 3 ksi) BEYOND ANY FINISH MATERIAL, W/ 7 1/2" MIN. EDGE DISTANCE.

B - 1/2"Ø HILTI KWIK BOLT 3 ANCHOR W/ 2 1/4" Min. EMBEDMENT INTO 6" Min. THICK POURED CONCRETE (Min. f'c = 3 ksi) BEYOND ANY FINISH MATERIAL, W/ 3 3/4" MIN. EDGE DISTANCE.

C - 1/2"Ø HILTI HUS-H SCREW ANCHOR W/ 3" Min. EMBEDMENT INTO 6" Min. THICK POURED CONCRETE (Min. f'c = 3 ksi) BEYOND ANY FINISH MATERIAL, W/ 5" MIN. EDGE DISTANCE.

D - 1/2"Ø-13 TYPE "F" GRADE 5 BOLT TO 1/2" MIN. THK. ASTM A-36 STEEL W/ 1" Min. EDGE DISTANCE OR 1/2"Ø -13 SAE GALVANIZED STEEL GRADE 5 HHB THRU BOLT W/ NUT & LOCK WASHER TO 1/4" Min. THK. ASTM A-36 STEEL W/ 1" MIN. EDGE DISTANCE.

FLORIDA BUILDING CODE (High Velocity Hurricane Zone)

HR-251 CAPTURED CURTAIN WALL SYSTEM
SMALL MISSILE IMPACT INSULATED GLASS

Oldcastle Glass®
Engineered Products
803 AIRPORT RD. TERRELL TX 75160
PHONE: (972) 551-6100

REV. No	DESCRIPTION	DATE
1	GENERAL	10/9/09
2		
3		
4		

REV. No	DESCRIPTION	DATE

DRAWN BY L.G.
05/06/09 DATE
09-070 DRAWING No
SHEET 12 OF 36

© 2009 TILTECO INC.

TILTECO INC.
TILLIT TESTING & ENGINEERING COMPANY
8550 S.W. 36th. St., Ste. 305, VIRGINIA GARDENS, FLORIDA 33166
Phone : (305)871-1530 . Fax : (305)871-1531
e-mail: tilteco@aol.com
EB-0006719
WALTER A. TILLIT Jr., P.E.
FLORIDA Lic. # 44167

P.E. STAMP
WALTER A. TILLIT JR. LICENSE No. 44167 STATE OF FLORIDA PROFESSIONAL ENGINEER

MIAMI-DADE STAMP
Approved as complying with the Dade Building Code
NOA# 09-0121.04
Miami-Dade Product Control
By: Manuel Perez

MAXIMUM PRESSURE RATING FOR TWIN SPAN MULLION HEAD ANCHOR CONNECTIONS

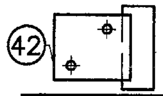

TWIN SPAN MULLION : HEAD CONNECTION *

W/ (1) 6"x 3 1/2" x 4 1/4" LONG ANCHOR #42

TYPE 1 **		MAXIMUM DESIGN LOAD W (psf)				
MAXIMUM MULLION SPAN	EFFECTIVE SPACING	POURED CONCRETE (Min. f'c = 3ksi) SUBSTRATE				1/4" Min. THK ASTM A-36 STEEL SUBSTRATE
		FASTENERS TYPES				FASTENERS
"L" (Ft-in)	"b" (Ft-in)	A	A'	B	C	D
8 '- 5 "	3 '- 6 "	66.3	69.2	70.5	85.4	90.0
	4 '- 0 "	58.0	60.5	61.7	74.7	90.0
	4 '- 6 "	51.6	53.8	54.8	66.4	90.0
	5 '- 0 "	46.4	48.4	49.3	59.8	90.0
	5 '- 6 "	42.2	44.0	44.9	54.3	90.0
	6 '- 0 "	38.7	40.4	41.1	49.8	90.0
8 '- 6 "	3 '- 6 "	65.6	68.5	69.8	84.5	90.0
	4 '- 0 "	57.4	59.9	61.1	74.0	90.0
	4 '- 6 "	51.1	53.3	54.3	65.8	90.0
	5 '- 0 "	46.0	48.0	48.9	59.2	90.0
	5 '- 6 "	41.8	43.6	44.4	53.8	90.0
	6 '- 0 "	38.3	40.0	40.7	49.3	90.0
9 '- 0 "	3 '- 6 "	62.0	64.7	65.9	79.8	90.0
	4 '- 0 "	54.3	56.6	57.7	69.9	90.0
	4 '- 6 "	48.2	50.3	51.3	62.1	90.0
	5 '- 0 "	43.4	45.3	46.1	55.9	90.0
	5 '- 6 "	39.5	41.2	42.0	50.8	90.0
	6 '- 0 "	36.2	37.7	38.5	46.6	90.0
9 '- 6 "	3 '- 6 "	58.7	61.3	62.5	75.6	90.0
	4 '- 0 "	51.4	53.6	54.6	66.2	90.0
	4 '- 6 "	45.7	47.7	48.6	58.8	90.0
	5 '- 0 "	41.1	42.9	43.7	52.9	90.0
	5 '- 6 "	37.4	39.0	39.7	48.1	90.0
	6 '- 0 "	34.3	35.8	36.4	44.1	90.0
10 '- 0 "	3 '- 6 "	55.8	58.2	59.3	71.9	90.0
	4 '- 0 "	48.8	50.9	51.9	62.9	90.0
	4 '- 6 "	43.4	45.3	46.1	55.9	90.0
	5 '- 0 "	39.1	40.8	41.5	50.3	90.0
	5 '- 6 "	35.5	37.1	37.8	45.7	90.0
	6 '- 0 "	32.6	34.0	34.6	41.9	90.0
10 '- 6 "	3 '- 6 "	53.1	55.5	56.5	68.4	90.0
	4 '- 0 "	46.5	48.5	49.4	59.9	90.0
	4 '- 6 "	41.3	43.1	43.9	53.2	90.0
	5 '- 0 "	37.2	38.8	39.6	47.9	90.0
	5 '- 6 "	33.8	35.3	36.0	43.6	90.0
	6 '- 0 "	31.0	32.3	33.0	39.9	90.0
11 '- 0 "	3 '- 6 "	50.7	52.9	53.9	65.3	90.0
	4 '- 0 "	44.4	46.3	47.2	57.2	90.0
	4 '- 6 "	39.5	41.2	42.0	50.8	90.0
	5 '- 0 "	35.5	37.1	37.8	45.7	90.0
	5 '- 6 "	32.3	33.7	34.3	41.6	90.0
	6 '- 0 "	29.6	30.9	31.5	38.1	87.7
11 '- 6 "	3 '- 6 "	48.5	50.6	51.6	62.5	90.0
	4 '- 0 "	42.5	44.3	45.1	54.7	90.0
	4 '- 6 "	37.7	39.4	40.1	48.6	90.0
	5 '- 0 "	34.0	35.4	36.1	43.7	90.0
	5 '- 6 "	30.9	32.2	32.8	39.8	90.0
	6 '- 0 "	28.3	29.5	30.1	36.5	83.9
12 '- 0 "	3 '- 6 "	46.5	48.5	49.4	59.9	90.0
	4 '- 0 "	40.7	42.5	43.3	52.4	90.0
	4 '- 6 "	36.2	37.7	38.5	46.6	90.0
	5 '- 0 "	32.6	34.0	34.6	41.9	90.0
	5 '- 6 "	29.6	30.9	31.5	38.1	87.7
	6 '- 0 "	27.1	28.3	28.8	34.9	80.4
12 '- 6 "	3 '- 6 "	44.6	46.6	47.5	57.5	90.0
	4 '- 0 "	39.1	40.8	41.5	50.3	90.0
	4 '- 6 "	34.7	36.2	36.9	44.7	90.0
	5 '- 0 "	31.2	32.6	33.2	40.2	90.0
	5 '- 6 "	28.4	29.6	30.2	36.6	84.2
	6 '- 0 "	26.0	27.2	27.7	33.5	77.2

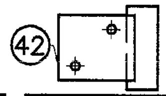

TWIN SPAN MULLION : HEAD CONNECTION *

W/ (1) 6"x 3 1/2" x 4 1/4" LONG ANCHOR #42

TYPE 2 **		MAXIMUM DESIGN LOAD W (psf)				
MAXIMUM MULLION SPAN	EFFECTIVE SPACING	POURED CONCRETE (Min. f'c = 3ksi) SUBSTRATE				1/4" Min. THK ASTM A-36 STEEL SUBSTRATE
		FASTENERS TYPES				FASTENERS
"L" (Ft-in)	"b" (Ft-in)	A	A'	B	C	D
8 '- 5 "	3 '- 6 "	59.2	61.8	62.9	76.2	90.0
	4 '- 0 "	51.8	54.0	55.1	66.7	90.0
	4 '- 6 "	46.0	48.0	49.0	59.3	90.0
	5 '- 0 "	41.4	43.2	44.1	53.4	90.0
	5 '- 6 "	37.7	39.3	40.1	48.5	90.0
	6 '- 0 "	34.5	36.0	36.7	44.5	90.0
8 '- 6 "	3 '- 6 "	58.6	61.2	62.3	75.5	90.0
	4 '- 0 "	51.3	53.5	54.5	66.0	90.0
	4 '- 6 "	45.6	47.6	48.5	58.7	90.0
	5 '- 0 "	41.0	42.8	43.6	52.8	90.0
	5 '- 6 "	37.3	38.9	39.7	48.0	90.0
	6 '- 0 "	34.2	35.7	36.4	44.0	90.0
9 '- 0 "	3 '- 6 "	55.4	57.8	58.9	71.3	90.0
	4 '- 0 "	48.4	50.5	51.5	62.4	90.0
	4 '- 6 "	43.1	44.9	45.8	55.4	90.0
	5 '- 0 "	38.8	40.4	41.2	49.9	90.0
	5 '- 6 "	35.2	36.8	37.5	45.4	90.0
	6 '- 0 "	32.3	33.7	34.3	41.6	90.0
9 '- 6 "	3 '- 6 "	52.4	54.7	55.8	67.5	90.0
	4 '- 0 "	45.9	47.9	48.8	59.1	90.0
	4 '- 6 "	40.8	42.6	43.4	52.5	90.0
	5 '- 0 "	36.7	38.3	39.0	47.3	90.0
	5 '- 6 "	33.4	34.8	35.5	43.0	90.0
	6 '- 0 "	30.6	31.9	32.5	39.4	90.0
10 '- 0 "	3 '- 6 "	49.8	52.0	53.0	64.2	90.0
	4 '- 0 "	43.6	45.5	46.4	56.1	90.0
	4 '- 6 "	38.8	40.4	41.2	49.9	90.0
	5 '- 0 "	34.9	36.4	37.1	44.9	90.0
	5 '- 6 "	31.7	33.1	33.7	40.8	90.0
	6 '- 0 "	29.1	30.3	30.9	37.4	86.1
10 '- 6 "	3 '- 6 "	47.4	49.5	50.5	61.1	90.0
	4 '- 0 "	41.5	43.3	44.1	53.5	90.0
	4 '- 6 "	36.9	38.5	39.2	47.5	90.0
	5 '- 0 "	33.2	34.7	35.3	42.8	90.0
	5 '- 6 "	30.2	31.5	32.1	38.9	89.5
	6 '- 0 "	27.7	28.9	29.4	35.6	82.0
11 '- 0 "	3 '- 6 "	45.3	47.3	48.2	58.3	90.0
	4 '- 0 "	39.6	41.4	42.1	51.0	90.0
	4 '- 6 "	35.2	36.8	37.5	45.4	90.0
	5 '- 0 "	31.7	33.1	33.7	40.8	90.0
	5 '- 6 "	28.8	30.1	30.6	37.1	85.4
	6 '- 0 "	26.4	27.6	28.1	34.0	78.3
11 '- 6 "	3 '- 6 "	43.3	45.2	46.1	55.8	90.0
	4 '- 0 "	37.9	39.6	40.3	48.8	90.0
	4 '- 6 "	33.7	35.2	35.8	43.4	90.0
	5 '- 0 "	30.3	31.6	32.2	39.1	89.9
	5 '- 6 "	27.6	28.8	29.3	35.5	81.7
	6 '- 0 "	25.3	26.4	26.9	32.5	74.9
12 '- 0 "	3 '- 6 "	41.5	43.3	44.1	53.5	90.0
	4 '- 0 "	36.3	37.9	38.6	46.8	90.0
	4 '- 6 "	32.3	33.7	34.3	41.6	90.0
	5 '- 0 "	29.1	30.3	30.9	37.4	86.1
	5 '- 6 "	26.4	27.6	28.1	34.0	78.3
	6 '- 0 "	24.2	25.3	25.8	31.2	71.8
12 '- 6 "	3 '- 6 "	39.9	41.6	42.4	51.3	90.0
	4 '- 0 "	34.9	36.4	37.1	44.9	90.0
	4 '- 6 "	31.0	32.3	33.0	39.9	90.0
	5 '- 0 "	27.9	29.1	29.7	35.9	82.7
	5 '- 6 "	25.4	26.5	27.0	32.7	75.2
	6 '- 0 "	23.3	24.3	24.7	29.9	68.9

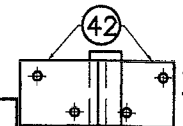

TWIN SPAN MULLION: HEAD CONNECTION *

W/ (2) 6"x3 1/2"x4 1/4" LONG ANCHOR #42

TYPE 1 & 2 **		MAXIMUM DESIGN LOAD W (psf)				
MAXIMUM MULLION SPAN	EFFECTIVE SPACING	POURED CONCRETE (Min. f'c = 3ksi) SUBSTRATE				1/4" Min. THK ASTM A-36 STEEL SUBSTRATE
		FASTENERS TYPES				FASTENERS
"L" (Ft-in)	"b" (Ft-in)	A	A'	B	C	D
8 '- 5 "	3 '- 6 "	90.0	90.0	90.0	90.0	90.0
	4 '- 0 "	90.0	90.0	90.0	90.0	90.0
	4 '- 6 "	90.0	90.0	90.0	90.0	90.0
	5 '- 0 "	90.0	90.0	90.0	90.0	90.0
	5 '- 6 "	90.0	90.0	90.0	90.0	90.0
	6 '- 0 "	90.0	90.0	90.0	90.0	90.0
8 '- 6 "	3 '- 6 "	90.0	90.0	90.0	90.0	90.0
	4 '- 0 "	90.0	90.0	90.0	90.0	90.0
	4 '- 6 "	90.0	90.0	90.0	90.0	90.0
	5 '- 0 "	90.0	90.0	90.0	90.0	90.0
	5 '- 6 "	90.0	90.0	90.0	90.0	90.0
	6 '- 0 "	90.0	90.0	90.0	90.0	90.0
9 '- 0 "	3 '- 6 "	90.0	90.0	90.0	90.0	90.0
	4 '- 0 "	90.0	90.0	90.0	90.0	90.0
	4 '- 6 "	90.0	90.0	90.0	90.0	90.0
	5 '- 0 "	90.0	90.0	90.0	90.0	90.0
	5 '- 6 "	90.0	90.0	90.0	90.0	90.0
	6 '- 0 "	90.0	90.0	90.0	90.0	90.0
9 '- 6 "	3 '- 6 "	90.0	90.0	90.0	90.0	90.0
	4 '- 0 "	90.0	90.0	90.0	90.0	90.0
	4 '- 6 "	90.0	90.0	90.0	90.0	90.0
	5 '- 0 "	90.0	90.0	90.0	90.0	90.0
	5 '- 6 "	90.0	90.0	90.0	90.0	90.0
	6 '- 0 "	90.0	90.0	90.0	90.0	90.0
10 '- 0 "	3 '- 6 "	90.0	90.0	90.0	90.0	90.0
	4 '- 0 "	90.0	90.0	90.0	90.0	90.0
	4 '- 6 "	90.0	90.0	90.0	90.0	90.0
	5 '- 0 "	90.0	90.0	90.0	90.0	90.0
	5 '- 6 "	90.0	90.0	90.0	90.0	90.0
	6 '- 0 "	90.0	90.0	90.0	90.0	90.0
10 '- 6 "	3 '- 6 "	90.0	90.0	90.0	90.0	90.0
	4 '- 0 "	90.0	90.0	90.0	90.0	90.0
	4 '- 6 "	90.0	90.0	90.0	90.0	90.0
	5 '- 0 "	90.0	90.0	90.0	90.0	90.0
	5 '- 6 "	90.0	90.0	90.0	90.0	90.0
	6 '- 0 "	90.0	90.0	90.0	90.0	90.0
11 '- 0 "	3 '- 6 "	90.0	90.0	90.0	90.0	90.0
	4 '- 0 "	90.0	90.0	90.0	90.0	90.0
	4 '- 6 "	90.0	90.0	90.0	90.0	90.0
	5 '- 0 "	90.0	90.0	90.0	90.0	90.0
	5 '- 6 "	90.0	90.0	90.0	90.0	90.0
	6 '- 0 "	90.0	90.0	90.0	90.0	90.0
11 '- 6 "	3 '- 6 "	90.0	90.0	90.0	90.0	90.0
	4 '- 0 "	90.0	90.0	90.0	90.0	90.0
	4 '- 6 "	90.0	90.0	90.0	90.0	90.0
	5 '- 0 "	90.0	90.0	90.0	90.0	90.0
	5 '- 6 "	90.0	90.0	90.0	90.0	90.0
	6 '- 0 "	90.0	90.0	90.0	90.0	90.0
12 '- 0 "	3 '- 6 "	90.0	90.0	90.0	90.0	90.0
	4 '- 0 "	90.0	90.0	90.0	90.0	90.0
	4 '- 6 "	90.0	90.0	90.0	90.0	90.0
	5 '- 0 "	90.0	90.0	90.0	90.0	90.0
	5 '- 6 "	90.0	90.0	90.0	90.0	90.0
	6 '- 0 "	90.0	90.0	90.0	90.0	90.0
12 '- 6 "	3 '- 6 "	90.0	90.0	90.0	90.0	90.0
	4 '- 0 "	90.0	90.0	90.0	90.0	90.0
	4 '- 6 "	90.0	90.0	90.0	90.0	90.0
	5 '- 0 "	90.0	90.0	90.0	90.0	90.0
	5 '- 6 "	90.0	90.0	90.0	90.0	90.0
	6 '- 0 "	90.0	90.0	90.0	90.0	90.0

* SEE CONNECTION DETAILS ON SHEETS 26 & 27 FOR FASTENERS QUANTITY & LOCATIONS AT MULLION.

** TYPE 1 CONNECTION:

CORRESPONDS TO CONTINUOUS TWIN MULLION SPAN INSTALLATIONS.

TYPE 2 CONNECTION:

CORRESPONDS TO SPLICED TWIN MULLION SPAN INSTALLATIONS.

FASTENERS TYPES

A - 1/2"Ø HILTI KWIK BOLT TZ ANCHOR W/ 3 1/4" Min. EMBEDMENT INTO 8" Min. THICK POURED CONCRETE (Min. f'c = 3 ksi) BEYOND ANY FINISH MATERIAL, W/ 6" MIN. EDGE DISTANCE.

A' - 1/2"Ø HILTI KWIK BOLT TZ ANCHOR W/ 3 1/4" Min. EMBEDMENT INTO 6" Min. THICK POURED CONCRETE (Min. f'c = 3 ksi) BEYOND ANY FINISH MATERIAL, W/ 7 1/2" MIN. EDGE DISTANCE.

B - 1/2"Ø HILTI KWIK BOLT 3 ANCHOR W/ 2 1/4" Min. EMBEDMENT INTO 6" Min. THICK POURED CONCRETE (Min. f'c = 3 ksi) BEYOND ANY FINISH MATERIAL, W/ 4 3/4" MIN. EDGE DISTANCE.

C - 1/2"Ø HILTI HUS-H SCREW ANCHOR W/ 3" Min. EMBEDMENT INTO 6" Min. THICK POURED CONCRETE (Min. f'c = 3 ksi) BEYOND ANY FINISH MATERIAL, W/ 5" MIN. EDGE DISTANCE.

D - 1/2"Ø-13 TYPE "F" GRADE 5 BOLT TO 1/2" MIN. THK. ASTM A-36 STEEL W/ 1" MIN. EDGE DISTANCE OR 1/2"Ø -13 SAE GALVANIZED STEEL GRADE 5 HHB THRU BOLT W/ NUT & LOCK WASHER TO 1/4" MIN. THK. ASTM A-36 STEEL W/ 1" MIN. EDGE DISTANCE.

FLORIDA BUILDING CODE (High Velocity Hurricane Zone)

HR-251 CAPTURED CURTAIN WALL SYSTEM
SMALL MISSILE IMPACT INSULATED GLASS

Oldcastle Glass® Engineered Products
803 AIRPORT RD. TERRELL TX 75160
PHONE: (972) 551-6100

REV. No	DESCRIPTION	DATE	REV. No	DESCRIPTION	DATE
1			3		
2			4		

DRAWN BY L.G.

05/06/09 DATE

09-070 DRAWING No

SHEET 13 OF 36

TILTECO INC.
TILLIT TESTING & ENGINEERING COMPANY
6355 N.W. 36th. St., Ste. 305, VIRGINIA GARDENS, FLORIDA 33166
Phone : (305)871-1530 . Fax : (305)871-1531
e-mail: tilteco@aol.com
EB-0006719
WALTER A. TILLIT Jr., P.E.
FLORIDA Lic. # 44167

© 2009 TILTECO INC.

WALTER A. TILLIT JR. P.E. STAMP LICENSE No. 44167 STATE OF FLORIDA PROFESSIONAL ENGINEER

MIAMI-DADE STAMP

MARCH 24, 2010
09-0721.04

MAXIMUM PRESSURE RATING FOR JAMBS AT SINGLE SPAN CURTAIN WALL FASTENED W/ 3/8"Ø FASTENERS (SEE ALSO SHEETS 15, 16 & 17)

OPTION #1 : (1) FASTENER CONNECTION

MAXIMUM MULLION SPAN	EFFECTIVE SPACING	MAXIMUM DESIGN LOAD W (psf): POURED CONCRETE (Min. f'c = 3ksi) SUBSTRATE			GROUT FILLED CONCRETE BLOCK SUBSTRATE		1/4" Min. THK ASTM A-36 STEEL SUBSTRATE
		FASTENER TYPES			FASTENER TYPES		FASTENER
"L" (Ft-in)	"b" (Ft-in)	E	F	G	H	I	J
8 '- 5 "	3 '- 6 "	72.0	72.0	74.3	72.0	74.3	90.0
	4 '- 0 "	63.0	63.0	65.0	63.0	65.0	89.1
	4 '- 6 "	56.0	56.0	57.8	56.0	57.8	79.2
	5 '- 0 "	50.4	50.4	52.0	50.4	52.0	71.3
	5 '- 6 "	45.8	45.8	47.3	45.8	47.3	64.8
	6 '- 0 "	42.0	42.0	43.3	42.0	43.3	59.4
8 '- 6 "	3 '- 6 "	71.3	71.3	73.6	71.3	73.6	90.0
	4 '- 0 "	62.4	62.4	64.4	62.4	64.4	88.3
	4 '- 6 "	55.4	55.4	57.2	55.4	57.2	78.5
	5 '- 0 "	49.9	49.9	51.5	49.9	51.5	70.6
	5 '- 6 "	45.4	45.4	46.8	45.4	46.8	64.2
	6 '- 0 "	41.6	41.6	42.9	41.6	42.9	58.9
9 '- 0 "	3 '- 6 "	67.3	67.3	69.5	67.3	69.5	90.0
	4 '- 0 "	58.9	58.9	60.8	58.9	60.8	83.4
	4 '- 6 "	52.4	52.4	54.0	52.4	54.0	74.1
	5 '- 0 "	47.1	47.1	48.6	47.1	48.6	66.7
	5 '- 6 "	42.8	42.8	44.2	42.8	44.2	60.6
	6 '- 0 "	39.3	39.3	40.5	39.3	40.5	55.6
9 '- 6 "	3 '- 6 "	63.8	63.8	65.8	63.8	65.8	90.0
	4 '- 0 "	55.8	55.8	57.6	55.8	57.6	79.0
	4 '- 6 "	49.6	49.6	51.2	49.6	51.2	70.2
	5 '- 0 "	44.7	44.7	46.1	44.7	46.1	63.2
	5 '- 6 "	40.6	40.6	41.9	40.6	41.9	57.4
	6 '- 0 "	37.2	37.2	38.4	37.2	38.4	52.7
10 '- 0 "	3 '- 6 "	60.6	60.6	62.5	60.6	62.5	85.8
	4 '- 0 "	53.0	53.0	54.7	53.0	54.7	75.0
	4 '- 6 "	47.1	47.1	48.6	47.1	48.6	66.7
	5 '- 0 "	42.4	42.4	43.8	42.4	43.8	60.0
	5 '- 6 "	38.6	38.6	39.8	38.6	39.8	54.6
	6 '- 0 "	35.3	35.3	36.5	35.3	36.5	50.0
10 '- 6 "	3 '- 6 "	57.7	57.7	59.5	57.7	59.5	81.7
	4 '- 0 "	50.5	50.5	52.1	50.5	52.1	71.5
	4 '- 6 "	44.9	44.9	46.3	44.9	46.3	63.5
	5 '- 0 "	40.4	40.4	41.7	40.4	41.7	57.2
	5 '- 6 "	36.7	36.7	37.9	36.7	37.9	52.0
	6 '- 0 "	33.7	33.7	34.7	33.7	34.7	47.6
11 '- 0 "	3 '- 6 "	55.1	55.1	56.8	55.1	56.8	78.0
	4 '- 0 "	48.2	48.2	49.7	48.2	49.7	68.2
	4 '- 6 "	42.8	42.8	44.2	42.8	44.2	60.6
	5 '- 0 "	38.6	38.6	39.8	38.6	39.8	54.6
	5 '- 6 "	35.1	35.1	36.2	35.1	36.2	49.6
	6 '- 0 "	32.1	32.1	33.2	32.1	33.2	45.5
11 '- 6 "	3 '- 6 "	52.7	52.7	54.4	52.7	54.4	74.6
	4 '- 0 "	46.1	46.1	47.6	46.1	47.6	65.2
	4 '- 6 "	41.0	41.0	42.3	41.0	42.3	58.0
	5 '- 0 "	36.9	36.9	38.1	36.9	38.1	52.2
	5 '- 6 "	33.5	33.5	34.6	33.5	34.6	47.5
	6 '- 0 "	30.7	30.7	31.7	30.7	31.7	43.5
12 '- 0 "	3 '- 6 "	50.5	50.5	52.1	50.5	52.1	71.5
	4 '- 0 "	44.2	44.2	45.6	44.2	45.6	62.5
	4 '- 6 "	39.3	39.3	40.5	39.3	40.5	55.6
	5 '- 0 "	35.3	35.3	36.5	35.3	36.5	50.0
	5 '- 6 "	32.1	32.1	33.2	32.1	33.2	45.5
	6 '- 0 "	29.5	29.5	30.4	29.5	30.4	41.7
12 '- 6 "	3 '- 6 "	48.5	48.5	50.0	48.5	50.0	68.6
	4 '- 0 "	42.4	42.4	43.8	42.4	43.8	60.0
	4 '- 6 "	37.7	37.7	38.9	37.7	38.9	53.4
	5 '- 0 "	33.9	33.9	35.0	33.9	35.0	48.0
	5 '- 6 "	30.9	30.9	31.8	30.9	31.8	43.7
	6 '- 0 "	28.3	28.3	29.2	28.3	29.2	40.0

OPTION #2 : 2 FASTENER CONNECTION

MAXIMUM MULLION SPAN	EFFECTIVE SPACING	MAXIMUM DESIGN LOAD W (psf): POURED CONCRETE (Min. f'c = 3ksi) SUBSTRATE			GROUT FILLED CONCRETE BLOCK SUBSTRATE		1/4" Min. THK ASTM A-36 STEEL SUBSTRATE
		FASTENER TYPES			FASTENER TYPES		FASTENER
"L" (Ft-in)	"b" (Ft-in)	E	F	G	H	I	J
8 '- 5 "	3 '- 6 "	90.0	90.0	90.0	90.0	90.0	90.0
	4 '- 0 "	90.0	90.0	90.0	90.0	90.0	90.0
	4 '- 6 "	90.0	90.0	90.0	90.0	90.0	90.0
	5 '- 0 "	90.0	90.0	90.0	90.0	90.0	90.0
	5 '- 6 "	90.0	90.0	90.0	90.0	90.0	90.0
	6 '- 0 "	84.0	84.0	86.7	84.0	86.7	90.0
8 '- 6 "	3 '- 6 "	90.0	90.0	90.0	90.0	90.0	90.0
	4 '- 0 "	90.0	90.0	90.0	90.0	90.0	90.0
	4 '- 6 "	90.0	90.0	90.0	90.0	90.0	90.0
	5 '- 0 "	90.0	90.0	90.0	90.0	90.0	90.0
	5 '- 6 "	90.0	90.0	90.0	90.0	90.0	90.0
	6 '- 0 "	83.2	83.2	85.8	83.2	85.8	90.0
9 '- 0 "	3 '- 6 "	90.0	90.0	90.0	90.0	90.0	90.0
	4 '- 0 "	90.0	90.0	90.0	90.0	90.0	90.0
	4 '- 6 "	90.0	90.0	90.0	90.0	90.0	90.0
	5 '- 0 "	90.0	90.0	90.0	90.0	90.0	90.0
	5 '- 6 "	85.7	85.7	88.4	85.7	88.4	90.0
	6 '- 0 "	78.6	78.6	81.0	78.6	81.0	90.0
9 '- 6 "	3 '- 6 "	90.0	90.0	90.0	90.0	90.0	90.0
	4 '- 0 "	90.0	90.0	90.0	90.0	90.0	90.0
	4 '- 6 "	90.0	90.0	90.0	90.0	90.0	90.0
	5 '- 0 "	89.3	89.3	90.0	89.3	90.0	90.0
	5 '- 6 "	81.2	81.2	83.8	81.2	83.8	90.0
	6 '- 0 "	74.4	74.4	76.8	74.4	76.8	90.0
10 '- 0 "	3 '- 6 "	90.0	90.0	90.0	90.0	90.0	90.0
	4 '- 0 "	90.0	90.0	90.0	90.0	90.0	90.0
	4 '- 6 "	90.0	90.0	90.0	90.0	90.0	90.0
	5 '- 0 "	84.8	84.8	87.5	84.8	87.5	90.0
	5 '- 6 "	77.1	77.1	79.6	77.1	79.6	90.0
	6 '- 0 "	70.7	70.7	72.9	70.7	72.9	90.0
10 '- 6 "	3 '- 6 "	90.0	90.0	90.0	90.0	90.0	90.0
	4 '- 0 "	90.0	90.0	90.0	90.0	90.0	90.0
	4 '- 6 "	89.8	89.8	90.0	89.8	90.0	90.0
	5 '- 0 "	80.8	80.8	83.4	80.8	83.4	90.0
	5 '- 6 "	73.5	73.5	75.8	73.5	75.8	90.0
	6 '- 0 "	67.3	67.3	69.5	67.3	69.5	90.0
11 '- 0 "	3 '- 6 "	90.0	90.0	90.0	90.0	90.0	90.0
	4 '- 0 "	90.0	90.0	90.0	90.0	90.0	90.0
	4 '- 6 "	85.7	85.7	88.4	85.7	88.4	90.0
	5 '- 0 "	77.1	77.1	79.6	77.1	79.6	90.0
	5 '- 6 "	70.1	70.1	72.3	70.1	72.3	90.0
	6 '- 0 "	64.3	64.3	66.3	64.3	66.3	90.0
11 '- 6 "	3 '- 6 "	90.0	90.0	90.0	90.0	90.0	90.0
	4 '- 0 "	90.0	90.0	90.0	90.0	90.0	90.0
	4 '- 6 "	82.0	82.0	84.6	82.0	84.6	90.0
	5 '- 0 "	73.8	73.8	76.1	73.8	76.1	90.0
	5 '- 6 "	67.1	67.1	69.2	67.1	69.2	90.0
	6 '- 0 "	61.5	61.5	63.4	61.5	63.4	87.0
12 '- 0 "	3 '- 6 "	90.0	90.0	90.0	90.0	90.0	90.0
	4 '- 0 "	88.4	88.4	90.0	88.4	90.0	90.0
	4 '- 6 "	78.6	78.6	81.0	78.6	81.0	90.0
	5 '- 0 "	70.7	70.7	72.9	70.7	72.9	90.0
	5 '- 6 "	64.3	64.3	66.3	64.3	66.3	90.0
	6 '- 0 "	58.9	58.9	60.8	58.9	60.8	83.4
12 '- 6 "	3 '- 6 "	90.0	90.0	90.0	90.0	90.0	90.0
	4 '- 0 "	84.8	84.8	87.5	84.8	87.5	90.0
	4 '- 6 "	75.4	75.4	77.8	75.4	77.8	90.0
	5 '- 0 "	67.9	67.9	70.0	67.9	70.0	90.0
	5 '- 6 "	61.7	61.7	63.7	61.7	63.7	87.3
	6 '- 0 "	56.6	56.6	58.4	56.6	58.4	80.0

OPTION #3 : 3 FASTENER CONNECTION

MAXIMUM MULLION SPAN	EFFECTIVE SPACING	MAXIMUM DESIGN LOAD W (psf): POURED CONCRETE (Min. f'c = 3ksi) SUBSTRATE			GROUT FILLED CONCRETE BLOCK SUBSTRATE		1/4" Min. THK ASTM A-36 STEEL SUBSTRATE
		FASTENER TYPES			FASTENER TYPES		FASTENER
"L" (Ft-in)	"b" (Ft-in)	E	F	G	H	I	J
8 '- 5 "	3 '- 6 "	90.0	90.0	90.0	90.0	90.0	90.0
	4 '- 0 "	90.0	90.0	90.0	90.0	90.0	90.0
	4 '- 6 "	90.0	90.0	90.0	90.0	90.0	90.0
	5 '- 0 "	90.0	90.0	90.0	90.0	90.0	90.0
	5 '- 6 "	90.0	90.0	90.0	90.0	90.0	90.0
	6 '- 0 "	90.0	90.0	90.0	90.0	90.0	90.0
8 '- 6 "	3 '- 6 "	90.0	90.0	90.0	90.0	90.0	90.0
	4 '- 0 "	90.0	90.0	90.0	90.0	90.0	90.0
	4 '- 6 "	90.0	90.0	90.0	90.0	90.0	90.0
	5 '- 0 "	90.0	90.0	90.0	90.0	90.0	90.0
	5 '- 6 "	90.0	90.0	90.0	90.0	90.0	90.0
	6 '- 0 "	90.0	90.0	90.0	90.0	90.0	90.0
9 '- 0 "	3 '- 6 "	90.0	90.0	90.0	90.0	90.0	90.0
	4 '- 0 "	90.0	90.0	90.0	90.0	90.0	90.0
	4 '- 6 "	90.0	90.0	90.0	90.0	90.0	90.0
	5 '- 0 "	90.0	90.0	90.0	90.0	90.0	90.0
	5 '- 6 "	90.0	90.0	90.0	90.0	90.0	90.0
	6 '- 0 "	90.0	90.0	90.0	90.0	90.0	90.0
9 '- 6 "	3 '- 6 "	90.0	90.0	90.0	90.0	90.0	90.0
	4 '- 0 "	90.0	90.0	90.0	90.0	90.0	90.0
	4 '- 6 "	90.0	90.0	90.0	90.0	90.0	90.0
	5 '- 0 "	90.0	90.0	90.0	90.0	90.0	90.0
	5 '- 6 "	90.0	90.0	90.0	90.0	90.0	90.0
	6 '- 0 "	90.0	90.0	90.0	90.0	90.0	90.0
10 '- 0 "	3 '- 6 "	90.0	90.0	90.0	90.0	90.0	90.0
	4 '- 0 "	90.0	90.0	90.0	90.0	90.0	90.0
	4 '- 6 "	90.0	90.0	90.0	90.0	90.0	90.0
	5 '- 0 "	90.0	90.0	90.0	90.0	90.0	90.0
	5 '- 6 "	90.0	90.0	90.0	90.0	90.0	90.0
	6 '- 0 "	90.0	90.0	90.0	90.0	90.0	90.0
10 '- 6 "	3 '- 6 "	90.0	90.0	90.0	90.0	90.0	90.0
	4 '- 0 "	90.0	90.0	90.0	90.0	90.0	90.0
	4 '- 6 "	90.0	90.0	90.0	90.0	90.0	90.0
	5 '- 0 "	90.0	90.0	90.0	90.0	90.0	90.0
	5 '- 6 "	90.0	90.0	90.0	90.0	90.0	90.0
	6 '- 0 "	90.0	90.0	90.0	90.0	90.0	90.0
11 '- 0 "	3 '- 6 "	90.0	90.0	90.0	90.0	90.0	90.0
	4 '- 0 "	90.0	90.0	90.0	90.0	90.0	90.0
	4 '- 6 "	90.0	90.0	90.0	90.0	90.0	90.0
	5 '- 0 "	90.0	90.0	90.0	90.0	90.0	90.0
	5 '- 6 "	90.0	90.0	90.0	90.0	90.0	90.0
	6 '- 0 "	90.0	90.0	90.0	90.0	90.0	90.0
11 '- 6 "	3 '- 6 "	90.0	90.0	90.0	90.0	90.0	90.0
	4 '- 0 "	90.0	90.0	90.0	90.0	90.0	90.0
	4 '- 6 "	90.0	90.0	90.0	90.0	90.0	90.0
	5 '- 0 "	90.0	90.0	90.0	90.0	90.0	90.0
	5 '- 6 "	90.0	90.0	90.0	90.0	90.0	90.0
	6 '- 0 "	90.0	90.0	90.0	90.0	90.0	90.0
12 '- 0 "	3 '- 6 "	90.0	90.0	90.0	90.0	90.0	90.0
	4 '- 0 "	90.0	90.0	90.0	90.0	90.0	90.0
	4 '- 6 "	90.0	90.0	90.0	90.0	90.0	90.0
	5 '- 0 "	90.0	90.0	90.0	90.0	90.0	90.0
	5 '- 6 "	90.0	90.0	90.0	90.0	90.0	90.0
	6 '- 0 "	88.4	88.4	90.0	88.4	90.0	90.0
12 '- 6 "	3 '- 6 "	90.0	90.0	90.0	90.0	90.0	90.0
	4 '- 0 "	90.0	90.0	90.0	90.0	90.0	90.0
	4 '- 6 "	90.0	90.0	90.0	90.0	90.0	90.0
	5 '- 0 "	90.0	90.0	90.0	90.0	90.0	90.0
	5 '- 6 "	90.0	90.0	90.0	90.0	90.0	90.0
	6 '- 0 "	84.8	84.8	87.5	84.8	87.5	90.0

OPTION # 1 (ELEVATION)
(1) FASTENER CONNECTION

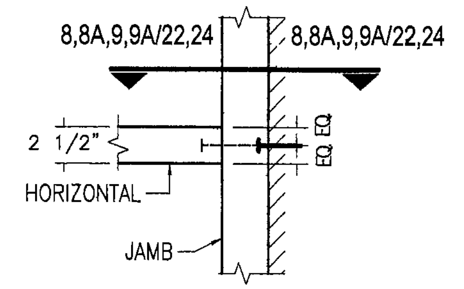

OPTION # 2 (ELEVATION)
(2) FASTENERS CONNECTION

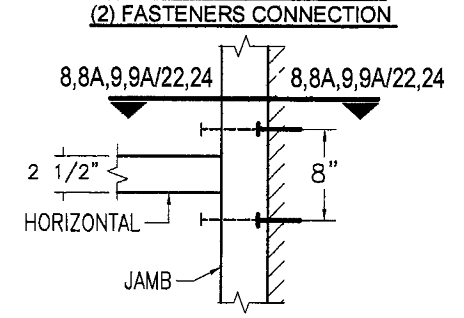

OPTION # 3 (ELEVATION)
(3) FASTENERS CONNECTION

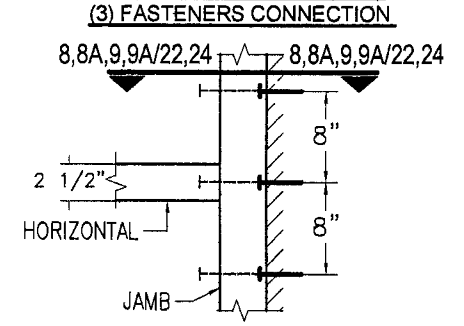

FASTENER TYPES:

E - 3/8"Ø HILTI KWIK BOLT TZ ANCHOR W/ 2" Min. EMBEDMENT INTO POURED CONCRETE (Min. f'c = 3 ksi) BEYOND ANY FINISH MATERIAL, W/ 4" MIN. EDGE DISTANCE.

F - 3/8"Ø HILTI KWIK BOLT 3 ANCHOR W/ 2 1/2" Min. EMBEDMENT INTO POURED CONCRETE (Min. f'c = 3 ksi) BEYOND ANY FINISH MATERIAL, W/ 4" MIN. EDGE DISTANCE.

G - 3/8"Ø HILTI HUS-H SCREW ANCHOR W/ 2 3/4" Min. EMBEDMENT INTO POURED CONCRETE (Min. f'c = 3 ksi) BEYOND ANY FINISH MATERIAL, W/ 5" MIN. EDGE DISTANCE.

H - 3/8"Ø HILTI KWIK BOLT 3 ANCHOR W/ 2 1/2" Min. EMBEDMENT INTO GROUT FILLED CONCRETE BLOCK BEYOND ANY FINISH MATERIAL, W/ 4" MIN. EDGE DISTANCE.

I - 3/8"Ø HILTI HUS-H SCREW ANCHOR W/ 3" Min. EMBEDMENT INTO GROUT FILLED CONCRETE BLOCK BEYOND ANY FINISH MATERIAL, W/ 4" MIN. EDGE DISTANCE.

J - 3/8"Ø-13 TYPE "F" GRADE 5 BOLT TO 3/8" MIN. THK. ASTM A-36 STEEL W/ 1" MIN. EDGE DISTANCE OR 3/8"Ø-13 SAE GRADE 5, GALVANIZED STEEL BOLT W/ LOCK WASHER & NUT TO 1/4" Min. THK. ASTM A-36 STEEL & MIN. E.D. = 3/4".

FLORIDA BUILDING CODE (High Velocity Hurricane Zone)

HR-251 CAPTURED CURTAIN WALL SYSTEM
SMALL MISSILE IMPACT INSULATED GLASS

Oldcastle Glass®
Engineered Products
803 AIRPORT RD. TERRELL TX 75160
PHONE: (972) 551-6100

DRAWN BY L.G.
05/06/09 DATE
09-070 DRAWING No
SHEET 14 OF 36

REV. No	DESCRIPTION	DATE	REV. No	DESCRIPTION	DATE
1	GENERAL	10/9/09	3		
2			4		

TILTECO INC.
TILLIT TESTING & ENGINEERING COMPANY
N.W. 36th St., Ste. 305, VIRGINIA GARDENS, FLORIDA 33166
Phone : (305)871-1530 . Fax : (305)871-1531
e-mail: tilteco@aol.com
EB-0006719
WALTER A. TILLIT Jr., P.E.
FLORIDA Lic. # 44167

© 2009 TILTECO INC.

WALTER A. TILLIT JR. LICENSE No. 44167 STATE OF FLORIDA PROFESSIONAL ENGINEER

MIAMI-DADE STAMP
Approved as complying with the Florida Building Code
Date MARCH 24 2010
NOA# 09-1201.04
Miami Dade Product Control
By Manuel Perez

MAXIMUM PRESSURE RATING FOR JAMBS AT TWIN SPAN CURTAIN WALL FASTENED W/ 3/8"Ø FASTENERS (CONTINUED)

OPTION #1 : (1) FASTENER CONNECTION

MAXIMUM MULLION SPAN	EFFECTIVE SPACING	MAXIMUM DESIGN LOAD W (psf)					
		POURED CONCRETE (Min. f'c = 3ksi) SUBSTRATE			GROUT FILLED CONCRETE BLOCK SUBSTRATE		1/4" Min. THK ASTM A-36 STEEL SUBSTRATE
		FASTENER TYPES			FASTENER TYPES		FASTENER
"L" (Ft-in)	"b" (Ft-in)	E	F	G	H	I	J
8 '- 5 "	3 '- 6 "	30.0	30.0	30.9	30.0	30.9	42.4
	4 '- 0 "	26.2	26.2	27.0	26.2	27.0	37.1
	4 '- 6 "	23.3	23.3	24.0	23.3	24.0	33.0
	5 '- 0 "	21.0	21.0	21.6	21.0	21.6	29.7
	5 '- 6 "	19.1	19.1	19.7	19.1	19.7	27.0
	6 '- 0 "	17.5	17.5	18.0	17.5	18.0	24.7
8 '- 6 "	3 '- 6 "	29.9	29.9	30.8	29.9	30.8	42.3
	4 '- 0 "	26.2	26.2	27.0	26.2	27.0	37.0
	4 '- 6 "	23.2	23.2	24.0	23.2	24.0	32.9
	5 '- 0 "	20.9	20.9	21.6	20.9	21.6	29.6
	5 '- 6 "	19.0	19.0	19.6	19.0	19.6	26.9
	6 '- 0 "	17.4	17.4	18.0	17.4	18.0	24.7
9 '- 0 "	3 '- 6 "	29.3	29.3	30.2	29.3	30.2	41.5
	4 '- 0 "	25.6	25.6	26.4	25.6	26.4	36.3
	4 '- 6 "	22.8	22.8	23.5	22.8	23.5	32.2
	5 '- 0 "	20.5	20.5	21.2	20.5	21.2	29.0
	5 '- 6 "	18.6	18.6	19.2	18.6	19.2	26.4
	6 '- 0 "	17.1	17.1	17.6	17.1	17.6	24.2
9 '- 6 "	3 '- 6 "	28.5	28.5	29.4	28.5	29.4	40.4
	4 '- 0 "	25.0	25.0	25.7	25.0	25.7	35.3
	4 '- 6 "	22.2	22.2	22.9	22.2	22.9	31.4
	5 '- 0 "	20.0	20.0	20.6	20.0	20.6	28.3
	5 '- 6 "	18.2	18.2	18.7	18.2	18.7	25.7
	6 '- 0 "	16.6	16.6	17.2	16.6	17.2	23.5
10 '- 0 "	3 '- 6 "	27.7	27.7	28.5	27.7	28.5	39.1
	4 '- 0 "	24.2	24.2	25.0	24.2	25.0	34.3
	4 '- 6 "	21.5	21.5	22.2	21.5	22.2	30.4
	5 '- 0 "	19.4	19.4	20.0	19.4	20.0	27.4
	5 '- 6 "	17.6	17.6	18.2	17.6	18.2	24.9
	6 '- 0 "	16.1	16.1	16.6	16.1	16.6	22.8
10 '- 6 "	3 '- 6 "	26.8	26.8	27.6	26.8	27.6	37.9
	4 '- 0 "	23.4	23.4	24.2	23.4	24.2	33.2
	4 '- 6 "	20.8	20.8	21.5	20.8	21.5	29.5
	5 '- 0 "	18.7	18.7	19.3	18.7	19.3	26.5
	5 '- 6 "	17.0	17.0	17.6	17.0	17.6	24.1
	6 '- 0 "	15.6	15.6	16.1	15.6	16.1	22.1
11 '- 0 "	3 '- 6 "	25.9	25.9	26.7	25.9	26.7	36.6
	4 '- 0 "	22.7	22.7	23.4	22.7	23.4	32.1
	4 '- 6 "	20.1	20.1	20.8	20.1	20.8	28.5
	5 '- 0 "	18.1	18.1	18.7	18.1	18.7	25.6
	5 '- 6 "	16.5	16.5	17.0	16.5	17.0	23.3
	6 '- 0 "	15.1	15.1	15.6	15.1	15.6	21.4
11 '- 6 "	3 '- 6 "	25.0	25.0	25.8	25.0	25.8	35.4
	4 '- 0 "	21.9	21.9	22.6	21.9	22.6	31.0
	4 '- 6 "	19.5	19.5	20.1	19.5	20.1	27.5
	5 '- 0 "	17.5	17.5	18.1	17.5	18.1	24.8
	5 '- 6 "	15.9	15.9	16.4	15.9	16.4	22.5
	6 '- 0 "	14.6	14.6	15.1	14.6	15.1	20.7
12 '- 0 "	3 '- 6 "	24.2	24.2	24.9	24.2	24.9	34.2
	4 '- 0 "	21.2	21.2	21.8	21.2	21.8	29.9
	4 '- 6 "	18.8	18.8	19.4	18.8	19.4	26.6
	5 '- 0 "	16.9	16.9	17.5	16.9	17.5	24.0
	5 '- 6 "	15.4	15.4	15.9	15.4	15.9	21.8
	6 '- 0 "	14.1	14.1	14.6	14.1	14.6	20.0
12 '- 6 "	3 '- 6 "	23.4	23.4	24.1	23.4	24.1	33.1
	4 '- 0 "	20.5	20.5	21.1	20.5	21.1	28.9
	4 '- 6 "	18.2	18.2	18.8	18.2	18.8	25.7
	5 '- 0 "	16.4	16.4	16.9	16.4	16.9	23.2
	5 '- 6 "	14.9	14.9	15.3	14.9	15.3	21.0
	6 '- 0 "	13.6	13.6	14.1	13.6	14.1	19.3

OPTION #2 : (2) FASTENERS CONNECTION

MAXIMUM MULLION SPAN	EFFECTIVE SPACING	MAXIMUM DESIGN LOAD W (psf)					
		POURED CONCRETE (Min. f'c = 3ksi) SUBSTRATE			GROUT FILLED CONCRETE BLOCK SUBSTRATE		1/4" Min. THK ASTM A-36 STEEL SUBSTRATE
		FASTENER TYPES			FASTENER TYPES		FASTENER
"L" (Ft-in)	"b" (Ft-in)	E	F	G	H	I	J
8 '- 5 "	3 '- 6 "	59.9	59.9	61.8	59.9	61.8	84.8
	4 '- 0 "	52.4	52.4	54.1	52.4	54.1	74.2
	4 '- 6 "	46.6	46.6	48.1	46.6	48.1	66.0
	5 '- 0 "	41.9	41.9	43.3	41.9	43.3	59.4
	5 '- 6 "	38.1	38.1	39.3	38.1	39.3	54.0
	6 '- 0 "	35.0	35.0	36.1	35.0	36.1	49.5
8 '- 6 "	3 '- 6 "	59.8	59.8	61.7	59.8	61.7	84.6
	4 '- 0 "	52.3	52.3	54.0	52.3	54.0	74.0
	4 '- 6 "	46.5	46.5	48.0	46.5	48.0	65.8
	5 '- 0 "	41.8	41.8	43.2	41.8	43.2	59.2
	5 '- 6 "	38.0	38.0	39.2	38.0	39.2	53.8
	6 '- 0 "	34.9	34.9	36.0	34.9	36.0	49.3
9 '- 0 "	3 '- 6 "	58.6	58.6	60.4	58.6	60.4	82.9
	4 '- 0 "	51.3	51.3	52.9	51.3	52.9	72.5
	4 '- 6 "	45.6	45.6	47.0	45.6	47.0	64.5
	5 '- 0 "	41.0	41.0	42.3	41.0	42.3	58.0
	5 '- 6 "	37.3	37.3	38.5	37.3	38.5	52.8
	6 '- 0 "	34.2	34.2	35.3	34.2	35.3	48.4
9 '- 6 "	3 '- 6 "	57.0	57.0	58.9	57.0	58.9	80.7
	4 '- 0 "	49.9	49.9	51.5	49.9	51.5	70.6
	4 '- 6 "	44.4	44.4	45.8	44.4	45.8	62.8
	5 '- 0 "	39.9	39.9	41.2	39.9	41.2	56.5
	5 '- 6 "	36.3	36.3	37.5	36.3	37.5	51.4
	6 '- 0 "	33.3	33.3	34.3	33.3	34.3	47.1
10 '- 0 "	3 '- 6 "	55.3	55.3	57.1	55.3	57.1	78.3
	4 '- 0 "	48.4	48.4	49.9	48.4	49.9	68.5
	4 '- 6 "	43.0	43.0	44.4	43.0	44.4	60.9
	5 '- 0 "	38.7	38.7	40.0	38.7	40.0	54.8
	5 '- 6 "	35.2	35.2	36.3	35.2	36.3	49.8
	6 '- 0 "	32.3	32.3	33.3	32.3	33.3	45.7
10 '- 6 "	3 '- 6 "	53.6	53.6	55.3	53.6	55.3	75.8
	4 '- 0 "	46.9	46.9	48.3	46.9	48.3	66.3
	4 '- 6 "	41.7	41.7	43.0	41.7	43.0	58.9
	5 '- 0 "	37.5	37.5	38.7	37.5	38.7	53.1
	5 '- 6 "	34.1	34.1	35.2	34.1	35.2	48.2
	6 '- 0 "	31.2	31.2	32.2	31.2	32.2	44.2
11 '- 0 "	3 '- 6 "	51.8	51.8	53.4	51.8	53.4	73.3
	4 '- 0 "	45.3	45.3	46.7	45.3	46.7	64.1
	4 '- 6 "	40.3	40.3	41.5	40.3	41.5	57.0
	5 '- 0 "	36.2	36.2	37.4	36.2	37.4	51.3
	5 '- 6 "	33.0	33.0	34.0	33.0	34.0	46.6
	6 '- 0 "	30.2	30.2	31.2	30.2	31.2	42.7
11 '- 6 "	3 '- 6 "	50.0	50.0	51.6	50.0	51.6	70.8
	4 '- 0 "	43.8	43.8	45.2	43.8	45.2	62.0
	4 '- 6 "	38.9	38.9	40.2	38.9	40.2	55.1
	5 '- 0 "	35.0	35.0	36.1	35.0	36.1	49.6
	5 '- 6 "	31.8	31.8	32.9	31.8	32.9	45.1
	6 '- 0 "	29.2	29.2	30.1	29.2	30.1	41.3
12 '- 0 "	3 '- 6 "	48.4	48.4	49.9	48.4	49.9	68.4
	4 '- 0 "	42.3	42.3	43.7	42.3	43.7	59.9
	4 '- 6 "	37.6	37.6	38.8	37.6	38.8	53.2
	5 '- 0 "	33.9	33.9	34.9	33.9	34.9	47.9
	5 '- 6 "	30.8	30.8	31.7	30.8	31.7	43.5
	6 '- 0 "	28.2	28.2	29.1	28.2	29.1	39.9
12 '- 6 "	3 '- 6 "	46.7	46.7	48.2	46.7	48.2	66.2
	4 '- 0 "	40.9	40.9	42.2	40.9	42.2	57.9
	4 '- 6 "	36.4	36.4	37.5	36.4	37.5	51.5
	5 '- 0 "	32.7	32.7	33.8	32.7	33.8	46.3
	5 '- 6 "	29.7	29.7	30.7	29.7	30.7	42.1
	6 '- 0 "	27.3	27.3	28.1	27.3	28.1	38.6

OPTION #3 : (3) FASTENERS CONNECTION

MAXIMUM MULLION SPAN	EFFECTIVE SPACING	MAXIMUM DESIGN LOAD W (psf)					
		POURED CONCRETE (Min. f'c = 3ksi) SUBSTRATE			GROUT FILLED CONCRETE BLOCK SUBSTRATE		1/4" Min. THK ASTM A-36 STEEL SUBSTRATE
		FASTENER TYPES			FASTENER TYPES		FASTENER
"L" (Ft-in)	"b" (Ft-in)	E	F	G	H	I	J
8 '- 5 "	3 '- 6 "	89.9	89.9	90.0	89.9	90.0	90.0
	4 '- 0 "	78.7	78.7	81.1	78.7	81.1	90.0
	4 '- 6 "	69.9	69.9	72.1	69.9	72.1	90.0
	5 '- 0 "	62.9	62.9	64.9	62.9	64.9	89.0
	5 '- 6 "	57.2	57.2	59.0	57.2	59.0	80.9
	6 '- 0 "	52.4	52.4	54.1	52.4	54.1	74.2
8 '- 6 "	3 '- 6 "	89.7	89.7	90.0	89.7	90.0	90.0
	4 '- 0 "	78.5	78.5	80.9	78.5	80.9	90.0
	4 '- 6 "	69.7	69.7	72.0	69.7	72.0	90.0
	5 '- 0 "	62.8	62.8	64.8	62.8	64.8	88.8
	5 '- 6 "	57.1	57.1	58.9	57.1	58.9	80.7
	6 '- 0 "	52.3	52.3	54.0	52.3	54.0	74.0
9 '- 0 "	3 '- 6 "	87.9	87.9	90.0	87.9	90.0	90.0
	4 '- 0 "	76.9	76.9	79.3	76.9	79.3	90.0
	4 '- 6 "	68.4	68.4	70.5	68.4	70.5	90.0
	5 '- 0 "	61.5	61.5	63.5	61.5	63.5	87.1
	5 '- 6 "	55.9	55.9	57.7	55.9	57.7	79.1
	6 '- 0 "	51.3	51.3	52.9	51.3	52.9	72.5
9 '- 6 "	3 '- 6 "	85.6	85.6	88.3	85.6	88.3	90.0
	4 '- 0 "	74.9	74.9	77.2	74.9	77.2	90.0
	4 '- 6 "	66.6	66.6	68.7	66.6	68.7	90.0
	5 '- 0 "	59.9	59.9	61.8	59.9	61.8	84.8
	5 '- 6 "	54.5	54.5	56.2	54.5	56.2	77.1
	6 '- 0 "	49.9	49.9	51.5	49.9	51.5	70.6
10 '- 0 "	3 '- 6 "	83.0	83.0	85.6	83.0	85.6	90.0
	4 '- 0 "	72.6	72.6	74.9	72.6	74.9	90.0
	4 '- 6 "	64.6	64.6	66.6	64.6	66.6	90.0
	5 '- 0 "	58.1	58.1	59.9	58.1	59.9	82.2
	5 '- 6 "	52.8	52.8	54.5	52.8	54.5	74.7
	6 '- 0 "	48.4	48.4	49.9	48.4	49.9	68.5
10 '- 6 "	3 '- 6 "	80.3	80.3	82.9	80.3	82.9	90.0
	4 '- 0 "	70.3	70.3	72.5	70.3	72.5	90.0
	4 '- 6 "	62.5	62.5	64.5	62.5	64.5	88.4
	5 '- 0 "	56.2	56.2	58.0	56.2	58.0	79.6
	5 '- 6 "	51.1	51.1	52.7	51.1	52.7	72.3
	6 '- 0 "	46.9	46.9	48.3	46.9	48.3	66.3
11 '- 0 "	3 '- 6 "	77.7	77.7	80.1	77.7	80.1	90.0
	4 '- 0 "	68.0	68.0	70.1	68.0	70.1	90.0
	4 '- 6 "	60.4	60.4	62.3	60.4	62.3	85.5
	5 '- 0 "	54.4	54.4	56.1	54.4	56.1	76.9
	5 '- 6 "	49.4	49.4	51.0	49.4	51.0	69.9
	6 '- 0 "	45.3	45.3	46.7	45.3	46.7	64.1
11 '- 6 "	3 '- 6 "	75.1	75.1	77.4	75.1	77.4	90.0
	4 '- 0 "	65.7	65.7	67.8	65.7	67.8	90.0
	4 '- 6 "	58.4	58.4	60.2	58.4	60.2	82.6
	5 '- 0 "	52.5	52.5	54.2	52.5	54.2	74.4
	5 '- 6 "	47.8	47.8	49.3	47.8	49.3	67.6
	6 '- 0 "	43.8	43.8	45.2	43.8	45.2	62.0
12 '- 0 "	3 '- 6 "	72.5	72.5	74.8	72.5	74.8	90.0
	4 '- 0 "	63.5	63.5	65.5	63.5	65.5	89.8
	4 '- 6 "	56.4	56.4	58.2	56.4	58.2	79.8
	5 '- 0 "	50.8	50.8	52.4	50.8	52.4	71.9
	5 '- 6 "	46.2	46.2	47.6	46.2	47.6	65.3
	6 '- 0 "	42.3	42.3	43.7	42.3	43.7	59.9
12 '- 6 "	3 '- 6 "	70.1	70.1	72.3	70.1	72.3	90.0
	4 '- 0 "	61.4	61.4	63.3	61.4	63.3	86.8
	4 '- 6 "	54.5	54.5	56.3	54.5	56.3	77.2
	5 '- 0 "	49.1	49.1	50.6	49.1	50.6	69.5
	5 '- 6 "	44.6	44.6	46.0	44.6	46.0	63.1
	6 '- 0 "	40.9	40.9	42.2	40.9	42.2	57.9

OPTION # 1 (ELEVATION)
(1) FASTENER CONNECTION

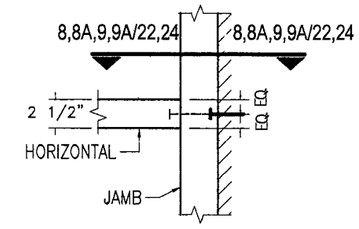

OPTION # 2 (ELEVATION)
(2) FASTENERS CONNECTION

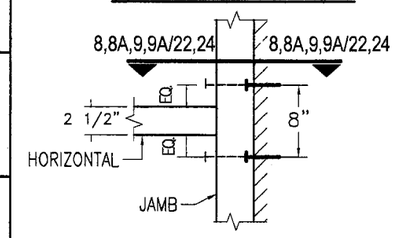

OPTION # 3 (ELEVATION)
(3) FASTENERS CONNECTION

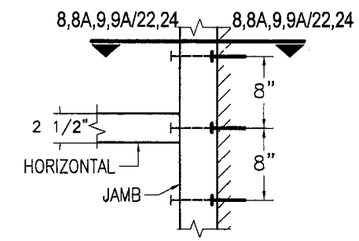

FASTENER TYPES:

E - 3/8"Ø HILTI KWIK BOLT TZ ANCHOR W/ 2" Min. EMBEDMENT INTO POURED CONCRETE (Min. f'c = 3 ksi) BEYOND ANY FINISH MATERIAL, W/ 4" MIN. EDGE DISTANCE.

F - 3/8"Ø HILTI KWIK BOLT 3 ANCHOR W/ 2 1/2" Min. EMBEDMENT INTO POURED CONCRETE (Min. f'c = 3 ksi) BEYOND ANY FINISH MATERIAL, W/ 4" MIN. EDGE DISTANCE.

G - 3/8"Ø HILTI HUS-H SCREW ANCHOR W/ 2 3/4" Min. EMBEDMENT INTO POURED CONCRETE (Min. f'c = 3 ksi) BEYOND ANY FINISH MATERIAL, W/ 5" MIN. EDGE DISTANCE.

H - 3/8"Ø HILTI KWIK BOLT 3 ANCHOR W/ 2 1/2" Min. EMBEDMENT INTO GROUT FILLED CONCRETE BLOCK BEYOND ANY FINISH MATERIAL, W/ 4" MIN. EDGE DISTANCE.

I - 3/8"Ø HILTI HUS-H SCREW ANCHOR W/ 3" Min. EMBEDMENT INTO GROUT FILLED CONCRETE BLOCK BEYOND ANY FINISH MATERIAL, W/ 4" MIN. EDGE DISTANCE.

J - 3/8"Ø-13 TYPE "F" GRADE 5 BOLT TO 3/8" MIN. THK. ASTM A-36 STEEL W/ 1" MIN. EDGE DISTANCE OR 3/8"Ø-13 SAE GRADE 5, GALVANIZED STEEL BOLT W/ LOCK WASHER & NUT TO 1/4" MIN. THK. ASTM A-36 STEEL & MIN. E.D. = 3/4".

FLORIDA BUILDING CODE (High Velocity Hurricane Zone)

DRAWN BY L.G. | 05/06/09 DATE | 09-070 DRAWING No | SHEET 15 OF 36

HR-251 CAPTURED CURTAIN WALL SYSTEM
SMALL MISSILE IMPACT INSULATED GLASS

Oldcastle Glass®
Engineered Products
803 AIRPORT RD. TERRELL TX 75160
PHONE: (972) 551-6100

REV. No	DESCRIPTION	DATE	REV. No	DESCRIPTION	DATE
1			3		
2			4		

© 2009 TILTECO INC.

TILTECO INC.
TILLIT TESTING & ENGINEERING COMPANY
6895 N.W. 36th. St., Ste. 305, VIRGINIA GARDENS, FLORIDA 33166
Phone : (305)871-1530 . Fax : (305)871-1531
e-mail: tilteco@aol.com
EB-0006719
WALTER A. TILLIT Jr., P.E.
FLORIDA Lic. # 44167

WALTER A. TILLIT JR. LICENSE No. 44167 STATE OF FLORIDA PROFESSIONAL ENGINEER

MIAME STAMP

MIAMI-DADE STAMP

Approved as complying with the Florida Building Code
Date MARCH 24, 2010
NOA# 09-0717.04
Miami-Dade Product Control
Division
By

MAXIMUM PRESSURE RATING FOR JAMBS AT SINGLE SPAN CURTAIN WALL FASTENED W/ 1/2"Ø FASTENERS (CONTINUED)

OPTION #1 : (1) FASTENER CONNECTION

MAXIMUM MULLION SPAN	EFFECTIVE SPACING	MAXIMUM DESIGN LOAD W (psf)					
		POURED CONCRETE (Min. f'c = 3ksi) SUBSTRATE			GROUT FILLED CONCRETE BLOCK SUBSTRATE		1/4" Min. THK ASTM A-36 STEEL SUBSTRATE
		FASTENER TYPES			FASTENER TYPES		FASTENER
"L" (Ft-in)	"b" (Ft-in)	E	F	G	H	I	J
8 '- 5 "	3 '- 6 "	90.0	90.0	90.0	90.0	90.0	90.0
	4 '- 0 "	90.0	90.0	90.0	90.0	90.0	90.0
	4 '- 6 "	90.0	90.0	90.0	90.0	90.0	90.0
	5 '- 0 "	90.0	90.0	90.0	90.0	90.0	90.0
	5 '- 6 "	90.0	90.0	90.0	90.0	90.0	90.0
	6 '- 0 "	90.0	90.0	90.0	85.5	90.0	90.0
8 '- 6 "	3 '- 6 "	90.0	90.0	90.0	90.0	90.0	90.0
	4 '- 0 "	90.0	90.0	90.0	90.0	90.0	90.0
	4 '- 6 "	90.0	90.0	90.0	90.0	90.0	90.0
	5 '- 0 "	90.0	90.0	90.0	90.0	90.0	90.0
	5 '- 6 "	90.0	90.0	90.0	90.0	90.0	90.0
	6 '- 0 "	90.0	90.0	90.0	84.7	90.0	90.0
9 '- 0 "	3 '- 6 "	90.0	90.0	90.0	90.0	90.0	90.0
	4 '- 0 "	90.0	90.0	90.0	90.0	90.0	90.0
	4 '- 6 "	90.0	90.0	90.0	90.0	90.0	90.0
	5 '- 0 "	90.0	90.0	90.0	90.0	90.0	90.0
	5 '- 6 "	90.0	90.0	90.0	87.3	90.0	90.0
	6 '- 0 "	90.0	90.0	90.0	80.0	90.0	90.0
9 '- 6 "	3 '- 6 "	90.0	90.0	90.0	90.0	90.0	90.0
	4 '- 0 "	90.0	90.0	90.0	90.0	90.0	90.0
	4 '- 6 "	90.0	90.0	90.0	90.0	90.0	90.0
	5 '- 0 "	90.0	90.0	90.0	90.0	90.0	90.0
	5 '- 6 "	90.0	90.0	90.0	82.7	90.0	90.0
	6 '- 0 "	90.0	90.0	90.0	75.8	90.0	90.0
10 '- 0 "	3 '- 6 "	90.0	90.0	90.0	90.0	90.0	90.0
	4 '- 0 "	90.0	90.0	90.0	90.0	90.0	90.0
	4 '- 6 "	90.0	90.0	90.0	90.0	90.0	90.0
	5 '- 0 "	90.0	90.0	90.0	86.4	90.0	90.0
	5 '- 6 "	90.0	90.0	90.0	78.5	90.0	90.0
	6 '- 0 "	90.0	90.0	90.0	72.0	90.0	90.0
10 '- 6 "	3 '- 6 "	90.0	90.0	90.0	90.0	90.0	90.0
	4 '- 0 "	90.0	90.0	90.0	90.0	90.0	90.0
	4 '- 6 "	90.0	90.0	90.0	90.0	90.0	90.0
	5 '- 0 "	90.0	90.0	90.0	82.3	90.0	90.0
	5 '- 6 "	90.0	90.0	90.0	74.8	90.0	90.0
	6 '- 0 "	90.0	90.0	87.8	68.6	87.8	90.0
11 '- 0 "	3 '- 6 "	90.0	90.0	90.0	90.0	90.0	90.0
	4 '- 0 "	90.0	90.0	90.0	90.0	90.0	90.0
	4 '- 6 "	90.0	90.0	90.0	87.3	90.0	90.0
	5 '- 0 "	90.0	90.0	90.0	78.5	90.0	90.0
	5 '- 6 "	90.0	90.0	90.0	71.4	90.0	90.0
	6 '- 0 "	90.0	90.0	83.8	65.5	83.8	90.0
11 '- 6 "	3 '- 6 "	90.0	90.0	90.0	90.0	90.0	90.0
	4 '- 0 "	90.0	90.0	90.0	90.0	90.0	90.0
	4 '- 6 "	90.0	90.0	90.0	83.5	90.0	90.0
	5 '- 0 "	90.0	90.0	90.0	75.1	90.0	90.0
	5 '- 6 "	90.0	90.0	87.5	68.3	87.5	90.0
	6 '- 0 "	90.0	90.0	80.2	62.6	80.2	90.0
12 '- 0 "	3 '- 6 "	90.0	90.0	90.0	90.0	90.0	90.0
	4 '- 0 "	90.0	90.0	90.0	90.0	90.0	90.0
	4 '- 6 "	90.0	90.0	90.0	80.0	90.0	90.0
	5 '- 0 "	90.0	90.0	90.0	72.0	90.0	90.0
	5 '- 6 "	90.0	90.0	83.8	65.5	83.8	90.0
	6 '- 0 "	88.6	88.6	76.8	60.0	76.8	90.0
12 '- 6 "	3 '- 6 "	90.0	90.0	90.0	90.0	90.0	90.0
	4 '- 0 "	90.0	90.0	90.0	86.4	90.0	90.0
	4 '- 6 "	90.0	90.0	90.0	76.8	90.0	90.0
	5 '- 0 "	90.0	90.0	88.5	69.1	88.5	90.0
	5 '- 6 "	90.0	90.0	80.5	62.8	80.5	90.0
	6 '- 0 "	85.0	85.0	73.8	57.6	73.8	87.7

OPTION #2 : 2 FASTENER CONNECTION

MAXIMUM MULLION SPAN	EFFECTIVE SPACING	MAXIMUM DESIGN LOAD W (psf)					
		POURED CONCRETE (Min. f'c = 3ksi) SUBSTRATE			GROUT FILLED CONCRETE BLOCK SUBSTRATE		1/4" Min. THK ASTM A-36 STEEL SUBSTRATE
		FASTENER TYPES			FASTENER TYPES		FASTENER
"L" (Ft-in)	"b" (Ft-in)	E	F	G	H	I	J
8 '- 5 "	3 '- 6 "	90.0	90.0	90.0	90.0	90.0	90.0
	4 '- 0 "	90.0	90.0	90.0	90.0	90.0	90.0
	4 '- 6 "	90.0	90.0	90.0	90.0	90.0	90.0
	5 '- 0 "	90.0	90.0	90.0	90.0	90.0	90.0
	5 '- 6 "	90.0	90.0	90.0	90.0	90.0	90.0
	6 '- 0 "	90.0	90.0	90.0	90.0	90.0	90.0
8 '- 6 "	3 '- 6 "	90.0	90.0	90.0	90.0	90.0	90.0
	4 '- 0 "	90.0	90.0	90.0	90.0	90.0	90.0
	4 '- 6 "	90.0	90.0	90.0	90.0	90.0	90.0
	5 '- 0 "	90.0	90.0	90.0	90.0	90.0	90.0
	5 '- 6 "	90.0	90.0	90.0	90.0	90.0	90.0
	6 '- 0 "	90.0	90.0	90.0	90.0	90.0	90.0
9 '- 0 "	3 '- 6 "	90.0	90.0	90.0	90.0	90.0	90.0
	4 '- 0 "	90.0	90.0	90.0	90.0	90.0	90.0
	4 '- 6 "	90.0	90.0	90.0	90.0	90.0	90.0
	5 '- 0 "	90.0	90.0	90.0	90.0	90.0	90.0
	5 '- 6 "	90.0	90.0	90.0	90.0	90.0	90.0
	6 '- 0 "	90.0	90.0	90.0	90.0	90.0	90.0
9 '- 6 "	3 '- 6 "	90.0	90.0	90.0	90.0	90.0	90.0
	4 '- 0 "	90.0	90.0	90.0	90.0	90.0	90.0
	4 '- 6 "	90.0	90.0	90.0	90.0	90.0	90.0
	5 '- 0 "	90.0	90.0	90.0	90.0	90.0	90.0
	5 '- 6 "	90.0	90.0	90.0	90.0	90.0	90.0
	6 '- 0 "	90.0	90.0	90.0	90.0	90.0	90.0
10 '- 0 "	3 '- 6 "	90.0	90.0	90.0	90.0	90.0	90.0
	4 '- 0 "	90.0	90.0	90.0	90.0	90.0	90.0
	4 '- 6 "	90.0	90.0	90.0	90.0	90.0	90.0
	5 '- 0 "	90.0	90.0	90.0	90.0	90.0	90.0
	5 '- 6 "	90.0	90.0	90.0	90.0	90.0	90.0
	6 '- 0 "	90.0	90.0	90.0	90.0	90.0	90.0
10 '- 6 "	3 '- 6 "	90.0	90.0	90.0	90.0	90.0	90.0
	4 '- 0 "	90.0	90.0	90.0	90.0	90.0	90.0
	4 '- 6 "	90.0	90.0	90.0	90.0	90.0	90.0
	5 '- 0 "	90.0	90.0	90.0	90.0	90.0	90.0
	5 '- 6 "	90.0	90.0	90.0	90.0	90.0	90.0
	6 '- 0 "	90.0	90.0	90.0	90.0	90.0	90.0
11 '- 0 "	3 '- 6 "	90.0	90.0	90.0	90.0	90.0	90.0
	4 '- 0 "	90.0	90.0	90.0	90.0	90.0	90.0
	4 '- 6 "	90.0	90.0	90.0	90.0	90.0	90.0
	5 '- 0 "	90.0	90.0	90.0	90.0	90.0	90.0
	5 '- 6 "	90.0	90.0	90.0	90.0	90.0	90.0
	6 '- 0 "	90.0	90.0	90.0	90.0	90.0	90.0
11 '- 6 "	3 '- 6 "	90.0	90.0	90.0	90.0	90.0	90.0
	4 '- 0 "	90.0	90.0	90.0	90.0	90.0	90.0
	4 '- 6 "	90.0	90.0	90.0	90.0	90.0	90.0
	5 '- 0 "	90.0	90.0	90.0	90.0	90.0	90.0
	5 '- 6 "	90.0	90.0	90.0	90.0	90.0	90.0
	6 '- 0 "	90.0	90.0	90.0	90.0	90.0	90.0
12 '- 0 "	3 '- 6 "	90.0	90.0	90.0	90.0	90.0	90.0
	4 '- 0 "	90.0	90.0	90.0	90.0	90.0	90.0
	4 '- 6 "	90.0	90.0	90.0	90.0	90.0	90.0
	5 '- 0 "	90.0	90.0	90.0	90.0	90.0	90.0
	5 '- 6 "	90.0	90.0	90.0	90.0	90.0	90.0
	6 '- 0 "	90.0	90.0	90.0	90.0	90.0	90.0
12 '- 6 "	3 '- 6 "	90.0	90.0	90.0	90.0	90.0	90.0
	4 '- 0 "	90.0	90.0	90.0	90.0	90.0	90.0
	4 '- 6 "	90.0	90.0	90.0	90.0	90.0	90.0
	5 '- 0 "	90.0	90.0	90.0	90.0	90.0	90.0
	5 '- 6 "	90.0	90.0	90.0	90.0	90.0	90.0
	6 '- 0 "	90.0	90.0	90.0	90.0	90.0	90.0

OPTION # 1 (ELEVATION)
(1) FASTENER CONNECTION

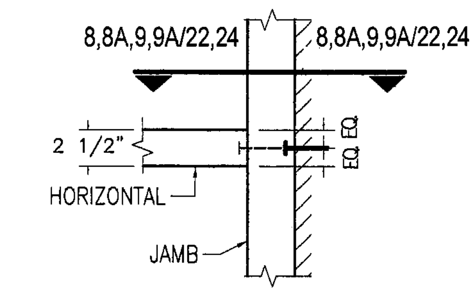

OPTION # 2 (ELEVATION)
(2) FASTENERS CONNECTION

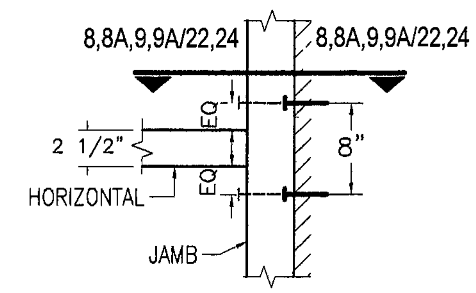

FASTENER TYPES:

K - 1/2"Ø HILTI KWIK BOLT TZ ANCHOR W/ 2" Min. EMBEDMENT INTO POURED CONCRETE (Min. f'c = 3 ksi) BEYOND ANY FINISH MATERIAL, W/ 4" MIN. EDGE DISTANCE.

L - 1/2"Ø HILTI KWIK BOLT 3 ANCHOR W/ 3 1/2" Min. EMBEDMENT INTO POURED CONCRETE (Min. f'c = 3 ksi) BEYOND ANY FINISH MATERIAL, W/ 4" MIN. EDGE DISTANCE.

M - 1/2"Ø HILTI HUS-H SCREW ANCHOR W/ 3" Min. EMBEDMENT INTO POURED CONCRETE (Min. f'c = 3 ksi) BEYOND ANY FINISH MATERIAL, W/ 4" MIN. EDGE DISTANCE.

N - 1/2"Ø HILTI KWIK BOLT 3 ANCHOR W/ 3 1/2" Min. EMBEDMENT INTO GROUT FILLED CONCRETE BLOCK BEYOND ANY FINISH MATERIAL, W/ 4" MIN. EDGE DISTANCE.

O - 1/2"Ø HILTI HUS-H SCREW ANCHOR W/ 3" Min. EMBEDMENT INTO GROUT FILLED CONCRETE BLOCK BEYOND ANY FINISH MATERIAL, W/ 4" MIN. EDGE DISTANCE.

P - 1/2"Ø-13 TYPE "F" GRADE 5 BOLT TO 1/2" MIN. THK. ASTM A-36 STEEL W/ 1" MIN. EDGE DISTANCE OR 1/2"Ø-13 SAE GRADE 5, GALVANIZED STEEL BOLT W/ LOCK WASHER & NUT TO 1/4" MIN. THK. ASTM A-36 STEEL & MIN. E.D. = 1".

FLORIDA BUILDING CODE (High Velocity Hurricane Zone)

HR-251 CAPTURED CURTAIN WALL SYSTEM
SMALL MISSILE IMPACT INSULATED GLASS

Oldcastle Glass®
Engineered Products
803 AIRPORT RD. TERRELL TX 75160
PHONE: (972) 551-6100

REV. No	DESCRIPTION	DATE	REV. No	DESCRIPTION	DATE
1	GENERAL		3		
2		10/9/09	4		

DRAWN BY L.G.
05/06/09 DATE
09-070 DRAWING No
SHEET 16 OF 36

© 2009 TILTECO INC.

TILTECO INC.
TILLIT TESTING & ENGINEERING COMPANY
5..5 N.W. 36th. St., Ste. 305, VIRGINIA GARDENS, FLORIDA 33166
Phone : (305)871-1530 . Fax : (305)871-1531
e-mail: tilteco@aol.com
EB-0006719
WALTER A. TILLIT Jr., P.E.
FLORIDA Lic. # 44167

WALTER A. TILLIT JR. LICENSE No. 44167 STATE OF FLORIDA PROFESSIONAL ENGINEER

MIAMI-DADE STAMP
MARCH 24 2010
09-0721.04

MAXIMUM PRESSURE RATING FOR JAMBS AT TWIN SPAN CURTAIN WALL FASTENED W/ 1/2"Ø FASTENERS (CONTINUED)

OPTION #1 : (1) FASTENER CONNECTION

MAXIMUM MULLION SPAN	EFFECTIVE SPACING	MAXIMUM DESIGN LOAD W (psf)					
		POURED CONCRETE (Min. f'c = 3ksi) SUBSTRATE			GROUT FILLED CONCRETE BLOCK SUBSTRATE		1/4" Min. THK ASTM A-36 STEEL SUBSTRATE
		FASTENER TYPES			FASTENER TYPES		FASTENER
"L" (Ft-in)	"b" (Ft-in)	K	L	M	N	O	P
8 '- 5 "	3 '- 6 "	90.0	90.0	78.2	61.0	78.2	90.0
	4 '- 0 "	78.8	78.8	68.4	53.4	68.4	81.3
	4 '- 6 "	70.1	70.1	60.8	47.5	60.8	72.3
	5 '- 0 "	63.1	63.1	54.7	42.7	54.7	65.0
	5 '- 6 "	57.3	57.3	49.7	38.8	49.7	59.1
	6 '- 0 "	52.5	52.5	45.6	35.6	45.6	54.2
8 '- 6 "	3 '- 6 "	89.9	89.9	78.0	60.9	78.0	90.0
	4 '- 0 "	78.6	78.6	68.2	53.3	68.2	81.1
	4 '- 6 "	69.9	69.9	60.6	47.4	60.6	72.1
	5 '- 0 "	62.9	62.9	54.6	42.6	54.6	64.9
	5 '- 6 "	57.2	57.2	49.6	38.7	49.6	59.0
	6 '- 0 "	52.4	52.4	45.5	35.5	45.5	54.1
9 '- 0 "	3 '- 6 "	88.1	88.1	76.4	59.7	76.4	90.0
	4 '- 0 "	77.1	77.1	66.9	52.2	66.9	79.5
	4 '- 6 "	68.5	68.5	59.4	46.4	59.4	70.7
	5 '- 0 "	61.6	61.6	53.5	41.8	53.5	63.6
	5 '- 6 "	56.0	56.0	48.6	38.0	48.6	57.8
	6 '- 0 "	51.4	51.4	44.6	34.8	44.6	53.0
9 '- 6 "	3 '- 6 "	85.7	85.7	74.4	58.1	74.4	88.4
	4 '- 0 "	75.0	75.0	65.1	50.8	65.1	77.4
	4 '- 6 "	66.7	66.7	57.9	45.2	57.9	68.8
	5 '- 0 "	60.0	60.0	52.1	40.7	52.1	61.9
	5 '- 6 "	54.6	54.6	47.3	37.0	47.3	56.3
	6 '- 0 "	50.0	50.0	43.4	33.9	43.4	51.6
10 '- 0 "	3 '- 6 "	83.2	83.2	72.2	56.3	72.2	85.8
	4 '- 0 "	72.8	72.8	63.1	49.3	63.1	75.1
	4 '- 6 "	64.7	64.7	56.1	43.8	56.1	66.7
	5 '- 0 "	58.2	58.2	50.5	39.4	50.5	60.1
	5 '- 6 "	52.9	52.9	45.9	35.9	45.9	54.6
	6 '- 0 "	48.5	48.5	42.1	32.9	42.1	50.0
10 '- 6 "	3 '- 6 "	80.5	80.5	69.9	54.5	69.9	83.0
	4 '- 0 "	70.4	70.4	61.1	47.7	61.1	72.7
	4 '- 6 "	62.6	62.6	54.3	42.4	54.3	64.6
	5 '- 0 "	56.4	56.4	48.9	38.2	48.9	58.1
	5 '- 6 "	51.2	51.2	44.5	34.7	44.5	52.8
	6 '- 0 "	47.0	47.0	40.7	31.8	40.7	48.4
11 '- 0 "	3 '- 6 "	77.8	77.8	67.5	52.7	67.5	80.3
	4 '- 0 "	68.1	68.1	59.1	46.1	59.1	70.2
	4 '- 6 "	60.5	60.5	52.5	41.0	52.5	62.4
	5 '- 0 "	54.5	54.5	47.3	36.9	47.3	56.2
	5 '- 6 "	49.5	49.5	43.0	33.6	43.0	51.1
	6 '- 0 "	45.4	45.4	39.4	30.8	39.4	46.8
11 '- 6 "	3 '- 6 "	75.2	75.2	65.3	51.0	65.3	77.6
	4 '- 0 "	65.8	65.8	57.1	44.6	57.1	67.9
	4 '- 6 "	58.5	58.5	50.8	39.6	50.8	60.3
	5 '- 0 "	52.7	52.7	45.7	35.7	45.7	54.3
	5 '- 6 "	47.9	47.9	41.5	32.4	41.5	49.4
	6 '- 0 "	43.9	43.9	38.1	29.7	38.1	45.3
12 '- 0 "	3 '- 6 "	72.7	72.7	63.1	49.3	63.1	75.0
	4 '- 0 "	63.6	63.6	55.2	43.1	55.2	65.6
	4 '- 6 "	56.5	56.5	49.1	38.3	49.1	58.3
	5 '- 0 "	50.9	50.9	44.2	34.5	44.2	52.5
	5 '- 6 "	46.3	46.3	40.1	31.3	40.1	47.7
	6 '- 0 "	42.4	42.4	36.8	28.7	36.8	43.7
12 '- 6 "	3 '- 6 "	70.3	70.3	61.0	47.6	61.0	72.5
	4 '- 0 "	61.5	61.5	53.4	41.7	53.4	63.4
	4 '- 6 "	54.7	54.7	47.4	37.0	47.4	56.4
	5 '- 0 "	49.2	49.2	42.7	33.3	42.7	50.7
	5 '- 6 "	44.7	44.7	38.8	30.3	38.8	46.1
	6 '- 0 "	41.0	41.0	35.6	27.8	35.6	42.3

OPTION #2 : (2) FASTENERS CONNECTION

MAXIMUM MULLION SPAN	EFFECTIVE SPACING	MAXIMUM DESIGN LOAD W (psf)					
		POURED CONCRETE (Min. f'c = 3ksi) SUBSTRATE			GROUT FILLED CONCRETE BLOCK SUBSTRATE		1/4" Min. THK ASTM A-36 STEEL SUBSTRATE
		FASTENER TYPES			FASTENER TYPES		FASTENER
"L" (Ft-in)	"b" (Ft-in)	K	L	M	N	O	P
8 '- 5 "	3 '- 6 "	90.0	90.0	90.0	90.0	90.0	90.0
	4 '- 0 "	90.0	90.0	90.0	90.0	90.0	90.0
	4 '- 6 "	90.0	90.0	90.0	90.0	90.0	90.0
	5 '- 0 "	90.0	90.0	90.0	85.4	90.0	90.0
	5 '- 6 "	90.0	90.0	90.0	77.7	90.0	90.0
	6 '- 0 "	90.0	90.0	90.0	71.2	90.0	90.0
8 '- 6 "	3 '- 6 "	90.0	90.0	90.0	90.0	90.0	90.0
	4 '- 0 "	90.0	90.0	90.0	90.0	90.0	90.0
	4 '- 6 "	90.0	90.0	90.0	90.0	90.0	90.0
	5 '- 0 "	90.0	90.0	90.0	85.2	90.0	90.0
	5 '- 6 "	90.0	90.0	90.0	77.5	90.0	90.0
	6 '- 0 "	90.0	90.0	90.0	71.0	90.0	90.0
9 '- 0 "	3 '- 6 "	90.0	90.0	90.0	90.0	90.0	90.0
	4 '- 0 "	90.0	90.0	90.0	90.0	90.0	90.0
	4 '- 6 "	90.0	90.0	90.0	90.0	90.0	90.0
	5 '- 0 "	90.0	90.0	90.0	83.5	90.0	90.0
	5 '- 6 "	90.0	90.0	90.0	75.9	90.0	90.0
	6 '- 0 "	90.0	90.0	89.2	69.6	89.2	90.0
9 '- 6 "	3 '- 6 "	90.0	90.0	90.0	90.0	90.0	90.0
	4 '- 0 "	90.0	90.0	90.0	90.0	90.0	90.0
	4 '- 6 "	90.0	90.0	90.0	90.0	90.0	90.0
	5 '- 0 "	90.0	90.0	90.0	81.3	90.0	90.0
	5 '- 6 "	90.0	90.0	90.0	73.9	90.0	90.0
	6 '- 0 "	90.0	90.0	86.8	67.8	86.8	90.0
10 '- 0 "	3 '- 6 "	90.0	90.0	90.0	90.0	90.0	90.0
	4 '- 0 "	90.0	90.0	90.0	90.0	90.0	90.0
	4 '- 6 "	90.0	90.0	90.0	87.7	90.0	90.0
	5 '- 0 "	90.0	90.0	90.0	78.9	90.0	90.0
	5 '- 6 "	90.0	90.0	90.0	71.7	90.0	90.0
	6 '- 0 "	90.0	90.0	84.2	65.7	84.2	90.0
10 '- 6 "	3 '- 6 "	90.0	90.0	90.0	90.0	90.0	90.0
	4 '- 0 "	90.0	90.0	90.0	90.0	90.0	90.0
	4 '- 6 "	90.0	90.0	90.0	84.8	90.0	90.0
	5 '- 0 "	90.0	90.0	90.0	76.4	90.0	90.0
	5 '- 6 "	90.0	90.0	88.9	69.4	88.9	90.0
	6 '- 0 "	90.0	90.0	81.5	63.6	81.5	90.0
11 '- 0 "	3 '- 6 "	90.0	90.0	90.0	90.0	90.0	90.0
	4 '- 0 "	90.0	90.0	90.0	90.0	90.0	90.0
	4 '- 6 "	90.0	90.0	90.0	82.0	90.0	90.0
	5 '- 0 "	90.0	90.0	90.0	73.8	90.0	90.0
	5 '- 6 "	90.0	90.0	86.0	67.1	86.0	90.0
	6 '- 0 "	90.0	90.0	78.8	61.5	78.8	90.0
11 '- 6 "	3 '- 6 "	90.0	90.0	90.0	90.0	90.0	90.0
	4 '- 0 "	90.0	90.0	90.0	89.2	90.0	90.0
	4 '- 6 "	90.0	90.0	90.0	79.3	90.0	90.0
	5 '- 0 "	90.0	90.0	90.0	71.3	90.0	90.0
	5 '- 6 "	90.0	90.0	83.1	64.9	83.1	90.0
	6 '- 0 "	87.8	87.8	76.1	59.5	76.1	90.0
12 '- 0 "	3 '- 6 "	90.0	90.0	90.0	90.0	90.0	90.0
	4 '- 0 "	90.0	90.0	90.0	86.2	90.0	90.0
	4 '- 6 "	90.0	90.0	90.0	76.6	90.0	90.0
	5 '- 0 "	90.0	90.0	88.3	69.0	88.3	90.0
	5 '- 6 "	90.0	90.0	80.3	62.7	80.3	90.0
	6 '- 0 "	84.8	84.8	73.6	57.5	73.6	87.5
12 '- 6 "	3 '- 6 "	90.0	90.0	90.0	90.0	90.0	90.0
	4 '- 0 "	90.0	90.0	90.0	83.3	90.0	90.0
	4 '- 6 "	90.0	90.0	90.0	74.1	90.0	90.0
	5 '- 0 "	90.0	90.0	85.4	66.7	85.4	90.0
	5 '- 6 "	89.4	89.4	77.6	60.6	77.6	90.0
	6 '- 0 "	82.0	82.0	71.1	55.5	71.1	84.6

OPTION #3 : (3) FASTENERS CONNECTION

MAXIMUM MULLION SPAN	EFFECTIVE SPACING	MAXIMUM DESIGN LOAD W (psf)					
		POURED CONCRETE (Min. f'c = 3ksi) SUBSTRATE			GROUT FILLED CONCRETE BLOCK SUBSTRATE		1/4" Min. THK ASTM A-36 STEEL SUBSTRATE
		FASTENER TYPES			FASTENER TYPES		FASTENER
"L" (Ft-in)	"b" (Ft-in)	K	L	M	N	O	P
8 '- 5 "	3 '- 6 "	90.0	90.0	90.0	90.0	90.0	90.0
	4 '- 0 "	90.0	90.0	90.0	90.0	90.0	90.0
	4 '- 6 "	90.0	90.0	90.0	90.0	90.0	90.0
	5 '- 0 "	90.0	90.0	90.0	90.0	90.0	90.0
	5 '- 6 "	90.0	90.0	90.0	90.0	90.0	90.0
	6 '- 0 "	90.0	90.0	90.0	90.0	90.0	90.0
8 '- 6 "	3 '- 6 "	90.0	90.0	90.0	90.0	90.0	90.0
	4 '- 0 "	90.0	90.0	90.0	90.0	90.0	90.0
	4 '- 6 "	90.0	90.0	90.0	90.0	90.0	90.0
	5 '- 0 "	90.0	90.0	90.0	90.0	90.0	90.0
	5 '- 6 "	90.0	90.0	90.0	90.0	90.0	90.0
	6 '- 0 "	90.0	90.0	90.0	90.0	90.0	90.0
9 '- 0 "	3 '- 6 "	90.0	90.0	90.0	90.0	90.0	90.0
	4 '- 0 "	90.0	90.0	90.0	90.0	90.0	90.0
	4 '- 6 "	90.0	90.0	90.0	90.0	90.0	90.0
	5 '- 0 "	90.0	90.0	90.0	90.0	90.0	90.0
	5 '- 6 "	90.0	90.0	90.0	90.0	90.0	90.0
	6 '- 0 "	90.0	90.0	90.0	90.0	90.0	90.0
9 '- 6 "	3 '- 6 "	90.0	90.0	90.0	90.0	90.0	90.0
	4 '- 0 "	90.0	90.0	90.0	90.0	90.0	90.0
	4 '- 6 "	90.0	90.0	90.0	90.0	90.0	90.0
	5 '- 0 "	90.0	90.0	90.0	90.0	90.0	90.0
	5 '- 6 "	90.0	90.0	90.0	90.0	90.0	90.0
	6 '- 0 "	90.0	90.0	90.0	90.0	90.0	90.0
10 '- 0 "	3 '- 6 "	90.0	90.0	90.0	90.0	90.0	90.0
	4 '- 0 "	90.0	90.0	90.0	90.0	90.0	90.0
	4 '- 6 "	90.0	90.0	90.0	90.0	90.0	90.0
	5 '- 0 "	90.0	90.0	90.0	90.0	90.0	90.0
	5 '- 6 "	90.0	90.0	90.0	90.0	90.0	90.0
	6 '- 0 "	90.0	90.0	90.0	90.0	90.0	90.0
10 '- 6 "	3 '- 6 "	90.0	90.0	90.0	90.0	90.0	90.0
	4 '- 0 "	90.0	90.0	90.0	90.0	90.0	90.0
	4 '- 6 "	90.0	90.0	90.0	90.0	90.0	90.0
	5 '- 0 "	90.0	90.0	90.0	90.0	90.0	90.0
	5 '- 6 "	90.0	90.0	90.0	90.0	90.0	90.0
	6 '- 0 "	90.0	90.0	90.0	90.0	90.0	90.0
11 '- 0 "	3 '- 6 "	90.0	90.0	90.0	90.0	90.0	90.0
	4 '- 0 "	90.0	90.0	90.0	90.0	90.0	90.0
	4 '- 6 "	90.0	90.0	90.0	90.0	90.0	90.0
	5 '- 0 "	90.0	90.0	90.0	90.0	90.0	90.0
	5 '- 6 "	90.0	90.0	90.0	90.0	90.0	90.0
	6 '- 0 "	90.0	90.0	90.0	90.0	90.0	90.0
11 '- 6 "	3 '- 6 "	90.0	90.0	90.0	90.0	90.0	90.0
	4 '- 0 "	90.0	90.0	90.0	90.0	90.0	90.0
	4 '- 6 "	90.0	90.0	90.0	90.0	90.0	90.0
	5 '- 0 "	90.0	90.0	90.0	90.0	90.0	90.0
	5 '- 6 "	90.0	90.0	90.0	90.0	90.0	90.0
	6 '- 0 "	90.0	90.0	90.0	89.2	90.0	90.0
12 '- 0 "	3 '- 6 "	90.0	90.0	90.0	90.0	90.0	90.0
	4 '- 0 "	90.0	90.0	90.0	90.0	90.0	90.0
	4 '- 6 "	90.0	90.0	90.0	90.0	90.0	90.0
	5 '- 0 "	90.0	90.0	90.0	90.0	90.0	90.0
	5 '- 6 "	90.0	90.0	90.0	90.0	90.0	90.0
	6 '- 0 "	90.0	90.0	90.0	86.2	90.0	90.0
12 '- 6 "	3 '- 6 "	90.0	90.0	90.0	90.0	90.0	90.0
	4 '- 0 "	90.0	90.0	90.0	90.0	90.0	90.0
	4 '- 6 "	90.0	90.0	90.0	90.0	90.0	90.0
	5 '- 0 "	90.0	90.0	90.0	90.0	90.0	90.0
	5 '- 6 "	90.0	90.0	90.0	90.0	90.0	90.0
	6 '- 0 "	90.0	90.0	90.0	83.3	90.0	90.0

OPTION # 1 (ELEVATION)
(1) FASTENER CONNECTION

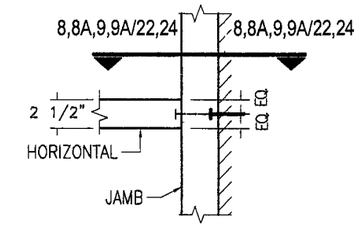

OPTION # 2 (ELEVATION)
(2) FASTENERS CONNECTION

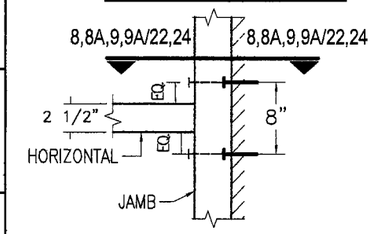

OPTION # 3 (ELEVATION)
(3) FASTENERS CONNECTION

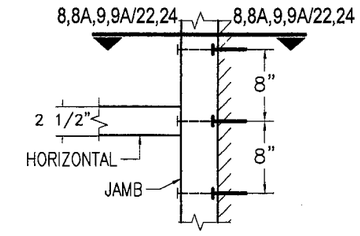

FASTENER TYPES:

K - 1/2"Ø HILTI KWIK BOLT TZ ANCHOR W/ 2" Min. EMBEDMENT INTO POURED CONCRETE (Min. f'c = 3 ksi) BEYOND ANY FINISH MATERIAL, W/ 4" MIN. EDGE DISTANCE.

L - 1/2"Ø HILTI KWIK BOLT 3 ANCHOR W/ 3 1/2" Min. EMBEDMENT INTO POURED CONCRETE (Min. f'c = 3 ksi) BEYOND ANY FINISH MATERIAL, W/ 4" MIN. EDGE DISTANCE.

M - 1/2"Ø HILTI HUS-H SCREW ANCHOR W/ 3" Min. EMBEDMENT INTO POURED CONCRETE (Min. f'c = 3 ksi) BEYOND ANY FINISH MATERIAL, W/ 4" MIN. EDGE DISTANCE.

N - 1/2"Ø HILTI KWIK BOLT 3 ANCHOR W/ 3 1/2" Min. EMBEDMENT INTO GROUT FILLED CONCRETE BLOCK BEYOND ANY FINISH MATERIAL, W/ 4" MIN. EDGE DISTANCE.

O - 1/2"Ø HILTI HUS-H SCREW ANCHOR W/ 3" Min. EMBEDMENT INTO GROUT FILLED CONCRETE BLOCK BEYOND ANY FINISH MATERIAL, W/ 4" MIN. EDGE DISTANCE.

P - 1/2"Ø-13 TYPE "F" GRADE 5 BOLT TO 1/2" MIN. THK. ASTM A-36 STEEL W/ 1" MIN. EDGE DISTANCE OR 1/2"Ø -13 SAE GALVANIZED STEEL GRADE 5 HHB THRU BOLT W/ NUT & LOCK WASHER TO 1/4" MIN. THK. ASTM A-36 STEEL W/ 1" MIN. EDGE DISTANCE.

FLORIDA BUILDING CODE (High Velocity Hurricane Zone)

HR-251 CAPTURED CURTAIN WALL SYSTEM
SMALL MISSILE IMPACT INSULATED GLASS

DRAWN BY L.G. | 05/06/09 DATE | 09-070 DRAWING No | SHEET 17 OF 36

Oldcastle Glass®
Engineered Products
803 AIRPORT RD. TERRELL TX 75160
PHONE: (972) 551-6100

REV. No	DESCRIPTION	DATE
1		
2		
3		
4		

© 2009 TILTECO INC.

TILTECO INC.
TILLIT TESTING & ENGINEERING COMPANY
8351 N.W. 36th. St., Ste. 305, VIRGINIA GARDENS, FLORIDA 33166
Phone : (305)871-1530 . Fax : (305)871-1531
e-mail: tilteco@aol.com
EB-0006719
WALTER A. TILLIT Jr., P.E.
FLORIDA Lic. # 44167

WALTER A. TILLIT JR. LICENSE NO. 44167 STATE OF FLORIDA PROFESSIONAL ENGINEER

MIAMI-DADE STAMP

Approved as complying with the Florida Building Code
Date MARCH 24, 2010
Notice of Acceptance No. 09-0721.01
Miami-Dade Product Control

HEAD CONNECTION DETAILS (SIDE VIEWS)

SINGLE SPAN

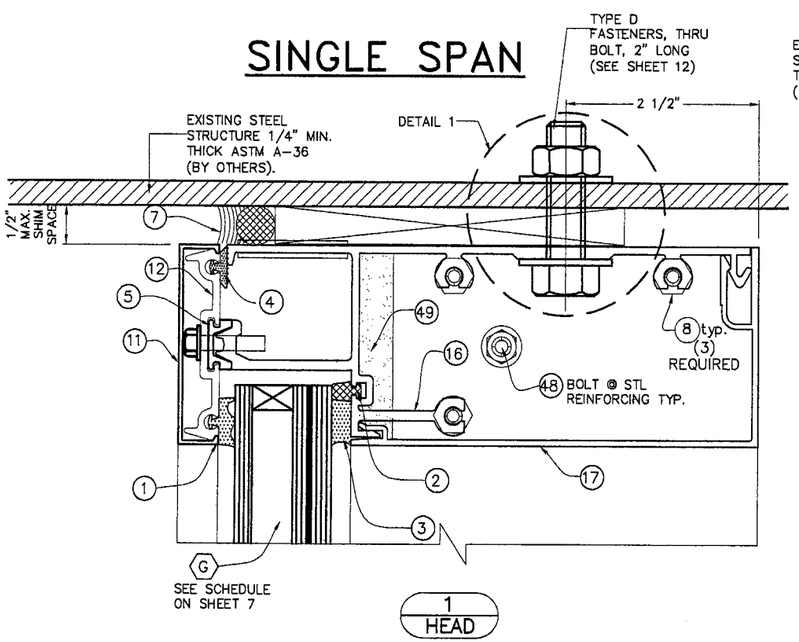

1
HEAD

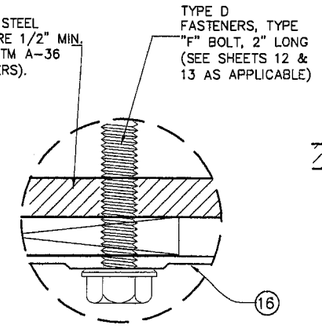

ALTERNATE FASTENER DETAIL 1

TWIN SPAN

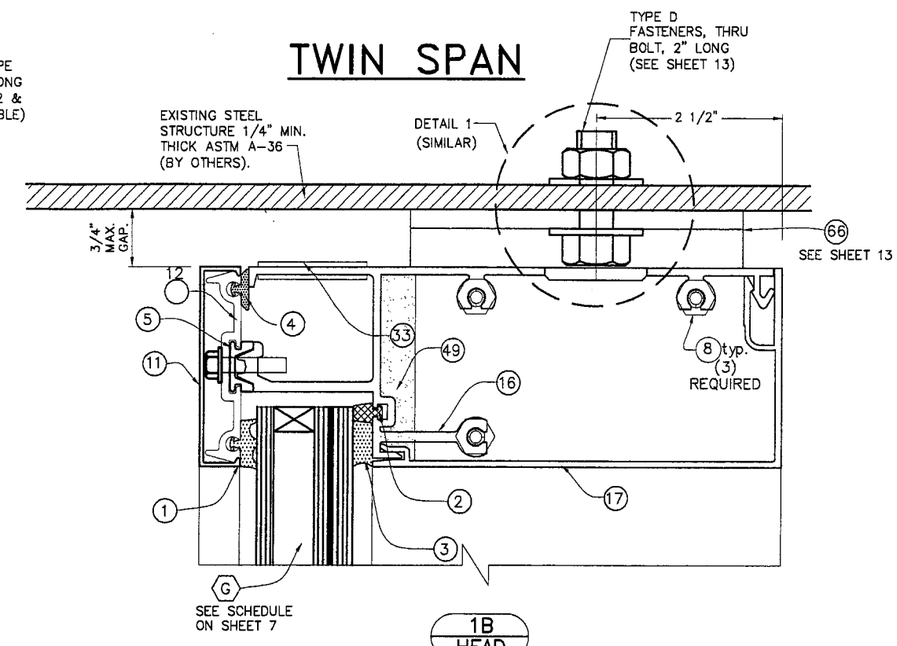

1B
HEAD

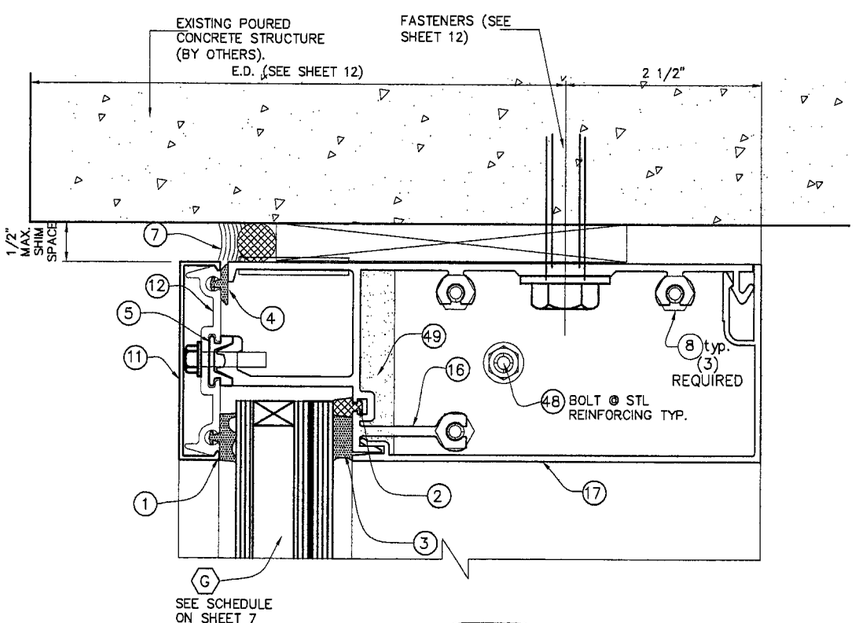

1A
HEAD

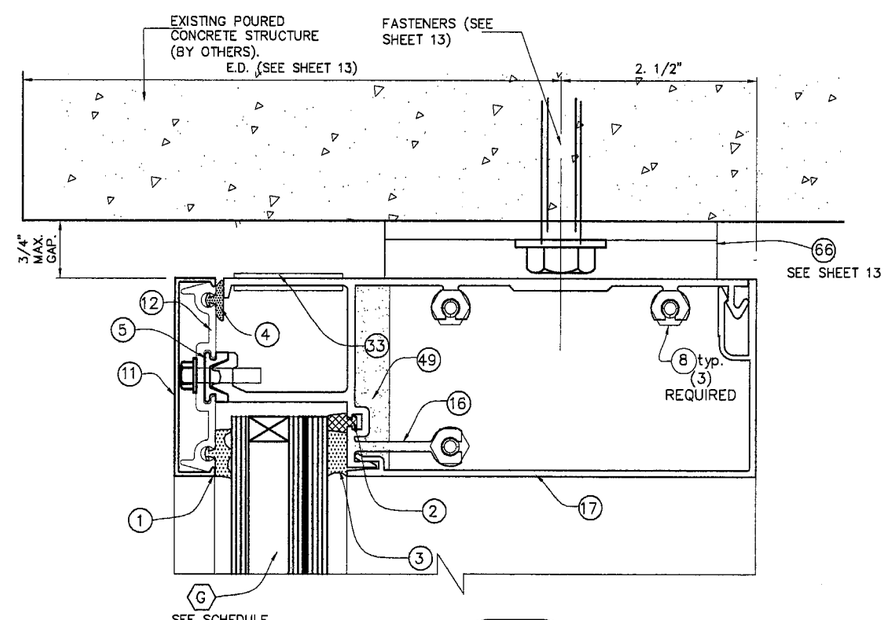

1C
HEAD

NOTE: SEE ALSO DETAILS 1, 2, 3 & 4, & 18 ON SHEETS 25 & 28 RESPECTIVELY

FLORIDA BUILDING CODE (High Velocity Hurricane Zone)

DRAWN BY R.E./M.C.V./L.G.
05/06/09 DATE
09-070 DRAWING No
SHEET 18 OF 36

HR-251 CAPTURED CURTAIN WALL SYSTEM
SMALL MISSILE IMPACT INSULATED GLASS

Oldcastle Glass®
Engineered Products
803 AIRPORT RD. TERRELL TX 75160
PHONE: (972) 551-6100

REV. No	DESCRIPTION	DATE	REV. No	DESCRIPTION	DATE
1			3		
2			4		

© 2009 TILTECO INC.

TILTECO INC.
TILLIT TESTING & ENGINEERING COMPANY
16355 N.W. 36th. St., Ste. 305, VIRGINIA GARDENS, FLORIDA 33166
Phone : (305)871-1530 . Fax : (305)871-1531
e-mail: tilteco@aol.com
EB-0006719
WALTER A. TILLIT Jr., P.E.
FLORIDA Lic. # 44167

WALTER A. TILLIT JR. LICENSE No. 44167 STATE OF FLORIDA PROFESSIONAL ENGINEER

MIAMI-DADE STAMP

Approved as complying with the Florida Building Code
Date MARCH 24, 2010
NOAC 09-0721.04
Miami-Dade Product Control

HORIZONTAL CONNECTION DETAILS (SIDE VIEWS)

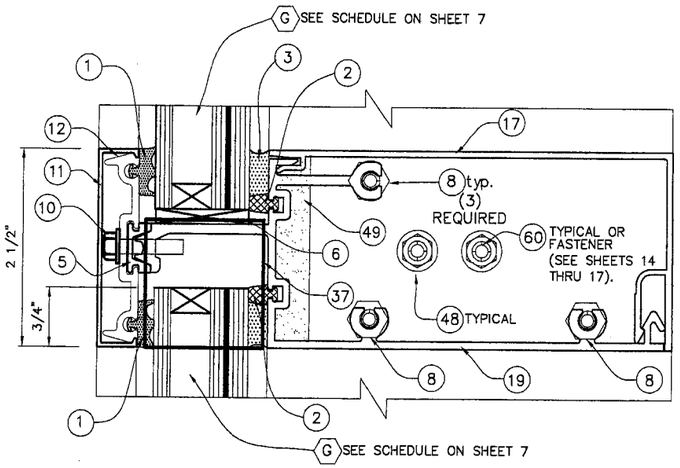

2
INT HORI

AT SINGLE OR TWIN SPAN

MAXIMUM DESIGN LOAD FOR A GIVEN D.L.O., VALID FOR HORIZONTAL

D.L.O. (INCH)	MAX. DESIGN LOAD (p.s.f.)
74.0	90.0
69.5	90.0
63.5	90.0
57.5	90.0

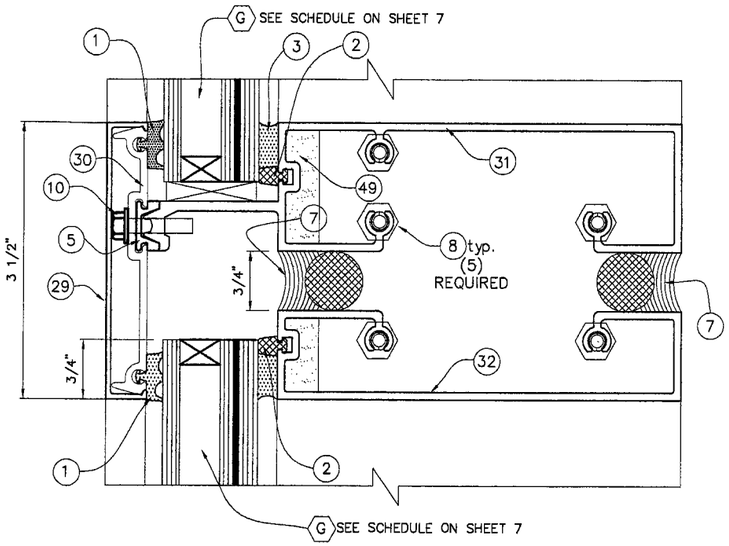

2A
INT HORI

AT TWIN SPAN ONLY
(EXPANSION HORIZONTALS)

MAXIMUM DESIGN LOAD FOR A GIVEN D.L.O., VALID FOR HORIZONTAL EXPANSION

D.L.O. (INCH)	MAX. DESIGN LOAD (p.s.f.)
74.0	53.5
69.5	71.0
63.5	90.0
57.5	90.0

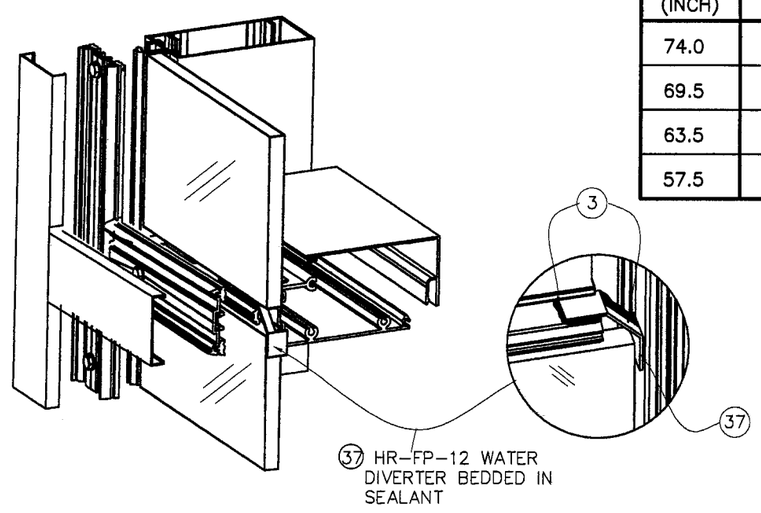

FLORIDA BUILDING CODE (High Velocity Hurricane Zone)

HR-251 CAPTURED CURTAIN WALL SYSTEM
SMALL MISSILE IMPACT INSULATED GLASS

DRAWN BY F.P./M.C.V./L.G.
05/06/09 DATE
09-070 DRAWING No
SHEET 19 OF 36

Oldcastle Glass®
Engineered Products
803 AIRPORT RD. TERRELL TX 75160
PHONE: (972) 551-6100

REV. No	DESCRIPTION	DATE	REV. No	DESCRIPTION	DATE
1	GENERAL	10/8/09	3		
2			4		

© 2009 TILTECO INC.

TILTECO INC.
TILLIT TESTING & ENGINEERING COMPANY
6800 N.W. 36th. St. Ste. 305, VIRGINIA GARDENS, FLORIDA 33166
Phone : (305)871-1530 . Fax : (305)871-1531
e-mail: tilteco@aol.com
EB-0006719
WALTER A. TILLIT Jr., P.E.
FLORIDA Lic. # 44167

WALTER A. TILLIT JR. LICENSE No. 44167 STATE OF FLORIDA PROFESSIONAL ENGINEER

MIAMI-DADE STAMP

Approved as complying with the Florida Building Code
Date 11/24/2010
NOA # 09-0717.04
Miami-Dade Product Control
Division
By

SILL CONNECTION DETAILS (SIDE VIEWS)

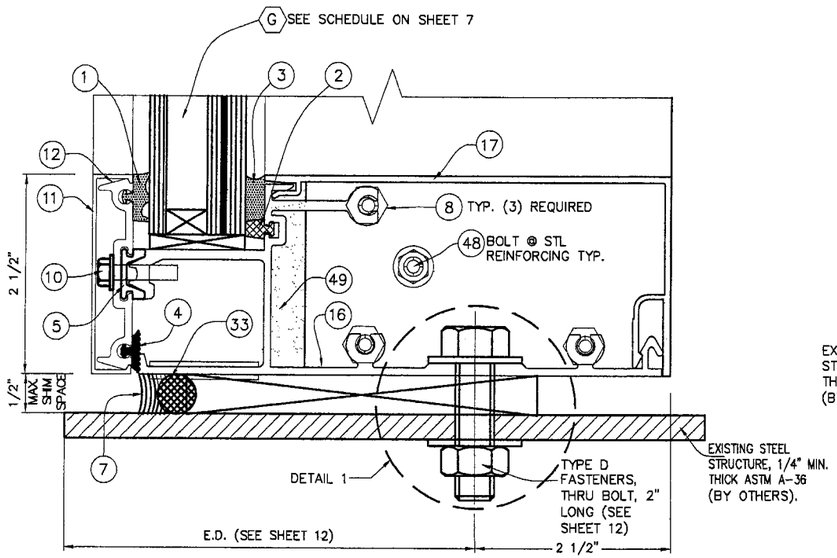

3
SILL

CONNECTION TO STEEL STRUCTURE

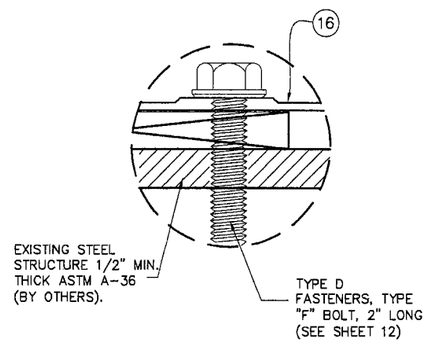

ALTERNATE FASTENER DETAIL 1

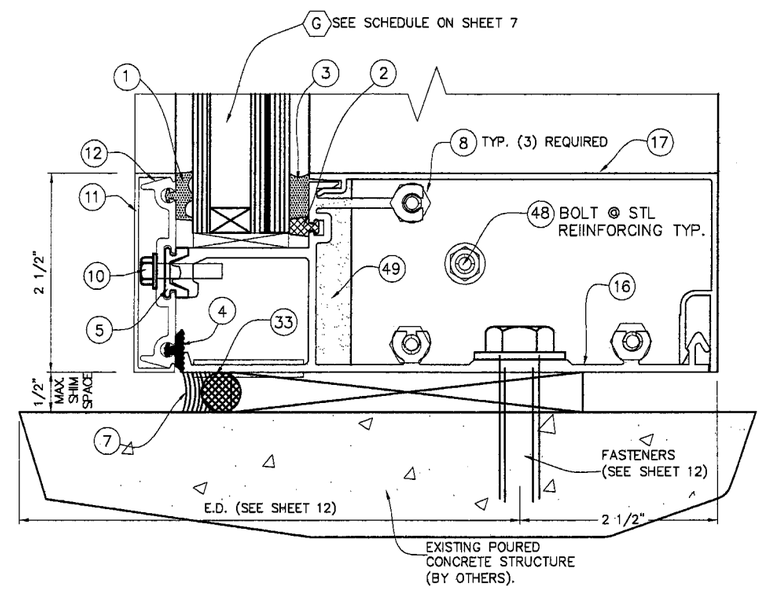

3
SILL

CONNECTION TO POURED CONCRETE STRUCTURE

NOTE: SEE ALSO DETAILS 1 THRU 4 ON SHEET 25

FLORIDA BUILDING CODE (High Velocity Hurricane Zone)

HR-251 CAPTURED CURTAIN WALL SYSTEM
SMALL MISSILE IMPACT INSULATED GLASS

Oldcastle Glass®
Engineered Products
803 AIRPORT RD. TERRELL TX 75160
PHONE: (972) 551-6100

REV. No	DESCRIPTION	DATE	REV. No	DESCRIPTION	DATE
1			3		
2			4		

DRAWN BY F.P./M.C.V./L.G.
05/06/09 DATE
09-070 DRAWING No
SHEET 20 OF 36

© 2009 TILTECO INC.

TILTECO INC.
TILLIT TESTING & ENGINEERING COMPANY
803 N.W. 36th. St., Ste. 305, VIRGINIA GARDENS, FLORIDA 33166
Phone : (305)871-1530 . Fax : (305)871-1531
e-mail: tilteco@aol.com
EB-0006719
WALTER A. TILLIT Jr., P.E.
FLORIDA Lic. # 44167

WALTER A. TILLIT JR.
LICENSE
No. 44167
STATE OF FLORIDA
PROFESSIONAL ENGINEER

MIAMI-DADE STAMP

Approved as noted on plans
Date: 11/24/2010
09-0121.04
By: Manuel Perez

STANDARD MULLION DETAILS (PLAN)

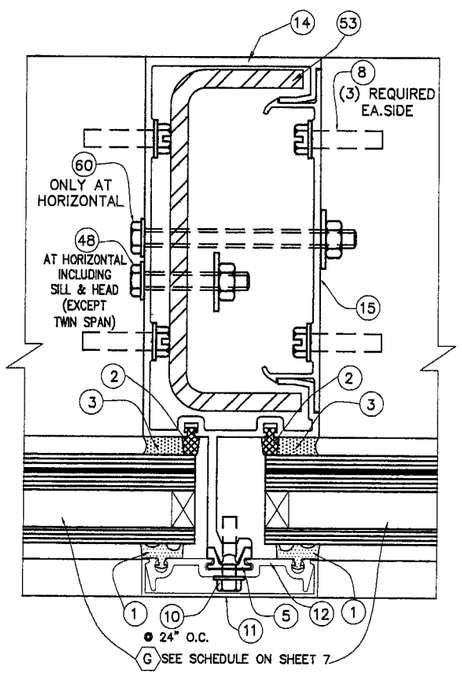

4
LIGHT MULLION W/STL

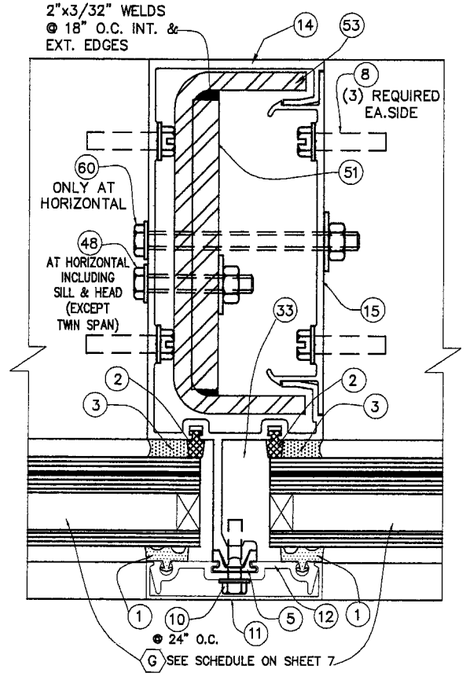

4A
LIGHT MULLION W/STL

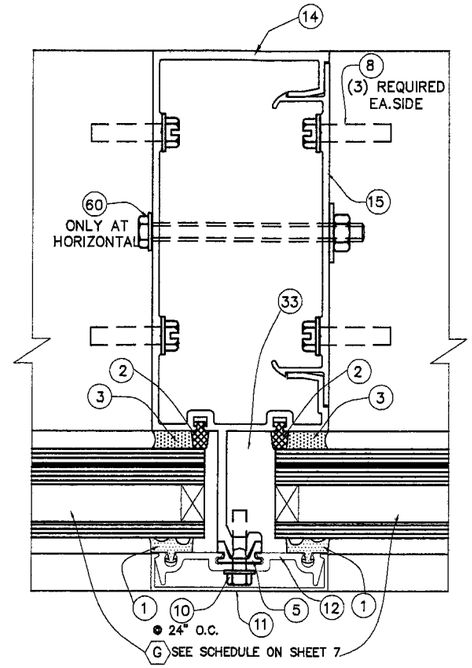

5
LIGHT MULLION W/STL

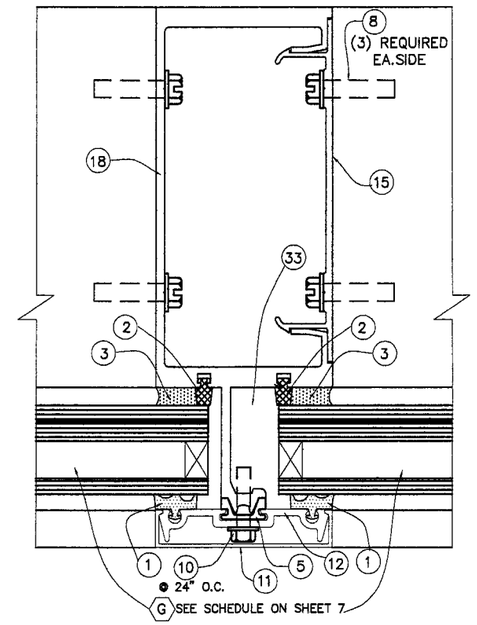

11
HEAVY MULLION

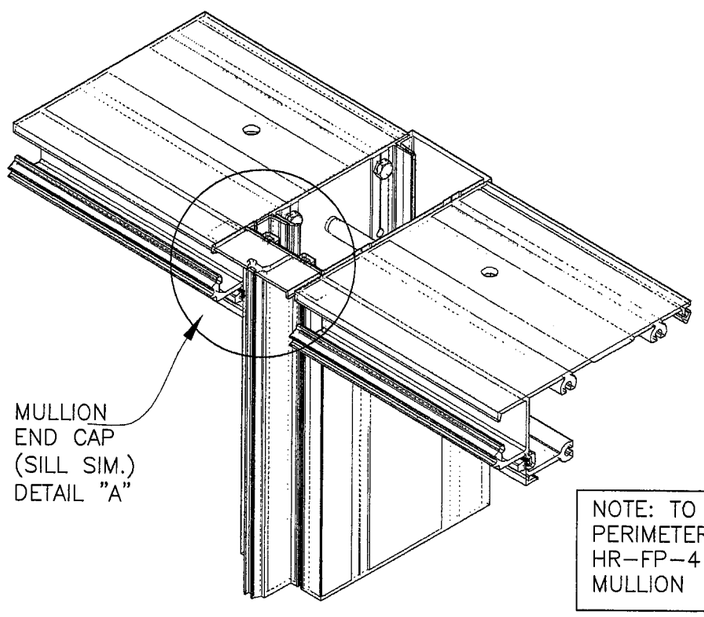

NOTE: TO ASSURE PROPER PERIMETER SEAL AT HEAD USE HR-FP-4 TO BRIDGE ACROSS MULLION

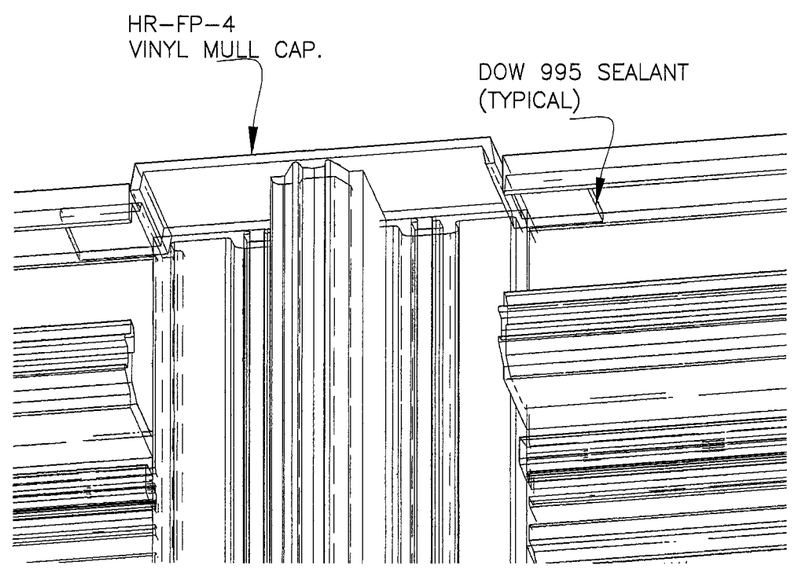

DETAIL "A"

FLORIDA BUILDING CODE (High Velocity Hurricane Zone)

HR-251 CAPTURED CURTAIN WALL SYSTEM
SMALL MISSILE IMPACT INSULATED GLASS

Oldcastle Glass®
Engineered Products
803 AIRPORT RD. TERRELL TX 75160
PHONE: (972) 551-6100

REV. No	DESCRIPTION	DATE
1	GENERAL	10/9/09
2		
3		
4		

DRAWN BY	DATE	DRAWING No	SHEET
F.P./M.C.V./I.A.	05/06/09	09-070	21 OF 36

© 2009 TILTECO INC.

TILTECO INC.
TILLIT TESTING & ENGINEERING COMPANY
8300 36th. St. Ste. 305, VIRGINIA GARDENS, FLORIDA 33166
Phone : (305)871-1530 . Fax : (305)871-1531
e-mail: tilteco@aol.com
EB-0006719
WALTER A. TILLIT Jr., P.E.
FLORIDA Lic. # 44167

WALTER A. TILLIT JR.
LICENSE NO. 44167
STATE OF FLORIDA
PROFESSIONAL ENGINEER

MIAMI-DADE STAMP

Approved as complies with the Florida Building Code
MARCH 24, 2010
09-0721.04
Miami-Dade Product Control

JAMB CONNECTIONS AT HORIZONTALS (PLAN)

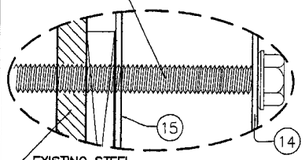

ALTERNATE FASTENER DETAIL 1

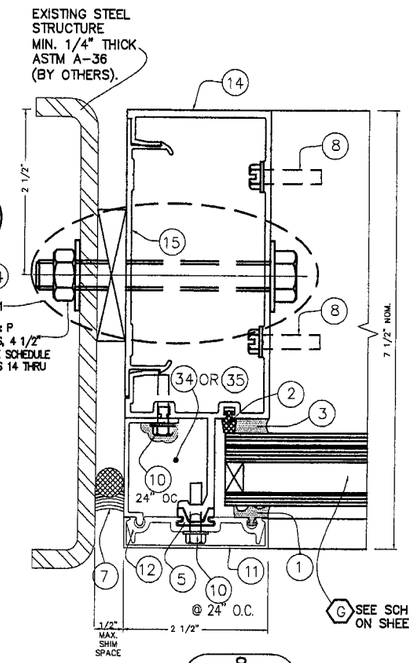

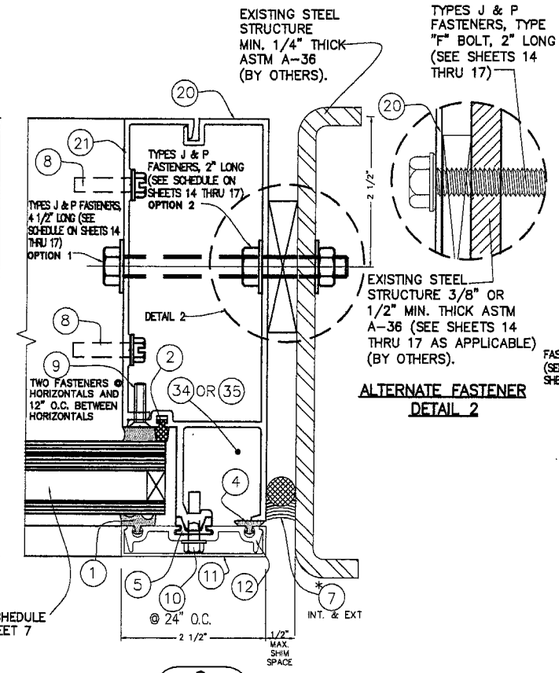

ALTERNATE FASTENER DETAIL 2

TO STEEL STRUCTURE

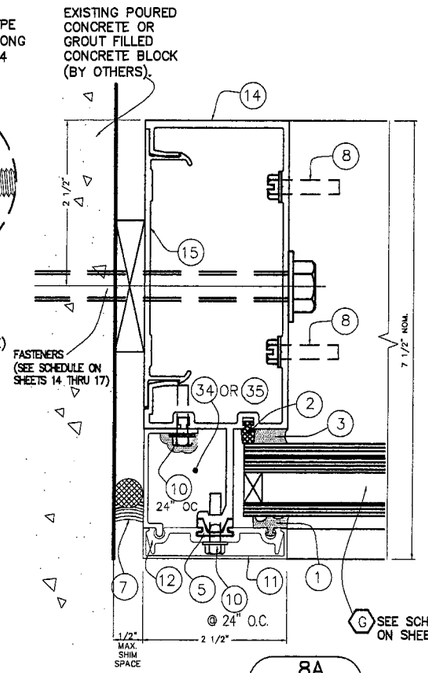

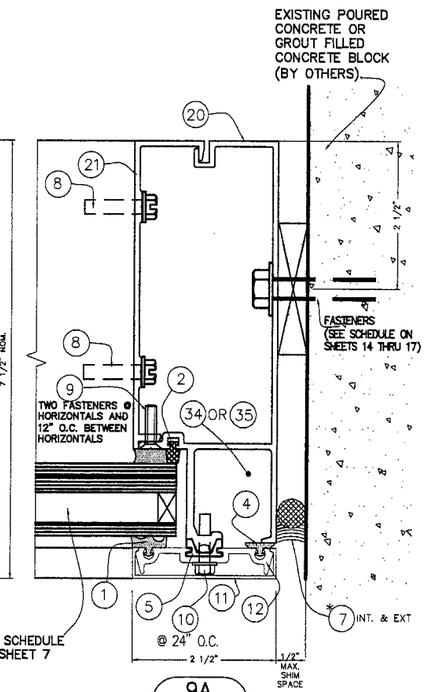

TO POURED CONCRETE OR GROUT FILLED CONCRETE BLOCK

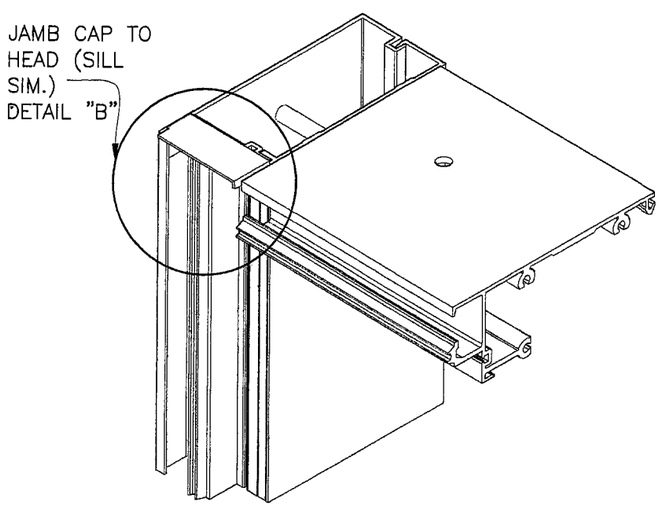

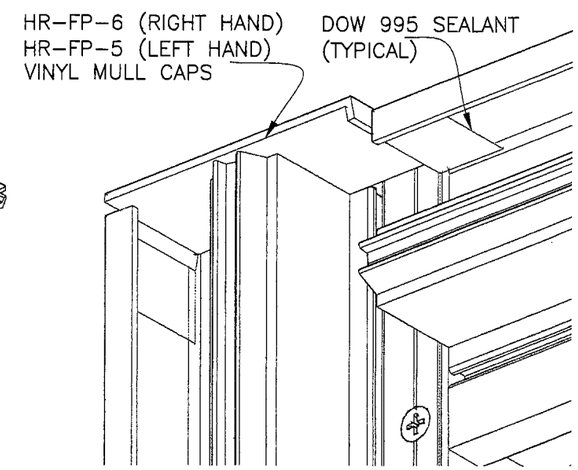

DETAIL "B"

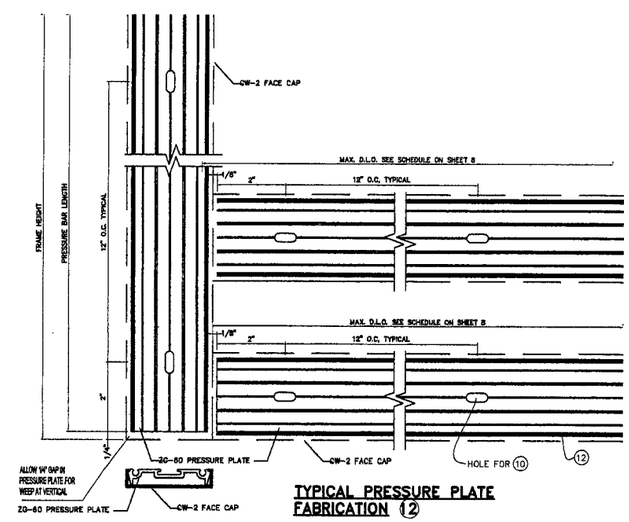

TYPICAL PRESSURE PLATE FABRICATION 12

FLORIDA BUILDING CODE (High Velocity Hurricane Zone)

HR-251 CAPTURED CURTAIN WALL SYSTEM
SMALL MISSILE IMPACT INSULATED GLASS

DRAWN BY

05/06/09 DATE

09-070 DRAWING No

SHEET 22 OF 36

Oldcastle Glass®
Engineered Products
803 AIRPORT RD. TERRELL TX 75160
PHONE: (972) 551-6100

REV. No	DESCRIPTION	DATE
1	GENERAL	10/9/09
2		
3		
4		

REV. No	DESCRIPTION	DATE

© 2009 TILTECO INC.

TILTECO INC.
TILLIT TESTING & ENGINEERING COMPANY
8355 N.W. 36th. St., Ste. 305, VIRGINIA GARDENS, FLORIDA 33166
Phone : (305)871-1530 . Fax : (305)871-1531
e-mail: tilteco@aol.com
EB-0006719
WALTER A. TILLIT Jr., P.E.
FLORIDA Lic. # 44167

WALTER A. TILLIT JR. LICENSE No. 44167 STATE OF FLORIDA PROFESSIONAL ENGINEER

MIAMI-DADE STAMP

Approved as complying with the Florida Building Code
Date: 04-07-2010
Miami-Dade Product Control

CORNER MULLION DETAILS (PLAN)

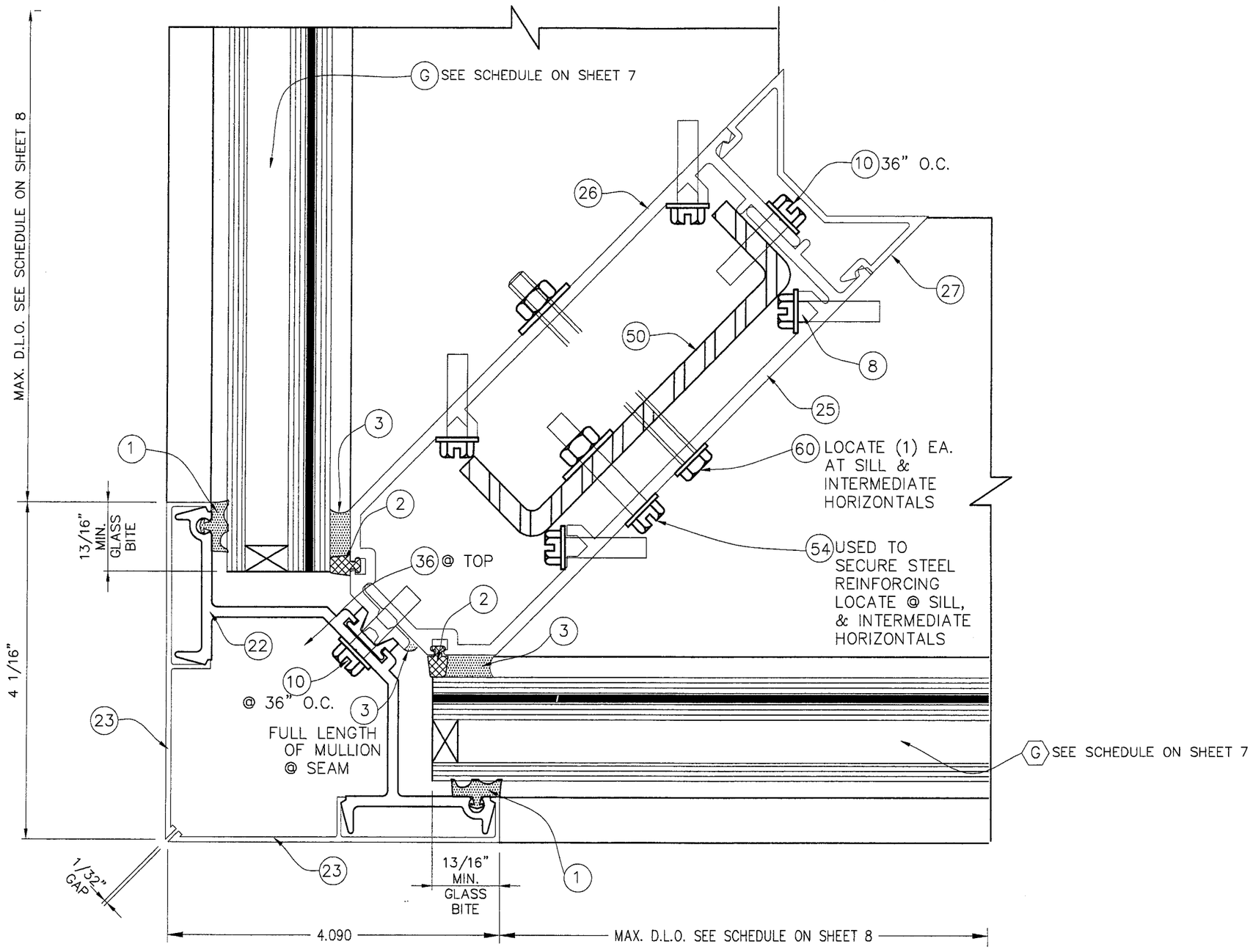

14
90 DEG CORNER CAPTURED PLAN

FLORIDA BUILDING CODE (High Velocity Hurricane Zone)

DRAWN BY F.P./M.C.V.

05/06/09 DATE

09-070 DRAWING No

SHEET 23 OF 36

HR-251 CAPTURED CURTAIN WALL SYSTEM
SMALL MISSILE IMPACT INSULATED GLASS

Oldcastle Glass®
Engineered Products
803 AIRPORT RD. TERRELL TX 75160
PHONE: (972) 551-6100

REV. No	DESCRIPTION	DATE	REV. No	DESCRIPTION	DATE
1			3		
2			4		

© 2009 TILTECO INC.

TILTECO INC.
TILLIT TESTING & ENGINEERING COMPANY
6351 N.W. 36th. St., Ste. 305, VIRGINIA GARDENS, FLORIDA 33166
Phone : (305)871-1530 . Fax : (305)871-1531
e-mail: tilteco@aol.com
EB-0006719
WALTER A. TILLIT Jr., P.E.
FLORIDA Lic. # 44167

WALTER A. TILLIT JR. LICENSE No. 44167 STATE OF FLORIDA PROFESSIONAL ENGINEER

MIAMI-DADE STAMP

Approved as complying with the Florida Building Code
Date MARCH 24, 2010
NOA# 09-1124.04
Miami-Dade Product Control
By

JAMBS CONNECTIONS AT INSIDE CORNER (PLAN)

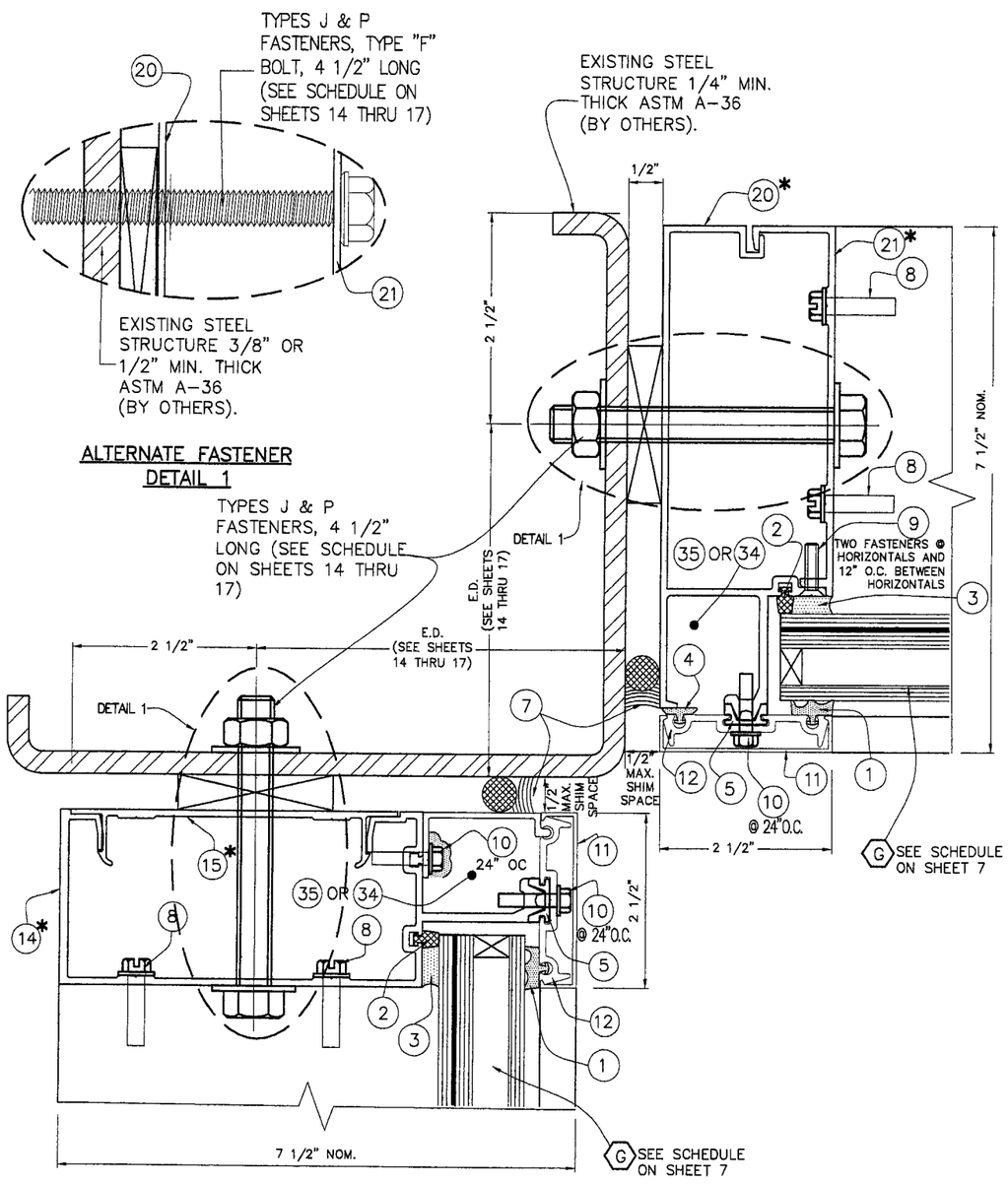

8, 9 @ INSIDE CORNER
JAMB TO EXISTING STEEL (PLAN)

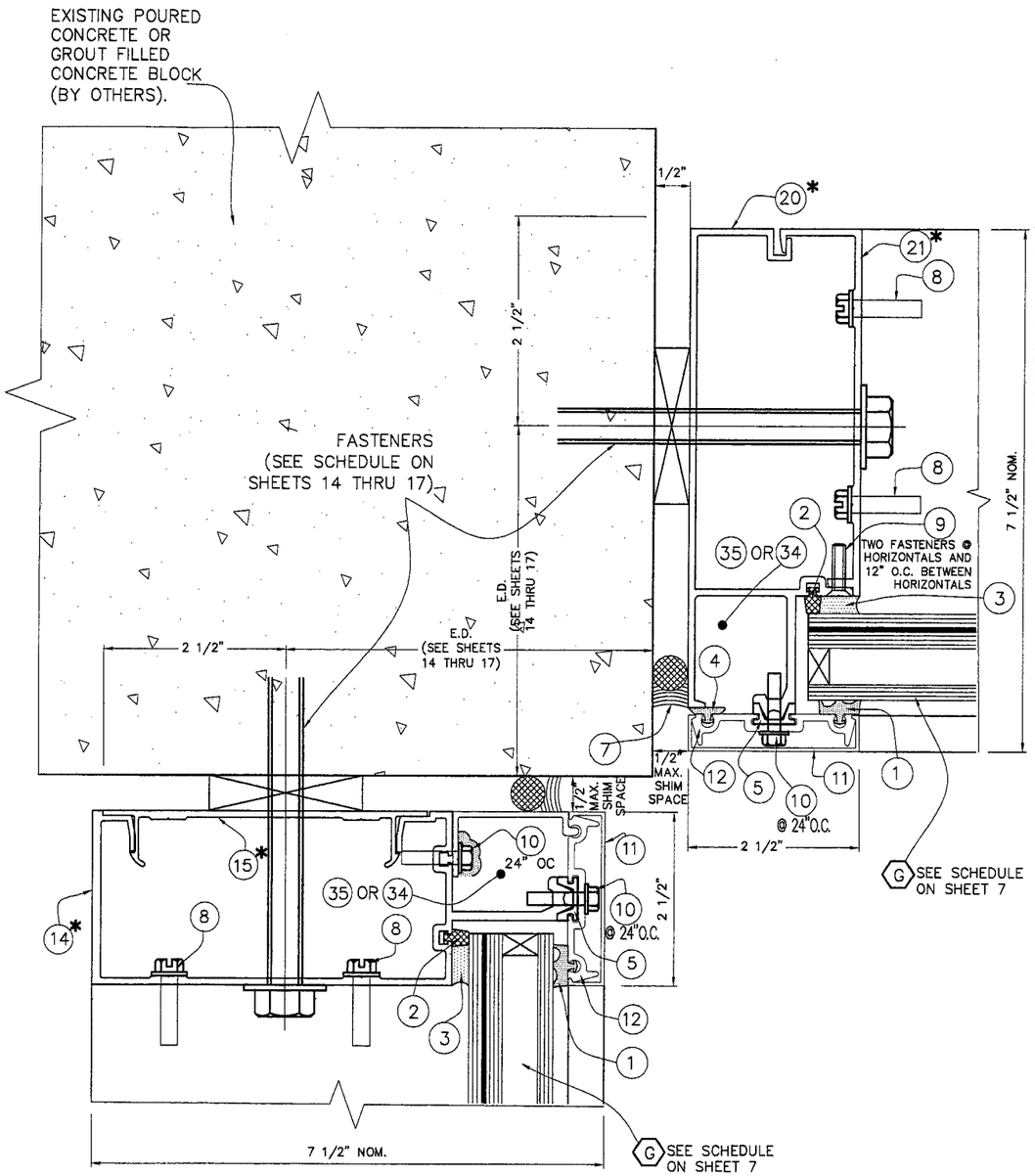

8A, 9A @ INSIDE CORNER
JAMB TO POURED CONCRETE (PLAN)

* JAMBS MAY BE (14) + (15) OR (20) + (21) INTERCHANGABLE

FLORIDA BUILDING CODE (High Velocity Hurricane Zone)

DRAWN BY M.C.V./F.P. | 05/06/09 DATE | 09-070 DRAWING No | SHEET 24 OF 36

HR-251 CAPTURED CURTAIN WALL SYSTEM
SMALL MISSILE IMPACT INSULATED GLASS

Oldcastle Glass®
Engineered Products
803 AIRPORT RD. TERRELL TX 75160
PHONE: (972) 551-6100

REV. No	DESCRIPTION	DATE	REV. No	DESCRIPTION	DATE
1			3		
2			4		

© 2009 TILTECO INC.

TILTECO INC.
TILLIT TESTING & ENGINEERING COMPANY
N.W. 36th. St., Ste. 305, VIRGINIA GARDENS, FLORIDA 33166
Phone : (305)871-1530 . Fax : (305)871-1531
e-mail: tilteco@aol.com
EB-0006719
WALTER A. TILLIT Jr., P.E.
FLORIDA Lic. # 44167

WALTER A. TILLIT JR. LICENSE No. 44167 STATE OF FLORIDA PROFESSIONAL ENGINEER

MIAMI-DADE STAMP

Approved as complying with the Florida Building Code
MARCH 24, 2010
09-0721.04
Miami-Dade Product Control

SILL & HEAD CONNECTION DETAILS FOR SINGLE SPAN & SILL CONNECTION DETAIL FOR TWIN SPAN (PLANS)

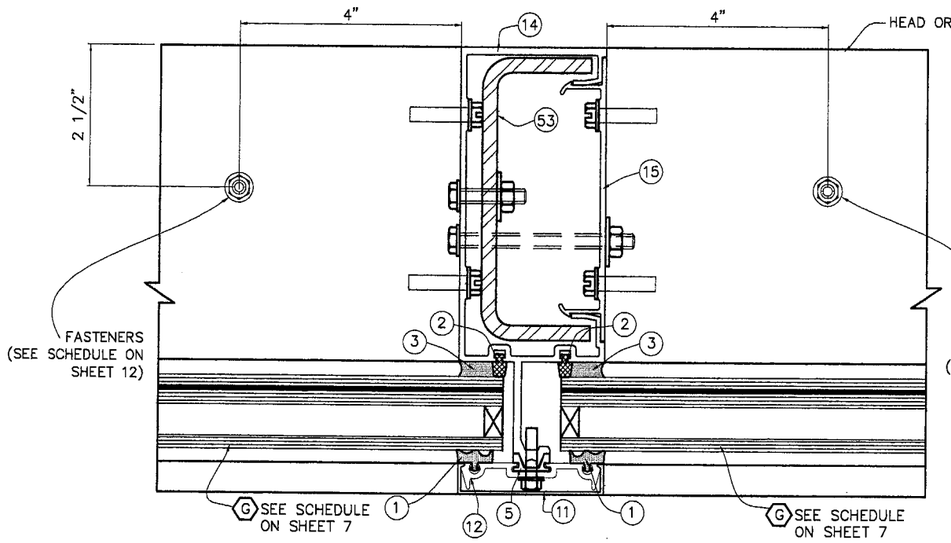

1
CONNECTION AT INTERIOR MULLION

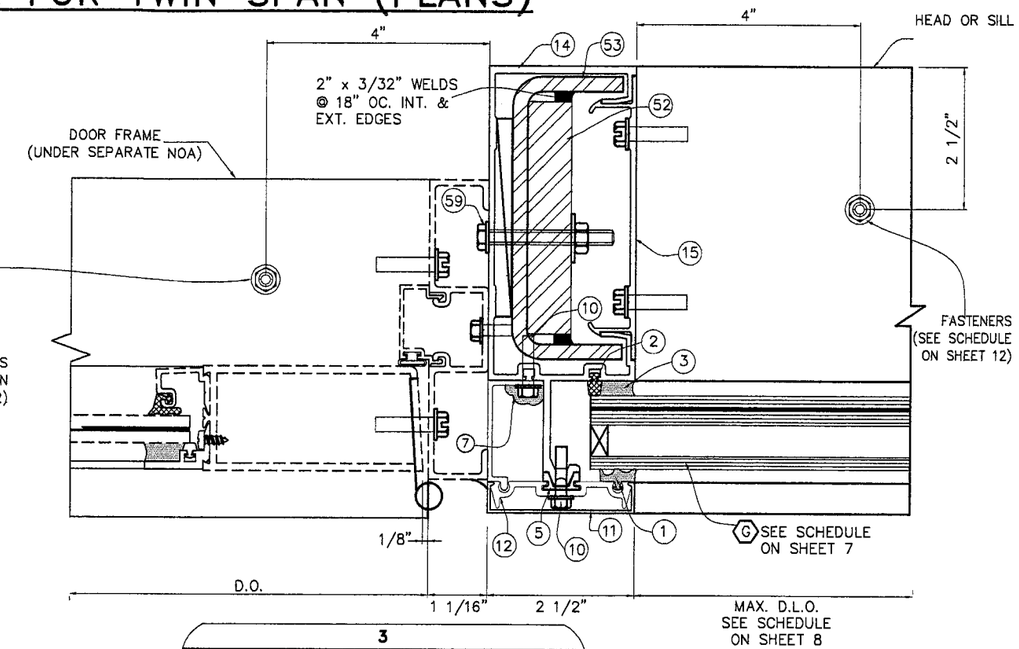

3
CONNECTION AT INTERIOR MULLION AT DOOR

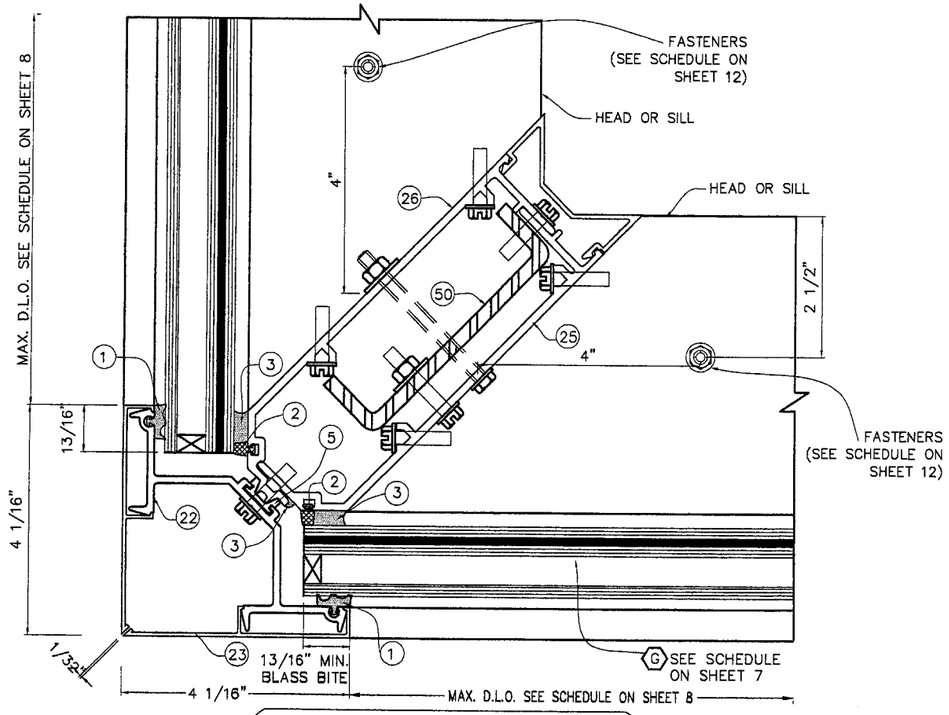

2
CONNECTION AT CORNER MULLION

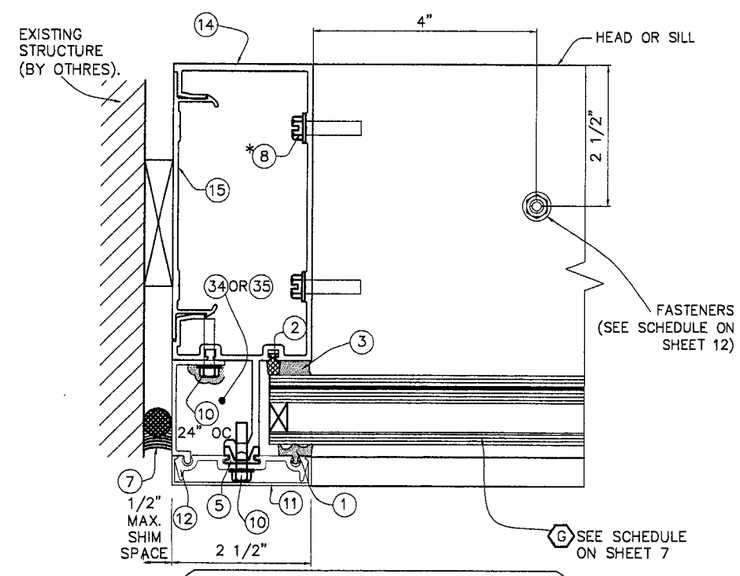

4
CONNECTION AT JAMBS

FLORIDA BUILDING CODE (High Velocity Hurricane Zone)

HR-251 CAPTURED CURTAIN WALL SYSTEM
SMALL MISSILE IMPACT INSULATED GLASS

Oldcastle Glass®
Engineered Products
803 AIRPORT RD. TERRELL TX 75160
PHONE: (972) 551-6100

REV. No	DESCRIPTION	DATE
1	GENERAL	10/28/09
2		
3		
4		

DRAWN BY F.P.
05/06/09 DATE
09-070 DRAWING No
SHEET 25 OF 36

© 2009 TILTECO INC.

TILTECO INC.
TILLIT TESTING & ENGINEERING COMPANY
6355 N.W. 36th. St., Ste. 305, VIRGINA GARDENS, FLORIDA 33166
Phone : (305)871-1530 . Fax : (305)871-1531
e-mail: tilteco@aol.com
EB-0006719
WALTER A. TILLIT Jr., P.E.
FLORIDA Lic. # 41167

P.E. STAMP

3/3/10

MIAMI-DADE STAMP

Approved as complying with the Florida Building Code
Date: MARCH 24, 2010
NOA# 09-0721.04
Miami Dade Product Control
By

OPTION #1 FOR HEAD CONNECTION OF TWIN SPAN STANDARD MULLIONS

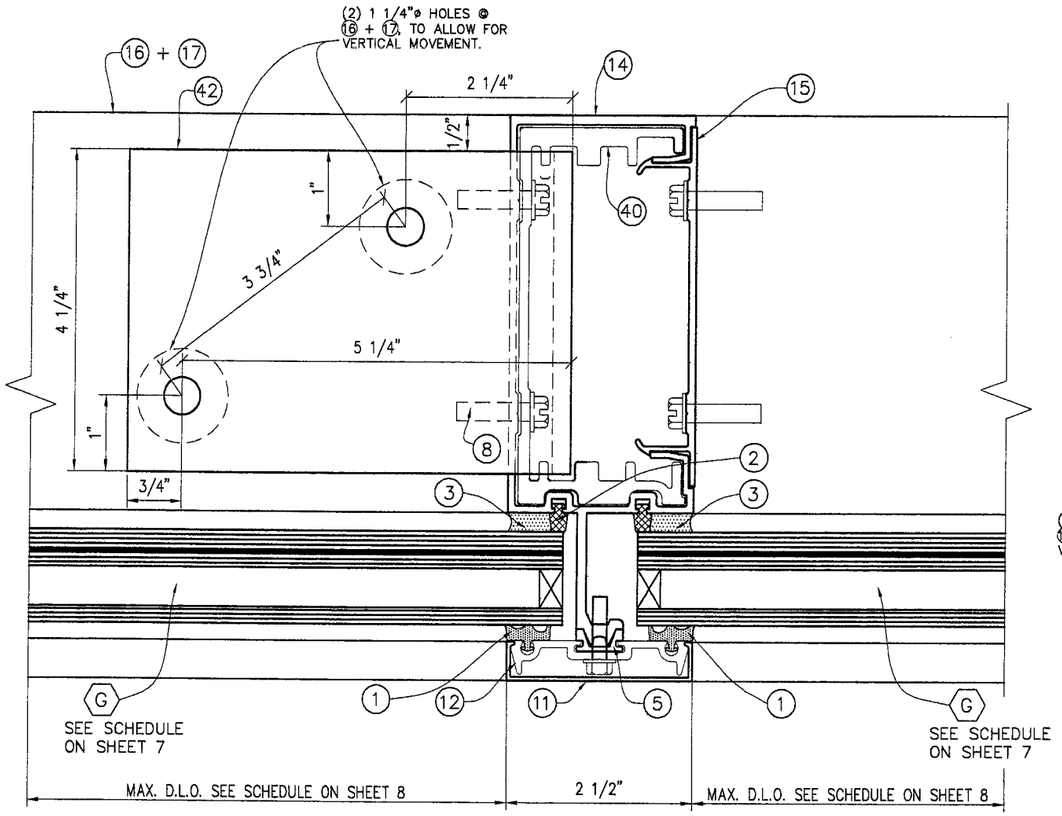

1

17
HEAD ANCHOR (PLAN)

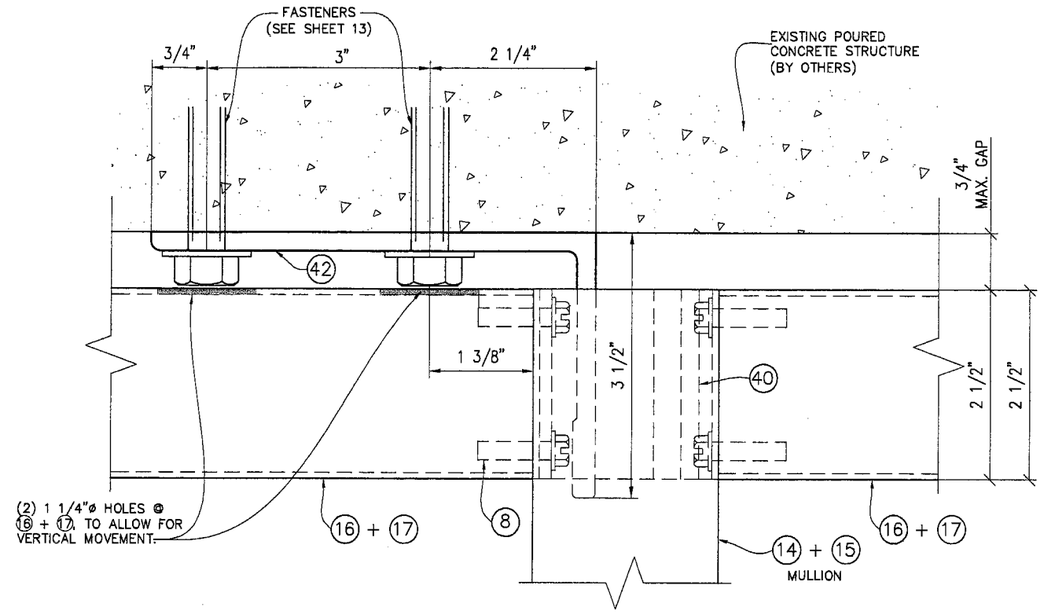

TO EXISTING POURED CONCRETE STRUCTURE

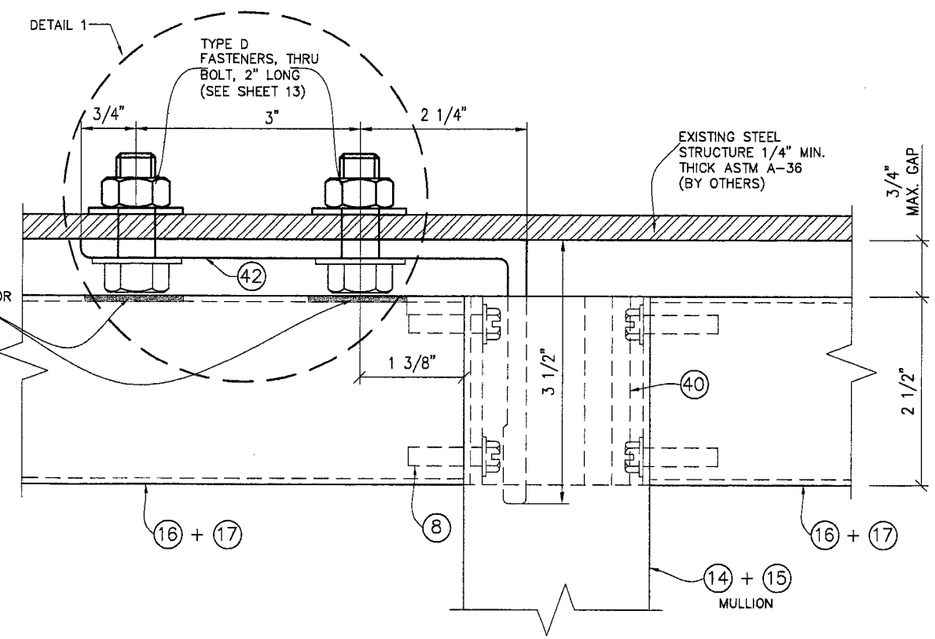

TO EXISTING STEEL STRUCTURE

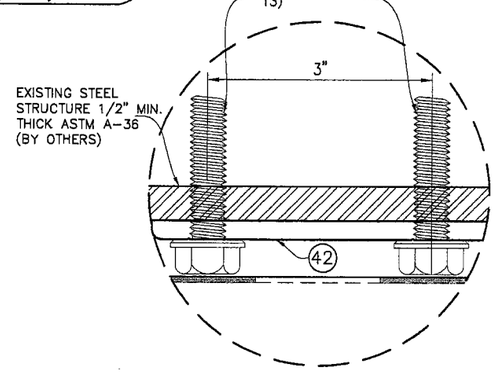

ALTERNATE FASTENER DETAIL 1

EXTERIOR ELEVATIONS 1

FLORIDA BUILDING CODE (High Velocity Hurricane Zone)

HR-251 CAPTURED CURTAIN WALL SYSTEM
SMALL MISSILE IMPACT INSULATED GLASS

Oldcastle Glass®
Engineered Products
803 AIRPORT RD. TERRELL TX 75160
PHONE: (972) 551-6100

REV. No	DESCRIPTION	DATE
1	GENERAL	11/11/09
2		
3		
4		

DRAWN BY	DATE	DRAWING No	SHEET
R.E./M.C.V.	05/06/09	09-070	26 OF 36

© 2009 TILTECO INC.

TILTECO INC.
TILLIT TESTING & ENGINEERING COMPANY
Phone : (305)871-1530 . Fax : (305)871-1531
e-mail: tilteco@aol.com
EB-0006719
WALTER A. TILLIT Jr., P.E.
FLORIDA Lic. # 44167

WALTER A. TILLIT JR. LICENSE No. 44167 STATE OF FLORIDA PROFESSIONAL ENGINEER

MIAMI-DADE STAMP

Approved as complying with the Florida Building Code
Date MARCH 24 2010
NOA# 09-0722.04
Miami-Dade Product Control
Division
By Manuel Ortega

OPTION #2 FOR HEAD CONNECTION OF TWIN SPAN STANDARD MULLIONS

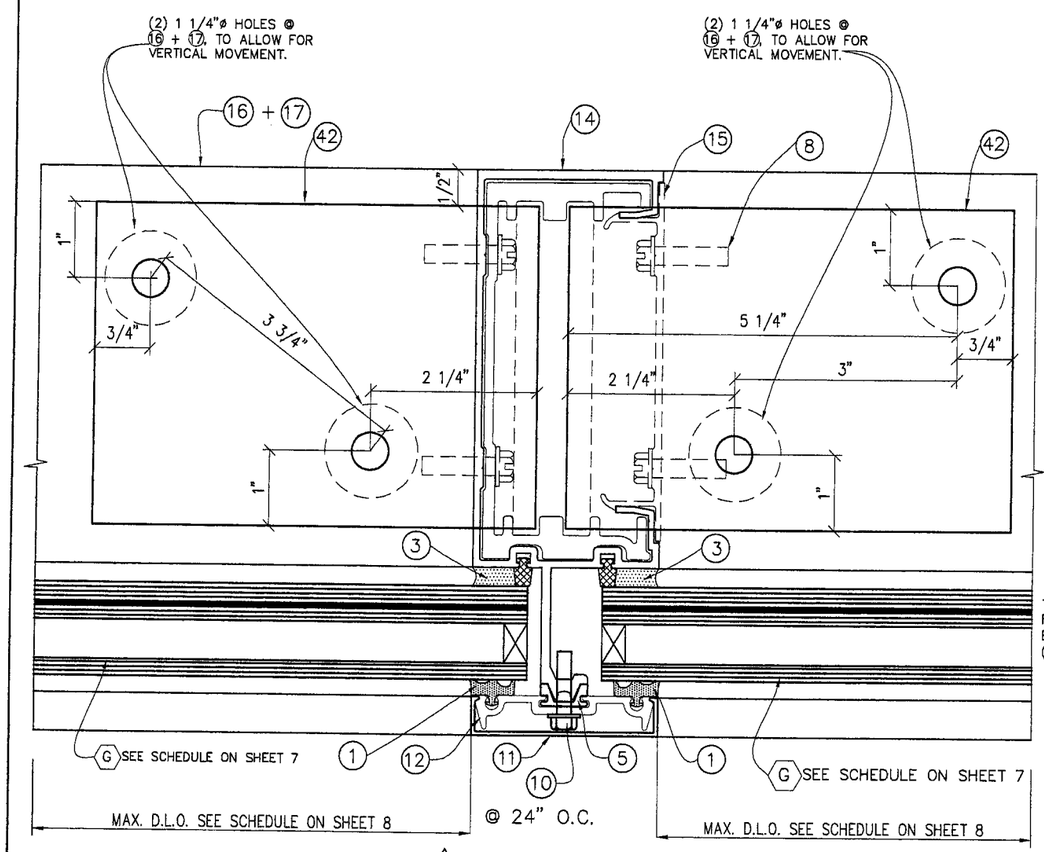

1

17A
HEAD ANCHOR (PLAN)

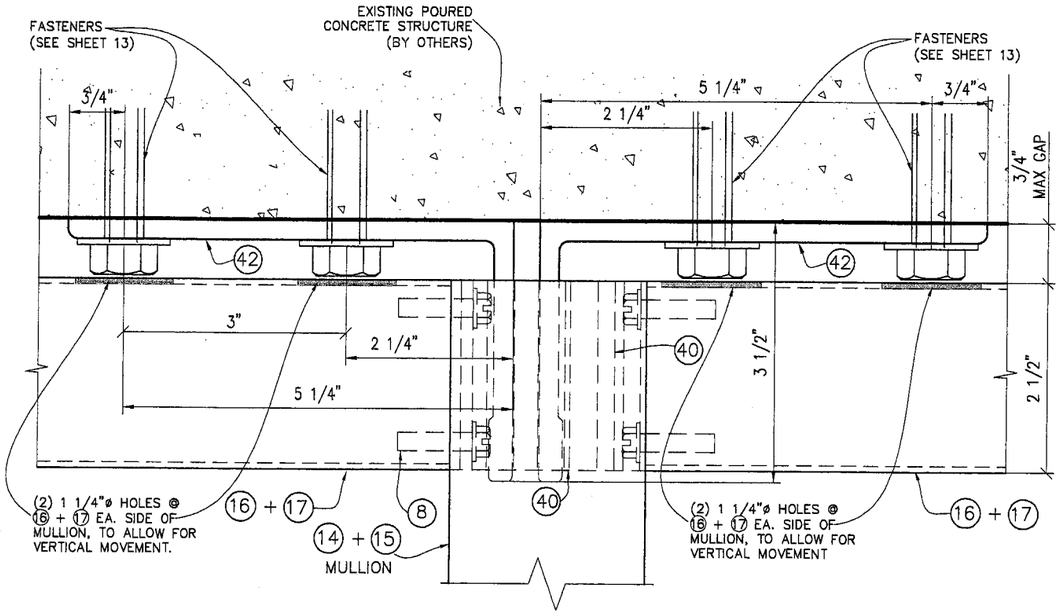

TO EXISTING POURED CONCRETE STRUCTURE

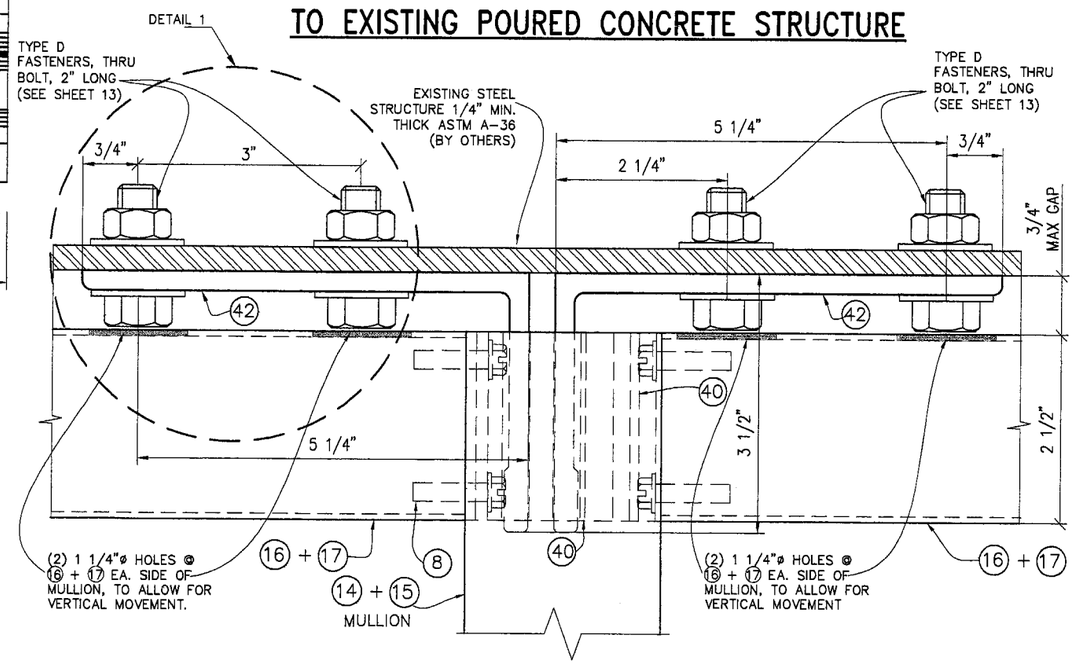

TO EXISTING STEEL STRUCTURE

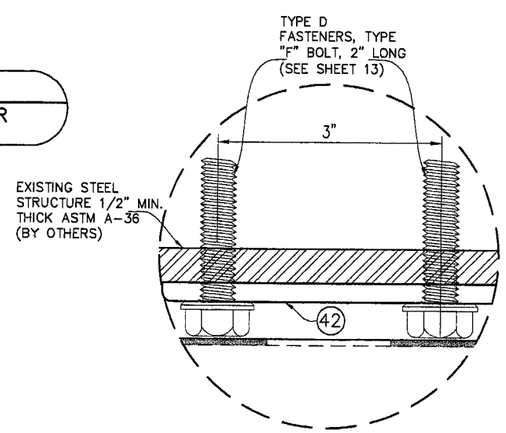

ALTERNATE FASTENER DETAIL 1

EXTERIOR ELEVATIONS 1

FLORIDA BUILDING CODE (High Velocity Hurricane Zone)

HR-251 CAPTURED CURTAIN WALL SYSTEM
SMALL MISSILE IMPACT INSULATED GLASS

Oldcastle Glass®
Engineered Products
803 AIRPORT RD. TERRELL TX 75160
PHONE: (972) 551-6100

REV. No	DESCRIPTION	DATE
1	GENERAL	11/11/08
2		
3		
4		

REV. No	DESCRIPTION	DATE

DRAWN BY R.E./M.C.V.
05/06/09 DATE
09-070 DRAWING No
SHEET 27 OF 36

© 2009 TILTECO INC.

TILTECO INC.
TILLIT TESTING & ENGINEERING COMPANY
10 N.W. 36th. St. Ste. 305, VIRGINIA GARDENS, FLORIDA 33166
Phone : (305)871-1530 . Fax : (305)871-1531
e-mail: tilteco@aol.com
EB-0006719
WALTER A. TILLIT Jr., P.E.
FLORIDA Lic. # 44167

WALTER A. TILLIT JR. LICENSE No. 44167 STATE OF FLORIDA PROFESSIONAL ENGINEER

MIAMI-DADE STAMP

Approved as complying with the Florida Building Code
Date MAC 6-24-2010
FIOA# 09-0721.04
Miami Dade Product Control Division
By: [signature]

HEAD CONNECTION OF TWIN SPAN JAMBS

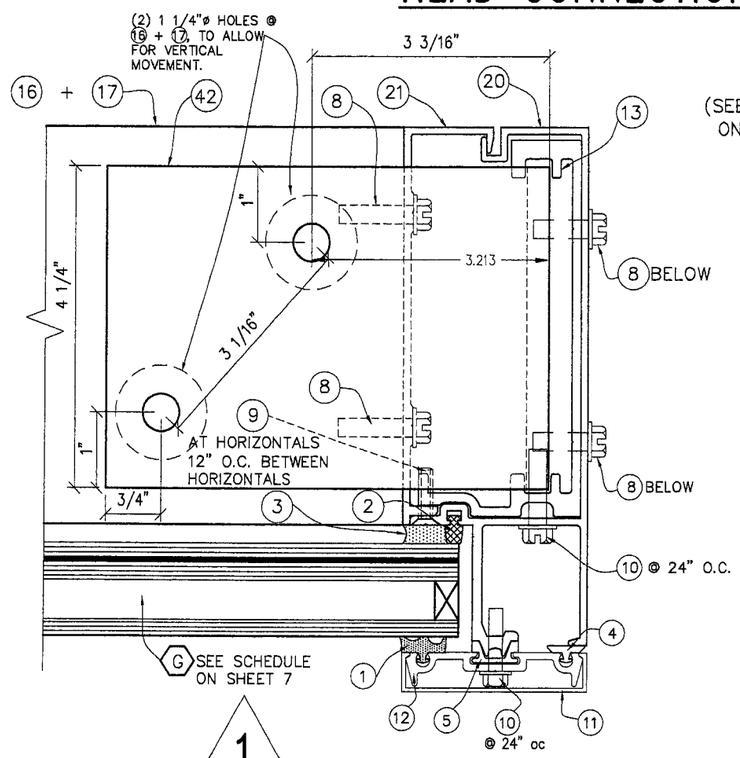

1

18
JAMB HEAD ANCHOR PLAN

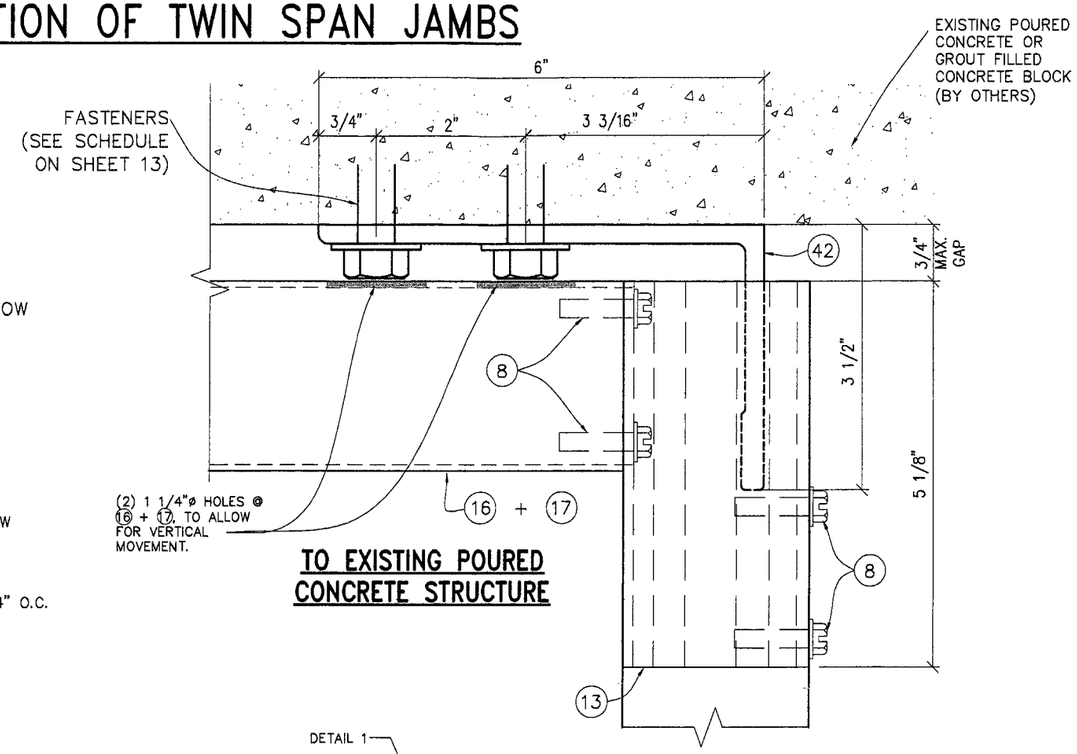

TO EXISTING POURED CONCRETE STRUCTURE

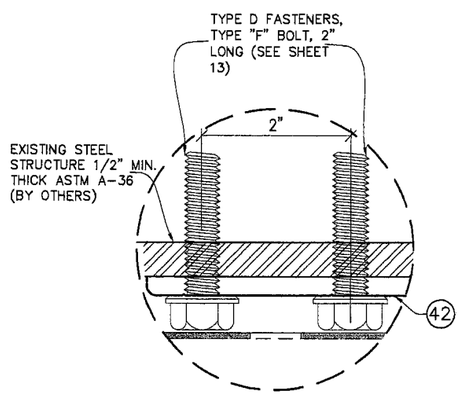

ALTERNATE FASTENER DETAIL 1

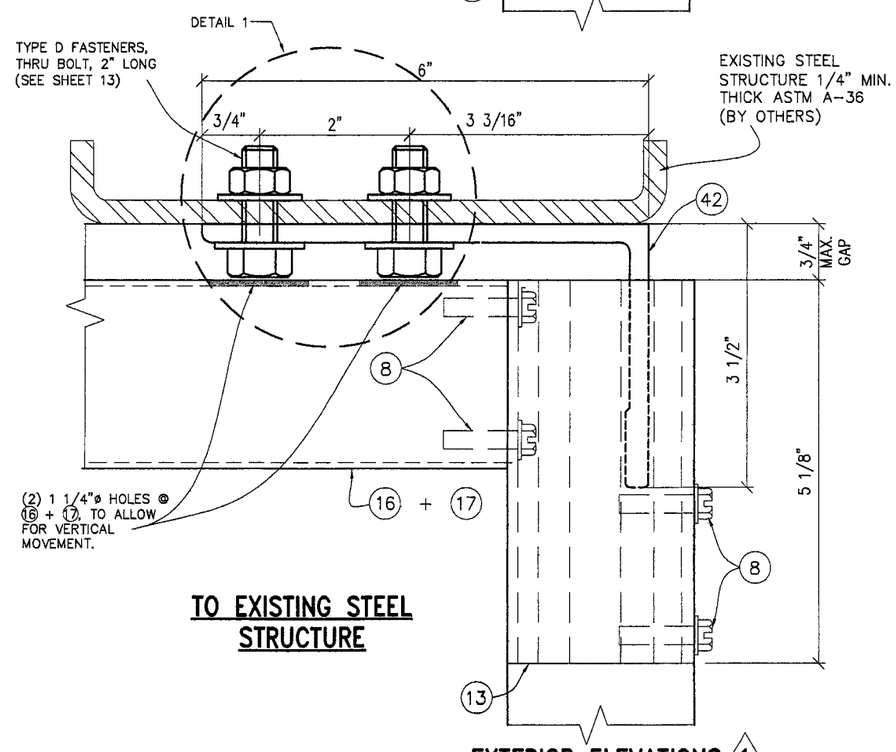

TO EXISTING STEEL STRUCTURE

EXTERIOR ELEVATIONS 1

FLORIDA BUILDING CODE (High Velocity Hurricane Zone)

HR-251 CAPTURED CURTAIN WALL SYSTEM
SMALL MISSILE IMPACT INSULATED GLASS

Oldcastle Glass®
Engineered Products
803 AIRPORT RD. TERRELL TX 75160
PHONE: (972) 551-6100

REV. No	DESCRIPTION	DATE
1	GENERAL	11/11/09
2		
3		
4		

DRAWN BY	DATE	DRAWING No	SHEET
F.P.	05/06/09	09-070	28 OF 36

© 2009 TILTECO INC.

TILTECO INC.
TILLIT TESTING & ENGINEERING COMPANY
N.W. 36th. St., Ste. 305, VIRGINIA GARDENS, FLORIDA 33166
Phone : (305)871-1530 . Fax : (305)871-1531
e-mail: tilteco@aol.com
EB-0006719
WALTER A. TILLIT Jr., P.E.
FLORIDA Lic. # 44167

WALTER A. TILLIT JR. LICENSE NO. 44167 STATE OF FLORIDA PROFESSIONAL ENGINEER

MIAMI-DADE STAMP

Approved as complying with the Florida Building Code
Date: 11-04-09
HVHZ 09-0721.04
Miami-Dade Product Control
By: [illegible]

HEAD CONNECTION DETAIL FOR TWIN SPAN CORNER MULLION

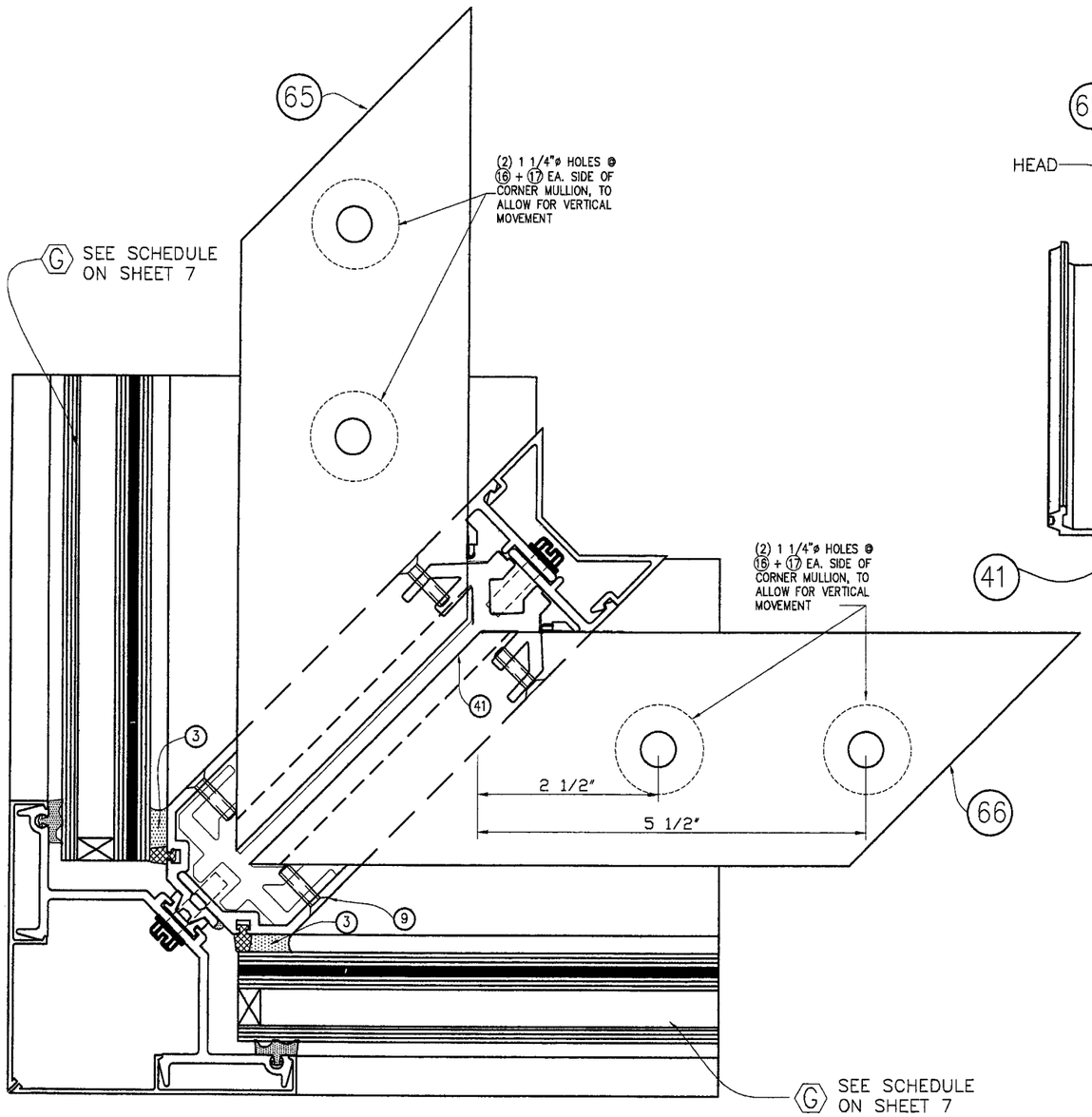

19
CORNER HEAD ANCHOR (PLAN)

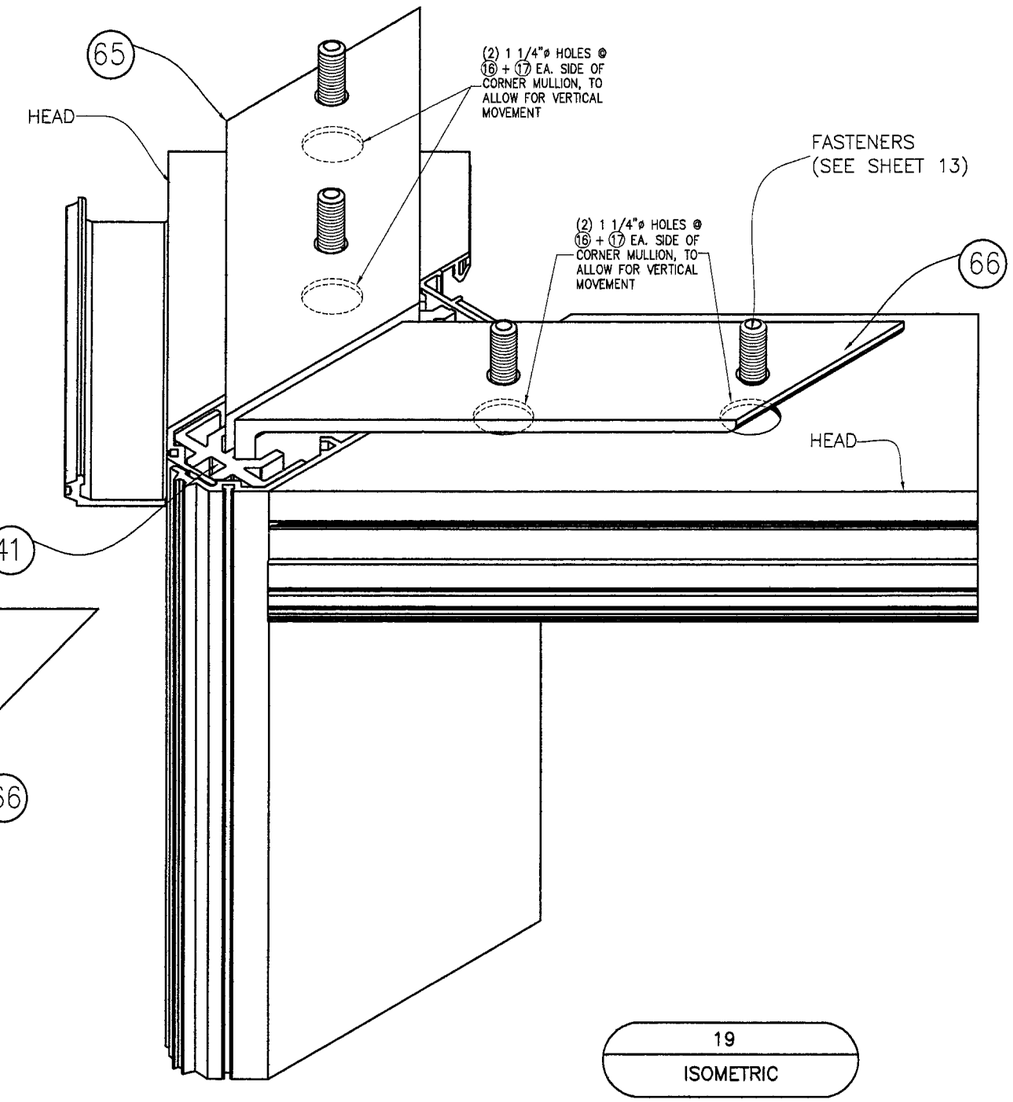

19
ISOMETRIC

FLORIDA BUILDING CODE (High Velocity Hurricane Zone)

HR-251 CAPTURED CURTAIN WALL SYSTEM
SMALL MISSILE IMPACT INSULATED GLASS

Oldcastle Glass®
Engineered Products
803 AIRPORT RD. TERRELL TX 75160
PHONE: (972) 551-6100

REV. No	DESCRIPTION	DATE
1	GENERAL	11/11/08
2		
3		
4		

DRAWN BY R.E./M.C.V.
05/06/09 DATE
09-070 DRAWING No
SHEET 29 OF 36

© 2009 TILTECO INC.

TILTECO INC.
TILLIT TESTING & ENGINEERING COMPANY
N.W. 36th. St., Ste. 305, VIRGINIA GARDENS, FLORIDA 33166
Phone : (305)871-1530 . Fax : (305)871-1531
e-mail: tilteco@aol.com
EB-0006719
WALTER A. TILLIT Jr., P.E.
FLORIDA Lic. # 44167

WALTER A. TILLIT JR. P.E. STAMP
LICENSE NO. 44167
STATE OF FLORIDA
PROFESSIONAL ENGINEER

MIAMI-DADE STAMP

Approved as complying with the Florida Building Code
Date: 10/01/09
NOA: 09-0721.01
Miami-Dade Product Control
By: Manuel Perez

MULLION AND JAMB SPLICES ON TWIN SPAN ONLY (PLAN)

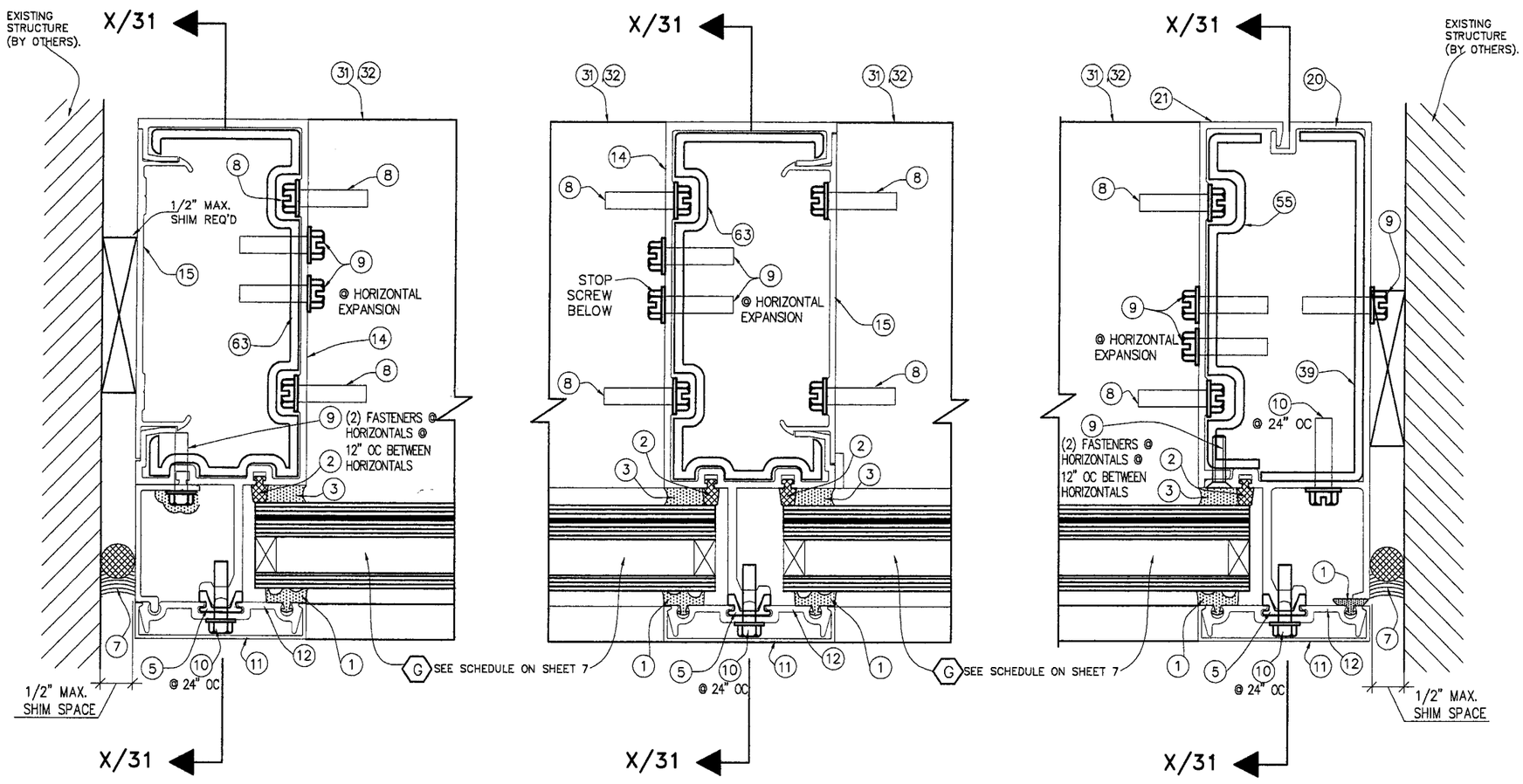

15A
SPLICE JOINT @ STANDARD JAMB W/63

15B
SPLICE JOINT @ STANDARD MULLION W/63

15C
SPLICE JOINT @ 2 PART JAMB W/55+39

FLORIDA BUILDING CODE (High Velocity Hurricane Zone)

HR-251 CAPTURED CURTAIN WALL SYSTEM
SMALL MISSILE IMPACT INSULATED GLASS

Oldcastle Glass®
Engineered Products
803 AIRPORT RD. TERRELL TX 75160
PHONE: (972) 551-6100

REV. No	DESCRIPTION	DATE	REV. No	DESCRIPTION	DATE
1			3		
2			4		

DRAWN BY F.P.
05/06/09 DATE
09-070 DRAWING No
SHEET 30 OF 36

© 2009 TILTECO INC.

TILTECO INC.
TILLIT TESTING & ENGINEERING COMPANY
10555 N.W. 36th. St., Ste. 305, VIRGINIA GARDENS, FLORIDA 33166
Phone : (305)871-1530 · Fax : (305)871-1531
e-mail: tilteco@aol.com
EB-0006719
WALTER A. TILLIT JR., P.E.
FLORIDA Lic. # 44167

WALTER A. TILLIT JR. LICENSE NO. 44167 STATE OF FLORIDA PROFESSIONAL ENGINEER

MIAMI-DADE STAMP

Approved as complying with the Florida Building Code
Date 11/04/09
NOA 09-0721.04
Miami-Dade Product Control
By

MULLION AND JAMB SPLICES ON TWIN SPAN ONLY (SIDE VIEW)

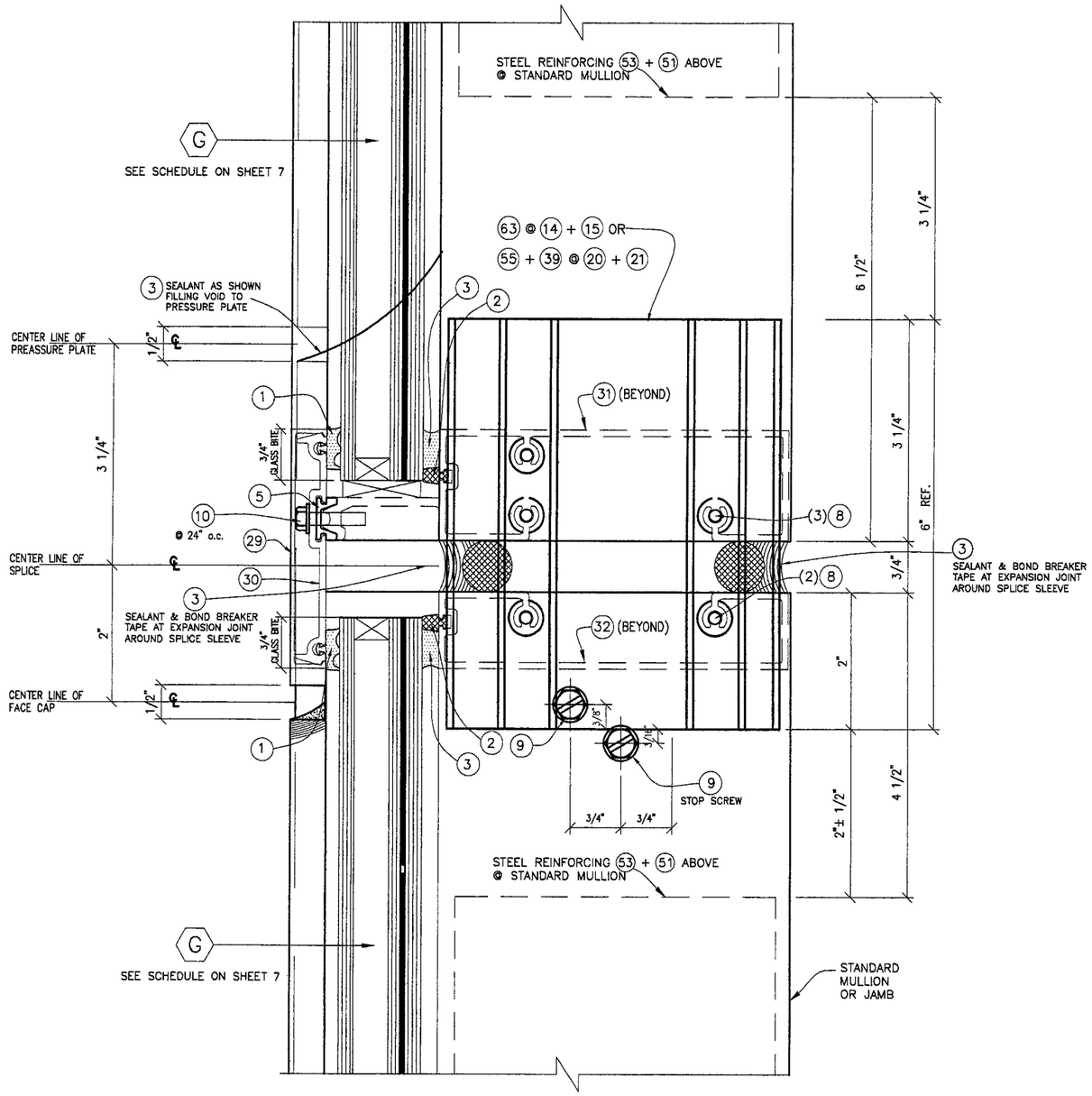

SECTION X–X
SPLICE JOINT @ STD MULLION/JAMB

FLORIDA BUILDING CODE (High Velocity Hurricane Zone)

HR-251 CAPTURED CURTAIN WALL SYSTEM
SMALL MISSILE IMPACT INSULATED GLASS

Oldcastle Glass®
Engineered Products
803 AIRPORT RD. TERRELL TX 75160
PHONE: (972) 551-6100

REV. No	DESCRIPTION	DATE
1	GENERAL	10/9/09
2		
3		
4		

DRAWN BY F.P./L.G./M.C.V.
05/06/09 DATE
09-070 DRAWING No
SHEET 31 OF 36

© 2009 TILTECO INC.

TILTECO INC.
TILLIT TESTING & ENGINEERING COMPANY
N.W. 36th. St., Ste. 305, VIRGINIA GARDENS, FLORIDA 33166
Phone : (305)871-1530 . Fax : (305)871-1531
e-mail: tilteco@aol.com
EB-0006719
WALTER A. TILLIT Jr., P.E.
FLORIDA Lic. # 44167

WALTER A. TILLIT JR
LICENSE No. 44167
STATE OF FLORIDA
PROFESSIONAL ENGINEER

MIAMI-DADE STAMP

Approved as complying with the Florida Building Code
Date 03-17-2010
NOA# 09-0721.04
Miami-Dade Product Control
By: Manuel Perez

CORNER MULLION SPLICE AT TWIN SPAN (PLAN)

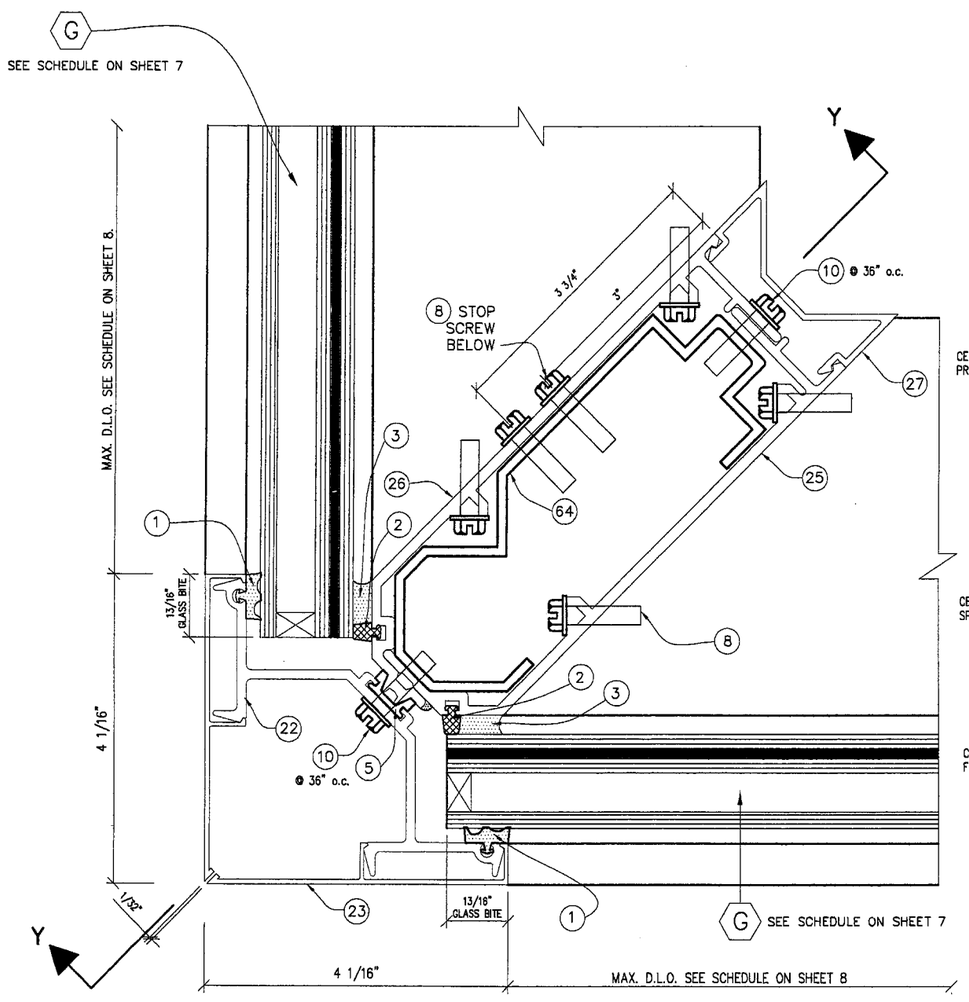

16
SPLICE JOINT @
90 DEG. CORNER
PLAN

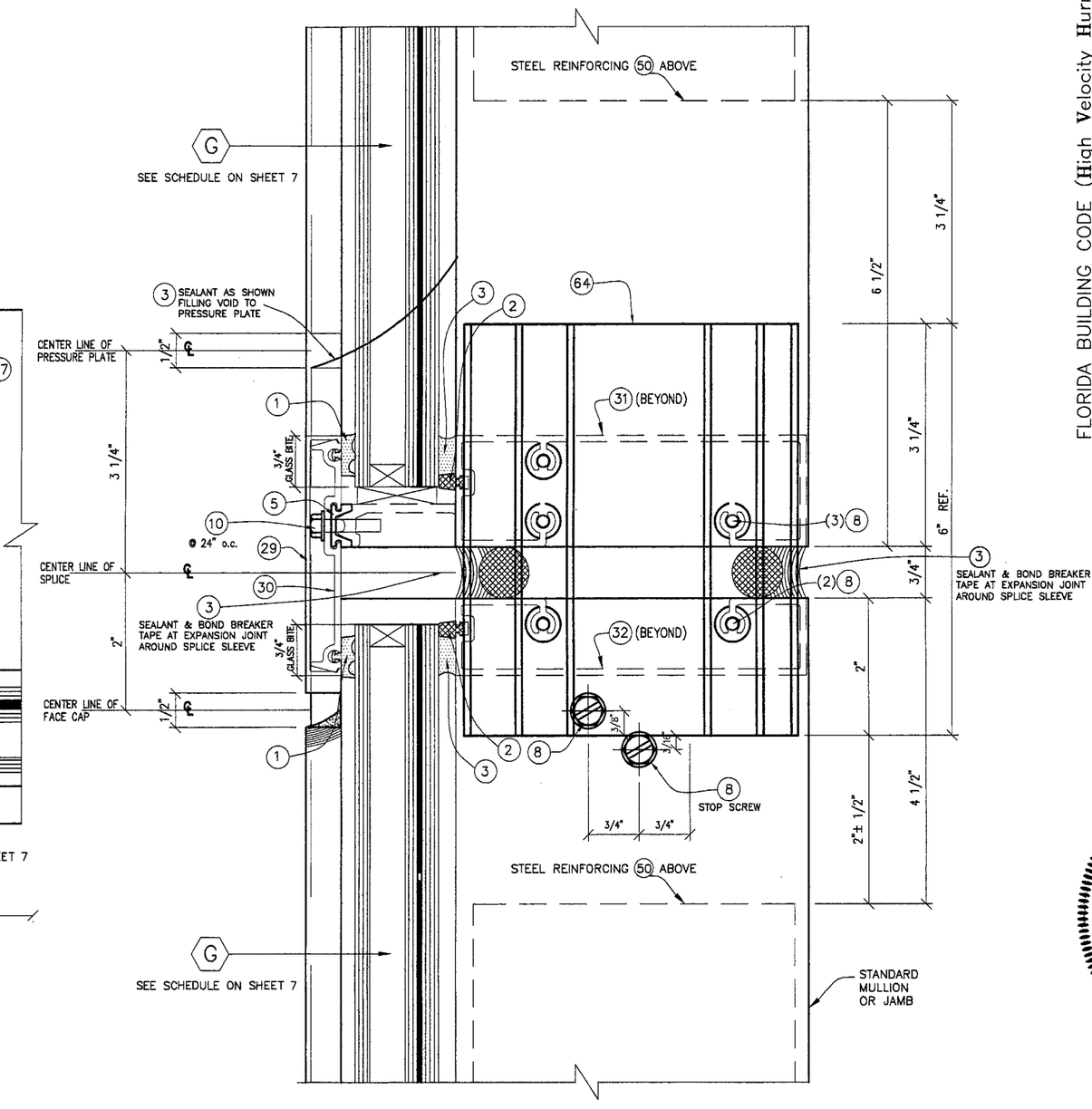

16
SPLICE JOINT @
90 DEG. CORNER
SECTION Y–Y

FLORIDA BUILDING CODE (High Velocity Hurricane Zone)

HR-251 CAPTURED CURTAIN WALL SYSTEM
SMALL MISSILE IMPACT INSULATED GLASS

Oldcastle Glass®
Engineered Products
803 AIRPORT RD. TERRELL TX 75160
PHONE: (972) 551-6100

REV. No	DESCRIPTION	DATE
1		
2		
3		
4		

DRAWN BY	05/06/09	09-070	SHEET 32 OF 36
F.P./L.G.	DATE	DRAWING No	

© 2009 TILTECO INC.

TILTECO INC.
TILLIT TESTING & ENGINEERING COMPANY
N.W. 36th. St., Ste. 305, VIRGINIA GARDENS, FLORIDA 33166
Phone : (305)871-1530 , Fax : (305)871-1531
e-mail: tilteco@aol.com
EB-0006719
WALTER A. TILLIT Jr., P.E.
FLORIDA Lic. # 44167

WALTER A. TILLIT JR.
LICENSE NO. 44167
STATE OF FLORIDA
PROFESSIONAL ENGINEER

MIAMI-DADE STAMP

Approval is conditional upon field inspection to verify compliance with Miami-Dade Product Control
Date: 04-07-21
Manuel Serra

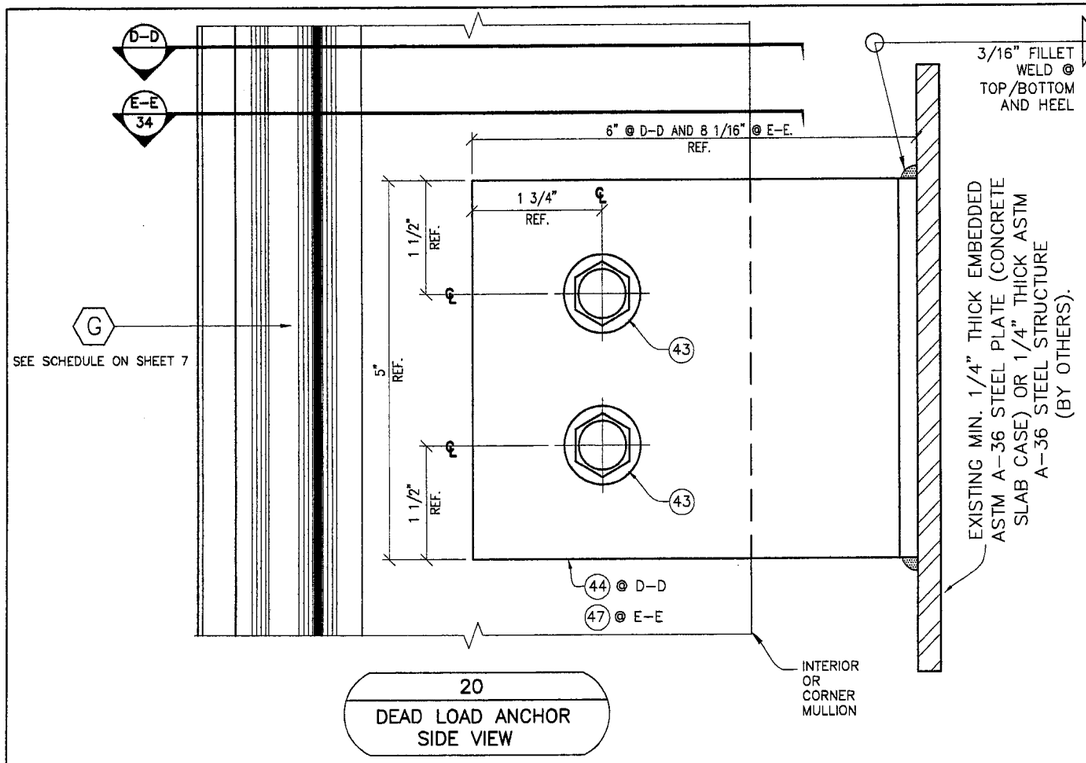

20
DEAD LOAD ANCHOR
SIDE VIEW

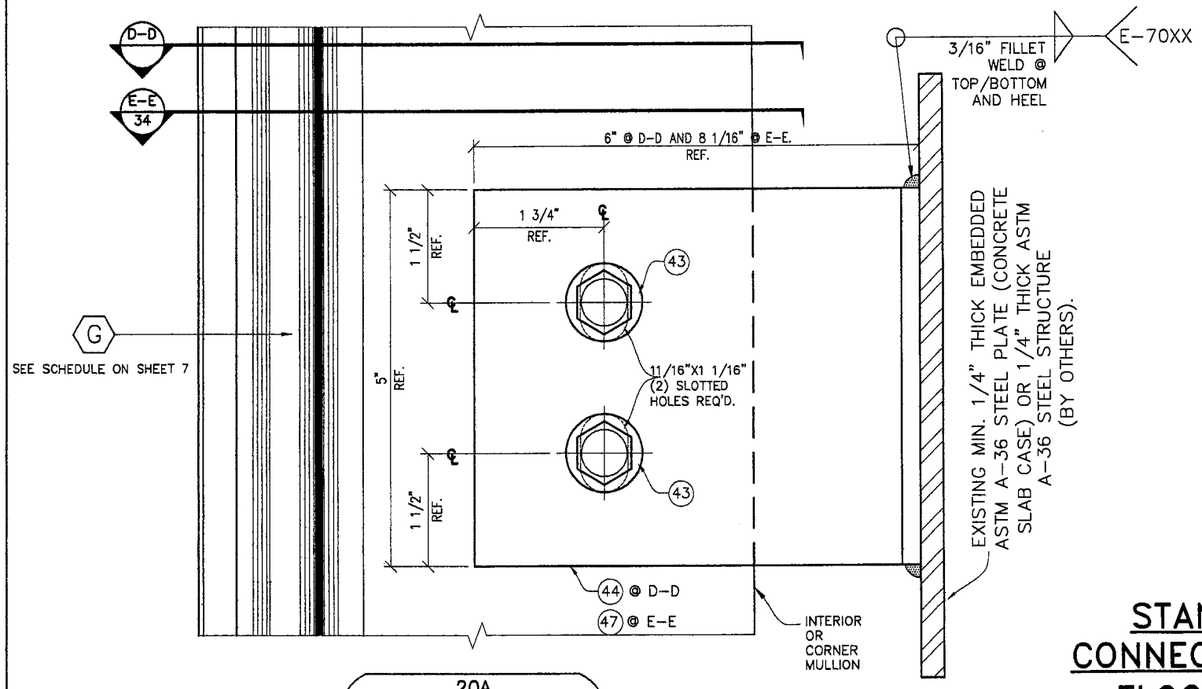

20A
WIND LOAD ANCHOR
SIDE VIEW

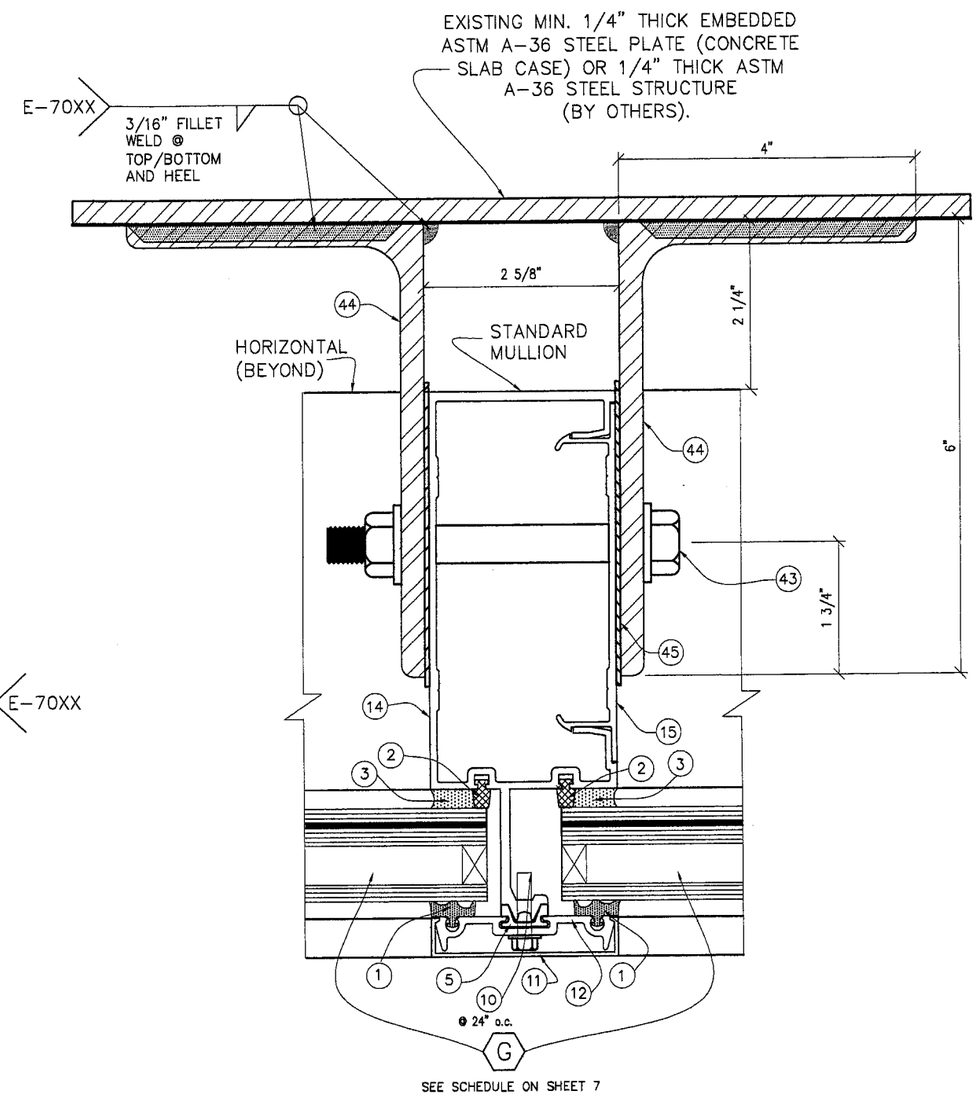

SECTION "D-D"
@ STANDARD
MULLION

STANDARD AND CORNER MULLION CONNECTION TO EXISTING INTERMEDIATE FLOOR STRUCTURE W/ DEAD LOAD ANCHORS

FLORIDA BUILDING CODE (High Velocity Hurricane Zone)

HR-251 CAPTURED CURTAIN WALL SYSTEM
SMALL MISSILE IMPACT INSULATED GLASS

Oldcastle Glass®
Engineered Products
803 AIRPORT RD. TERRELL TX 75160
PHONE: (972) 551-6100

REV. No	DESCRIPTION	DATE
1	GENERAL	10/9/08
2		
3		
4		

DRAWN BY LG./M.C.V./L.A.
05/06/09 DATE
09-070 DRAWING No
SHEET 33 OF 36

© 2009 TILTECO INC.

TILTECO INC.
TILLIT TESTING & ENGINEERING COMPANY
5555 N.W. 36th. St., Ste. 305, VIRGINIA GARDENS, FLORIDA 33166
Phone : (305)871-1530 . Fax : (305)871-1531
e-mail: tilteco@aol.com
EB-0006719
WALTER A. TILLIT Jr., P.E.
FLORIDA Lic. # 44167

WALTER A. TILLIT JR.
P.E. LICENSE
NO. 44167
STATE OF FLORIDA
PROFESSIONAL ENGINEER

MIAMI-DADE STAMP

Approved as complying with the Florida Building Code
Date: MARCH 27, 2010
NOA: 09-0707.04
Miami-Dade Product Control Division
By: Manuel Perez

CORNER MULLION CONNECTION TO EXISTING INTERMEDIATE FLOOR STRUCTURE W/ DEAD LOAD ANCHORS (PLAN)

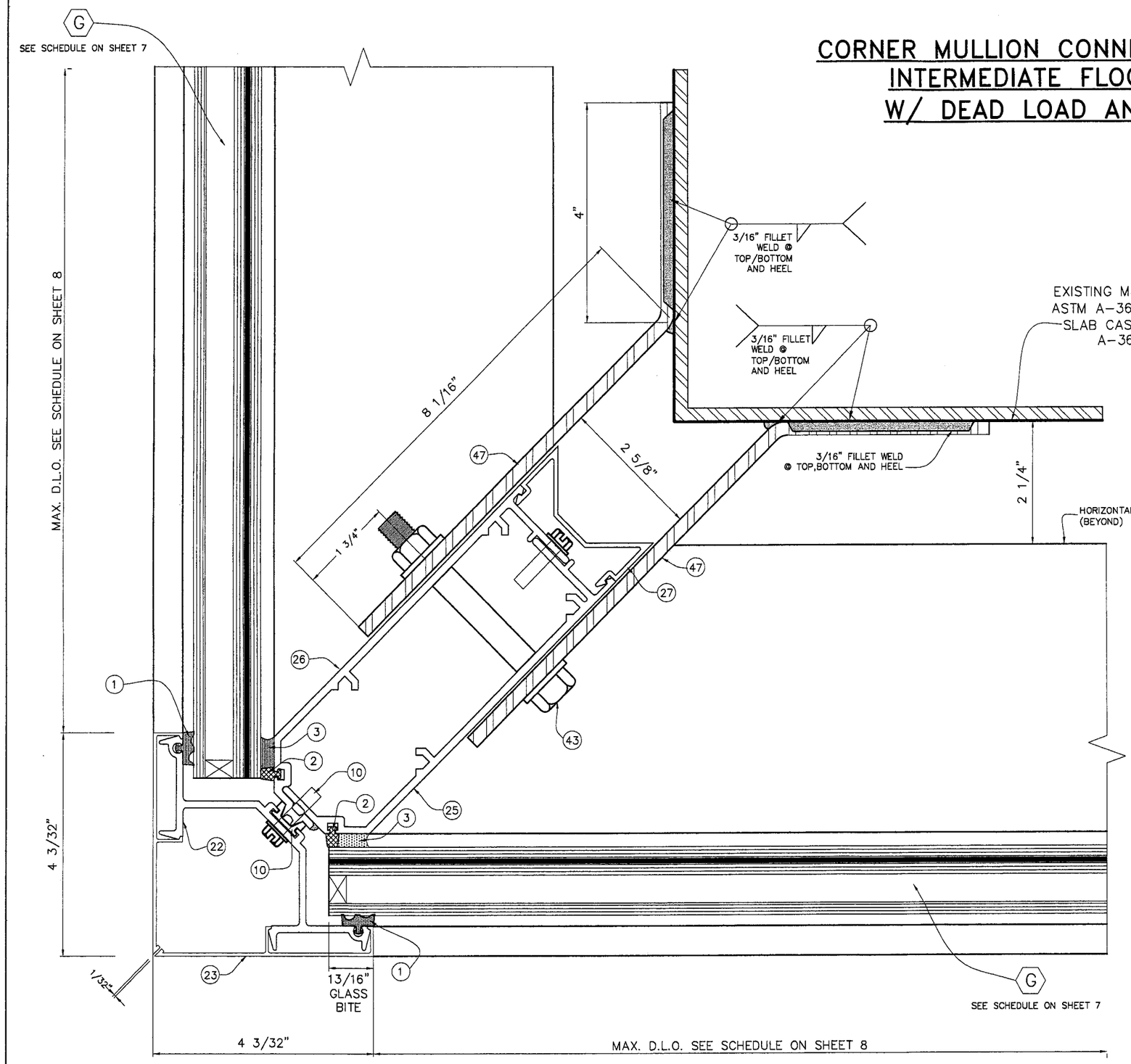

SECTION "E-E" @ CORNER MULLION

FLORIDA BUILDING CODE (High Velocity Hurricane Zone)

HR-251 CAPTURED CURTAIN WALL SYSTEM
SMALL MISSILE IMPACT INSULATED GLASS

Oldcastle Glass®
Engineered Products
803 AIRPORT RD. TERRELL TX 75160
PHONE: (972) 551-6100

REV. No	DESCRIPTION	DATE
1	GENERAL	10/9/09
2		
3		
4		

DRAWN BY F.P./L.G./M.C.V.
05/06/09 DATE
09-070 DRAWING No
SHEET 34 OF 36

© 2009 TILTECO INC.

TILTECO INC.
TILLIT TESTING & ENGINEERING COMPANY
8235 N.W. 36th. St., Ste. 305, VIRGINIA GARDENS, FLORIDA 33166
Phone : (305)871-1530 . Fax : (305)871-1531
e-mail: tilteco@aol.com
EB-0006719
WALTER A. TILLIT Jr., P.E.
FLORIDA Lic. # 44167

WALTER A. TILLIT JR. LICENSE NO. 44167 STATE OF FLORIDA PROFESSIONAL ENGINEER

MIAMI-DADE STAMP

Approved as complying with the Florida Building Code
Date 11/04/09
NOA# 09-0721.04
Miami Dade Product Control
By: Manuel Arsa

DOOR HEADER CONNECTION TO CURTAIN WALL HORIZONTALS

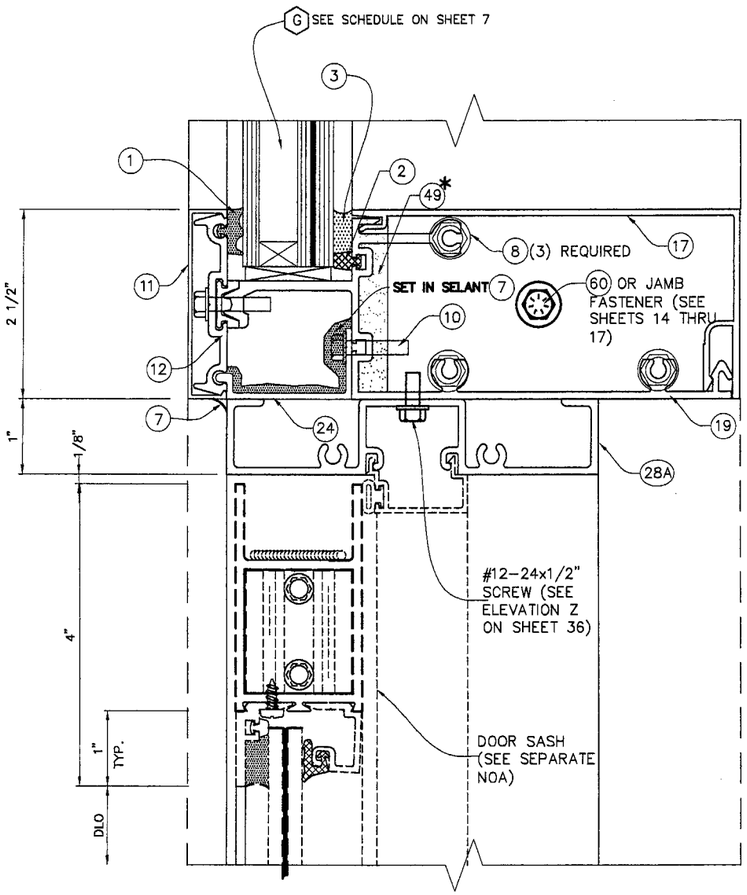

10
DR HEADER

DOOR SILL CONNECTION TO POURED CONCRETE STRUCTURE AND TO ADJACENT CURTAIN WALL MULLION "F" (SEE SHEET 9 FOR DEFINITION OF "F")

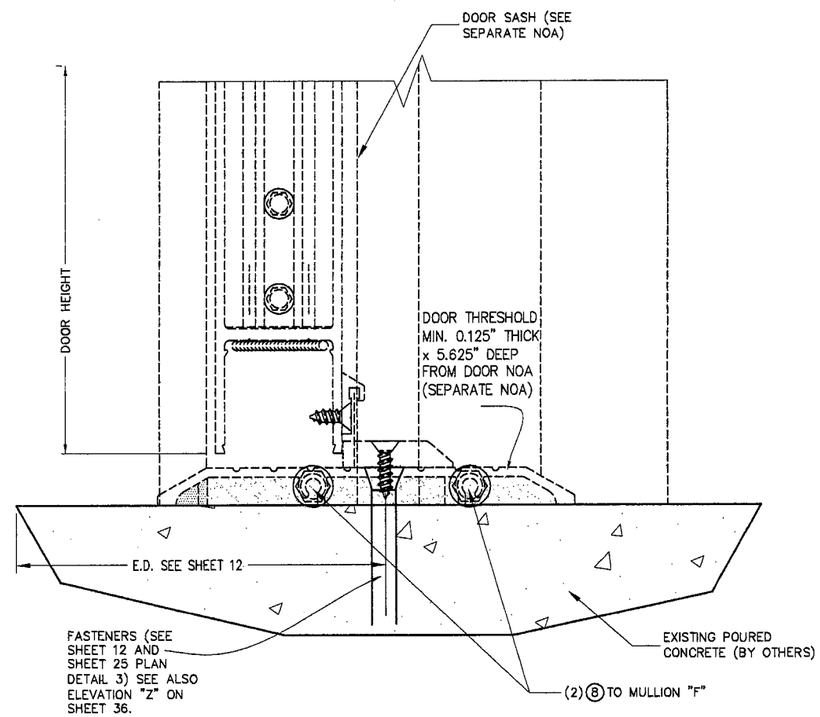

13
DOOR BM RAIL

FLORIDA BUILDING CODE (High Velocity Hurricane Zone)

HR-251 CAPTURED CURTAIN WALL SYSTEM
SMALL MISSILE IMPACT INSULATED GLASS

DRAWN BY F.P./M.C.V.
05/06/09 DATE
09-070 DRAWING No
SHEET 35 OF 36

Oldcastle Glass®
Engineered Products
803 AIRPORT RD. TERRELL TX 75160
PHONE: (972) 551-6100

REV. No	DESCRIPTION	DATE
1	GENERAL	10/9/09
2		
3		
4		

© 2009 TILTECO INC.

TILTECO INC.
TILLIT TESTING & ENGINEERING COMPANY
N.W. 36th. St., Ste. 305, VIRGINIA GARDENS, FLORIDA 33166
Phone : (305)871-1530 , Fax : (305)871-1531
e-mail: tilteco@aol.com
EB-0006719
WALTER A. TILLIT Jr., P.E.
FLORIDA Lic. # 44167

WALTER A. TILLIT JR.
LICENSE
P.E. STAMP
No. 44167
STATE OF FLORIDA
PROFESSIONAL ENGINEER

MIAMI-DADE STAMP

Approved as complying with the Florida Building Code
Date MARCH 22, 2010
NOA# 07-0721.04
Miami Dade Product Control Division
By

DOOR JAMBS CONNECTION TO CURTAIN WALL

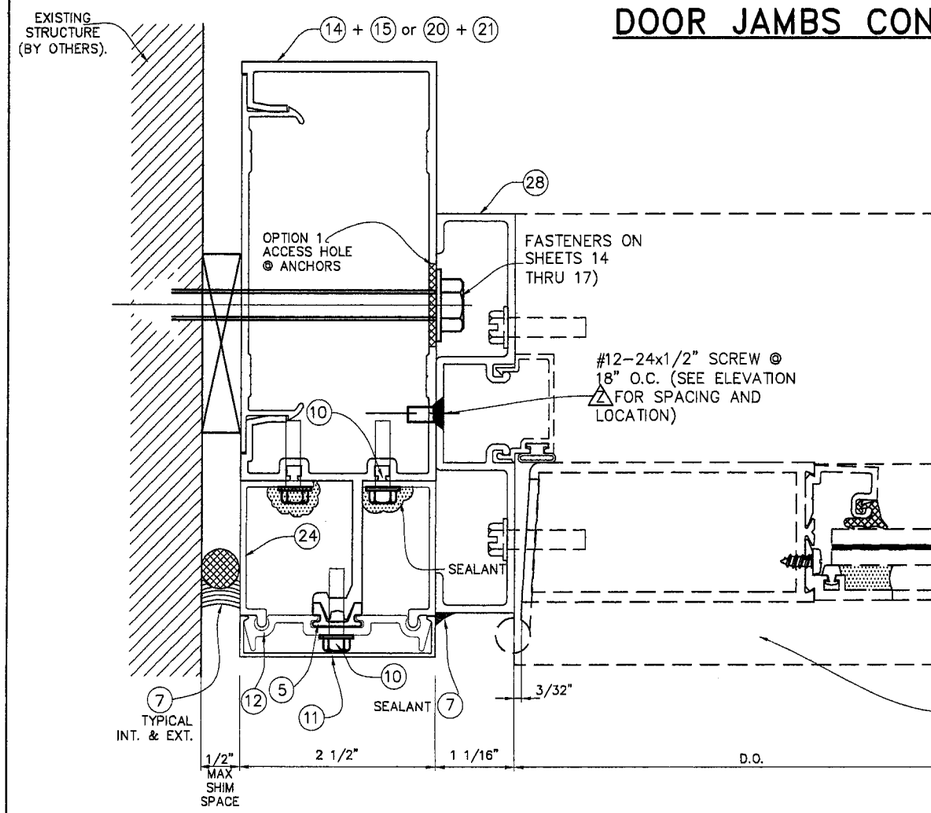

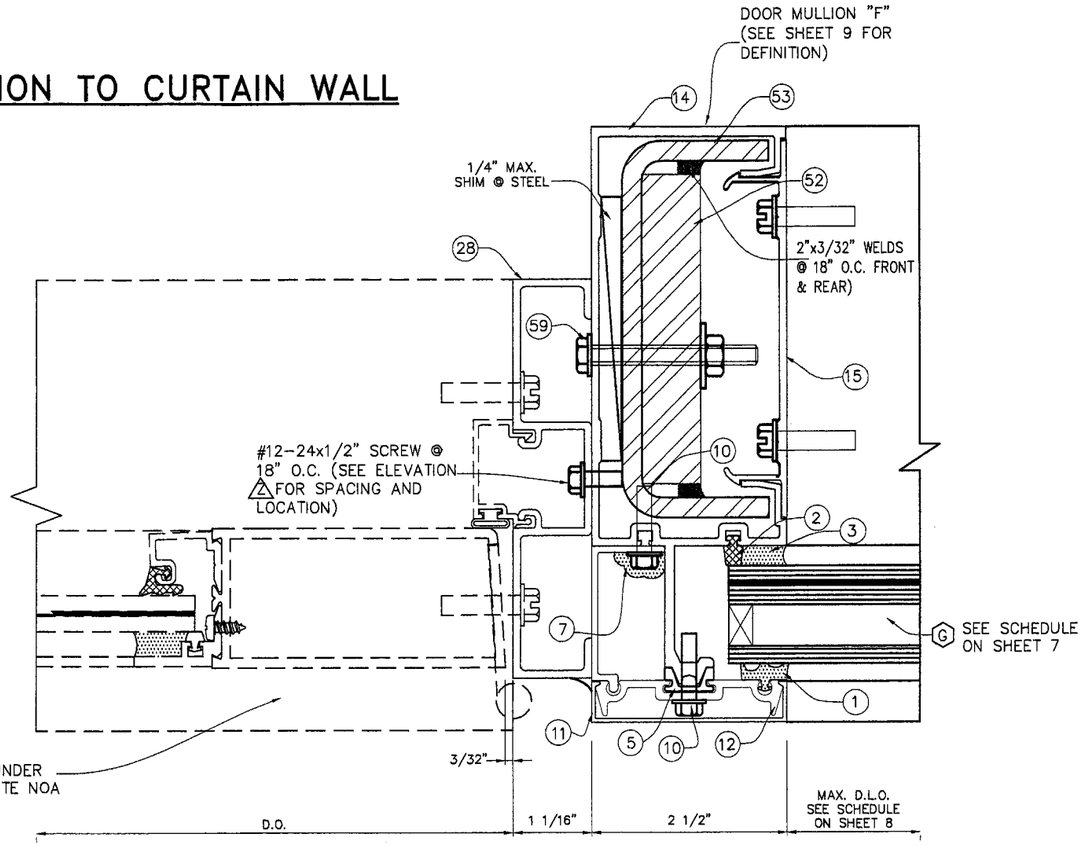

6
DOOR JAMB TO CURTAIN WALL JAMB

7
DOOR JAMB TO CURTAIN WALL DOOR MULLION

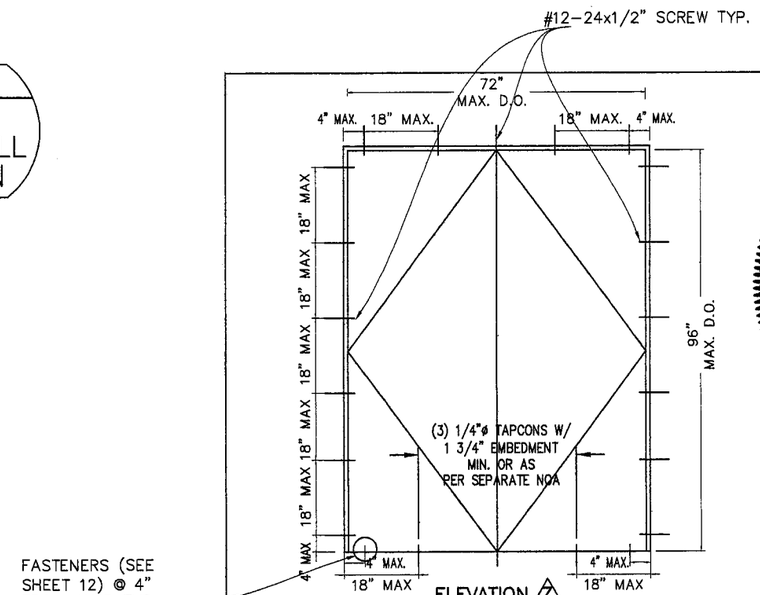

ELEVATION △2

LOCATIONS FOR DOOR FRAME ATTACHMENTS

ABOVE DIMENSIONS ARE MAXIMUM SIZES TESTED

FLORIDA BUILDING CODE (High Velocity Hurricane Zone)

HR-251 CAPTURED CURTAIN WALL SYSTEM
SMALL MISSILE IMPACT INSULATED GLASS

Oldcastle Glass®
Engineered Products
803 AIRPORT RD. TERRELL TX 75160
PHONE: (972) 551-6100

REV. No	DESCRIPTION	DATE
1	GENERAL	10/9/09
2		
3		
4		

DRAWN BY	DATE	DRAWING No	SHEET
F.P./M.C.V.	05/06/09	09-070	36 OF 36

© 2009 TILTECO INC.

TILTECO INC.
TILLIT TESTING & ENGINEERING COMPANY
7901 W. 36th. St., Ste. 305, VIRGINIA GARDENS, FLORIDA 33166
Phone : (305)871-1530 . Fax : (305)871-1531
e-mail: tilteco@aol.com
EB-0006719
WALTER A. TILLIT Jr., P.E.
FLORIDA Lic. # 44167

WALTER A. TILLIT JR. LICENSE NO. 44167 STATE OF FLORIDA PROFESSIONAL ENGINEER

PER STAMP

MIAMI-DADE STAMP

Approved as complying with the Florida Building Code
Date MARCH 24, 2010
NOA# 09-0722.04
Miami-Dade Product Control
Design
By