MIAMI-DADE

BUILDING CODE COMPLIANCE OFFICE (BCCO)
PRODUCT CONTROL DIVISION

**MIAMI-DADE** COUNTY, FLORIDA
METRO-DADE FLAGLER BUILDING
**140 WEST FLAGLER STREET, SUITE 1603**
MIAMI, FLORIDA 33130-1563
(305) 375-2901 FAX (305) 375-2908

# NOTICE OF ACCEPTANCE (NOA)

**R.C. Aluminum Industries, Inc.**
**2805 N.W. 75TH Ave.,**
**Miami, FL 33122**

**SCOPE:**
This NOA is being issued under the applicable rules and regulations governing the use of construction materials. The documentation submitted has been reviewed by Miami-Dade County Product Control Division and accepted by the Board of Rules and Appeals (BORA) to be used in Miami Dade County and other areas where allowed by the Authority Having Jurisdiction (AHJ).

This NOA shall not be valid after the expiration date stated below. The Miami-Dade County Product Control Division (In Miami Dade County) and/or the AHJ (in areas other than Miami Dade County) reserve the right to have this product or material tested for quality assurance purposes. If this product or material fails to perform in the accepted manner, the manufacturer will incur the expense of such testing and the AHJ may immediately revoke, modify, or suspend the use of such product or material within their jurisdiction. BORA reserves the right to revoke this acceptance, if it is determined by Miami-Dade County Product Control Division that this product or material fails to meet the requirements of the applicable building code.
This product is approved as described herein, and has been designed to comply with the High Velocity Hurricane Zone of the Florida Building Code.

**DESCRIPTION: Series "HP3060/3070"Aluminum Projected Window - SMI**

**APPROVAL DOCUMENT:** Drawing No. **W04-32,** titled "HP3060/3070 Alum. Projected Window-(S.M.I.)", sheets 1 through 8of 8, dated 04/15/04 with revision "**C**" on 05/06/09, prepared by AL-Farooq Corporation, signed and sealed by Arshad Viqar, P.E., bearing the Miami-Dade County Product Control Revision stamp with the Notice of Acceptance number and expiration date by the Miami-Dade County Product Control Division.

**MISSILE IMPACT RATING: Small Missile Impact Resistant**

**LABELING:** Each unit shall bear a permanent label with the manufacturer's name or logo, city, state and following statement: "Miami-Dade County Product Control Approved", unless otherwise noted herein.

**RENEWAL** of this NOA shall be considered after a renewal application has been filed and there has been no change in the applicable building code negatively affecting the performance of this product.

**TERMINATION** of this NOA will occur after the expiration date or if there has been a revision or change in the materials, use, and/or manufacture of the product or process. Misuse of this NOA as an endorsement of any product, for sales, advertising or any other purposes shall automatically terminate this NOA. Failure to comply with any section of this NOA shall be cause for termination and removal of NOA.

**ADVERTISEMENT:** The NOA number preceded by the words Miami-Dade County, Florida, and followed by the expiration date may be displayed in advertising literature. If any portion of the NOA is displayed, then it shall be done in its entirety.

**INSPECTION:** A copy of this entire NOA shall be provided to the user by the manufacturer or its distributors and shall be available for inspection at the job site at the request of the Building Official.
This NOA **revises NOA # 05-0817.11** and consists of this pages E-1 and E-2 as well as approval document mentioned above.
The submitted documentation was reviewed by **Fitz A. Harris, P.E.**

MIAMI-DADE COUNTY APPROVED

Fitz A. Harris

**NOA No 09-0722.09**
**Expiration Date: April 28, 2010**
**Approval Date: October 14 2009**

**R.C. Aluminum Industries, Inc.**

## NOTICE OF ACCEPTANCE: EVIDENCE SUBMITTED

**A. DRAWINGS**

1. Manufacturer's die drawings and sections.
2. Drawing No. **W04-32,** titled "HP3060/3070 Alum. Projected Window-(S.M.I.)", sheets 1 through 8 of 8, dated 04/15/04 with revision "C" on 05/06/05, prepared by AL-Farooq Corporation, signed and sealed by Arshad Viqar, P.E.

**B. TESTS**

1. Test reports on 1) Air Infiltration Test, per FBC, TAS 202-94
   2) Unif. Static Air Pressure Test, Loading per FBC, TAS 202-94
   3) Water Resistance Test, per FBC, TAS 202-94
   4) Small Missile Impact Test per FBC, TAS 201-94
   5) Cyclic Wind Pressure Loading per FBC, TAS 203-94
   6) Forced Entry Resist.Test, per FBC 2411.3.2.1 (b) and TAS 202-94 along with marked-up drawings and installation diagram of an aluminum window wall system with projected window, prepared by Fenestration Testing Laboratory, Inc., Test Report No. **FTL-4313**, dated 09/28/04, signed and sealed by Edmundo Largaespada, P.E.

***"Submitted under NOA# 05-0203.01"***

**C. CALCULATIONS**

1. Revised Anchor Calculations, and Structural Analysis, prepared by AL-Farooq Corporation, dated 05/05/09, signed and sealed by Arshad Viqar, P.E.
   **Complies with ASTM E1300-02/04**
   **No 1/3 stress increase used in anchors into masonry or steel substrate.**

**D. QUALITY ASSURANCE**

1. Miami Dade Building Code Compliance Office (BCCO).

**E. MATERIAL CERTIFICATIONS**

1. Notice of Acceptance No. **05-1208.02** issued to E.I. DuPont DeNemours for "Dupont Butacite ® PVB", dated 01/05/06, expiring on 12/11/10.
2. Notice of Acceptance No. **06-0216.06** issued to Solutia, Inc.for "Saflex III G clear or colored interlayer", dated 05/04/06, expiring on 05/21/2011.

**F. STATEMENTS**

1. Statement letter of conformance with the 2007 FBC, dated 05/07/09, signed by Arshad Viqar, P.E.

2. Statement letter of no financial interest, dated 05/07/09 signed by Arshad Viqar, P.E.

Fitz A. Harris

**Fitz A. Harris, P.E.**
**Product Control Examiner**
**NOA No 09-0722.09**
**Expiration Date: April 28, 2010**
**Approval Date : October 14, 2009**

## NOTICE OF ACCEPTANCE: EVIDENCE SUBMITTED

### G. OTHER

1. Letter from the consultant, dated 05/07/09, stating that he is the engineer assuming the work performed by the previous engineer Humayoun Farooq.
2. Notice of Acceptance No. **05-0817.11**, issued to R.C. Aluminum Industries, Inc. for their Series "H.P. 3060/3070' Aluminum Projected Window - S.M.I., approved on 01/05/06 and expiring on 04/28/10.

**Fitz A. Harris, P.E.**
**Product Control Examiner**
**NOA No 09-0722.09**
**Expiration Date: April 28, 2010**
**Approval Date : October 14, 2009**

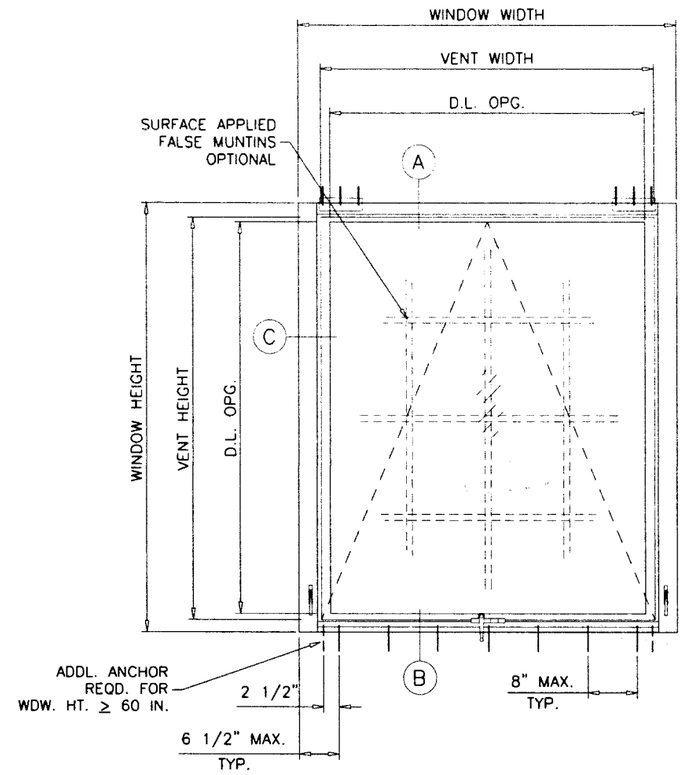


## 'X' SIZES

VENT WIDTH = WINDOW WIDTH – 7 1/4""
GLASS D.L.O. WIDTH = VENT WIDTH – 3"
VENT HEIGHT = WINDOW HEIGHT – 4 1/4"
GLASS D.L.O. HEIGHT = VENT HEIGHT – 1 3/4"

## TYPICAL ELEVATION

( SEE CHART ON SHEET 2 FOR MAX. APPROVED SIZES )
SEE SHEET 3 FOR SPECIAL CONFIGURATIONS

THIS SYSTEM IS RATED FOR SMALL MISSILE IMPACT.
MIAMI–DADE COUNTY APPROVED IMPACT RESISTANT SHUTTERS
REQUIRED FOR INSTALLATIONS UP TO 30 FT. OF GRADE.
SHUTTERS NOT REQD. FOR INSTALLATIONS ABOVE 30 FT. OF GRADE.

## HP3060/3070 ALUMINUM PROJECTED WINDOW

APPROVAL APPLIES TO:
SINGLE VENT WINDOWS OF X CONFIGURATION.
PROJECTED/FIXED COMBINATIONS OF X/O, O/X OR O/X/O ETC.
ALSO SIDE BY SIDE COMBINATIONS OF TWO OR MORE WINDOWS.

---

THIS PRODUCT HAS BEEN DESIGNED AND TESTED TO COMPLY WITH THE REQUIREMENTS OF THE FLORIDA BUILDING CODE 2004/2007 EDITION INCLUDING HIGH VELOCITY HURRICANE ZONE (HVHZ).

ANCHORS SHALL BE AS LISTED, SPACED AS SHOWN ON DETAILS, ANCHORS EMBEDMENT TO BASE MATERIAL SHALL BE BEYOND WALL DRESSING OR STUCCO.

ANCHORING OR LOADING CONDITIONS NOT SHOWN IN THESE DETAILS ARE NOT PART OF THIS APPROVAL.

MATERIALS INCLUDING BUT NOT LIMITED TO STEEL/METAL SCREWS, THAT COME INTO CONTACT WITH OTHER DISSIMILAR MATERIALS SHALL MEET THE REQUIREMENTS OF 2004/2007 FLORIDA BLDG. CODE SECTION 2003.8.4.

LAMINATED GLASS
SMALL MISSILE IMPACT

PRODUCT REVISED
as complying with the Florida Building Code
Acceptance No 09-0722.09
Expiration Date 4.27.2010
By Billy Harris
Miami Dade Product Control Division

Engr: ARSHAD VIQAR
CIVIL
FLA. PE # 38863
C.A.N. 3538

MAY 1 4 2009


AL-FAROOQ CORPORATION
ENGINEERS & PRODUCT DEVELOPMENT
1235 S.W. 87 AVE
MIAMI, FLORIDA 33174
TEL. (305) 264-8100 FAX. (305) 262-6978


STORE\W04-32RC

HP3060/3070 ALUM. PROJECTED WINDOW (S.M.I.)


R.C. ALUMINUM INDUSTRIES INC.
2805 N.W. 75 TH AVE.
MIAMI, FL. 33122
TEL. (305) 592-1515 FAX. (305) 592-2184


revisions:

| no | date | by | description |
|---|---|---|---|
| A | 05.10.05 | | NOTES REV. |
| B | 11.02.05 | | NOTE REV. |
| C | 05.06.09 | | UPDATED FOR 2007 FBC |

date: 04-15-04
scale: 1/2"=1'-0"
dr. by: HAMID
chk. by:

drawing no.
W04-32

sheet 1 of 8

DESIGN LOAD CAPACITY – PSF
SINGLE VENT PROJECTED WINDOW

| VENT SIZES | | GLASS TYPE 'A' | | GLASS TYPE 'B' | | GLASS TYPE 'C' | |
|---|---|---|---|---|---|---|---|
| WIDTH | HEIGHT | EXT.(+) | INT.(–) | EXT.(+) | INT.(–) | EXT.(+) | INT.(–) |
| 24" | 24" | 110.0 | 120.0 | 120.0 | 160.0 | 110.0 | 110.0 |
| 30" | | 110.0 | 120.0 | 120.0 | 160.0 | 110.0 | 110.0 |
| 36" | | 110.0 | 120.0 | 120.0 | 160.0 | 110.0 | 110.0 |
| 42" | | 110.0 | 120.0 | 120.0 | 160.0 | 110.0 | 110.0 |
| 48" | | 110.0 | 120.0 | 87.5 | 116.6 | 104.5 | 104.5 |
| 54" | | 110.0 | 110.7 | 60.1 | 80.1 | 71.7 | 71.7 |
| 60" | | 110.0 | 110.0 | 43.1 | 57.5 | 51.5 | 51.5 |
| 24" | 30" | 110.0 | 120.0 | 120.0 | 160.0 | 110.0 | 110.0 |
| 30" | | 110.0 | 120.0 | 120.0 | 160.0 | 110.0 | 110.0 |
| 36" | | 110.0 | 120.0 | 120.0 | 160.0 | 110.0 | 110.0 |
| 42" | | 110.0 | 120.0 | 117.2 | 156.3 | 110.0 | 110.0 |
| 48" | | 110.0 | 120.0 | – | – | 88.9 | 88.9 |
| 54" | | 110.0 | 110.0 | – | – | 60.2 | 60.2 |
| 60" | | 94.9 | 94.9 | – | – | 42.8 | 42.8 |
| 24" | 36" | 110.0 | 120.0 | 120.0 | 160.0 | 110.0 | 110.0 |
| 30" | | 110.0 | 120.0 | 120.0 | 160.0 | 110.0 | 110.0 |
| 36" | | 110.0 | 120.0 | 120.0 | 160.0 | 110.0 | 110.0 |
| 42" | | 110.0 | 120.0 | 108.3 | 144.4 | 110.0 | 110.0 |
| 48" | | 110.0 | 120.0 | – | – | 80.0 | 80.0 |
| 54" | | 110.0 | 110.0 | – | – | 53.3 | 53.3 |
| 60" | | 48.1 | 57.7 | – | – | 37.4 | 37.4 |
| 24" | 42" | 100.0 | 120.0 | 98.3 | 131.1 | 110.0 | 110.0 |
| 30" | | 100.0 | 120.0 | – | – | 110.0 | 110.0 |
| 36" | | 100.0 | 120.0 | – | – | 110.0 | 110.0 |
| 42" | | 100.0 | 120.0 | – | – | 110.0 | 110.0 |
| 48" | | 97.0 | 116.3 | – | – | 75.4 | 75.4 |
| 54" | | 63.2 | 75.8 | – | – | 49.1 | 49.1 |
| 60" | | 43.7 | 52.5 | – | – | 34.0 | 34.0 |
| 24" | 48" | 100.0 | 120.0 | – | – | 110.0 | 110.0 |
| 30" | | 100.0 | 120.0 | – | – | 110.0 | 110.0 |
| 36" | | 100.0 | 120.0 | – | – | 110.0 | 110.0 |
| 42" | | 100.0 | 120.0 | – | – | 110.0 | 110.0 |
| 48" | | 94.9 | 113.9 | – | – | 73.8 | 73.8 |
| 54" | | 60.3 | 72.3 | – | – | 46.9 | 46.9 |
| 60" | | 41.0 | 49.2 | – | – | 31.8 | 31.8 |
| 24" | 54" | 100.0 | 120.0 | – | – | 110.0 | 110.0 |
| 30" | | 100.0 | 120.0 | – | – | 110.0 | 110.0 |
| 36" | | 100.0 | 120.0 | – | – | 110.0 | 110.0 |
| 42" | | 100.0 | 120.0 | – | – | 110.0 | 110.0 |
| 48" | | 94.9 | 113.9 | – | – | 73.8 | 73.8 |
| 54" | | 59.2 | 71.1 | – | – | 46.1 | 46.1 |
| 60" | | – | – | – | – | 30.7 | 30.7 |
| 24" | 60" | 100.0 | 120.0 | – | – | 110.0 | 110.0 |
| 30" | | 100.0 | 120.0 | – | – | 110.0 | 110.0 |
| 36" | | 100.0 | 120.0 | – | – | 110.0 | 110.0 |
| 42" | | 100.0 | 120.0 | – | – | 110.0 | 110.0 |
| 48" | | 94.9 | 113.9 | – | – | 73.8 | 73.8 |
| 54" | | – | – | – | – | 46.1 | 46.1 |
| 24" | 66" | 100.0 | 120.0 | – | – | 110.0 | 110.0 |
| 30" | | 100.0 | 120.0 | – | – | 110.0 | 110.0 |
| 36" | | 100.0 | 120.0 | – | – | 110.0 | 110.0 |
| 42" | | 100.0 | 120.0 | – | – | 110.0 | 110.0 |
| 48" | | – | – | – | – | 73.8 | 73.8 |

DESIGN LOAD CAPACITY – PSF
SINGLE VENT PROJECTED WINDOW

| VENT SIZES | | GLASS TYPE 'A' | | GLASS TYPE 'B' | | GLASS TYPE 'C' | |
|---|---|---|---|---|---|---|---|
| WIDTH | HEIGHT | EXT.(+) | INT.(–) | EXT.(+) | INT.(–) | EXT.(+) | INT.(–) |
| 24" | 72" | 100.0 | 120.0 | – | – | 110.0 | 110.0 |
| 30" | | 100.0 | 119.5 | – | – | 110.0 | 110.0 |
| 36" | | 100.0 | 110.0 | – | – | 110.0 | 110.0 |
| 42" | | 76.4 | 91.7 | – | – | 110.0 | 110.0 |
| 24" | 78" | 100.0 | 113.7 | – | – | 110.0 | 110.0 |
| 30" | | 100.0 | 110.0 | – | – | 110.0 | 110.0 |
| 36" | | 100.0 | 110.0 | – | – | 110.0 | 110.0 |

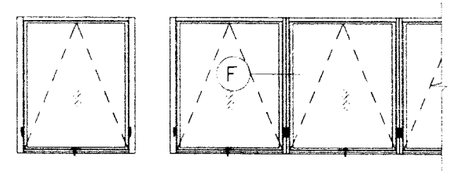


APPROVED CONFIGURATIONS

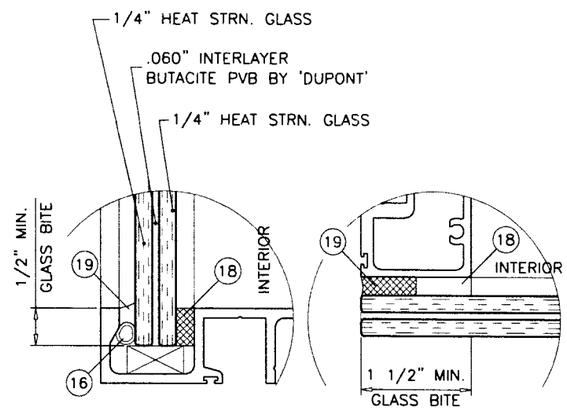


GLASS TYPE 'A'

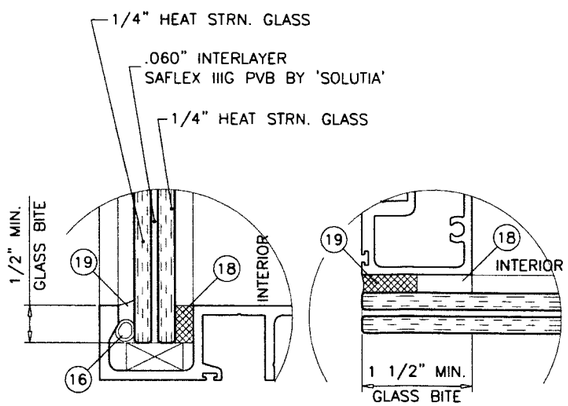


GLASS TYPE 'B'

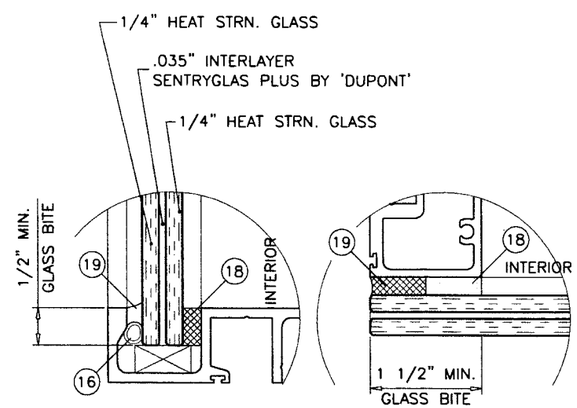


GLASS TYPE 'C'

GLAZING OPTIONS

NOTE:
GLASS CAPACITIES ON THIS SHEET ARE BASED ON ASTM E1300–02/04 (3 SEC. GUSTS) AND FLORIDA BUILDING COMMISSION DECLARATORY STATEMENT DCA05–DEC–219

Engr: ARSHAD VIQAR
CIVIL
FLA. P.E. # 38863
C.A.N. 3538

MAY 14 2009

PRODUCT REVISED
as complying with the Florida Building Code
Acceptance No 09-0722.09
Expiration Date 4.28.2010
By Tilly Harris
Miami Dade Product Control Division


AL-FAROOQ CORPORATION
ENGINEERS & PRODUCT DEVELOPMENT
1235 S.W. 87 AVE
MIAMI, FLORIDA 33174
TEL. (305) 264-8100 FAX. (305) 262-6978
STORE\W04-32RC

HP3060/3070 ALUM. PROJECTED WINDOW (S.M.I.)
R.C. ALUMINUM INDUSTRIES INC.
2805 N.W. 75 TH AVE.
MIAMI, FL. 33122
TEL. (305) 592-1515 FAX. (305) 592-2184


revisions:

| no | date | by | description |
|---|---|---|---|
| A | 05.10.05 | | NOTES REV. |
| B | 11.02.05 | | NOTE REV. |
| C | 05.06.09 | | UPDATED FOR 2007 FBC |

date: 04-15-04
scale: 1/2"=1'-0"
dr. by: HAMID
chk. by:

drawing no.
W04-32

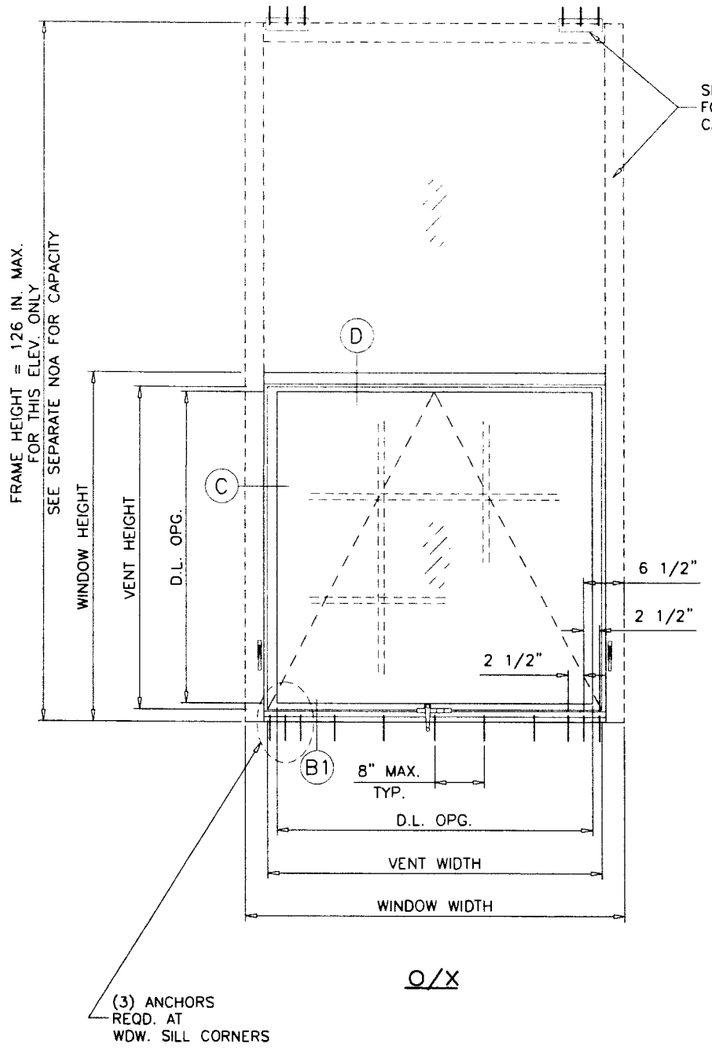


O/X

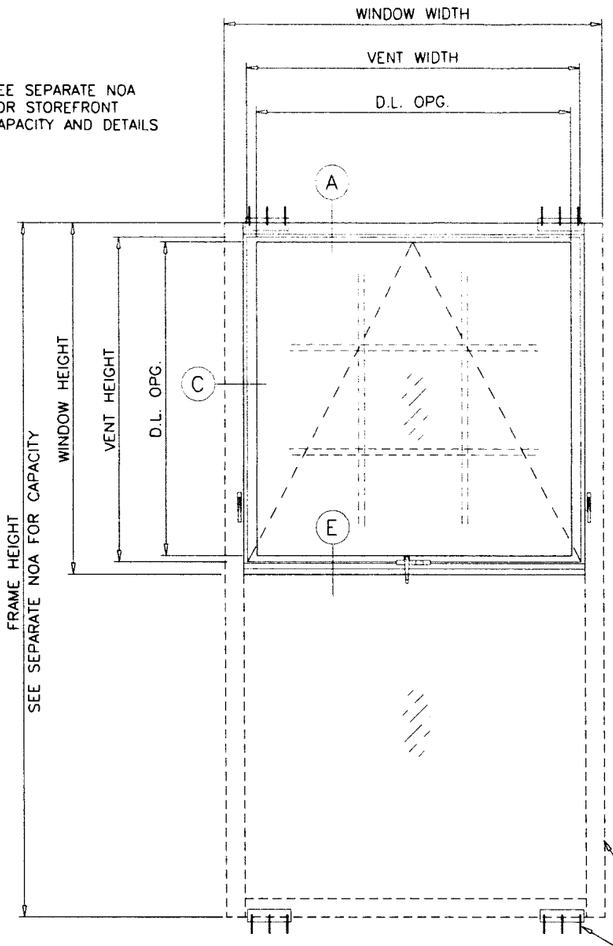


X/O

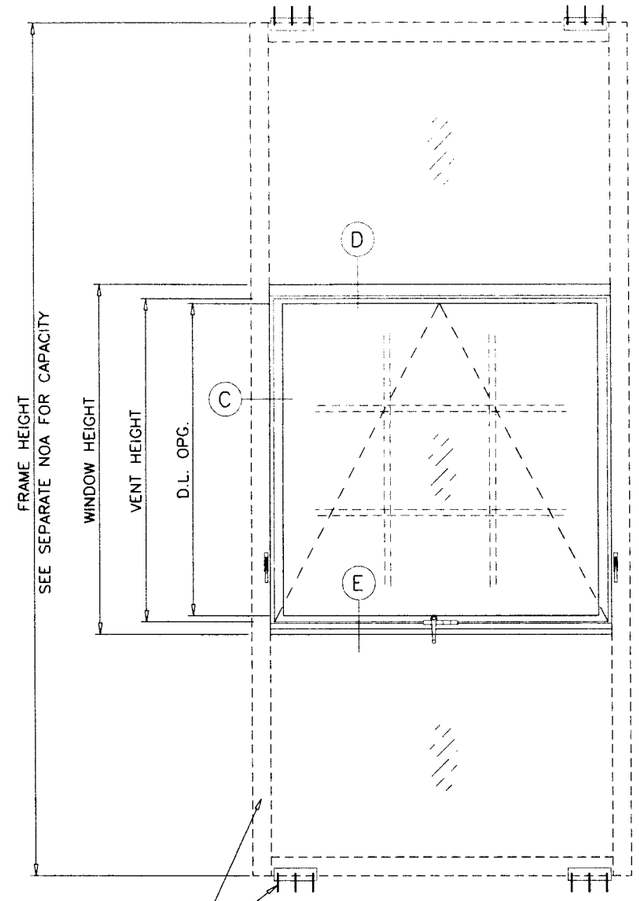


O/X/O

SEE SEPARATE NOA FOR HP3060 OR HP3070 WINDOW WALL SYSTEM DESIGN LOADS AND ANCHORS.

LOWER VALUES FROM PROJECTED WINDOW CAPACITY CHART OR WINDOW WALL SYSTEM NOA WILL APPLY TO ENTIRE SYSTEM.

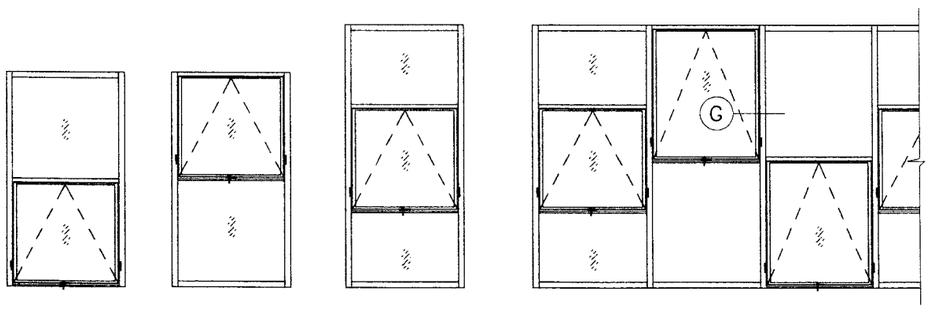


APPROVED CONFIGURATIONS

PRODUCT REVISED
as complying with the Florida
Building Code
Acceptance No 09-0722.09
Expiration Date 4.28.2010
By Rita Harris
Miami Dade Product Control
Division

Engr: ARSHAD VIQAR
CIVIL
FLA. PE # 38863
C.A.N. 3538

MAY 1 4 2009

**AL-FAROOQ CORPORATION**
ENGINEERS & PRODUCT DEVELOPMENT
1235 S.W. 87 AVE
MIAMI, FLORIDA 33174
TEL. (305) 264-8100 FAX. (305) 262-6978

STORE\W04-32RC

HP3060/3070 ALUM. PROJECTED WINDOW (S.M.I.)

**R.C. ALUMINUM INDUSTRIES INC.**
2805 N.W. 75 TH AVE.
MIAMI, FL. 33122
TEL. (305) 592-1515 FAX. (305) 592-2184

revisions:

| no | date | by | description |
|---|---|---|---|
| A | 05.10.05 | | NOTES REV. |
| B | 11.02.05 | | NO CHANGE THIS SHEET |
| C | 05.06.09 | | UPDATED FOR 2007 FBC |

date: 04-15-04
scale: 1/2"=1'-0"
dr. by: HAMID
chk. by:

drawing no.
W04-32

sheet 3 of 8

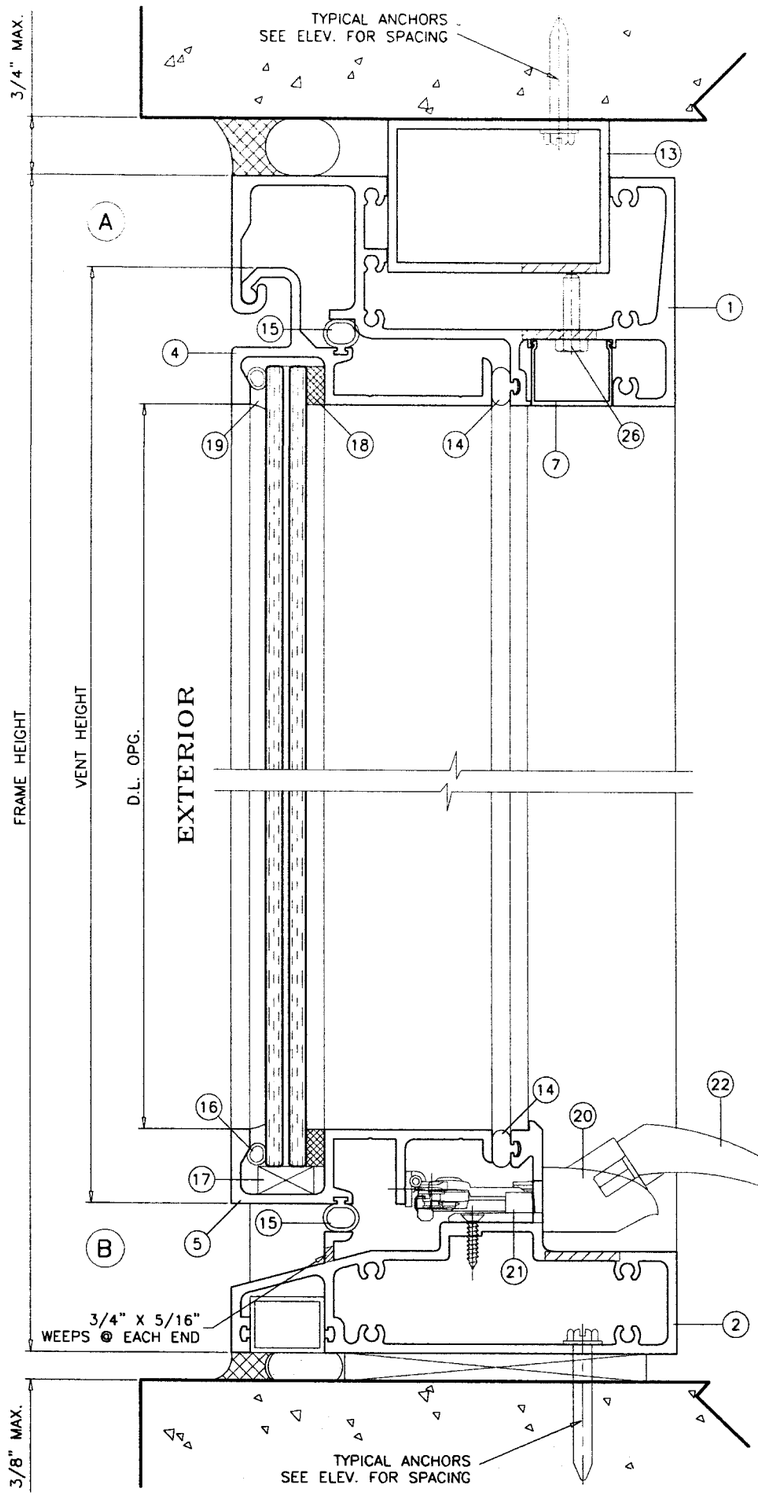


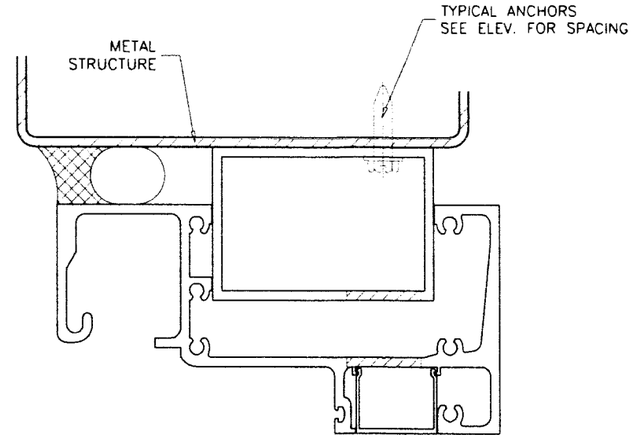


METAL STRUCTURES NOT BY RC ALUMINUM
MUST SUPPORT LOADS IMPOSED BY GLAZING SYSTEM AND TRANSFER THEM TO THE BUILDING STRUCTURE.

## TYPICAL ANCHORS: SEE ELEV. FOR SPACING

**1/4" HILTI KWIK-CON II** (Fu=163 KSI, Fy=157 KSI)

DIRECTLY INTO CONCRETE
1-1/4" MIN. EMBED INTO CONCRETE

**1/4" HILTI KWIK-FLEX SELF DRILLING SCREWS** (Fu=92 KSI, Fy=120 KSI)
INTO METAL STRUCTURES
STEEL : 1/8" THK. MIN. (Fy = 36 KSI MIN.)
ALUMINUM : 1/8" THK. MIN. (6063-T6 MIN.)
(STEEL IN CONTACT WITH ALUMINUM TO BE PLATED OR PAINTED)

**ANCHOR EDGE DISTANCES**
INTO CONCRETE = 2-1/2" MIN.
INTO METAL STRUCTURE = 3/4" MIN.

**CONCRETE f'c = 3000 PSI MIN.**
**MASONRY f'm = 1600 PSI MIN.**

## SEALANTS:

ALL FRAME CORNERS AND MULLION SEAMS SEALED WITH SILICONE.

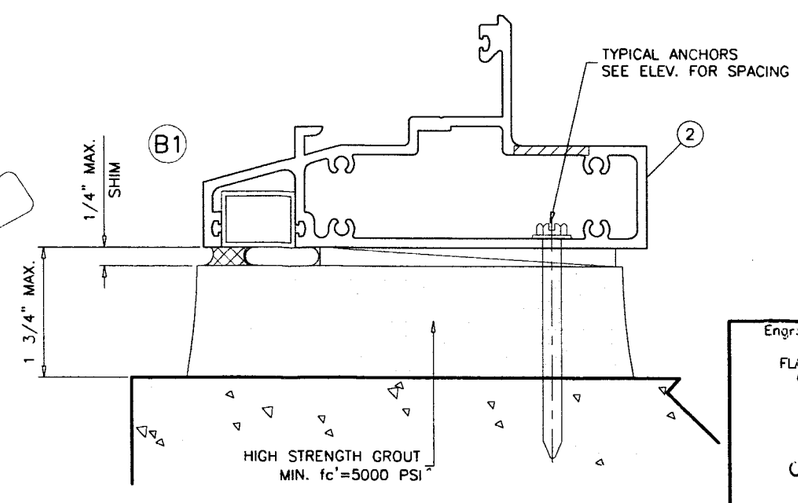


PRODUCT REVISED
as complying with the Florida Building Code
Acceptance No 09-0722.09
Expiration Date 4.28.2010
By Rudy Harris
Miami Dade Product Control Division

Engr: ARSHAD VIQAR
CIVIL
FLA. PE # 38863
C.A.N. 3538

MAY 14 2009


AL-FAROOQ CORPORATION
ENGINEERS & PRODUCT DEVELOPMENT
1235 S.W. 87 AVE
MIAMI, FLORIDA 33174
TEL. (305) 264-8100 FAX. (305) 262-6978


STORE\W04-32RC

HP3060/3070 ALUM. PROJECTED WINDOW (S.M.I.)


R.C. ALUMINUM INDUSTRIES INC.
2805 N.W. 75 TH AVE.
MIAMI, FL. 33122
TEL. (305) 592-1515 FAX. (305) 592-2184


revisions:

| no | date | by | description |
|---|---|---|---|
| A | 05.10.05 | | SHIMS REV. |
| B | 11.02.05 | | METAL EDGE DIST. ADDED |
| C | 05.06.09 | | UPDATED FOR 2007 FBC |

date: 04-15-04
scale: 1/2" = 1"
dr. by: HAMID
chk. by:

drawing no.
W04-32

| ITEM | PART # | QUANTITY | DESCRIPTION | MATERIAL | MANF./SUPPLIER/REMARKS |
|---|---|---|---|---|---|
| 1 | HP3060-049 | 1 | FRAME HEAD | 6063-T6 | - |
| 2 | HP3060-050 | 1 | FRAME SILL/ INTERMEDIATE SILL | 6063-T6 | - |
| 3 | HP3060-036 | 2 | WINDOW JAMB/STOREFRONT JAMB | 6063-T6 | - |
| 4 | HP3060-053 | 1 | VENT HEAD | 6063-T6 | - |
| 5 | HP3060-054 | 1 | VENT SILL | 6063-T6 | - |
| 6 | HP3060-069 | 2 | VENT JAMB | 6063-T6 | - |
| 7 | HP3060-055 | 1 | SNAP COVER HEAD | 6063-T6 | - |
| 8 | HP3060-056 | 2 | VENT JAMB ADAPTER | 6063-T6 | - |
| 9 | HP3060-063 | 1 | INTERMEDIATE HEAD | 6063-T6 | - |
| 11 | - | - | ALUM TUBE SHIM | - | 3/4 X 3/4 X 1/16" X 2-1/4" LONG |
| 12 | - | - | ALUM TUBE SHIM | - | 3/4 X 3/4 X 1/16" X 2-7/8" LONG |
| 13 | - | - | ALUM TUBE | - | 2 X 3 X 1/8" X 7" LONG |
| 14 | V-045 | AS REQD. | BULB W'STRIPPING | NEOPRENE | SPONGE |
| 15 | V-046 | AS REQD. | BULB W'STRIPPING | VINYL | - |
| 16 | - | - | 5/16" DIA. SPLINE | - | - |
| 17 | - | AS REQD. | SETTING BLOCKS AT 6" FROM ENDS | NEOPRENE | 1/4 X 3/4 X 4" LONG |
| 18 | V2100 | AS REQD. | GLAZING TAPE | FOAM | 1/4 X 1/2" SINGLE FACE, NORTON |
| 19 | 795 | AS REQD. | GLAZING COMPOUND | SILICONE | DOW CORNING |
| 20 | OP05-7540 | 1 | AWNING OPERATOR | - | - |
| 21 | OP05-8021 | 1 | OPERATOR SURFACE MOUNT BRACKET | - | - |
| 22 | OP05-7800 | 1 | CRANK HANDLE | - | - |
| 23 | LU08-7510 | 2 | LOCKING HANDLE | - | - |
| 24 | G2-HNDPLT-02 | - | LOCKING HANDLE PLATE | - | - |
| 25 | GT-555 | - | GUIDE HOUSING | - | - |
| 26 | - | AS REQD. | LEVELING SCREWS | - | 1/4-20 X 3/4" HH MS |
| 27 | #8 X 1-1/4" | - | F.H. SMS | ST. STEEL | - |
| 28 | #8 X 3/4" | - | F.H. SMS | ST. STEEL | - |
| 29 | #10 X 3/4" | 2/ JAMB | JAMB ADAPTER SCREWS | ST. STEEL | HEX H. SMS |
| 30 | #12 X 1-1/4" | - | FRAME/VENT ASSEMBLY SCREWS | ST. STEEL | HEX H. SMS |

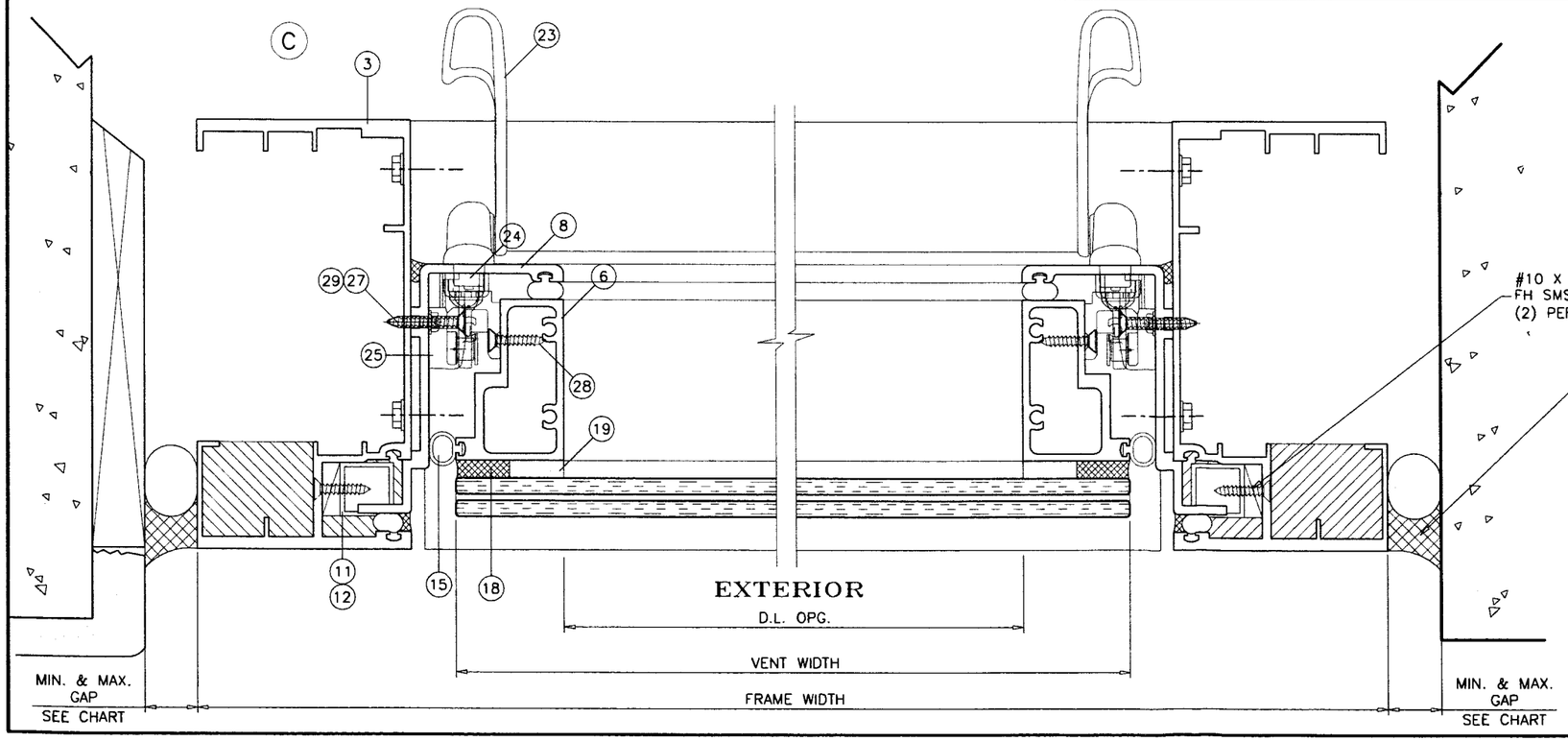


PRODUCT REVISED
as complying with the Florida
Building Code
Acceptance No 09-0722.09
Expiration Date 4.28.2010
By Sitty Harris
Miami Dade Product Control
Division

| MAX. FRAME HEIGHT | GAP | |
|---|---|---|
| | MIN. | MAX. |
| UPTO 126" | 3/8" | 3/4" |

Engr: ARSHAD VIQAR
CIVIL
FLA. PE # 38863
C.A.N. 3538

MAY 14 2009


AL-FAROOQ CORPORATION
ENGINEERS & PRODUCT DEVELOPMENT
1235 S.W. 87 AVE
MIAMI, FLORIDA 33174
TEL. (305) 264-8100 FAX. (305) 262-6978
STORE\W04-32RC


HP3060/3070 ALUM. PROJECTED WINDOW (S.M.I.)


R.C. ALUMINUM INDUSTRIES INC.
2805 N.W. 75 TH AVE.
MIAMI, FL. 33122
TEL. (305) 592-1515 FAX. (305) 592-2184


revisions:

| no | date | by | description |
|---|---|---|---|
| A | 05.10.05 | | VENT JAMB REV. |
| B | 11.02.05 | | NOTE ADDED |
| C | 05.06.09 | | UPDATED FOR 2007 FBC |

date: 04-15-04
scale: 1/2" = 1"
dr. by: HAMID
chk. by:

drawing no.
W04-32

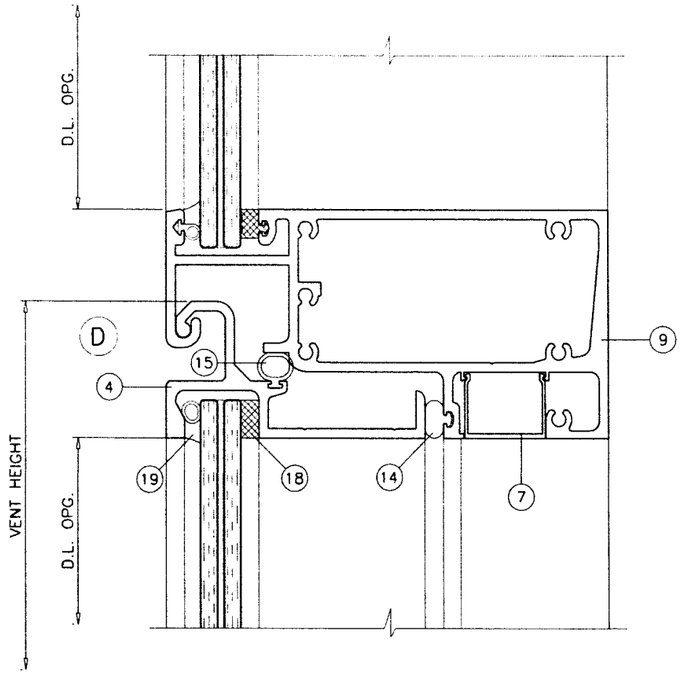


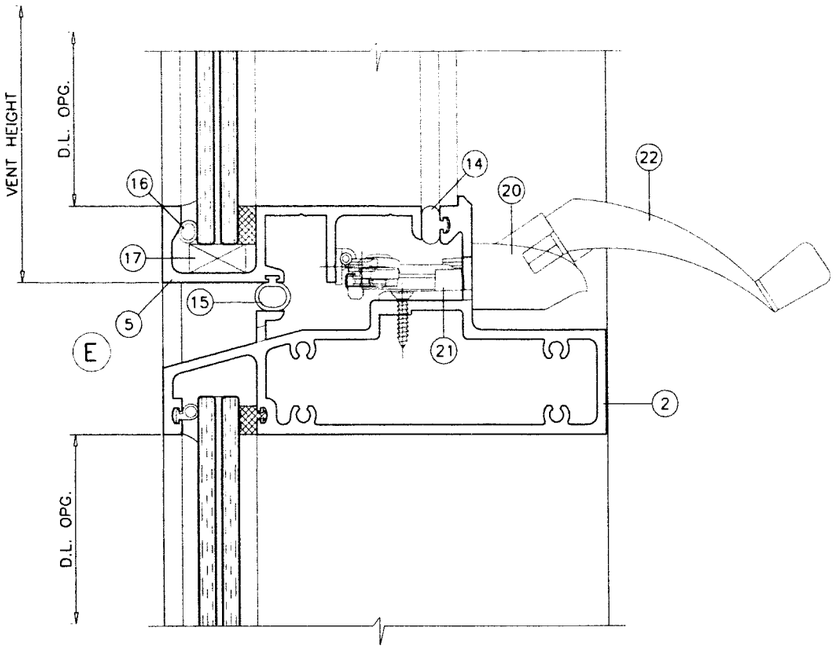


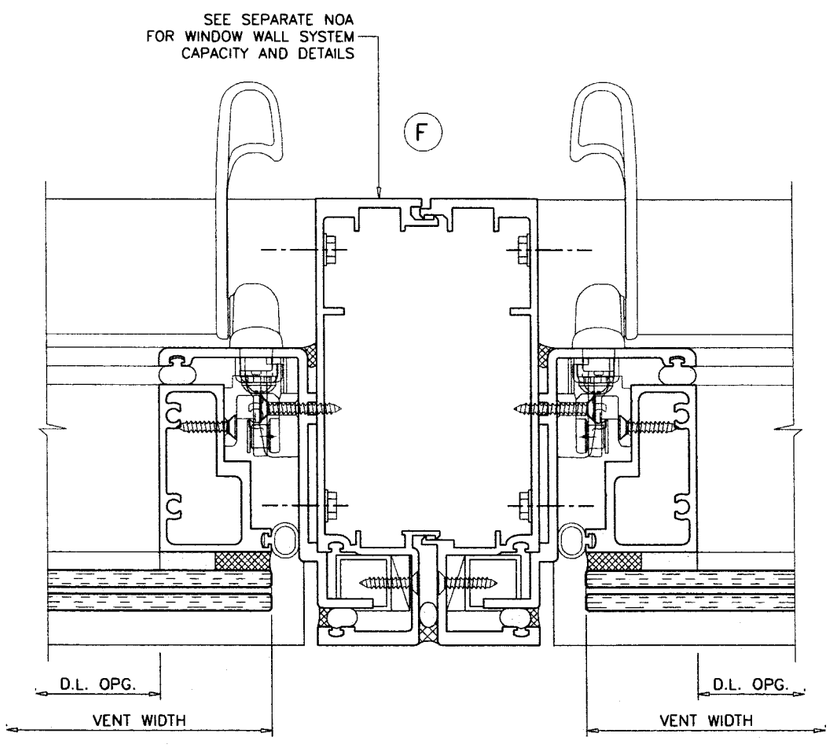


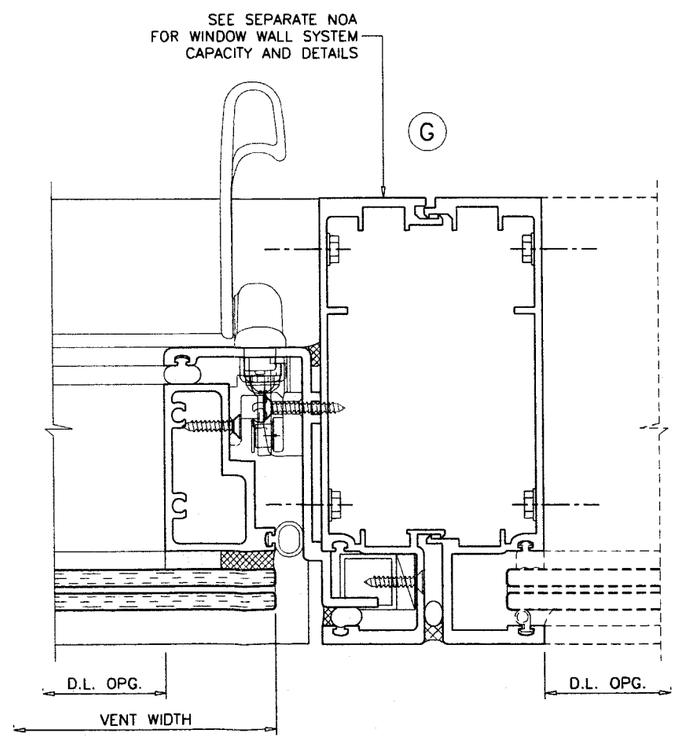


PRODUCT REVISED
as complying with the Florida
Building Code
Acceptance No 09-0722.09
Expiration Date 4-28-2010
By Erla Harris
Miami Dade Product Control
Division

Engr: ARSHAD VIQAR
CIVIL
FLA. PE # 38863
C.A.N. 3538

MAY 1 4 2009

HP3060/3070 ALUM. PROJECTED WINDOW (S.M.I.)

**R.C. ALUMINUM INDUSTRIES INC.**
2805 N.W. 75 TH AVE.
MIAMI, FL. 33122
TEL. (305) 592-1515 FAX. (305) 592-2184

**AL-FAROOQ CORPORATION**
ENGINEERS & PRODUCT DEVELOPMENT
1235 S.W. 87 AVE
MIAMI, FLORIDA 33174
TEL. (305) 264-8100 FAX. (305) 262-6978

STORE\W04-32RC

revisions:

| no | date | by | description |
|---|---|---|---|
| A | 05.10.05 | | VENT JAMB REV. |
| B | 11.02.05 | | NO CHANGE THIS SHEET |
| C | 05.06.09 | | UPDATED FOR 2007 FBC |

date: 04-15-04
scale: 1/2" = 1"
dr. by: HAMID
chk. by:

drawing no.
**W04-32**

sheet 6 of 8

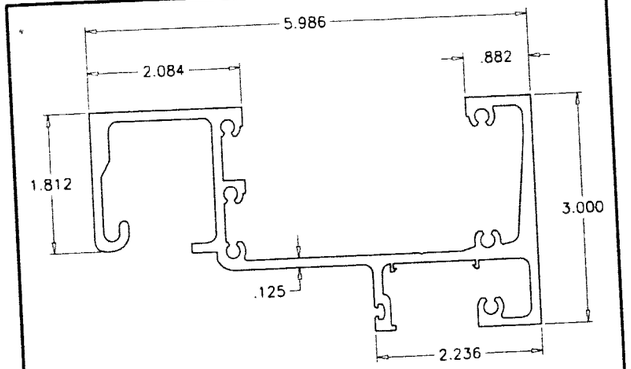


1 FRAME HEAD

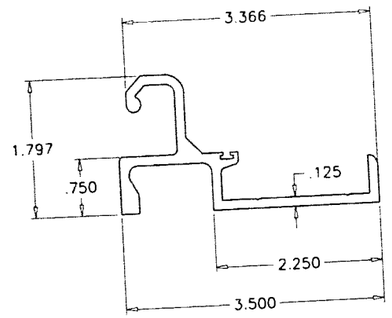


4 VENT HEAD

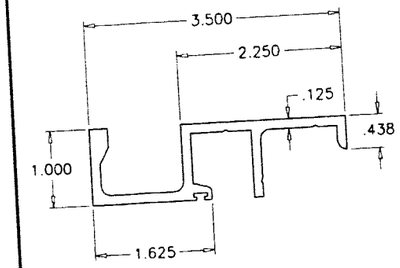


5 VENT SILL

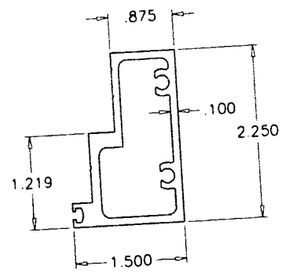


6 VENT JAMB

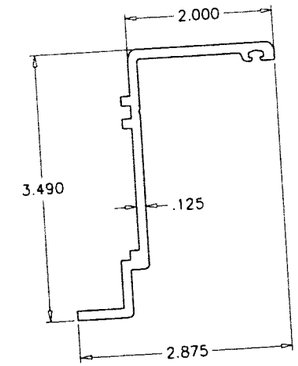


8 VENT JAMB ADAPTER

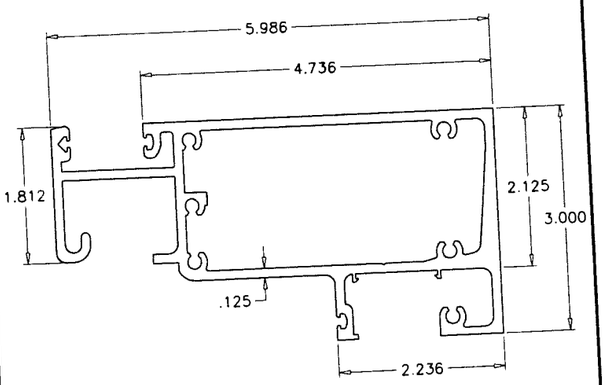


9 INTERMEDIATE HEAD

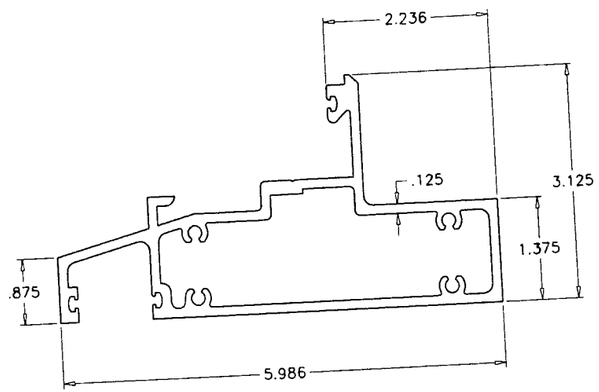


2 FRAME SILL/INTERMEDIATE SILL

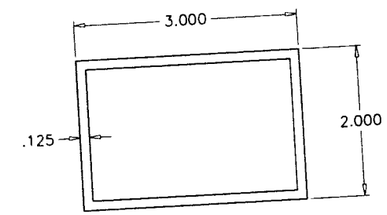


13 ALUMINUM TUBE

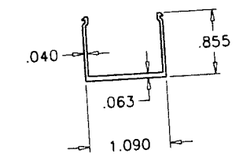


7 SNAP-IN COVER

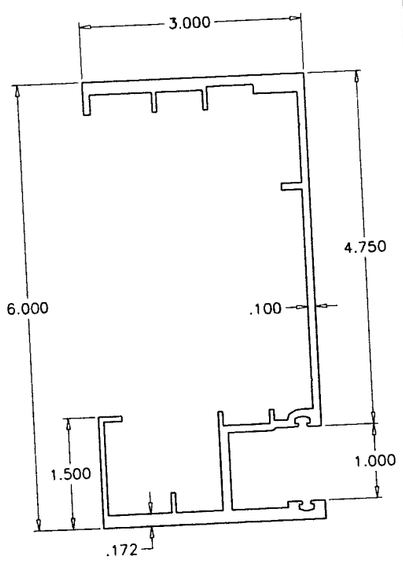


3 FRAME JAMB

PRODUCT REVISED
as complying with the Florida
Building Code
Acceptance No 09-0722.09
Expiration Date 4.28.2010
By
Miami Dade Product Control
Division

Engr: ARSHAD VIQAR
CIVIL
FLA. PE # 38863
C.A.N. 3538

MAY 1 4 2009


AL-FAROOQ CORPORATION
ENGINEERS & PRODUCT DEVELOPMENT
1235 S.W. 87 AVE
MIAMI, FLORIDA 33174
TEL. (305) 264-8100 FAX. (305) 262-6978
STORE\W04-32RC


HP3060/3070 ALUM. PROJECTED WINDOW (S.M.I.)


R.C. ALUMINUM INDUSTRIES INC.
2805 N.W. 75 TH AVE.
MIAMI, FL. 33122
TEL. (305) 592-1515 FAX. (305) 592-2184


revisions:

| no | date | by | description |
|---|---|---|---|
| A | 05.10.05 | | VENT JAMB REV. |
| B | 11.02.05 | | NO CHANGE THIS SHEET |
| C | 05.06.09 | | UPDATED FOR 2007 FBC |

date: 04-15-04
scale: 1/2" = 1"
dr. by: HAMID
chk. by:

drawing no.
W04-32

sheet 7 of 8

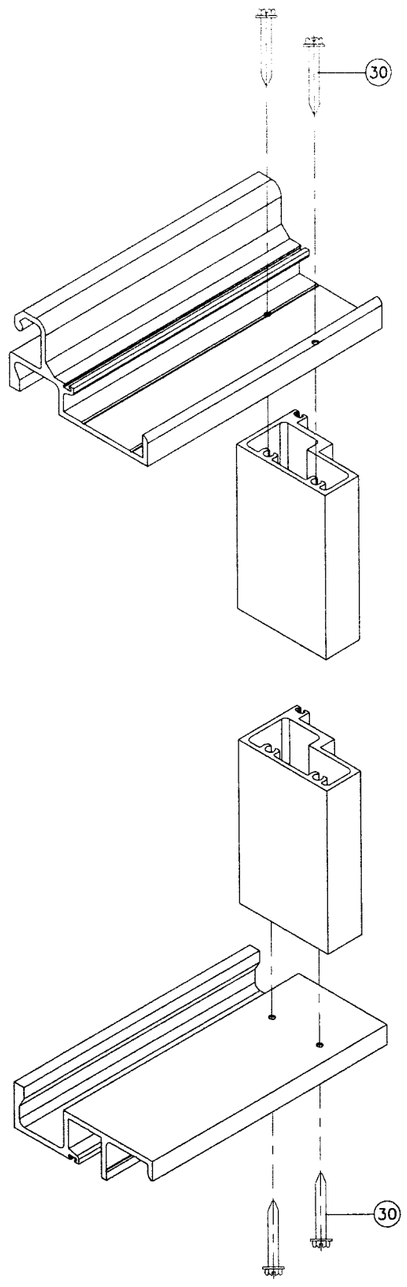


VENT CORNER

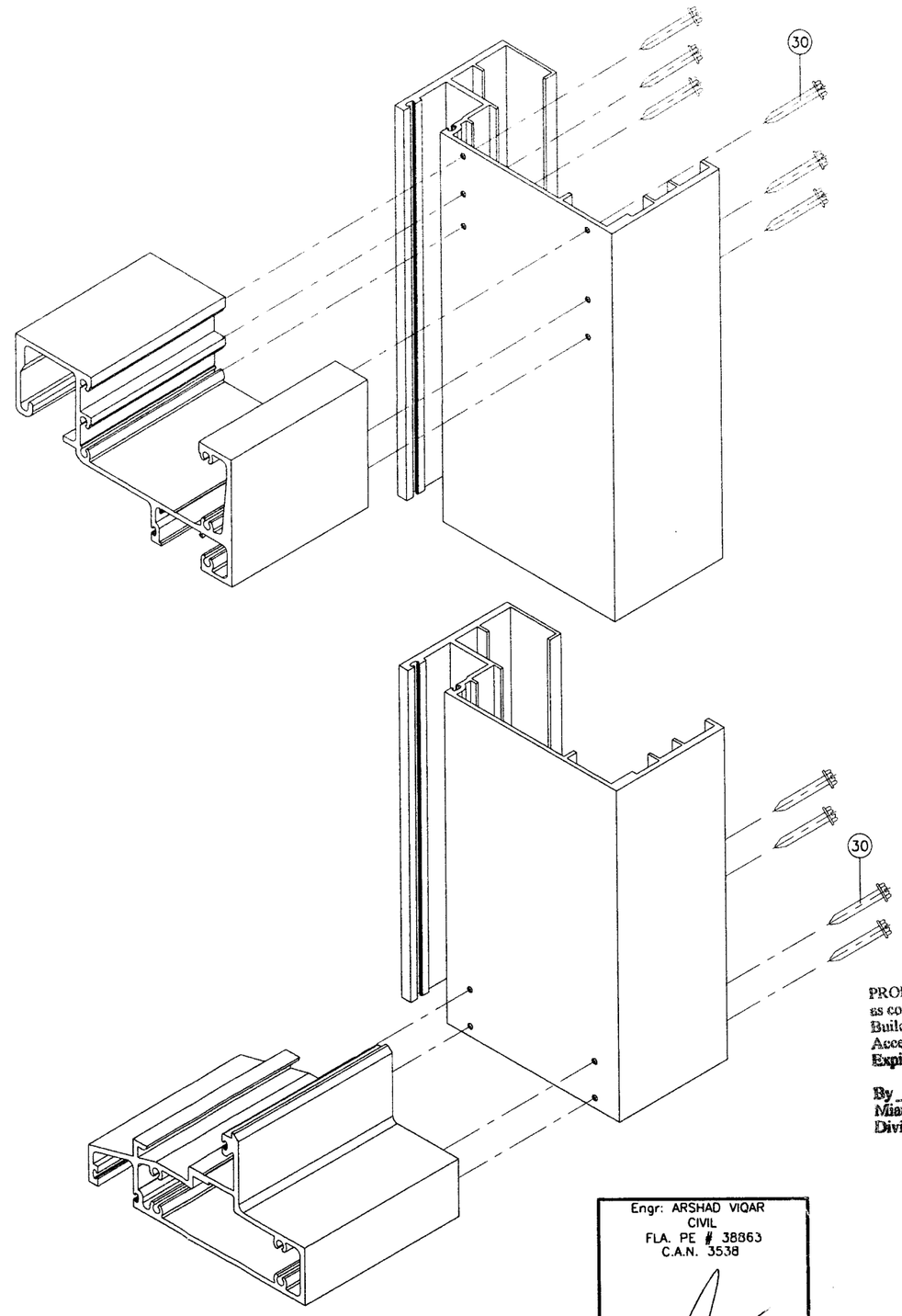


FRAME CORNER

PRODUCT REVISED
as complying with the F.
Building Code
Acceptance No 09-0722.09
Expiration Date 4.28.2010
By
Miami Dade Product Control
Division

Engr: ARSHAD VIQAR
CIVIL
FLA. PE # 38863
C.A.N. 3538

MAY 1 4 2009


AL-FAROOQ CORPORATION
ENGINEERS & PRODUCT DEVELOPMENT
1235 S.W. 87 AVE
MIAMI, FLORIDA 33174
TEL. (305) 264-8100 FAX. (305) 262-6978


STORE\W04-32RC

HP3060/3070 ALUM. PROJECTED WINDOW (S.M.I.)


R.C. ALUMINUM INDUSTRIES INC.
2805 N.W. 75 TH AVE.
MIAMI, FL. 33122
TEL. (305) 592-1515 FAX. (305) 592-2184


revisions:

| no | date | by | description |
|---|---|---|---|
| A | 05.10.05 | | VENT JAMB REV. |
| B | 11.02.05 | | NO CHANGE THIS SHEET |
| C | 05.06.09 | | UPDATED FOR 2007 FBC |

date: 04-15-04
scale: 1/2" = 1"
dr. by: HAMID
chk. by:

drawing no.
W04-32

sheet 8 of 8