MIAMI-DADE COUNTY, FLORIDA
METRO-DADE FLAGLER BUILDING
140 WEST FLAGLER STREET, SUITE 1603
MIAMI, FLORIDA 33130-1563
(305) 375-2901 FAX (305) 372-6339
www.miamidade.gov/buildingcode

BUILDING CODE COMPLIANCE OFFICE (BCCO)
PRODUCT CONTROL DIVISION

NOTICE OF ACCEPTANCE (NOA)

R. C. Aluminum Industries Inc.
2805 NW 75th Avenue
Miami, FL 33122

SCOPE:

This NOA is being issued under the applicable rules and regulations governing the use of construction materials. The documentation submitted has been reviewed by Miami-Dade County Product Control Division and accepted by the Board of Rules and Appeals (BORA) to be used in Miami Dade County and other areas where allowed by the Authority Having Jurisdiction (AHJ).

This NOA shall not be valid after the expiration date stated below. The Miami-Dade County Product Control Division (In Miami Dade County) and/or the AHJ (in areas other than Miami Dade County) reserve the right to have this product or material tested for quality assurance purposes. If this product or material fails to perform in the accepted manner, the manufacturer will incur the expense of such testing and the AHJ may immediately revoke, modify, or suspend the use of such product or material within their jurisdiction. BORA reserves the right to revoke this acceptance, if it is determined by Miami-Dade County Product Control Division that this product or material fails to meet the requirements of the applicable building code.

This product is approved as described herein, and has been designed to comply with the Florida Building Code, including the High Velocity Hurricane Zone.

DESCRIPTION: Series "HC200" Outswing Aluminum Casement Window – S.M.I.

APPROVAL DOCUMENT: Drawing No. **W05-18,** titled "Series HC 200 Aluminum Casement Wdw. (S.M.I.)", sheets 1 through 5 of 5, dated 04/08/05, with revision "C" dated 06/23/09, prepared by Al-Farooq Corporation, signed and sealed by Arshad Viqar, P.E, bearing the Miami-Dade County Product Control Revision stamp with the Notice of Acceptance number and expiration date by the Miami-Dade County Product Control Division.

MISSILE IMPACT RATING: Small Missile Impact Resistant

LABELING: Each unit shall bear a permanent label with the manufacturer's name or logo, city, state and following statement: "Miami-Dade County Product Control Approved", unless otherwise noted herein.

RENEWAL of this NOA shall be considered after a renewal application has been filed and there has been no change in the applicable building code negatively affecting the performance of this product.

TERMINATION of this NOA will occur after the expiration date or if there has been a revision or change in the materials, use, and/or manufacture of the product or process. Misuse of this NOA as an endorsement of any product, for sales, advertising or any other purposes shall automatically terminate this NOA. Failure to comply with any section of this NOA shall be cause for termination and removal of NOA.

ADVERTISEMENT: The NOA number preceded by the words Miami-Dade County, Florida, and followed by the expiration date may be displayed in advertising literature. If any portion of the NOA is displayed, then it shall be done in its entirety.

INSPECTION: A copy of this entire NOA shall be provided to the user by the manufacturer or its distributors and shall be available for inspection at the job site at the request of the Building Official.

This NOA **revises NOA # 07-1019.05** and consists of this page 1 and evidence pages E-1 and E-2, as well as approval document mentioned above.

The submitted documentation was reviewed by **Fitz A. Harris, P.E.**

Fitz A. Harris

MIAMI-DADE COUNTY APPROVED

NOA No. 09-0722.12
Expiration Date: June 30, 2010
Approval Date: October 14, 2009

R. C. Aluminum Industries Inc.

NOTICE OF ACCEPTANCE: EVIDENCE SUBMITTED

A. DRAWINGS

1. Manufacturer's die drawings and sections.

2. Drawing No **W05-18**, titled "Series HC 200 Aluminum Casement Wdw. (S.M.I.)", sheets 1 through 5 of 5, dated 04/08/05, with revision "B" dated 01/24/08, prepared by Al-Farooq Corporation, signed and sealed by Humayoun Farooq, P.E.

B. TESTS

1. Test reports on: 1) Small Missile Impact Test per FBC, TAS 201-94
2) Cyclic Wind Pressure Loading per FBC, TAS 203-94
along with marked-up drawings and installation diagram of an aluminum outswing casement window, prepared by prepared by Fenestration Testing Laboratory, Test Report No. **FTL-4571,** dated 03/17/05, signed and sealed by Edmundo Largaespada, P.E. ***"Submitted under NOA# 05-0427.01"***

2. Test reports on: 1) Air Infiltration Test, per FBC, TAS 202-94
2) Uniform Static Air Pressure Test, Loading per FBC, TAS 202-94
3) Water Resistance Test, per FBC, TAS 202-94
4) Small Missile Impact Test per FBC, TAS 201-94
5) Cyclic Wind Pressure Loading per FBC, TAS 203-94
6) Forced Entry Test, per FBC 2411 3.2.1 and TAS 202-94
along with marked-up drawings and installation diagram of an aluminum outswing casement window, prepared by Fenestration Testing Laboratory, Test Report No. **FTL-4433,** dated 02/02/05, witnessed by Edmundo Largaespada, P.E. ***"Submitted under NOA# 05-0427.01"***

3. Test reports on: 1) Small Missile Impact Test per FBC, TAS 201-94
2) Cyclic Wind Pressure Loading per FBC, TAS 203-94
along with marked-up drawings and installation diagram of an aluminum outswing casement window, prepared by prepared by Fenestration Testing Laboratory, Test Report No. **FTL-4509,** dated 02/02/05, signed and sealed by Edmundo Largaespada, P.E. ***"Submitted under NOA# 05-0427.01"***

4. Test reports on: 1) Air Infiltration Test, per FBC, TAS 202-94
2) Uniform Static Air Pressure Test, Loading per FBC, TAS 202-94
3) Water Resistance Test, per FBC, TAS 202-94
4) Small Missile Impact Test per FBC, TAS 201-94
5) Cyclic Wind Pressure Loading per FBC, TAS 203-94
6) Forced Entry Test, per FBC 2411 3.2.1 and TAS 202-94
along with marked-up drawings and installation diagram of an aluminum outswing casement window, prepared by prepared by Fenestration Testing Laboratory, Test Report No. **FTL-4415,** dated 12/09/04, signed and sealed by Edmundo Largaespada, P.E. ***"Submitted under NOA# 05-0427.01"***

NOTICE OF ACCEPTANCE: EVIDENCE SUBMITTED

C. CALCULATIONS

1. Anchor verification calculations and structural analysis, complying with FBC-20047, dated 06/19/09, prepared by Al-Farooq Corporation, signed and sealed by Arshad Viqar, P.E.
   Complies with ASTM E1300-02/04

D. QUALITY ASSURANCE

1. Miami Dade Building Code Compliance Office (BCCO).

E. MATERIAL CERTIFICATIONS

1. Notice of Acceptance No. **05-1208.02** issued to E.I. DuPont DeNemours & CO., Inc. for "**DuPont Butacite PVB Interlayer.**" dated January 05, 2006, expiring on December 11, 2010.

F. STATEMENTS

1. Statement letter of conformance and no financial interest, dated 06/19/09, signed and sealed by Arshad Viqar, P.E.
2. Letter from the new engineer Arshad Viqar, P.E. dated 06/25/09 stating that he is the engineer assuming the work performed by the previous engineer Humayoun Farooq, P.E.

G. OTHER

1. Notice of Acceptance No. **07-1019.05**, issued to R. C. Aluminum Industries Inc. for their "Series "HC200" Aluminum **Casement Window - S.M.I.**", approved on 06/30/05 and expiring on 06/30/10.

DESIGN LOAD CAPACITY - PSF			
WINDOW DIMS.		(X) SIZES	
WIDTH	HEIGHT	EXT.(+)	INT.(-)
20"	36"	130.0	210.0
24"		130.0	210.0
28"		130.0	210.0
32"		130.0	165.0
36"		130.0	165.0
40"		130.0	165.0
42"		130.0	165.0
20"	42"	130.0	210.0
24"		130.0	210.0
28"		130.0	165.0
32"		130.0	165.0
36"		130.0	165.0
40"		130.0	165.0
42"		130.0	165.0
20"	48"	130.0	210.0
24"		130.0	165.0
28"		130.0	165.0
32"		130.0	165.0
36"		130.0	165.0
40"		130.0	165.0
42"		130.0	165.0
20"	54"	130.0	165.0
24"		130.0	165.0
28"		130.0	165.0
32"		130.0	165.0
36"		130.0	165.0
40"		130.0	165.0
42"		130.0	165.0
20"	60"	130.0	165.0
24"		130.0	165.0
28"		130.0	165.0
32"		130.0	165.0
36"		130.0	165.0
40"		130.0	150.0
42"		130.0	150.0
20"	66"	130.0	165.0
24"		130.0	165.0
28"		130.0	165.0
32"		130.0	165.0
36"		130.0	150.0
40"		130.0	150.0
42"		130.0	150.0
20"	72"	130.0	165.0
24"		130.0	165.0
28"		130.0	165.0
32"		130.0	165.0
36"		130.0	150.0
40"		130.0	150.0
42"		130.0	150.0

DESIGN LOAD CAPACITY - PSF			
WINDOW DIMS.		(X) SIZES	
WIDTH	HEIGHT	EXT.(+)	INT.(-)
20"	78"	130.0	165.0
24"		130.0	165.0
28"		130.0	165.0
32"		130.0	150.0
36"		130.0	150.0
40"		124.0	143.0
20"	84"	130.0	165.0
24"		130.0	165.0
28"		130.0	150.0
32"		118.0	136.2
36"		106.6	123.0

NOTE:
GLASS CAPACITIES ON THIS SHEET ARE BASED ON ASTM E1300-02/04 (3 SEC. GUSTS) AND FLORIDA BUILDING COMMISSION DECLARATORY STATEMENT DCA05-DEC-219

DESIGN LOAD CAPACITY - PSF			
WINDOW DIMS.		(X) SIZES	
WIDTH	HEIGHT	EXT.(+)	INT.(-)
19-1/8"	26"	130.0	210.0
26-1/2"		130.0	210.0
37"		130.0	210.0
42"		130.0	165.0
19-1/8"	38-3/8"	130.0	210.0
26-1/2"		130.0	210.0
37"		130.0	165.0
42"		130.0	165.0
19-1/8"	50-5/8"	130.0	210.0
26-1/2"		130.0	165.0
37"		130.0	165.0
42"		130.0	165.0
19-1/8"	63"	130.0	165.0
26-1/2"		130.0	165.0
37"		130.0	165.0
42"		130.0	150.0
19-1/8"	76"	130.0	165.0
26-1/2"		130.0	165.0
37"		130.0	150.0
42"		130.0	150.0

EXTERIOR

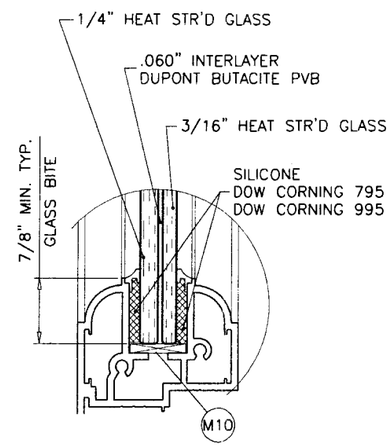

GLAZING DETAIL

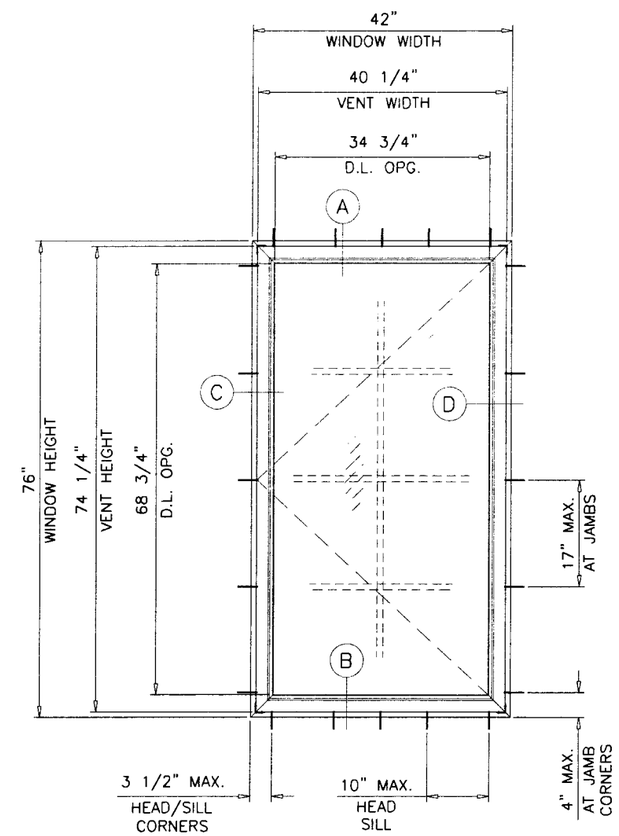

TYPICAL ELEVATION

SERIES HC200 ALUMINUM CASEMENT WINDOW

DESIGN LOAD RATING FOR THESE WINDOWS TO BE AS PER CHARTS SHOWN ABOVE.

APPROVAL APPLIES TO SINGLE UNITS OR SIDE BY SIDE COMBINATIONS OF CASEMENT/CASEMENT OR CASEMENT WITH OTHER MIAMI-DADE COUNTY APPR'D WINDOWS USING MIAMI-DADE COUNTY APPROVED MULLIONS IN BETWEEN.
LOWER DESIGN PRESSURE FROM WINDOWS OR MULLION APPROVAL WILL APPLY TO ENTIRE SYSTEM.

THIS PRODUCT HAS BEEN DESIGNED AND TESTED TO COMPLY WITH THE REQUIREMENTS OF THE FLORIDA BUILDING CODE 2007 EDITION INCLUDING HIGH VELOCITY HURRICANE ZONE (HVHZ).

WOOD BUCKS BY OTHERS, MUST BE ANCHORED PROPERLY TO TRANSFER LOADS TO THE STRUCTURE.

ANCHORS SHALL BE AS LISTED, SPACED AS SHOWN ON DETAILS, ANCHORS EMBEDMENT TO BASE MATERIAL SHALL BE BEYOND WALL DRESSING OR STUCCO.

ANCHORING OR LOADING CONDITIONS NOT SHOWN IN THESE DETAILS ARE NOT PART OF THIS APPROVAL.

A LOAD DURATION INCREASE IS USED IN DESIGN OF ANCHORS INTO WOOD ONLY.

MATERIALS INCLUDING BUT NOT LIMITED TO STEEL/METAL SCREWS, THAT COME INTO CONTACT WITH OTHER DISSIMILAR MATERIALS SHALL MEET THE REQUIREMENTS OF 2007 FLORIDA BLDG. CODE SECTION 2003.8.4.

THESE WINDOWS ARE RATED FOR SMALL MISSILE IMPACT.
MIAMI-DADE COUNTY APPROVED IMPACT RESISTANT SHUTTERS REQUIRED FOR INSTALLATIONS UP TO 30 FT. OF GRADE.
SHUTTERS NOT REQD. FOR INSTALLATIONS ABOVE 30 FT. OF GRADE.

Engr: ARSHAD VIQAR
CIVIL
FLA. PE # 38863
C.A.N. 3538

JUN 26 2009

PRODUCT REVISED
as complying with the Florida Building Code
Acceptance No 09-0722.12
Expiration Date 06.30.2010
By
Miami Dade Product Control Division

AL-FAROOQ CORPORATION
ENGINEERS & PRODUCT DEVELOPMENT
1235 S.W. 87 AVE
MIAMI, FLORIDA 33174
TEL. (305) 264-8100 FAX. (305) 262-6978
COMP-ANL\W05-18RC

R.C. ALUMINUM INDUSTRIES INC.
2805 N.W. 75 TH AVE.
MIAMI, FL. 33122
TEL. (305) 592-1515 FAX. (305) 592-2184

SERIES HC200 ALUMINUM CASEMENT WDW. (S.M.I.)

revisions:

no	date	by	description
A	06.15.07		UPDATED FOR 2004 FBC
B	01.24.08		REV. PER BCCO COMMENTS
C	06.23.09		UPDATED FOR 2007 FBC

date: 04-08-05
scale: 1/2"=1'-0"
dr. by: HAMID
chk. by:

drawing no.
W05-18

sheet 1 of 5

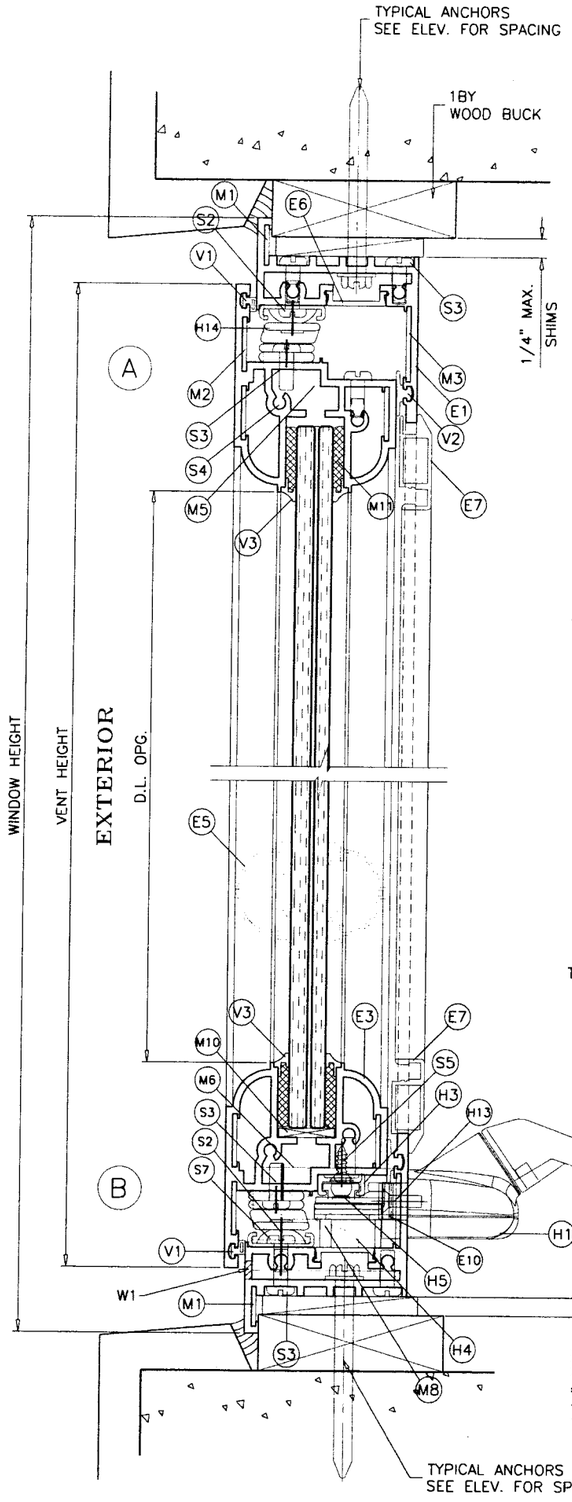

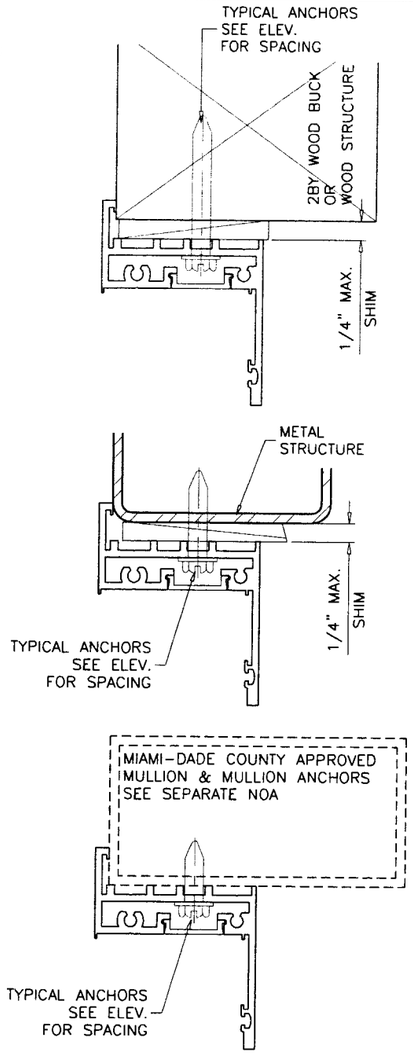

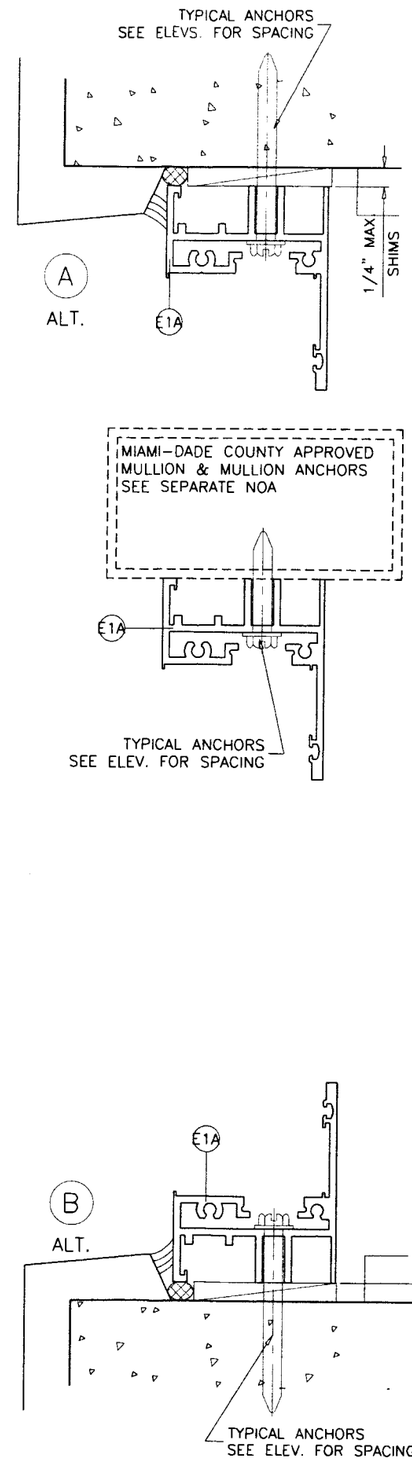

WOOD BUCKS AND METAL STRUCTURE NOT BY RC ALUMINUM MUST SUSTAIN LOADS IMPOSED BY GLAZING SYSTEM AND TRANSFER THEM TO THE BUILDING STRUCTURE.

TYPICAL ANCHORS: SEE ELEV. FOR SPACING

1/4" HILTI KWIK-CON II (Fu=163 KSI, Fy=157 KSI)

INTO 2BY WOOD BUCKS OR WOOD STRUCTURES
1-1/2" MIN. PENETRATION INTO WOOD

THRU 1BY BUCKS INTO CONC. OR MASONRY
1-1/4" MIN. EMBED INTO CONC. OR MASONRY

DIRECTLY INTO CONC. OR MASONRY
1-1/4" MIN. EMBED INTO CONC. OR MASONRY

#14 SMS OR SELF DRILLING SCREWS (GRADE 2 CRS)
INTO METAL STRUCTURES

STEEL : 12 GA. MIN. (Fy = 36 KSI MIN.)
ALUMINUM : 1/8" THK. MIN. (6063-T5 MIN.)
(STEEL IN CONTACT WITH ALUMINUM TO BE PLATED OR PAINTED)

#14 SMS OR SELF DRILLING SCREWS (GRADE 2 CRS)

INTO MIAMI-DADE COUNTY APPROVED MULLIONS (MIN. THK. = .090")
(NO SHIM SPACE)

ANCHOR EDGE DISTANCES

INTO CONCRETE AND MASONRY = 2-3/4" MIN.
INTO WOOD STRUCTURE = 1" MIN.
INTO METAL STRUCTURE = 3/4" MIN.

CONCRETE f'c = 3000 PSI MIN.
C-90 HOLLOW/FILLED BLOCK f'm = 2000 PSI MIN.

SEALANTS:

ALL FRAME AND VENT CORNERS SEALED WITH SILICONE.

WEEP HOLES:

W1 = 1/4" X 1/2" WEEP SLOT AT 4" FROM EACH END

Engr: ARSHAD VIQAR
CIVIL
FLA. PE # 38863
C.A.N. 3538

JUN 26 2009

PRODUCT REVISED
as complying with the Florida
Building Code
Acceptance No 09-0722.12
Expiration Date 6.30.2010
By Sidy Harris
Miami Dade Product Control
Division

AL-FAROOQ CORPORATION
ENGINEERS & PRODUCT DEVELOPMENT
1235 S.W. 87 AVE
MIAMI, FLORIDA 33174
TEL. (305) 264-8100 FAX. (305) 262-6978

COMP-ANL\W05-18RC

SERIES HC200 ALUMINUM CASEMENT WDW. (S.M.I.)

R.C. ALUMINUM INDUSTRIES INC.
2805 N.W. 75 TH AVE.
MIAMI, FL. 33122
TEL. (305) 592-1515 FAX. (305) 592-2184

revisions:

no	date	by	description
A	06.15.07		UPDATED FOR 2004 FBC
B	01.24.08		REV. PER BCCO COMMENTS
C	06.23.09		UPDATED FOR 2007 FBC

date: 04-08-05
scale: 1/2" = 1"
dr. by: HAMID
chk. by:

drawing no.
W05-18

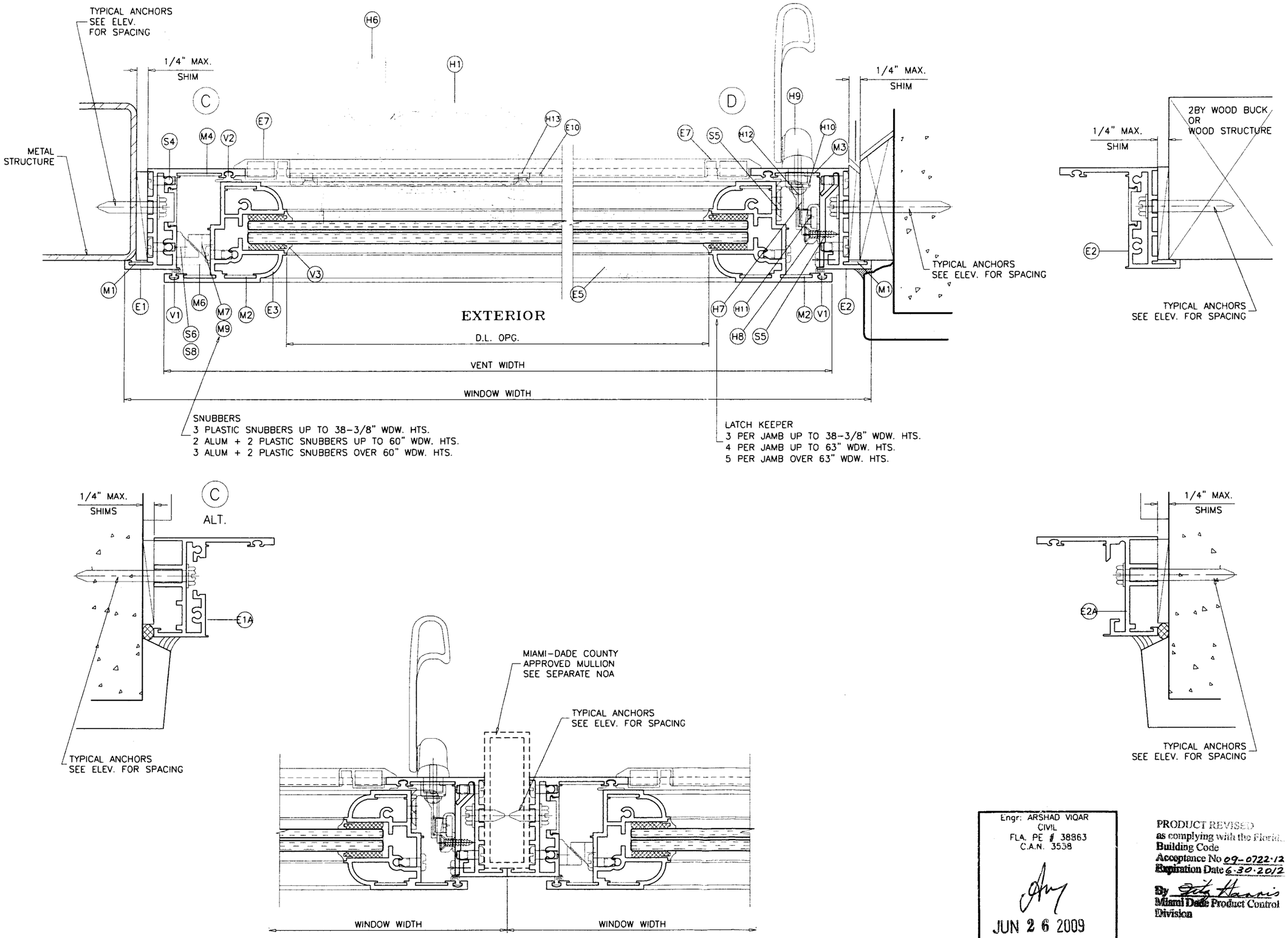

Engr: ARSHAD VIQAR
CIVIL
FLA. PE # 38863
C.A.N. 3538

JUN 26 2009

PRODUCT REVISED
as complying with the Florida
Building Code
Acceptance No 09-0722.12
Expiration Date 6.30.2012
By [signature]
Miami Dade Product Control
Division

AL-FAROOQ CORPORATION
ENGINEERS & PRODUCT DEVELOPMENT
1235 S.W. 87 AVE
MIAMI, FLORIDA 33174
TEL. (305) 264-8100 FAX. (305) 262-6978
COMP-ANL\W05-18RC

SERIES HC200 ALUMINUM CASEMENT WDW. (S.M.I.)

R.C. ALUMINUM INDUSTRIES INC.
2805 N.W. 75 TH AVE.
MIAMI, FL. 33122
TEL. (305) 592-1515 FAX. (305) 592-2184

revisions:

no	date	by	description
A	06.15.07		UPDATED FOR 2004 FBC
B	01.24.08		REV. PER BCCO COMMENTS
C	06.23.09		UPDATED FOR 2007 FBC

date: 04-08-05
scale: 1/2" = 1"
dr. by: HAMID
chk. by:

drawing no.
W05-18

sheet 3 of 5

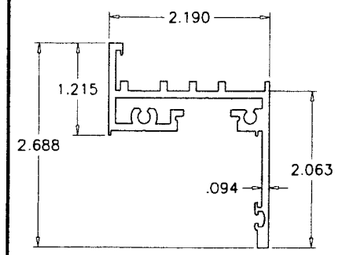

(E1) FLANGE FRAME
TOP/BOTTOM/JAMB

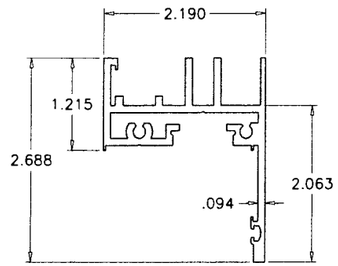

(E1A) FLUSH FRAME
TOP/BOTTOM/JAMB

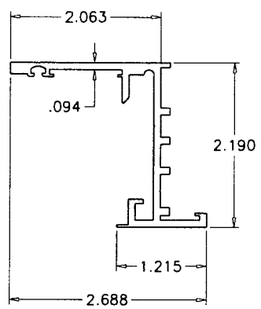

(E2) FLANGE FRAME
LOCK JAMB

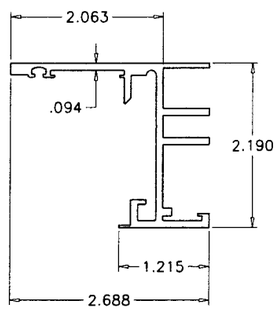

(E2A) FLANGE FRAME
LOCK JAMB

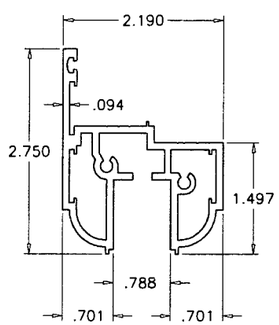

(E3) VENT (LAM. GLASS)
TOP/BOTTOM/JAMB

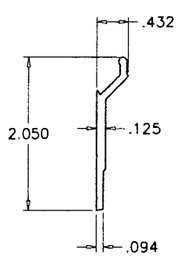

(E4) LOCKING HOLDER HOOK

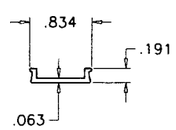

(E6) SNAP COVER

ITEM	PART #	QUANTITY	DESCRIPTION	MATERIAL	MANF./SUPPLIER/REMARKS
E1	HC200-001	3/ WDW.	FLANGE FRAME TOP , BOTTOM & JAMB (NON LOCK)	6063-T6	-
E1A	HC200-008	3/ WDW.	FLUSH FRAME TOP , BOTTOM & JAMB (NON LOCK)	6063-T6	-
E2	HC200-002	1/ WDW.	FLANGE FRAME LOCK JAMB	6063-T6	-
E2A	HC200-009	1/ WDW.	FLUSH FRAME LOCK JAMB	6063-T6	-
E3	HC200-003	4/ WDW.	VENT TOP , BOTTOM & JAMBS (LAM. GLASS)	6063-T6	-
E4	HC200-004	1/ WDW.	LOCKING HOLDER HOOK	6063-T6	-
E5	HC200-005	AS REQD.	OPTIONAL MUNTIN	ALUMINUM	-
E6	BD4500-015	4/ WDW.	SNAP COVER (OPTIONAL)	ALUMINUM	-
E7	1/ WDW.	-	SCREEN (OPTIONAL)	ALUMINUM	-
E10	CM100-022	-	ANCHOR ARM FOR ROTO OPERATOR	-	-
V1	V-059	AS REQD.	EXTERIOR W/STP. VINYL	PVC	-
V2	V-033A	AS REQD.	TR-5804N COMPRESSION GASKET (INSIDE)	NEOPRENE	TREMCO
V3	P-021 (OPTIONAL)	AS REQD.	COSMETIC COVER SEAL MELTPOINT	-	-
M1	HC200-M01	1/ CORNER	FRAME SMALL CORNER LOCK	ST. STEEL	16 GA.
M2	HC200-M02	3/ CORNER	VENT CORNER LOCK	ST. STEEL	16 GA.
M3	HC200-M03	1/ CORNER	FRAME LARGE CORNER LOCK	ST. STEEL	16 GA.
M4	HC200-M04	1	FRAME LARGE CORNER LOCK (AT ROTO OPERATOR ONLY)	ST. STEEL	16 GA.
M5	HC200-M05	1/ CORNER	LEFT HAND FRAME CORNER LOCK	6063-T6	-
M6	HC200-M06	1/ CORNER	RIGHT HAND FRAME CORNER LOCK	6063-T6	-
M7	HC200-M07	-	ALUMINUM SNUBBER	-	-
M8	P-030	-	NYLON CAM	-	-
M9	P#12206	-	NYLON SNUBBERS	-	-
M10		AS REQD.	1/8"X3/4" SETTING BLOCK	NEOPRENE	-
M12	HC200-M08	-	GUIDE HOUSING	ALUMINUM	-
M13	P-031	-	SHIM ANTI FRICTION	PLASTIC	-
H1	CD25	-	9.5" SINGLE ARM OPERATOR	ST/ST	ROTO HARDWARE
H3	CB304	1/ WDW.	SURFACE MOUNT OPERATOR	-	ROTO HARDWARE
H4	CB253	1	8.5 MM. OPERATOR BOTTOM SPACER	-	ROTO HARDWARE
H5	CB201	1	OPERATOR TOP SPACER	-	ROTO HARDWARE
H7	L1305-2111	3	KEEPERS	ST/ST	ROTO HARDWARE
H8	GT553	-	GUIDE HOUSING	-	ROTO HARDWARE
H9	LH088-7510	-	WHITE HANDLE	-	ROTO HARDWARE
H10	G2-HND-LPLT-02	-	HANDLE FASTENER PLATE	-	ROTO HARDWARE
H11	LB06	1	LOCK POINT STAINLESS STEEL	-	ROTO HARDWARE
H12	GT990	-	#10-32X 3/8" LG. PH. MACHINE SCREW (LOCKING HANDLE)	ST/ST	-
H13	M1000	-	#8-32X 3/4" LG. PHL. FH. THREAD CUTTING (ANCHOR ARM)	ST/ST	-
H14		2	4 BAR HINGE	-	TRUTH OR BRONZE CRAFT
S2		-	#10 X 3/8" LG. PH. PHL. SMS. (ARM-FRAME)	ST/ST	-
S3		-	#10 X 1/2" LG. PH. PHL. SMS. (ARM-VENT)	ST/ST	-
S4		-	#10 X 1-1/2" LG. PH. PHL. SMS. (ASSEMBLY)	ST/ST	-
S5		-	#8-32 X 1/2" LG. FH. PHL. (GUIDES-SURFACE MOUNT)	ST/ST	-
S6		-	#6 X 1/2" LG. FH. PHL. SMS. (SNUBBERS)	ST/ST	-
S7		-	#10 X 1/2" LG. PHL. FH. SMS.	ST/ST	-
S8		-	#6 X 1/2" LG. PH. SMS. ST/ST AT ALUM. SNUBBER	-	-

Engr: ARSHAD VIQAR
CIVIL
FLA. PE # 38863
C.A.N. 3538

JUN 26 2009

PRODUCT REVISED
as complying with the Flori...
Building Code
Acceptance No 09-0722.12
Expiration Date 6.30.2010
By Judy Harris
Miami Dade Product Control
Division

AL-FAROOQ CORPORATION
ENGINEERS & PRODUCT DEVELOPMENT
1235 S.W. 87 AVE
MIAMI, FLORIDA 33174
TEL. (305) 264-8100 FAX. (305) 262-6978

COMP-ANL\W05-18RC

SERIES HC200 ALUMINUM CASEMENT WDW. (S.M.I.)

R.C. ALUMINUM INDUSTRIES INC.
2805 N.W. 75 TH AVE.
MIAMI, FL. 33122
TEL. (305) 592-1515 FAX. (305) 592-2184

revisions:

no	date	by	description
A	06.15.07		UPDATED FOR 2004 FBC
B	01.24.08		REV. PER BCCO COMMENTS
C	06.23.09		UPDATED FOR 2007 FBC

date: 04-08-05
scale: 1/2" = 1"
dr. by: HAMID
chk. by:

drawing no.
W05-18

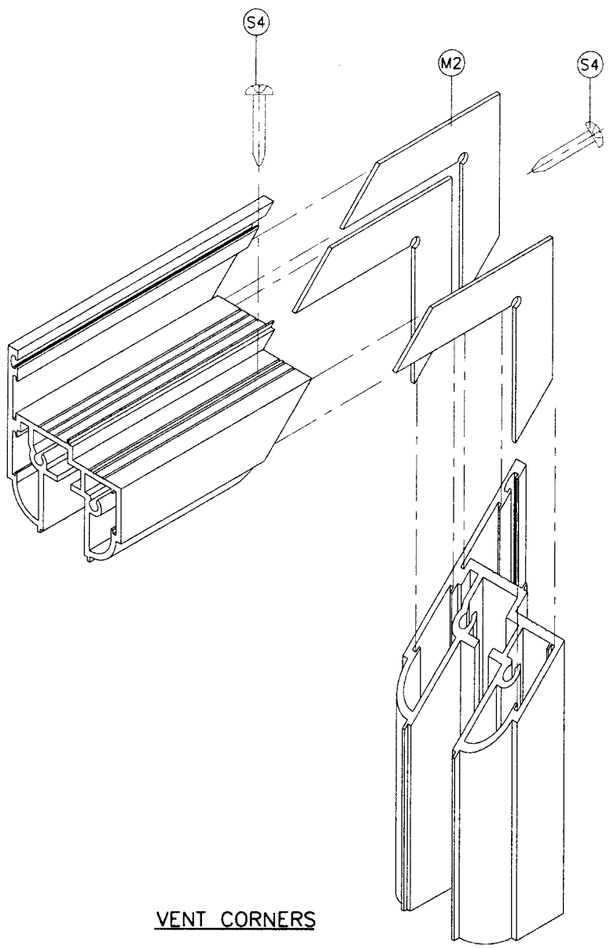

VENT CORNERS

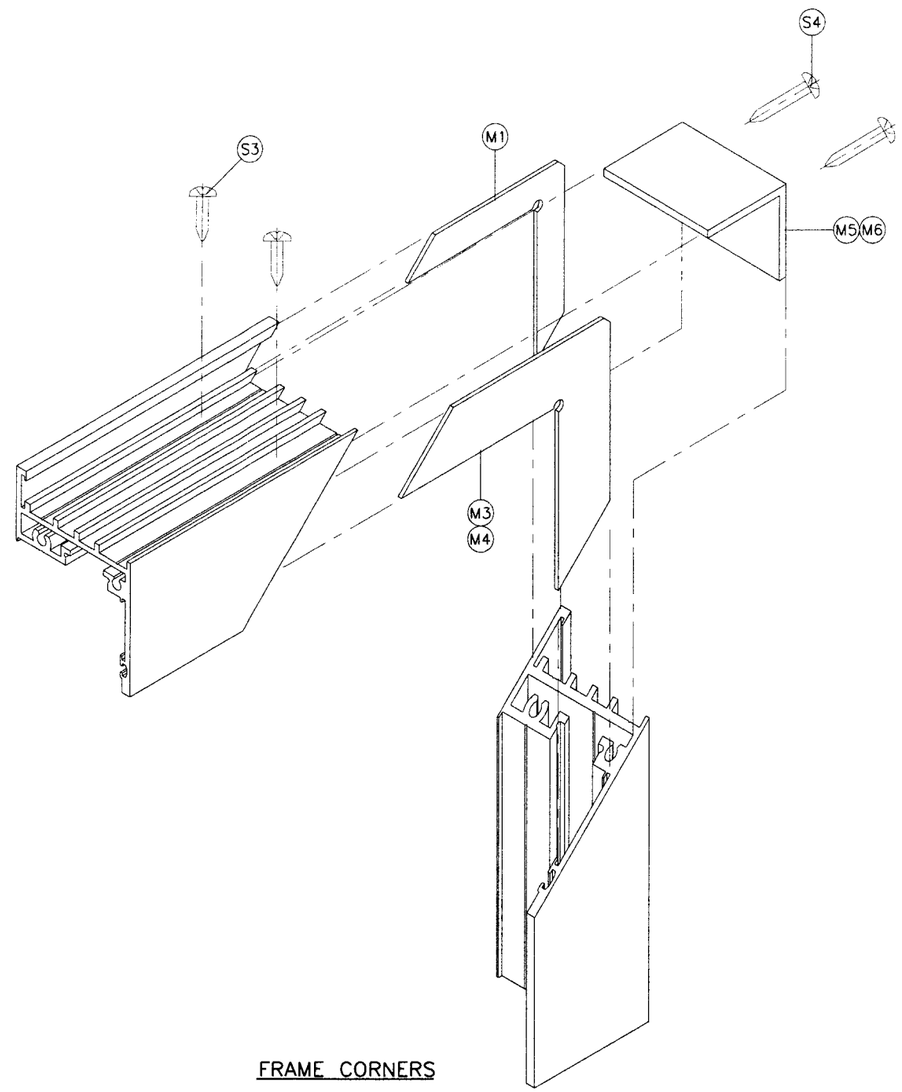

FRAME CORNERS

Engr: ARSHAD VIQAR
CIVIL.
FLA. PE # 38863
C.A.N. 3538

JUN 26 2009

PRODUCT REVISED
as complying with the Florida
Building Code
Acceptance No 09-0722.12
Expiration Date 6.30.2012
By
Miami Dade Product Control
Division

AL-FAROOQ CORPORATION
ENGINEERS & PRODUCT DEVELOPMENT
1235 S.W. 87 AVE
MIAMI, FLORIDA 33174
TEL. (305) 264-8100 FAX. (305) 262-6978
COMP-ANL\W05-18RC

SERIES HC200 ALUMINUM CASEMENT WDW. (S.M.I.)

R.C. ALUMINUM INDUSTRIES INC.
2805 N.W. 75 TH AVE.
MIAMI, FL. 33122
TEL. (305) 592-1515 FAX. (305) 592-2184

revisions:

no	date	by	description
A	06.15.07		UPDATED FOR 2004 FBC
B	01.24.08		NO CHANGE THIS SHEET
C	06.23.09		UPDATED FOR 2007 FBC

date: 04-08-05
scale: 1/2" = 1"
dr. by: HAMID
chk. by:

drawing no.
W05-18

sheet 5 of 5